Canon

PUB. DIM-1104-000C

XF200
XF205

HD Camcorder
Instruction manual

Caméscope HD
Manuel d'instruction

Videocámera HD
Manual de Instrucciones

English
Français
Español

MXF MP4 HDMI Wi Fi CERTIFIED

NTSC

Important Usage Instructions

WARNING
TO REDUCE THE RISK OF FIRE OR ELECTRIC SHOCK, DO NOT EXPOSE THIS PRODUCT TO RAIN OR MOISTURE.

WARNING
TO REDUCE THE RISK OF ELECTRIC SHOCK AND TO REDUCE ANNOYING INTERFERENCE, USE THE RECOMMENDED ACCESSORIES ONLY.

COPYRIGHT WARNING:
Unauthorized recording of copyrighted materials may infringe on the rights of copyright owners and be contrary to copyright laws.

The Mains plug is used as the disconnect device. The Mains plug shall remain readily operable to disconnect the plug in case of an accident.

CAUTION:
- Danger of explosion if the wrong type of batteries are attached. Use only the same type of batteries.
- Do not expose batteries or product to excessive heat such as the inside of a car under direct sunlight, fire, etc.

CA-930 identification plate is located on the bottom.

CAUTION:
TO REDUCE THE RISK OF ELECTRIC SHOCK, DO NOT REMOVE COVER (OR BACK). NO USER-SERVICEABLE PARTS INSIDE. REFER SERVICING TO QUALIFIED SERVICE PERSONNEL.

The lightning flash with arrowhead symbol, within an equilateral triangle, is intended to alert the user to the presence of uninsulated “dangerous voltage” within the product’s enclosure, that may be of sufficient magnitude to constitute a risk of electric shock to persons.

The exclamation point, within an equilateral triangle, is intended to alert the user to the presence of important operating and maintenance (servicing) instructions in the literature accompanying the product.

FCC NOTICE
HD Camcorder, XF200 / XF205 Systems.
This device complies with Part 15 of the FCC Rules. Operation is subject to the following two conditions: (1) This device may not cause harmful interference, and (2) this device must accept any interference received, including interference that may cause undesired operation.

Note: This equipment has been tested and found to comply with the limits for class B digital device, pursuant to Part 15 of the FCC Rules. These limits are designed to provide reasonable protection against harmful interference in a residential installation. This equipment generates, uses and can radiate radio frequency energy and, if not installed and used in accordance with the instructions, may cause harmful interference to radio communications. However, there is no guarantee that interference will not occur in a particular installation. If this equipment does cause harmful interference to radio or television reception, which can be determined by turning the equipment off and on, the user is encouraged to try to correct the interference by one or more of the following measures:

- Reorient or relocate the receiving antenna.
- Increase the separation between the equipment and receiver.
- Connect the equipment into an outlet on a circuit different from that to which the receiver is connected.
- Consult the dealer or an experienced radio/TV technician for help.

Use of shielded cable is required to comply with class B limits in Subpart B of Part 15 of FCC Rules.
Do not make any changes or modifications to the equipment unless otherwise specified in the manual.
If such changes or modifications should be made, you could be required to stop operation of the equipment.

Model ID0038 (including WLAN Module Model RF400, FCC ID: AZD400)
This device complies with Industry Canada license-exempt RSS standard(s). Operation is subject to the following two conditions: (1) this device may not cause interference, and (2) this device must accept any interference, including interference that may cause undesired operation of the device.
This transmitter must not be co-located or operated in conjunction with any other antenna or transmitter.
The available scientific evidence does not show that any health problems are associated with using low power wireless devices. There is no proof, however, that these low power wireless devices are absolutely safe. Low power wireless devices emit low levels of radio frequency energy (RF) in the microwave range while being used. Whereas high levels of RF can produce health effects (by heating tissue), exposure of low-level RF that does not produce heating effects causes no known adverse health effects. Many studies of low-level RF exposures have not found any biological effects. Some studies have suggested that some biological effects might occur, but such findings have not been confirmed by additional research. This model has been tested and found to comply with FCC/IC radiation exposure limits set forth for an uncontrolled equipment and meets the FCC radio frequency (RF) Exposure Guidelines and RSS-102 of the IC radio frequency (RF) Exposure rules.
Compliance with FCC requirement 15.407(c) Data transmission is always initiated by software, which is the passed down through the MAC, through the digital and analog baseband, and finally to the RF chip. Several special packets are initiated by the MAC. These are the only ways the digital baseband portion will turn on the RF transmitter, which it then turns off at the end of the packet. Therefore, the transmitter will be on only while one of the aforementioned packets is being transmitted. In other words, this device automatically discontinues transmission in case of either absence of information to transmit or operational failure.

Frequency Tolerance: 25 ppm

Canon U.S.A., Inc.
One Canon Park, Melville, NY 11747, USA
Tel No. 1-800-OK-CANON (1-800-652-2666)

Important Safety Instructions

In these safety instructions the word “apparatus” refers to the Canon HD Camcorder XF200 / XF205 and all its accessories.

1. Read these instructions.
2. Keep these instructions.
3. Heed all warnings.
4. Follow all instructions.
5. Do not use this apparatus near water.
6. Clean only with dry cloth.
7. Do not install near any heat sources such as radiators, heat registers, stoves, or other apparatus (including amplifiers) that produce heat.
8. Do not defeat the safety purpose of the polarized or grounding-type plug. A polarized plug has two blades with one wider than the other.
   A grounding type plug has two blades and a third grounding prong. The wide blade or the third prong are provided for your safety. If the provided plug does not fit into your outlet, consult an electrician for replacement of the obsolete outlet.
9. Protect the power cord from being walked on or pinched particularly at plugs, convenience receptacles, and the point where they exit from the apparatus.
10. Only use attachments/accessories specified by the manufacturer.
11. Unplug this apparatus during lightning storms or when unused for long periods of time.
12. Refer all servicing to qualified service personnel. Servicing is required when the apparatus has been damaged in any way, such as power-supply cord or plug is damaged, liquid has been spilled or objects have fallen into the apparatus, the apparatus has been exposed to rain or moisture, does not operate normally, or has been dropped.

CAN ICES-3(B)/NMB-3(B)

REGIONS OF USE

XF200 / XF205 are in compliance (as of June 2014) with the radio signal regulations of the regions listed below. For details on other regions where they can be used, make inquiries with the contacts listed on the back cover of this instruction manual.

REGIONS
Canada, Hong Kong S.A.R., South Korea, Taiwan, USA

Model ID0038: XF200 / XF205

Trademark Acknowledgements

- SD, SDHC and SDXC Logos are trademarks of SD-3C, LLC.
- CompactFlash is a trademark of SanDisk Corporation.
- The CF Logo is a trademark of CompactFlash Association.
- Microsoft and Windows are trademarks or registered trademarks of Microsoft Corporation in the United States and/or other countries.
- Apple, App Store, Mac OS, Final Cut Pro are trademarks of Apple Inc., registered in the U.S. and other countries.
- IOS is a trademark or registered trademark of Cisco in the U.S. and other countries and is used under license.
- Google, Android, Google Play, are trademarks of Google Inc.
- Avid, Media Composer and NewsCutter are trademarks or registered trademarks of Avid Technology, Inc. or its subsidiaries in the United States and/or other countries.
- Wi-Fi is a registered trademark of the Wi-Fi Alliance.
- Wi-Fi Certified, WPA, WPA2, and the Wi-Fi Certified logo are trademarks of the Wi-Fi Alliance.
- WPS as used on the camcorder's settings, onscreen displays and in this manual signifies Wi-Fi Protected Setup.
- The Wi-Fi Protected Setup Identifier Mark is a mark of the Wi-Fi Alliance.
- JavaScript is a trademark or registered trademark of Oracle Corporation, its affiliates or subsidiaries in the United States and other countries.
- HDMI, the HDMI logo and High-Definition Multimedia Interface are trademarks or registered trademarks of HDMI Licensing LLC in the United States and other countries.
- Other names and products not mentioned above may be trademarks or registered trademarks of their respective companies.
- This device incorporates exFAT technology licensed from Microsoft.
- ANY USE OF THIS PRODUCT OTHER THAN CONSUMER PERSONAL USE IN ANY MANNER THAT COMPLIES WITH THE MPEG-2 STANDARD FOR ENCODING VIDEO INFORMATION FOR PACKAGED MEDIA IS EXPRESSLY PROHIBITED WITHOUT A LICENSE UNDER APPLICABLE PATENTS IN THE MPEG-2 PATENT PORTFOLIO, WHICH LICENSE IS AVAILABLE FROM MPEG LA, L.L.C., 250 STEELE STREET, SUITE 300, DENVER, COLORADO 80206.
- This product is licensed under AT&T patents for the MPEG-4 standard and may be used for encoding MPEG-4 compliant video and/or decoding MPEG-4 compliant video that was encoded only (1) for a personal and noncommercial purpose or (2) by a video provider licensed under the AT&T patents to provide MPEG-4 compliant video. No license is granted or implied for any other use for MPEG-4 standard.

Highlights of the XF200 / XF205

The Canon HD Camcorder XF200 / XF205 is a compact-sized and highly portable camcorder that offers superior video quality. The camcorder features a 1/2.84-in. CMOS sensor and allows you to record in two formats (MXF on CF cards or MP4 on SD cards). The following are some of the many features that will help you turn your creative vision into reality.

HD Recording

1/2.84-in. CMOS sensor and DIGIC DV 4 image processor

The HD CMOS PRO sensor can capture video at an effective pixel count of 2,910,000 pixels. Combined with the advanced DIGIC DV 4 image processor and the 20x wide-angle lens, it can deliver a center resolution of 900 TV lines. Furthermore, thanks to Canon's high-sensitivity and noise reduction technologies, you can get excellent video quality with minimal noise even when recording in low-light situations.

MXF and MP4 formats

You can choose the movie format according to your workflow needs. You can record in MXF format using the MPEG-2 Long GOP codec, in MP4 format using the MPEG-4 AVC/H.264 codec, or in both formats simultaneously. MXF clips are recorded as Material eXchange Format (MXF files), compatible with all major non-linear (NLE) editing software.

Flexible video and audio configuration

For MXF clips, the camcorder offers 3 resolution sizes (1920x1080, 1440x1080 or 1280x720), 4 frame rate options and 3 bit rate options for a total of 16 video configurations (📖 55). Audio is recorded as linear PCM audio using 2 or 4 channels (📖 98).
For MP4 clips, the camcorder offers 3 resolution sizes (1920x1080, 1280x720 or 640x360), 3 frame rate options and 5 bit rate options for a total of 8 possible video configurations (📖 55).

Operability and Adaptability

Freely customizable compact design

The camcorder offers maximum operability for a single camera operator. It features 3 separate rings for independent focus, zoom and iris operation. The camcorder's side grip can be easily adjusted up to 120 degrees to let you use whatever camera angle you need (📖 35). Additionally, gain, shutter and iris controls can be adjusted manually or automatically giving you the freedom to decide to what extent you want to control every aspect of the image.

Improved displays

The camcorder features a 3.5-in. OLED display (equivalent to 1,230,000 dots) that excels in color reproduction, contrast and responsiveness and is easy to use even in bright outdoors. The viewfinder, on the other hand, offers a high-resolution LCD screen (also equivalent to 1,230,000 dots) with a wide angle of view of approx. 28.2°. The viewfinder can be tilted 68° vertically to ensure a comfortable fit in various shooting conditions.

Recording media

The camcorder records MXF clips to CF cards and MP4 clips to SD cards. It features two CF card slots that you can use to record continuously, one after the other, using relay recording (📖 42), or simultaneously using double slot recording (📖 42). You can even record MP4 clips to the SD card while recording an MXF clip on one or both CF cards (📖 123).

Work with major NLE software

The **Canon XF Utility** software and various XF plugins are available as free downloads from your local Canon Web site. **Canon XF Utility** allows you to easily save, manage and play back your MXF clips, while the XF plugins let you smoothly link them to major NLE software* to continue your editing workflow. For details, refer to *Saving MXF Clips* (📖 168).
The supplied software **Data Import Utility** allows you to save MP4 clips to a computer and even join split MP4 files into a single file for editing. For details, refer to *Saving MP4 Clips* (📖 170).

* Refer to *Saving Clips to a Computer* (📖 168) for details on compatible software.

Pro-level remote operation

The camcorder can be used with the optional RC-V100 Remote Controller for remote operation of many advanced functions, including iris, gain and even custom picture settings.

Versatile Artistic Expression

Special recording modes

The special recording modes (📖 118) give you more creative control over your recordings. You can create a slow motion or fast motion effect in your recordings, record a certain number of frames at a set interval (ideal for nature shots and other subjects with little movement) or record a certain number of frames every time you press a button (ideal for stop motion animation).

Custom picture settings

With custom picture settings (📖 132), you can enjoy unparalleled image control to deliver the "look" you want by adjusting parameters, such as gamma and sharpness.

Advanced Professional Features and Flexibility

Wired and Wi-Fi network functions (📖 173)

You can connect the camcorder to other devices via wired (Ethernet) connection or Wi-Fi to enjoy a variety of functions. For example, you can transfer recordings to an FTP server or use the Web browser on a connected device to remotely operate the camcorder (Browser Remote) or to play back the recordings on the camcorder (Playback via Browser).

XF205 Pro-level connectivity

The camcorder offers two terminals for professional level connectivity. Use the 3G/HD-SDI terminal to output the uncompressed HD video signal along with embedded audio and SMPTE time code (LTC) in a format that can be used for external recording. Meanwhile, the MON. terminal offers the best video output for an external monitor, including the option to overlay the camcorder's onscreen displays. Genlock synchronization (📖 94), the TIME CODE terminal (📖 95, 96) and GENLOCK/SYNC OUT terminal allow the camcorder to be part of any multi-camera shooting setup.

Infrared recording

Record in darkness using infrared recording (📖 126). With the built-in infrared light, you can record nocturnal animals in their natural environment or other such scenes.

Customization

The camcorder features several customization options. You can assign often-used functions to assignable buttons (📖 129) so that you can call up those functions with the press of a single button. You can also register frequently-used menu settings in an easy-to-access personal menu (My Menu, 📖 30). Custom functions (📖 141) and custom onscreen displays (📖 142) give you even more freedom to control many aspects of the camcorder's operation. Save custom picture and menu settings to an SD card so that you can transfer your setting preferences to other XF200 / XF205 camcorders in order to use them in the same way.

Other Functions

- Direct setting mode (📖 57)
  Change main camera functions while checking the image on the screen using only the joystick.
- Assistance functions
  Peaking and magnification (📖 84) can be helpful when you use manual focus, onscreen markers (📖 88) can be very useful to help you frame your video, and zebra patterns (📖 89) can give you a reference point to avoid overexposures.
- Video scopes (📖 108)
  Check the brightness of the image using the waveform monitor, the color of the image using the vectorscope, or the focus using the edge monitor.
- Intelligent System
  When using battery packs compatible with Intelligent System, the camcorder will display an estimate, in minutes, of the remaining recording/playback time using the battery pack (📖 25). You can also check the battery life indicator and other information on the [Battery/Hour Meter] status screen (📖 213).
- Multiple audio recording options (📖 98)
  The camcorder offers 2- or 4-channel linear PCM audio recording for MXF clips and 2-channel AAC audio recording for MP4 clips. You can use the camcorder's built-in microphone, external microphones with a ∅ 3.5 mm mini-stereo plug (MIC terminal), or external audio input sources with an XLR plug (INPUT 1/INPUT 2 terminals with +48 V phantom power supply). The camcorder even has a convenient microphone holder with cable clamp for external microphones.
- Metadata and GPS information (📖 111, 114)
  You have the option to add various metadata fields to your MXF clips. Some of the information requires using **Canon XF Utility** or the Browser Remote application. Additionally, you can connect the optional GP-E2 GPS Receiver to the camcorder to automatically add GPS information to your recordings. Using **Canon XF Utility** you can then organize or search MXF clips by GPS information.

Table of Contents

1. Introduction 11

About this Manual 11
- Conventions Used in this Manual 11

Supplied Accessories 13

Names of Parts 14
- WL-D6000 Wireless Controller 21

2. Preparations 23

Preparing the Power Supply 23
- Using a Battery Pack 23
- Using a Household Power Outlet 25
- Turning the Camcorder On and Off 26

Date, Time and Language Settings 27
- Setting the Date and Time 27
- Changing the Time Zone 27
- Displaying the Date and Time while Recording 28
- Changing the Language 28

Using the Menus 29
- Selecting an Option from the Menu 29
- Using the Customized Submenu (My Menu) 30

Preparing the Camcorder 32
- Attaching the Microphone Holder Unit 32
- Attaching the Lens Hood 32
- Using the Viewfinder 32
- Using the OLED Panel 33
- Adjusting the Viewfinder/OLED Screen 34
- Adjusting the Color Balance of the OLED Screen 34
- Setting the Screen to Black & White 35
- Adjusting the Grip Unit 35
- Attaching the Shoulder Strap 36
- Removing and Attaching the Terminal Covers 36
- Using a Tripod 37

Preparing Recording Media 38
- Inserting a CF Card 39
- Checking the Status of the CF Card Slots 39
- Removing a CF card 40
- Inserting and Removing an SD Card 40
- Initializing the Recording Media 41
- Switching Between the CF Card Slots 41
- Selecting the CF Card Recording Method 42
- Checking the Available Recording Time on a Recording Media 43
- Recovering Data on a Recording Media 43

Remote Operation of the Camcorder 44
- Using the Supplied Wireless Controller 44
- Using the Optional RC-V100 Remote Controller 45

3. Recording 47

Recording Video 47
- Preparing to Record 47
- Recording 48
- Remote Operation Using Browser Remote 50
- Onscreen Displays 51
- Power Save Mode 54
- Using the Fan 54

Video Configuration: Movie Format, Bit Rate, Resolution and Frame Rate 55

Changing Main Camera Functions with the Joystick 57
- Using the Direct Setting Mode 57

Shutter Speed 58
- Automatic Shutter 59
- Manual Shutter 60
- Flicker Reduction 61

Gain 62
- Selecting the Gain Level 62
- Automatic Gain Control (AGC) 62
- Manual Gain 63

Aperture 65
- Automatic Aperture 65
- Manual Aperture 66
- ND Filter 67
- Exposure Compensation - AE Shift 67
- Light Metering Mode 68

White Balance 69
- Auto White Balance (AWB) 70
- Preset White Balance/Color Temperature 71
- Custom White Balance 72

Zooming 74
- Selecting the Zoom Mode 74
- Using the Zoom Ring 75
- Using the Zoom Rockers on the Camcorder 75
- Remote Operation 78
- Soft Zoom Control 79

Using Optional Conversion Lenses 80

Adjusting the Focus 81
Autofocus (AF) Mode 81
Manual Focus (MF) 83
Push AF 85
Detecting and Focusing On Faces 85
Focus Limit and Macro Shooting 86
Image Stabilizer 87
Onscreen Markers and Zebra Patterns 88
Displaying Onscreen Markers 88
Displaying Zebra Patterns 89
Setting the Time Code 90
Selecting the Running Mode 90
Selecting Drop or Non-Drop Frame 91
Putting the Time Code Display on Hold 91
Setting the User Bit 93
XF205 Synchronizing with an External Device 94
Connecting an External Device 94
Reference Video Signal Input (Genlock Synchronization) 94
Time Code Signal Input 95
Reference Video Signal Output 96
Time Code Signal Output 96
Recording Audio 98
Audio Settings and Recorded Audio Channels 98
Selecting the Number of Recorded Audio Channels 100
Connecting an External Microphone or External Audio Input Source to the Camcorder 100
Using the Built-in Microphone or MIC Terminal 101
Using the INPUT 1/INPUT 2 Terminals 103
Adjusting the Audio Level 105
Monitoring the Audio with Headphones 106
Colors Bars/Audio Reference Signal 107
Recording Color Bars 107
Recording an Audio Reference Signal 107
Video Scopes 108
Displaying a Video Scope 108
Configuring the Waveform Monitor 108
Configuring the Vectorscope 109
Configuring the Edge Monitor 109
Adding Marks to MXF Clips while Recording 110
Adding Shot Marks while Recording 110
Adding an OK Mark or ✓ Mark to the Last Clip Recorded 110
Using Metadata 111
Setting a User Memo Created with Canon XF Utility 111
Setting a User Memo Using Browser Remote 112
Recording GPS Information (Geotagging) 114
Reviewing a Recording 116
File Numbering 117
Special Recording Modes 118
Interval Recording Mode 118
Frame Recording Mode 119
Slow & Fast Motion Mode 120
Pre-recording Mode 121
Simultaneous Recording of MXF and MP4 Clips 123
Recording in MP4 Backup Recording Mode 124
Infrared Recording 126
Activating Infrared Mode 126
Using the Infrared Light 126
Using the Focal Length Guide 128

4. Customization 129

Assignable Buttons 129
Changing the Assigned Function 129
Using an Assignable Button 130
Custom Picture Settings 132
Selecting Custom Picture Files 132
Editing a Custom Picture File's Settings 133
Renaming Custom Picture Files 133
Protecting Custom Picture Files 133
Transferring Custom Picture Files 134
Embedding Custom Picture Settings in a Recording 135
Available Custom Picture Settings 135
Customizing Functions and Onscreen Displays 141
Customizing Functions 141
Customizing Onscreen Displays 142
Saving and Loading Camera Settings 143
Saving Camera Settings to an SD Card 143
Loading Camera Settings from an SD Card 143

5. Playback 145

Playback 145
MXF and MP4 Clip Index Screens 145
Playing Back Clips 147
Onscreen Displays 147
Playback Controls 148
Adjusting the Volume 149

Clip Operations 150
Using the Clip Menu 151
Displaying Clip Information 151
Adding OK Marks or ✓ Marks 152
Deleting OK Marks or ✓ Marks 153
Copying Clips 153
Deleting Clips 154
Deleting the User Memo and GPS Information 155
Copying a Custom Picture File Embedded in a Clip 155
Displaying an Index Screen of Shot Marks 155
Displaying a Frame Index Screen of a Single Clip 156
Adding Shot Marks 157
Deleting Shot Marks 157
Changing a Clip's Thumbnail 158

6. External Connections 159

Video Output Configuration 159
Recording Video Signal Configuration and Video Output Configuration by Terminal 159
Playback Video Configuration and Video Output Configuration by Terminal 160
Connecting to an External Monitor 162
Connection Diagram 162
XF205 Using the 3G/HD-SDI Terminal 163
XF205 Using the MON. Terminal 163
Using the HDMI OUT Terminal 164
Using the AV OUT Terminal 164
SD Output 165
Superimposing Onscreen Displays to Appear on an External Monitor 165
Audio Output 166
Selecting the Audio Channel 166
Synchronizing the Video with the Audio being Monitored 167
Selecting the Output Level of the AV OUT Terminal 167
Saving Clips to a Computer 168
Saving MXF Clips 168
Saving MP4 Clips 170
Connecting the Camcorder to a Computer 171

7. Network Functions 173

About the Network Functions 173
Connecting to a Wi-Fi Network 174
Wi-Fi Protected Setup (WPS) 174
Searching for Access Points 175
Manual Setup 177
Camera Access Point 177
Configuring the IP Address Settings 178
Saving the Configuration 178
Connecting to a Wired (Ethernet) Network 179
Selecting a Network Connection 180
Changing Network Settings 181
Browser Remote: Controlling the Camcorder from a Network Device 182
Setting Up Browser Remote 182
Starting Browser Remote 183
Real-Time Proxy Transfer 188
FTP File Transfer 189
Preparations 189
FTP Transfer in CAMERA Mode 190
FTP Transfer in MEDIA Mode 191
Playback via Browser 193

8. Photos 195

Taking Photos 195
Taking Photos in CAMERA Mode 195
Capturing Photos in MEDIA Mode 195
Photo Playback 197
Displaying the [Photos] Index Screen 197
Viewing Photos 197
Deleting Photos 198

9. Additional Information 199

Menu Options 199
Displaying the Status Screens 209
Troubleshooting 218
List of Messages 223
Handling Precautions 228
Maintenance/Others 231
Optional Accessories 232
Specifications 235
Index 241

1 Introduction

About this Manual

Thank you for purchasing the Canon XF200 / XF205. Please read this manual carefully before you use the camcorder and retain it for future reference. Should the camcorder fail to operate correctly, refer to *Troubleshooting* (📖 218).

Conventions Used in this Manual

- ❗ IMPORTANT: Precautions related to the camcorder's operation.
- ⓘ NOTES: Additional topics that complement the basic operating procedures.
- 📖: Reference page number.
- XF205: Text that applies only to the model shown in the icon.
- The following terms are used in this manual.

  "Screen" refers to the OLED screen and the viewfinder screen.

  "CF card" refers to a CompactFlash (CF) card.

  "SD card" refers to an SD, SDHC or SDXC memory card.

  "Recording media" refers to CF cards and SD cards.

  When not specified, "access lamps" refers to either or both of the CF card access lamps (CF A/CF B) and the SD card access lamp.

  "Press SET" refers to pressing down the joystick itself (📖 29).
- Photographs in the manual are simulated pictures taken with a still camera. Some screenshots have been altered to make them easier to read.
- Illustrations in the manual show the XF205.

The arrow ❯ is used to abbreviate menu selections. For a detailed explanation on how to use the menus, refer to *Using the Menus* (📖 29). For a concise summary of all available menu options and settings, refer to the appendix *Menu Options* (📖 199).

Operating modes and Format
A full icon (like CAMERA) indicates that the function described can be used in the operating mode shown or for recordings made in the movie format shown in the icon; an empty icon (like MEDIA) indicates that the function cannot be used. For details refer to *Turning the Camcorder On and Off* (📖 26) or *Selecting the Movie Format* (📖 55).

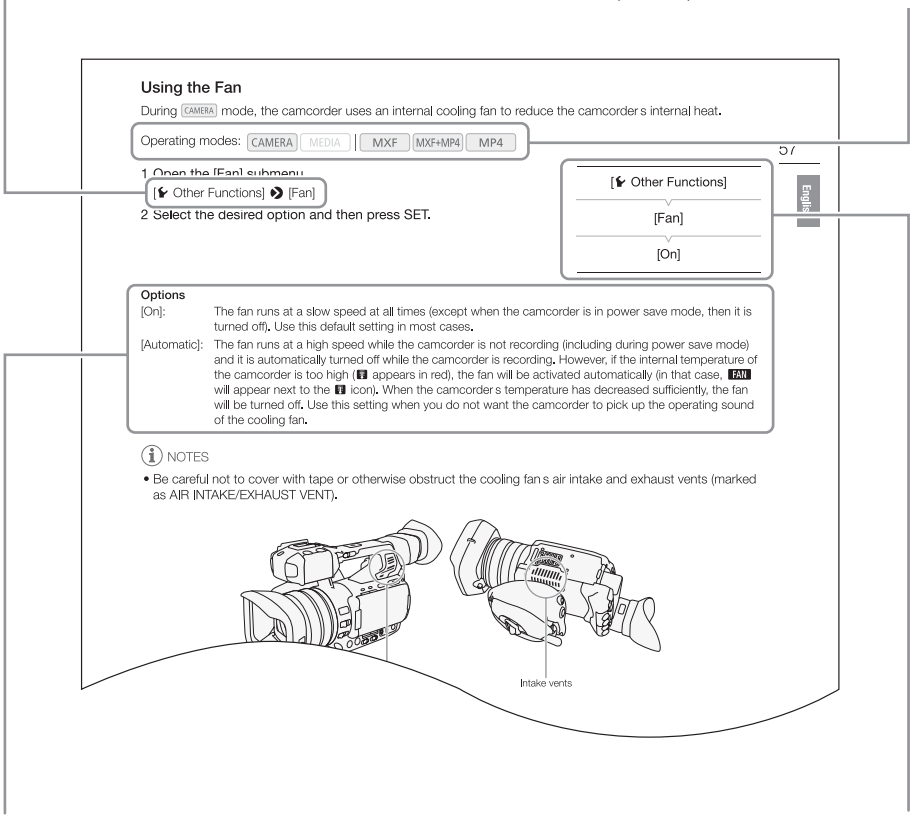

When a procedure requires selecting an option, the available options are listed within or after the procedure. Brackets [ ] are used to refer to menu options as they are displayed on screen.

When a function requires the use of the menu, the quick reference shows the submenus and, when applicable, the default setting for the menu item. The example illustration indicates that you can find the function by selecting the [Other Functions] menu and then the [Fan] menu item.

Supplied Accessories

The following accessories are supplied with the camcorder.

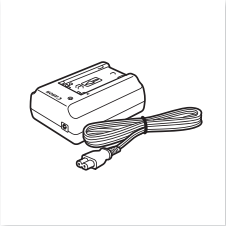

CA-930 Compact Power Adapter
(incl. power cord)

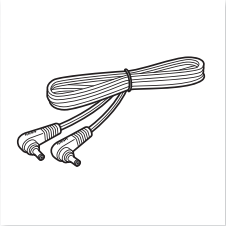

DC-930 DC Cable

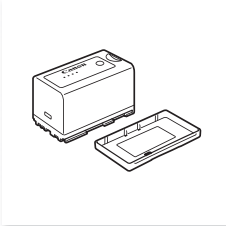

BP-955 Battery Pack
(incl. terminal cover)

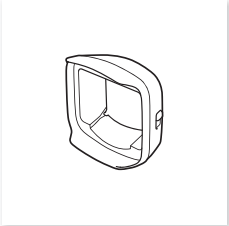

Lens Hood with Lens Barrier

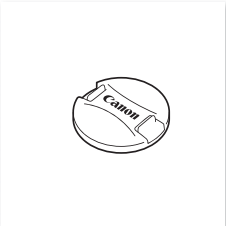

Lens Cap

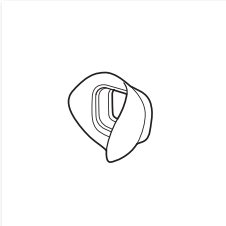

Eye cup

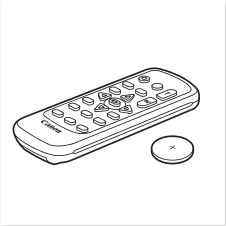

WL-D6000 Wireless Controller
(incl. CR2025 Lithium Battery)

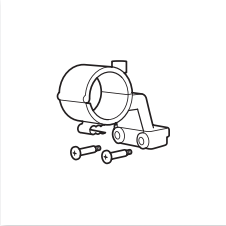

Microphone Holder Unit

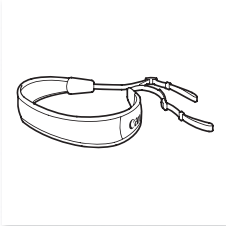

SS-1200 Shoulder Strap

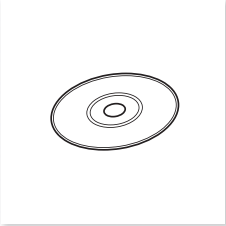

Data Import Utility
Software CD-ROM*

* The Data Import Utility Software Guide (PDF file) is included in the CD-ROM. For details about the software, refer to this Software Guide.

Names of Parts

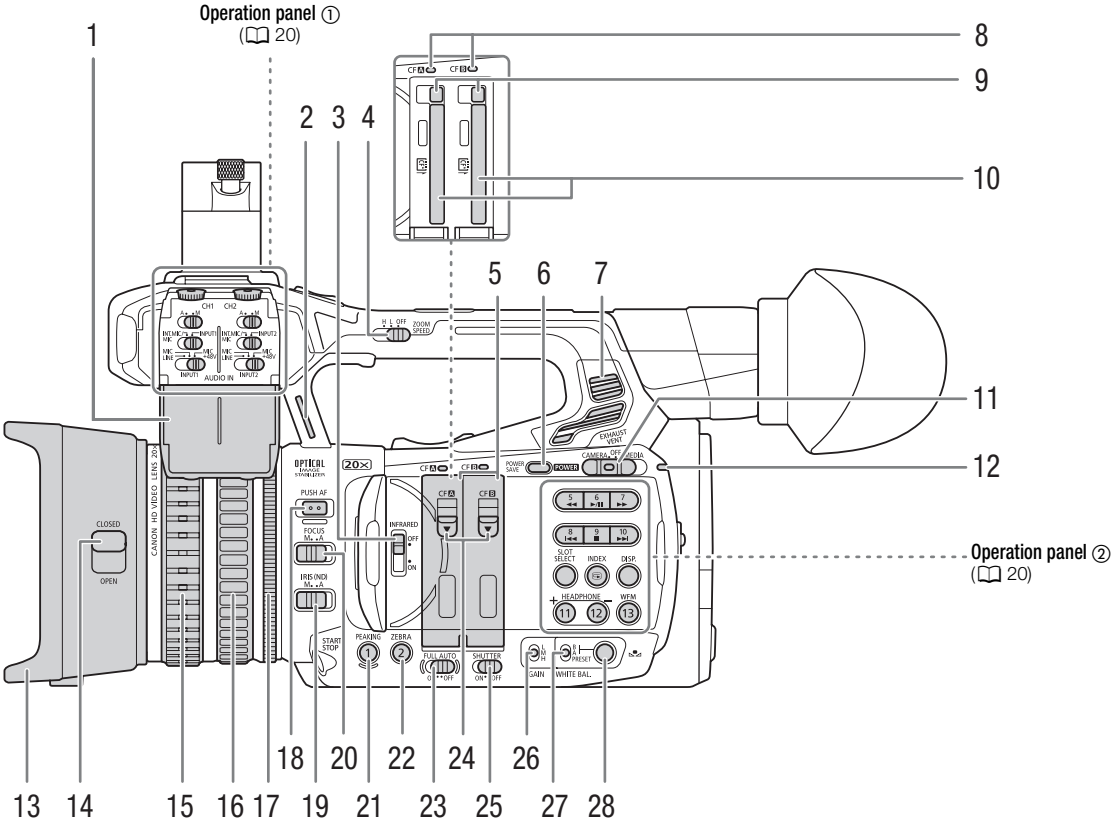

1 Protective cover for audio controls (98)
2 Strap mount (36)
3 INFRARED switch (126)
4 ZOOM SPEED (zoom speed of the handle's zoom rocker) switch (75)
5 CF card slot covers for CF card slots A (left) and B (right)
6 POWER SAVE button (54)
7 Exhaust ventilation outlet (54)
8 CF A (CF card slot A) and CF B (CF card slot B) access indicators (39)
9 CF card release buttons for CF card slots A (left) and B (right) (40)
10 CF card slots A (left) and B (right) (39)
11 POWER switch (26)
12 Power indicator (26)
13 Lens hood (32)
14 Lens barrier switch (47)
15 Focus ring (83)
16 Zoom ring (75)
17 Iris ring (66)
18 PUSH AF (momentary autofocus) button (85)
19 IRIS (ND) (aperture mode/ND filter) switch (65)
20 FOCUS (focus mode) switch (81, 83)
21 PEAKING button (84) / Assignable button 1 (129)
22 ZEBRA button (89)/ Assignable button 2 (129)
23 FULL AUTO switch (49)
24 CF card slot cover switches for CF card slots A (left) and B (right) (39)
25 SHUTTER switch (58)
26 GAIN switch (62)
27 WHITE BAL. (white balance) switch (69)
28 (white balance adjustment) button (72)

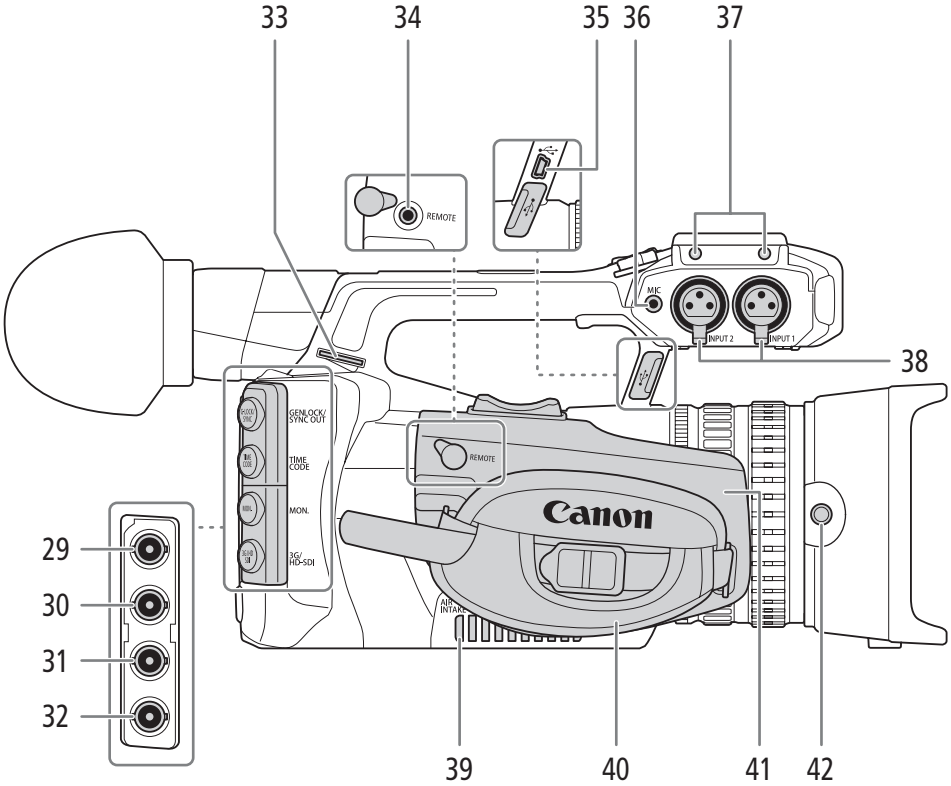

29 XF205 GENLOCK/SYNC OUT (synchronization) terminal (📖 94, 96)
30 XF205 TIME CODE terminal (📖 95, 96)
31 XF205 MON. (monitor output) terminal (📖 162, 163)
32 XF205 3G/HD-SDI terminal (📖 162, 163)
33 Strap mount (📖 36)
34 REMOTE terminal (📖 45)
For connecting the optional RC-V100 Remote Controller or commercially available remote controllers.
35 USB terminal (📖 171)
36 MIC (microphone) terminal (📖 101)
37 Attachment sockets for the microphone holder unit (📖 32)
38 INPUT 1 (right) and INPUT 2 (left) terminals (XLR) (📖 103)
39 Air intake vent (📖 54)
40 Grip belt (📖 35)
41 Adjustable grip unit (📖 35)
42 Lens hood lock screw (📖 32)

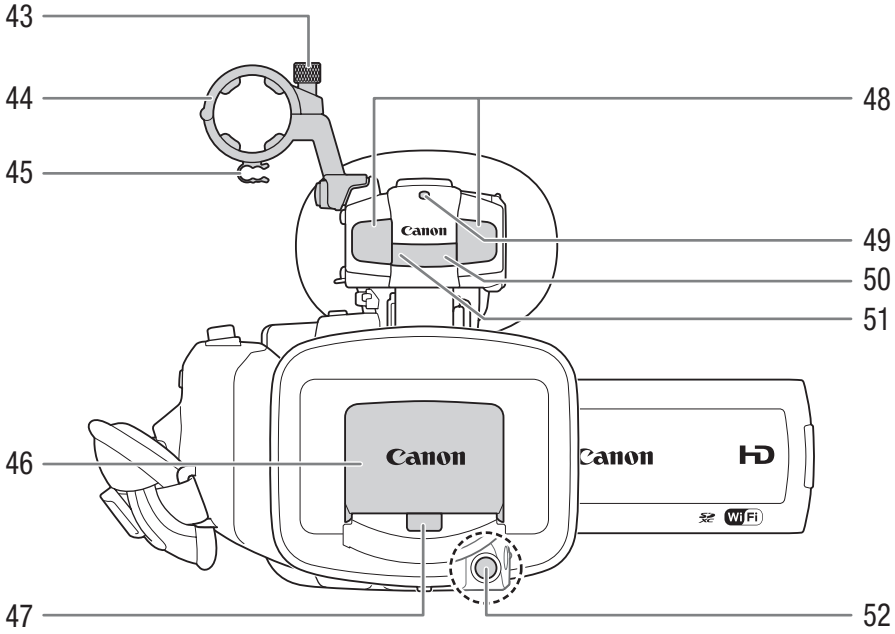

43 Microphone lock screw (📖 100)
44 Microphone holder (📖 100)
45 Microphone cable clamp (📖 100)
46 Lens barrier (📖 47)
47 Instant AF sensor (📖 81)
48 Built-in stereo microphone (📖 101)
49 Front tally lamp (📖 48)
50 Remote sensor (📖 44)
51 Infrared light (📖 126)
52 START/STOP button (📖 48, 123)

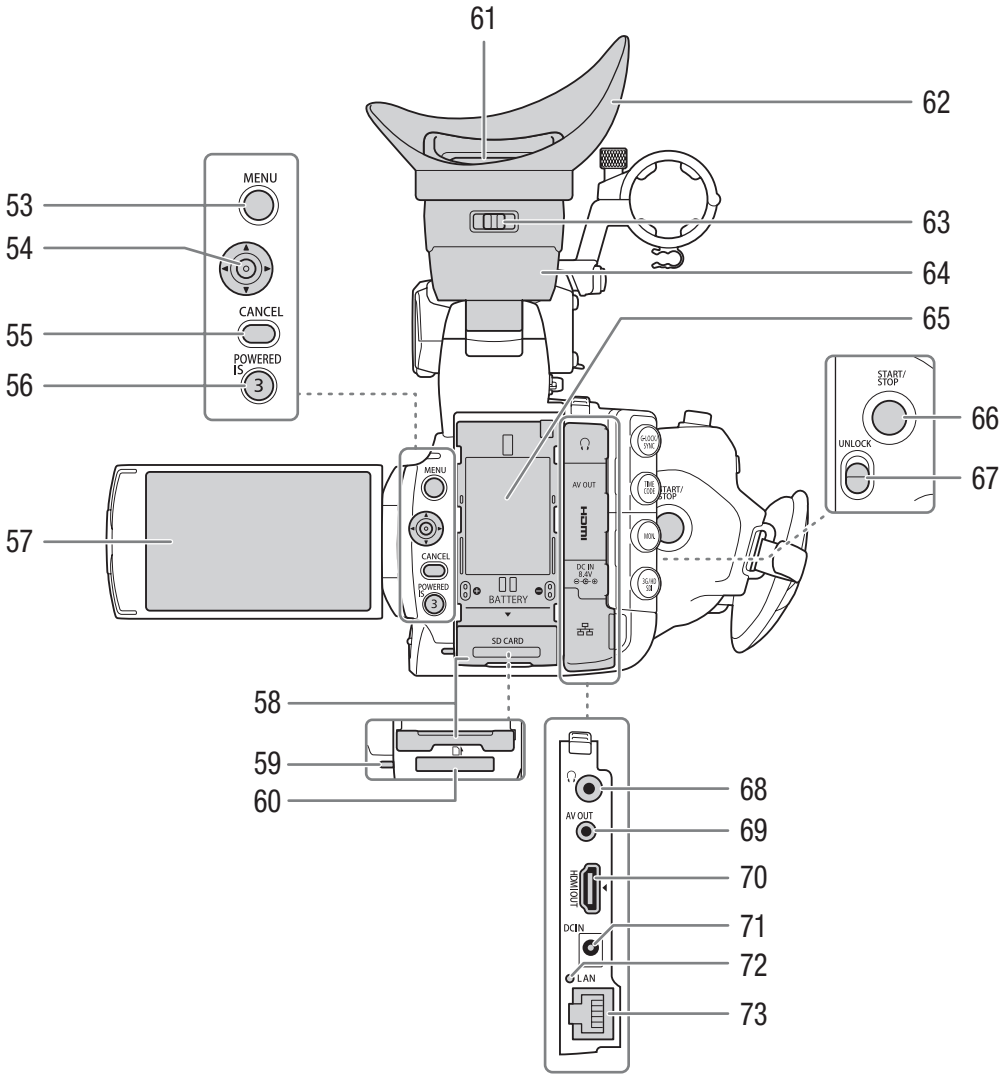

53 MENU button (📖 29)
54 Joystick (📖 29)/SET button (📖 29)
55 CANCEL button (📖 29)
56 POWERED IS button (📖 87)/
Assignable button 3 (📖 129)
57 OLED screen (📖 33, 34)
58 SD card slot cover (📖 40)
59 SD card access indicator (📖 48, 123, 195)
60 SD card slot (📖 40)
61 Viewfinder (📖 32, 34)
62 Eye cup (📖 33)
63 Dioptric adjustment lever (📖 33)
64 Viewfinder unit
65 Battery compartment (📖 24)
66 START/STOP button (📖 48, 123)
67 UNLOCK (unlock the grip) switch (📖 35)
68 🎧 (headphone) terminal (📖 106)
69 AV OUT terminal (📖 162, 164)
70 HDMI OUT terminal (📖 162, 164)
71 DC IN terminal (📖 25)
72 LAN access indicator (📖 179)
73 LAN terminal (Ethernet) (📖 179)

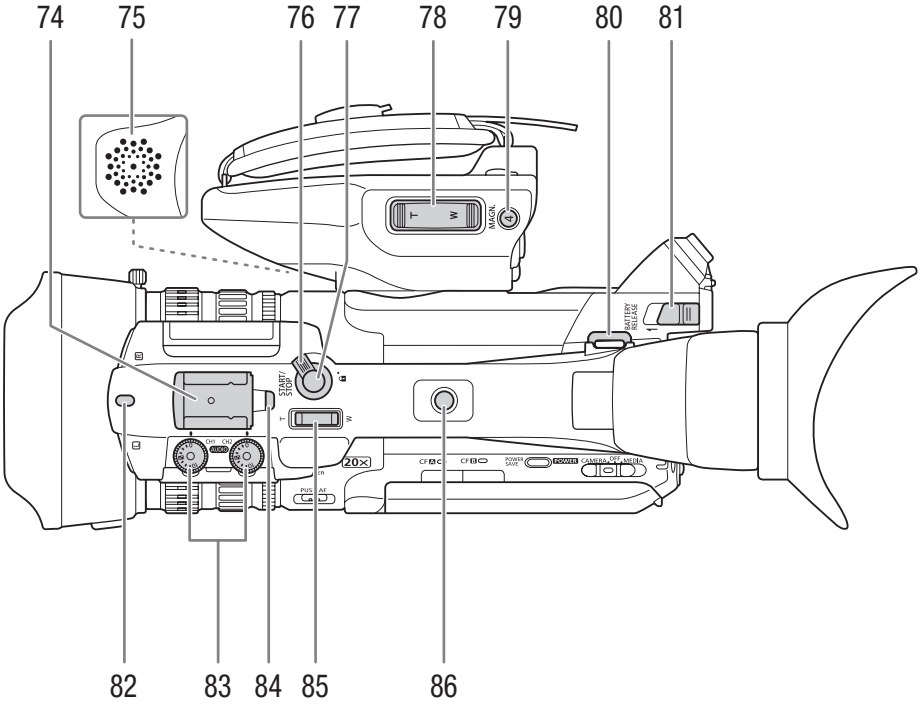

74 Accessory shoe
For attaching accessories such as the optional VL-10Li II Battery Video Light.
75 Built-in speaker (📖 149)
76 START/STOP lock lever (📖 48)
77 START/STOP button (📖 48, 123)
78 Grip zoom rocker (📖 75)
79 MAGN. (magnification) button (📖 84)/ Assignable button 4 (📖 129)
80 Strap mount (📖 36)
81 BATTERY RELEASE lever (📖 24)
82 Front tally lamp (📖 48)
83 AUDIO dials for CH1 (left) and CH2 (right) (📖 105)
84 Rear tally lamp (📖 48)
85 Handle zoom rocker (📖 77)
86 Handle socket for 1/4" screws

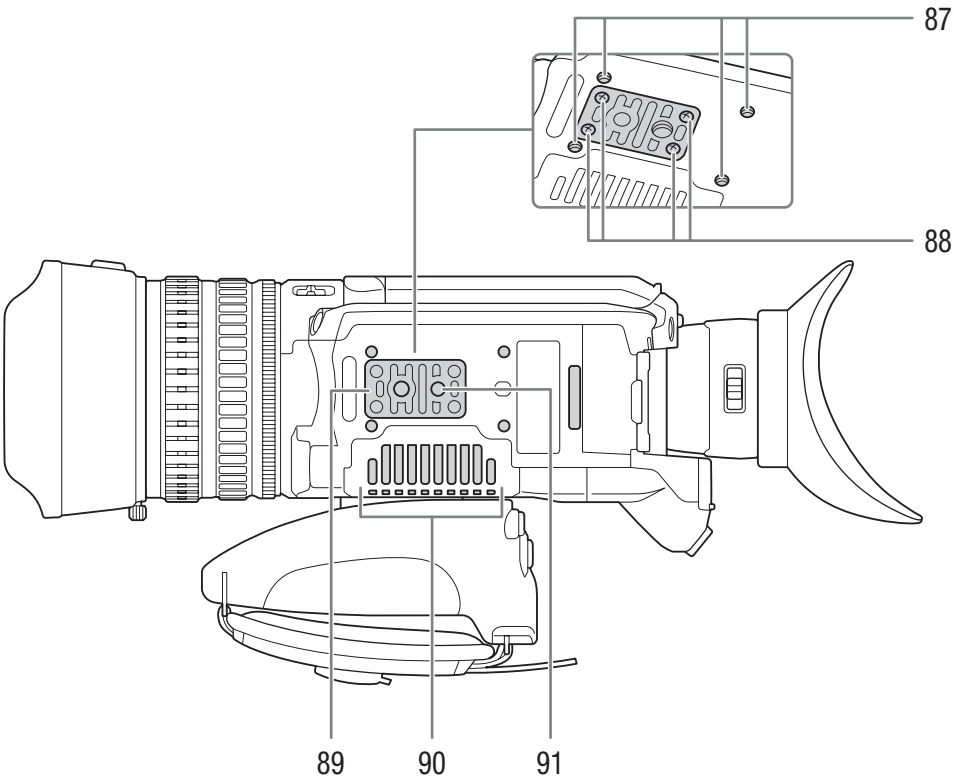

87 Attachment sockets for the optional TA-100 Tripod Adapter (📖 37)
88 Tripod base screws (📖 37)
89 Tripod base for tripods with 1/4" screws (📖 37)
90 Air intake vent (📖 54)
91 Tripod socket (📖 37)

Operation panels

Operation panel ①

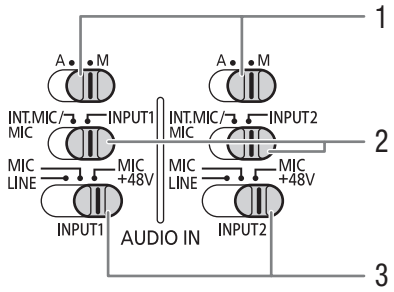

Operation panel ②

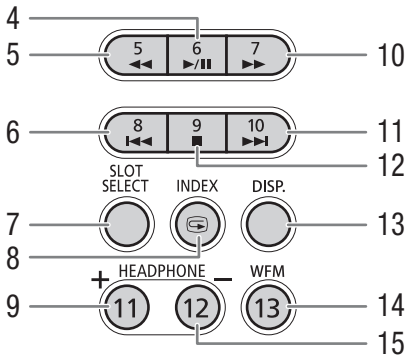

1 Audio level switches for CH1 (left) and CH2 (right) (📖 105)
2 AUDIO IN (audio input) selection switches for CH1 (left) and CH2 (right) (📖 101, 103)
3 INPUT 1 (left) / INPUT 2 (right) audio source selection switches (📖 103)
4 ►/❚❚ (play/pause) button (📖 147)/ Assignable button 6 (📖 129)
5 ◄◄ (fast reverse playback) button (📖 148)/ Assignable button 5 (📖 129)
6 ❙◄◄ (skip backward) button (📖 148)/ Assignable button 8 (📖 129)
7 SLOT SELECT (CF card slot selection) button (📖 41, 146)
8 INDEX button (📖 146)/ (review recording) button (📖 116)
9 HEADPHONE+ button (📖 149)/ Assignable button 11 (📖 129)
10 ►► (fast playback) button (📖 148)/ Assignable button 7 (📖 129)
11 ►►❙ (skip forward) button (📖 148)/ Assignable button 10 (📖 129)
12 ■ (stop) button (📖 147)/ Assignable button 9 (📖 129)
13 DISP. (display) button (📖 51, 147)
14 WFM (waveform monitor) button (📖 108)/ Assignable button 13 (📖 129)
15 HEADPHONE- button (📖 149)/ Assignable button 12 (📖 129)

WL-D6000 Wireless Controller

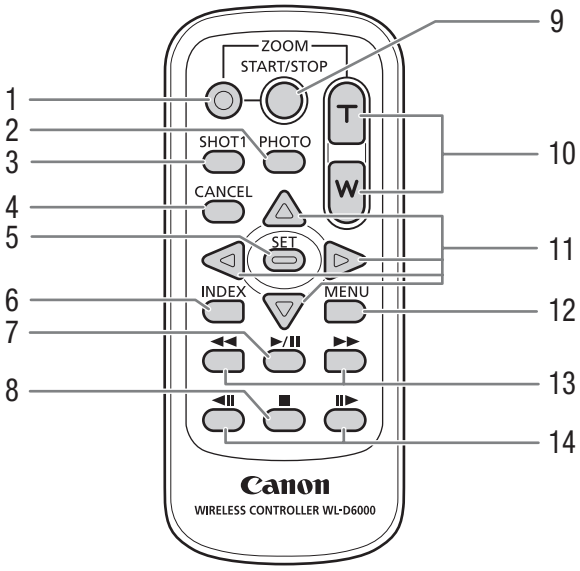

1 Record enable button: When you use the START/STOP button or ZOOM buttons, you must press this button simultaneously with the desired button.
2 PHOTO button (📖 195)
3 SHOT1 (shot mark 1) button (📖 157)
4 CANCEL button (📖 29)
5 SET button (📖 29)
6 INDEX button (📖 146)
7 ►/❚❚ (play/pause) button (📖 148)
8 ■ (stop) button (📖 148)
9 START/STOP button (📖 48, 123)
10 ZOOM buttons (📖 78)
11 ▲/▼/◄/► buttons
12 MENU button (📖 29)
13 ◄◄/►► (fast playback reverse/forward) buttons (📖 148)
14 ◄❚❚/❚❚► (frame reverse/frame forward) buttons (📖 148)

Preparing the Power Supply

You can power the camcorder using a battery pack or directly using the compact power adapter. If you connect the compact power adapter to the camcorder while a battery pack is attached, the camcorder will draw power from the power outlet.
Charge battery packs before use. For approximate charging times and recording/playback times with a fully charged battery pack, refer to *Charging Times* (📖 233) and *Recording and Playback Times* (📖 233).

Using a Battery Pack

You can power the camcorder using the supplied BP-955 or an optional BP-950G, BP-970G or BP-975 Battery Pack. The BP-955 and BP-975 are compatible with Intelligent System, meaning that you can check the remaining battery time.

Charging the Battery Pack

Charge battery packs using the supplied CA-930 Compact Power Adapter. Before charging, remove the terminal cover of the battery pack.

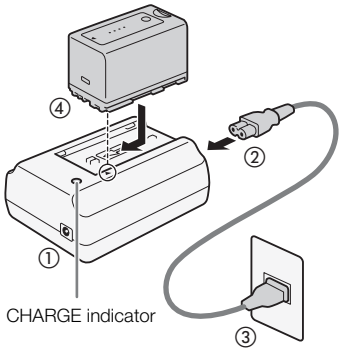

1 If the DC cable is connected to the compact power adapter, disconnect it.
   - If the DC cable is connected to the compact power adapter, charging will not start.
2 Connect the power cord to the compact power adapter.
3 Plug the power cord into a power outlet.
4 Attach the battery pack to the compact power adapter.
   - Press lightly and slide the battery pack in the direction of the arrow until it clicks.
   - The CHARGE indicator starts flashing and also indicates the battery pack's approximate charge. The indicator will stay on when charging has completed.

✳ ✳	0-34%: Flashes once per second
✳✳ ✳✳	35-69%: Flashes twice per second
✳✳✳ ✳✳✳	70-99%: Flashes 3 times per second

5 When charging has completed, remove the battery pack from the compact power adapter.
6 Unplug the power cord from the power outlet and disconnect it from the compact power adapter.

IMPORTANT

- Do not connect to the compact power adapter any product that is not expressly recommended for use with this camcorder.

NOTES

- We recommend charging the battery pack in temperatures between 10 ºC and 30 ºC (50 ºF and 86 ºF). Outside the temperature range of 0 ºC to 40 ºC (32 ºF to 104 ºF), charging will not start.
- To charge the battery pack, disconnect the DC cable from the compact power adapter.

- If there is a malfunction with the compact power adapter or battery pack, the charge indicator will go out and charging will stop.
- For handling precautions regarding the battery pack, refer to *Battery Pack* (📖 228).
- Charged battery packs continue to discharge naturally. Therefore, charge them on the day of use, or the day before, to ensure a full charge.
- Repeatedly charging and discharging the battery pack will eventually shorten its battery life. You can check the battery life on the [Battery/Hour Meter] status screen (📖 213). Fully charging the battery pack and then discharging it will give you a more accurate reading.
- We recommend that you prepare battery packs to last 2 to 3 times longer than you think you might need.

Attaching the Battery Pack

1 Set the **POWER** switch to OFF.

2 Insert the battery pack all the way into the compartment and press gently down until it clicks.

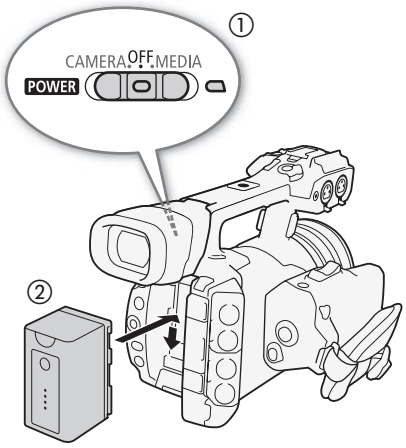

Removing the Battery Pack

1 Set the **POWER** switch to OFF.

2 Slide the BATTERY RELEASE lever in the direction of the arrow. While holding it pressed down, slide the battery pack up and remove it from the battery compartment.

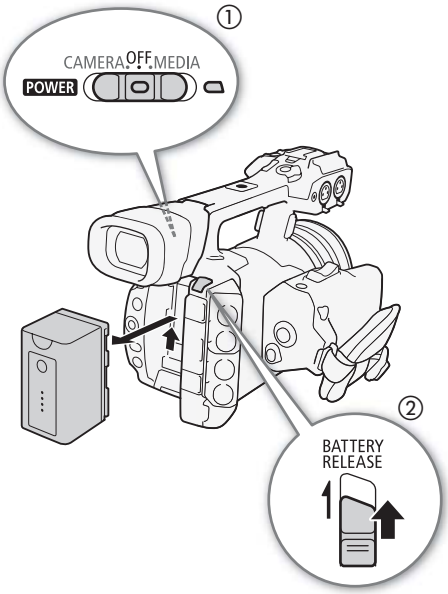

Checking the Remaining Battery Charge

With battery packs compatible with Intelligent System, you can check the estimated remaining usage time of the battery pack by looking at any recording/playback screen or the [Battery/Hour Meter] status screen (📖 213). You can also check the approximate remaining battery charge on the battery pack itself.

Press the CHECK button on the battery pack. An indicator will light for approximately 3 seconds and show the approximate remaining battery charge.

☀ ○ ○ ○	0-25%
☀ ☀ ○ ○	26-50%
☀ ☀ ☀ ○	51-75%
☀ ☀ ☀ ☀	76-100%

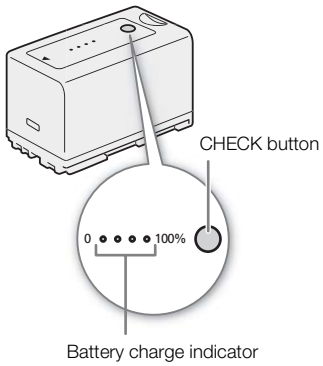

NOTES

- The first time you use a battery pack, charge it fully and then use the camcorder until the battery pack is completely exhausted. Doing so will ensure that the remaining recording time will be displayed accurately.
- **USA and Canada only:** The Lithium ion/polymer battery that powers the product is recyclable. Please call 1-800-8-BATTERY for information on how to recycle this battery.

Using a Household Power Outlet

You can also power the camcorder directly from a power outlet using the supplied CA-930 Compact Power Adapter and DC-930 DC Cable. While the camcorder is powered from a household power outlet, you can safely replace the battery pack even when the camcorder is on.

1 Set the **POWER** switch to OFF.
2 Connect the DC cable to the DC IN terminal on the camcorder.
3 Connect the power cord to the compact power adapter and plug it into a power outlet.
4 Connect the DC cable to the compact power adapter.

IMPORTANT

- Turn off the camcorder before connecting or disconnecting the compact power adapter.

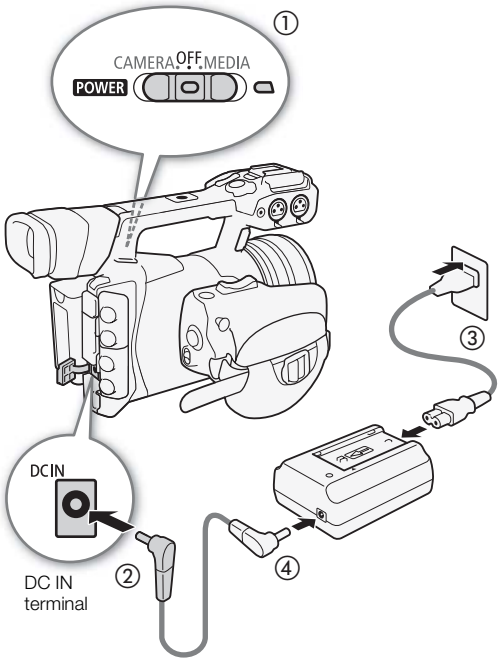

Turning the Camcorder On and Off

The camcorder has two operating modes: CAMERA (CAMERA) mode for making recordings and MEDIA (MEDIA) mode for playing back recordings. Select the operating mode using the POWER switch.

To turn on the camcorder

Hold down the button on the POWER switch and slide the switch to CAMERA for CAMERA mode or MEDIA for MEDIA mode. The power indicator will illuminate in green.

CAMERA mode

MEDIA mode

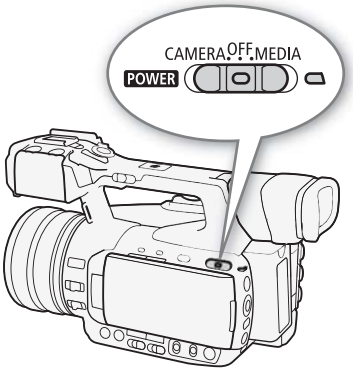

To turn off the camcorder

Set the POWER switch to OFF. The power indicator will turn off.

NOTES

- If you set the [Other Functions] [POWER LED] setting to [Off], the power indicator will not illuminate.

Date, Time and Language Settings

Setting the Date and Time

You will need to set the date and time of the camcorder before you can start using it. When the camcorder's clock is not set, the [Date/Time] screen will appear automatically with the month selected.

Operating modes: CAMERA MEDIA | MXF MXF+MP4 MP4

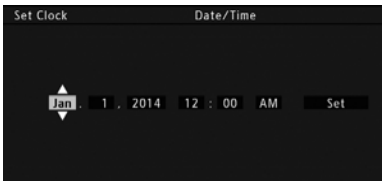

1 Push the joystick up/down to change the month then move (▶) to the next field.
- To move to the next field you can also press the joystick itself.

2 Change the rest of the fields in the same way.

3 Select (▶) [Set] and then press the joystick to start the clock and close the screen.

NOTES
- You can change the date format and the clock format (12/24 hours) with the [Other Functions] [Set Clock] [Date Format] setting. You can also change the date and time later on (not during the initial setup) with the [Other Functions] [Set Clock] [Date/Time] setting. However, while the camcorder is being operated through the Browser Remote application, the [Set Clock] submenu is not available.
- When the built-in rechargeable lithium battery is exhausted, the date and time setting may be lost. In such case, recharge the built-in lithium battery (230) and set the time zone, date and time again.
- Using the optional GP-E2 GPS Receiver, you can have the camcorder adjust settings automatically according to the UTC date/time information received from the GPS signal (114).

Changing the Time Zone

Change the time zone to match the time zone of your location. The default setting is [UTC-05:00 New York]. The time zones are based on Coordinated Universal Time (UTC).

[Other Functions]
[Time Zone]
[UTC-05:00 New York]

Operating modes: CAMERA MEDIA | MXF MXF+MP4 MP4

1 Press the MENU button.

2 Push the joystick up/down to select [Other Functions].

3 Select [Time Zone] in a similar fashion.

4 Push the joystick up/down to change the time zone.

5 Press the joystick to set the time zone and then press the MENU button to close the menu.

NOTES
- While the camcorder is being operated through the Browser Remote application, the [Time Zone] setting is not available.

Displaying the Date and Time while Recording

[OLED/VF Setup]
[Custom Display 2]
[Date/Time]
[Off]

You can display the date and time on the screen.

Operating modes: CAMERA MEDIA | MXF MXF+MP4 MP4

1 Press the MENU button.
2 Push the joystick up/down to select [OLED/VF Setup].
3 Select [Custom Display 2] and then [Date/Time] in a similar fashion.
4 Push the joystick up/down to select the information to display.
- Select [Off] to record without displaying the date and time.

5 Press the joystick and then press the MENU button to close the menu.
- The selected date/time display will appear at the bottom of the screen.

Changing the Language

[Other Functions]
[Language]
[English]

The default language of the camcorder is English. You can change it to German, Spanish, French, Italian, Polish, Portuguese, Russian, Simplified Chinese, Korean or Japanese. Please note that some settings and screens will be displayed in English, regardless of the language setting.

Operating modes: CAMERA MEDIA | MXF MXF+MP4 MP4

1 Press the MENU button.
2 Push the joystick up/down to select [Other Functions].
3 Select [Language] in a similar fashion.
4 Push the joystick up/down to select a language.
5 Press the joystick to change the language and then press the MENU button to close the menu.

Using the Menus

In CAMERA mode, many of the camcorder's functions can be adjusted from the menu for general settings, which opens after pressing the MENU button. You can also register frequently used menu settings in a customized submenu (My Menu) for easy access. In MEDIA mode, press the MENU button to open the menu for general settings or press the joystick to open the clip menu for clip operations. For details about the available menu options and settings, refer to *Menu Options* (📖 199).

Operating modes: CAMERA MEDIA | MXF MXF+MP4 MP4

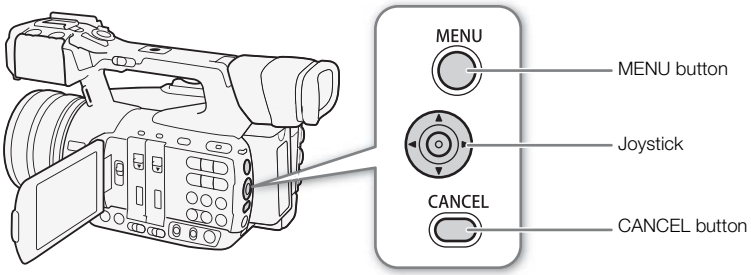

MENU button
Press to open the menu and then press again to close the menu after adjusting desired settings.

Joystick
Push the joystick to move the orange selection frame in the menu. Then, press the joystick itself to select the menu item indicated by the orange selection frame.

CANCEL button
Press to return to the previous menu or to stop some operations that are in progress.

ⓘ NOTES

- Although the button at the center of the joystick is not labeled as SET, in the manual, "press SET" will be used to mean pressing down the joystick itself.

Selecting an Option from the Menu

The following is a step-by-step explanation of how to select an option from the menu. In the procedures throughout the rest of this manual, opening and closing the menu is assumed and not included in the procedure.

1 Press the MENU button.
- The menu opens with the orange selection frame indicating the menu item that was selected the previous time the menu was closed (unless the camcorder was turned off).

2 Push the joystick up/down to select the desired submenu.

3 Push the joystick right or press SET.
- The orange selection frame will appear on a menu item in the submenu.
- Press the CANCEL button, push the joystick left, or select [↩] to return to the previous submenu.

4 Push the joystick up/down to select the desired menu item.
- If a submenu contains many menu items, a scroll bar will appear on the right side of the submenu indicating that you must scroll up or down to see other menu items.
- A ▶ mark next to a menu item indicates another submenu. Repeat steps 3 and 4.

5 Push the joystick right or press SET.
- The orange selection frame will appear on a setting option.
- Press the CANCEL button to return to the previous submenu.

6 Push the joystick up/down to select the desired setting option and then press SET.
- Depending on the menu item, additional selections may be necessary.

7 Press the MENU button to close the menu.

NOTES
- Unavailable items may appear grayed out.
- Pressing the MENU button at any time closes the menu.
- On some screens, the following icons may be displayed as a guide: SET, MENU, Cancel. They refer, respectively, to pressing the joystick (or SET button on a remote control), the MENU button or the CANCEL button.
- When using the supplied wireless controller, use the △, ▽, ◁, ▷ and SET buttons in the same way as the camcorder's joystick. Similarly, when using the optional RC-V100 Remote Controller, use the Up, Down, Left, Right and SET buttons. In either case, pressing the SET button is equivalent to pressing the joystick on the camcorder.
- You can check some of the current settings on the status screens (📖 209).

Using the Customized Submenu (My Menu)

You can register up to 14 frequently used menu settings under the My Menu submenu for easy access. Furthermore, if you set an assignable button to [My Menu] (📖 129), you can press the button to access your registered menu settings even faster and more easily.

Operating modes: CAMERA MEDIA | MXF MXF+MP4 MP4

Adding Menu Settings

[★ My Menu]
[Edit]
[Register]

1 Open the My Menu [Register] screen.
[★ My Menu] ❯ [Edit] ❯ [Register]
- The menu will change to blue to indicate you are selecting menu settings to add to the My Menu submenu.
- Press the CANCEL button to cancel the operation and return to the regular menu.

2 Navigate the menus to find the menu setting you want to add and then press SET.

3 Select [OK] and then press SET twice.
- The menu setting you registered will now appear under the My Menu submenu.

Rearranging Menu Settings

[★ My Menu] ▷ [Edit] ▷ [Move]

1 Open the My Menu [Move] screen.
  [★ My Menu] ▷ [Edit] ▷ [Move]
2 Push the joystick up/down to select the setting you want to move and then press SET.
  - An orange ⬍ icon will appear next to the setting you selected to move.
3 Push the joystick up/down to move the setting to the desired position and then press SET.

Removing Menu Settings

[★ My Menu] ▷ [Edit] ▷ [Delete]

1 Open the My Menu [Delete] screen.
  [★ My Menu] ▷ [Edit] ▷ [Delete]
2 Push the joystick up/down to select the setting you want to remove and then press SET.
3 Select [OK] and then press SET twice.

Resetting the My Menu Submenu

[★ My Menu] ▷ [Edit] ▷ [Reset All]

1 Reset all the menu settings registered to the My Menu submenu.
  [★ My Menu] ▷ [Edit] ▷ [Reset All]
2 Select [OK] and then press SET twice.

Preparing the Camcorder

This section outlines the basic preparations for the camcorder, such as attaching the microphone holder and lens hood and adjusting the OLED screen, viewfinder and grip.

Attaching the Microphone Holder Unit

Use the supplied screws to attach the microphone holder unit to the handle.

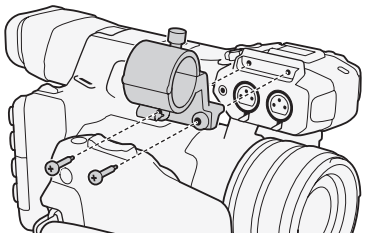

Attaching the Lens Hood

Attach the lens hood to protect the lens and reduce the amount of stray light that may hit the lens. Additionally, keeping the lens barrier closed can help avoid fingerprints and dirt on the lens.
Always remove the lens hood and attach the lens cap when carrying the camcorder or storing it after use.

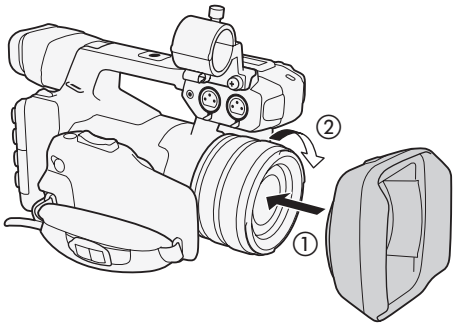

1 Remove the lens cap.
- The lens cap and lens hood cannot be used at the same time.

2 Place the lens hood on the front of the lens with the lock screw side pointing down (①) and turn it 90 degrees clockwise (②).
- Be careful not to deform the lens hood.
- Make sure that the lens hood is aligned with the thread.

3 Tighten the lock screw (③).

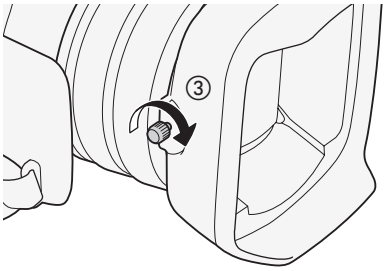

Using the Viewfinder

Adjusting the Viewfinder

1 Adjust the viewfinder's angle as necessary.

2 Turn on the camcorder and adjust the dioptric adjustment lever until the viewfinder's image is sharp.

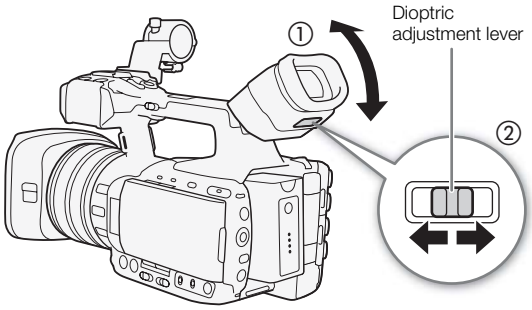

Attaching and Detaching the Eye Cup

Attach the eye cup so that it covers the rubber portion of the viewfinder unit.

- For left eye use, attach the eye cup so that the protruding portion faces the opposite side.

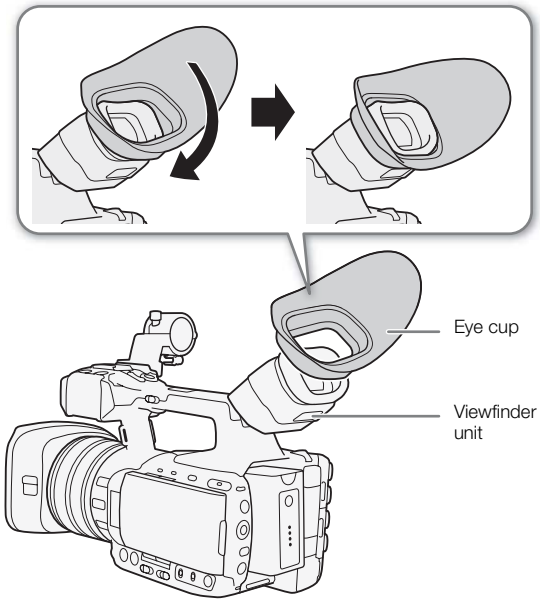

Detach the eye cup as shown in the illustration.

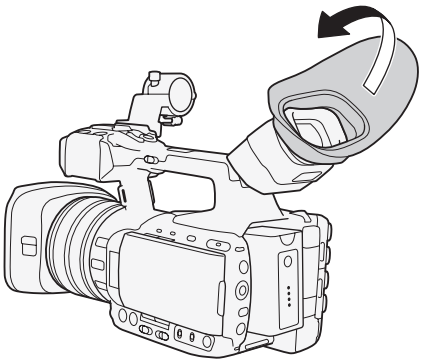

Using the OLED Panel

Open the OLED panel 90 degrees.

- You can rotate the panel 90 degrees downward or 180 degrees toward the lens.

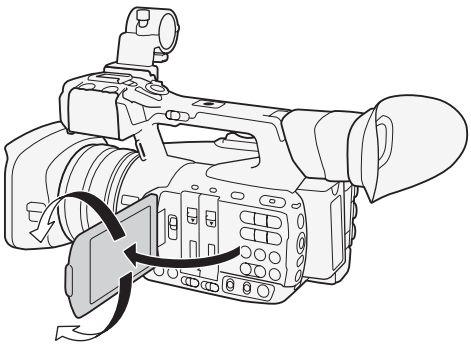

NOTES

- **About the OLED and viewfinder screens:** The screens are produced using extremely high-precision manufacturing techniques, with more than 99.99% of the pixels operating to specification. Less than 0.01% of the pixels may occasionally misfire. On the viewfinder screen only, pixels may also light up as white dots. This has no effect on the recorded image and does not constitute a malfunction.
- When you use a commercially available lens adapter and the image on the screen is inverted, you can use the [Other Functions] [Custom Function] [Scan Reverse Rec] setting to return the image to the correct orientation.

- If you are not interested in using the viewfinder while using the OLED screen, you can set [OLED/VF Setup] ➤ [OLED/VF Simul.] to [Off] to conserve the camcorder's power. Even when [OLED/VF Simul.] is set to [Off], closing the OLED panel will automatically activate the viewfinder.
- While recording with the OLED panel facing toward the subject, you can set [OLED/VF Setup] ➤ [OLED Mirror Image] to [On] to flip the image horizontally so subjects can see a mirror image of themselves.

Adjusting the Viewfinder/OLED Screen

You can adjust the brightness, contrast, color and sharpness of the viewfinder and OLED screen independently of each other. Additionally, you can turn on the increased luminence of the OLED panel or adjust the backlight of the viewfinder. These adjustments will not affect your recordings.

Operating modes: CAMERA MEDIA | MXF MXF+MP4 MP4

1 Open the setup menu for the viewfinder or OLED screen.
[OLED/VF Setup] ➤ [OLED Setup] or [Viewfinder Setup]
2 Select [Brightness], [Contrast], [Color], [Sharpness], [Luminence] or [Backlight] and then press SET.
3 Adjust the setting and then press SET.
- Repeat steps 2 and 3 to adjust other settings as necessary.

[OLED/VF Setup]
▽
[OLED Setup]
[Viewfinder Setup]
▽
[Brightness: ±0]
[Contrast: ±0]
[Color: ±0]
[Sharpness: 2]
[Luminence: Off]*
[Backlight: Normal]**

* [OLED Setup] only
**[Viewfinder Setup] only

NOTES

- If you set an assignable button to [OLED Setup] or [Viewfinder Setup] (📖 129), you can press the button to open the respective submenu.
- You can also press the DISP. button and hold it pressed for about 3 seconds to turn the OLED [Luminence] setting on and off.
- The OLED screen will be dimmed if the camcorder is left unused for approx. 3 minutes (except while recording or during playback). Performing any operation on the camcorder will return the brightness to its previous level.

Adjusting the Color Balance of the OLED Screen

As times passes, the color balance of the OLED screen may change gradually. You can adjust the color balance of the OLED screen to compensate for this change.

1 Open the [Color Balance] submenu.
[OLED/VF Setup] ➤ [OLED Setup] ➤ [Color Balance]
2 Select [R-B Simult. Adjust.] and then press SET.
3 Change the setting to adjust the red and blue levels simultaneously and then press SET.
4 If necessary, select [R Fine Tuning] or [B Fine Tuning] to further adjust only the red or blue level.
5 Adjust the setting as necessary and then press SET.

[OLED/VF Setup]
▽
[OLED Setup]
▽
[Color Balance]
▽
[R-B Simult. Adjust: ±0]
[R Fine Tuning: ±0]
[B Fine Tuning: ±0]

Setting the Screen to Black & White

The viewfinder and OLED screen display in color by default but you can set them to black & white. Even when the screen is black & white, onscreen text and icons will still be displayed in color.

[OLED/VF Setup]
[OLED/VF B&W]
[Off]

1 Open the [OLED/VF B&W] submenu.
[OLED/VF Setup] ❯ [OLED/VF B&W]

2 Select [On] and then press SET.

NOTES

- If you set an assignable button to [OLED/VF B&W] (129), you can press the button to turn the black & white display on and off.

Adjusting the Grip Unit

The grip unit can be rotated 120º (at 15º intervals) to give you a convenient grip angle for high- and low-angle shooting.

1 Push the grip's UNLOCK lever forward (toward the START/STOP button on the grip). While holding it pressed down, rotate the grip unit to the desired angle.

2 At about the desired angle, release the UNLOCK lever and rotate the grip unit further until it clicks in place.

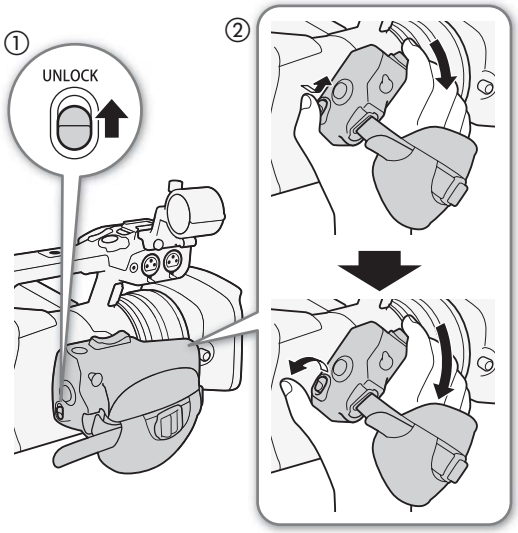

Adjusting the Grip Belt

Adjust the grip belt so that you can reach the grip zoom rocker with your index and middle fingers, and the START/STOP button with your thumb.

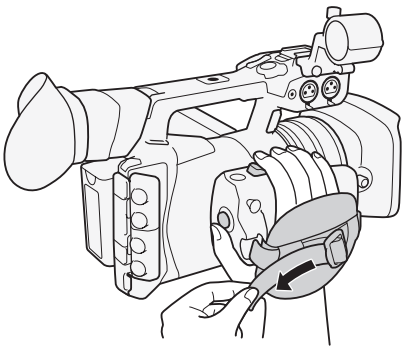

IMPORTANT

- Be careful not to drop the camcorder when adjusting the grip belt.

Attaching the Shoulder Strap

Pass the ends through the strap mounts and adjust the length of the strap.

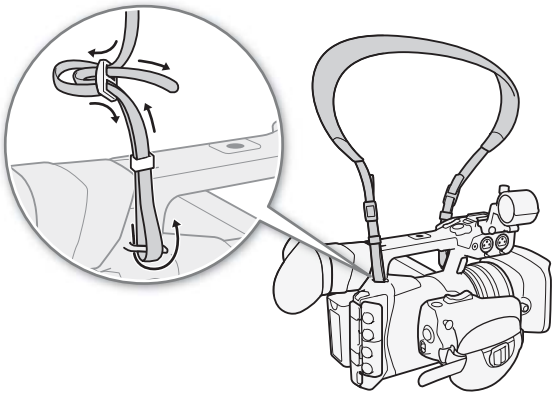

IMPORTANT

- Be careful not to drop the camcorder when attaching or adjusting the shoulder strap.

Removing and Attaching the Terminal Covers

You can remove the plastic terminal covers of all the camcorder's terminals to access them more readily.

Removing the Terminal Covers

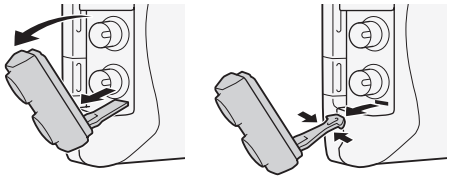

1 Open the terminal cover and pull it out.

2 Grasp the strip connecting the terminal cover to the camcorder and pull.
   - This step is not necessary for the covers for the REMOTE terminal and USB terminal, which you only need to pull straight out.

Attaching the Terminal Covers

Insert the connecting strip into the opening to attach the terminal cover.

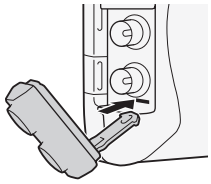

NOTES

- If the connecting strip is difficult to grasp, use a pair of tweezers or similar tool.

Using a Tripod

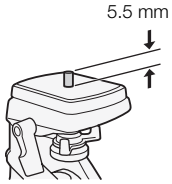

You can mount the camcorder on any tripod with a 1/4" mounting screw, no longer than 5.5 mm (0.2 in.). Using tripods with longer mounting screws may cause damage to the camcorder.

Using a Tripod with 3/8" Mounting Screws

To use a tripod with 3/8" mounting screws, first attach the optional TB-1 Tripod Adapter Base to the camcorder and then attach the tripod to the adapter base.

1 Remove the tripod base from the camcorder.
- Remove the 4 screws and then remove the base.

2 Attach the optional TB-1 Tripod Adapter Base.
- Firmly screw in the 4 screws.

3 Attach the tripod.
- Firmly screw in the tripod screw.
- If a tripod has both a 1/4" screw and a 3/8" mounting screw, firmly screw in both.

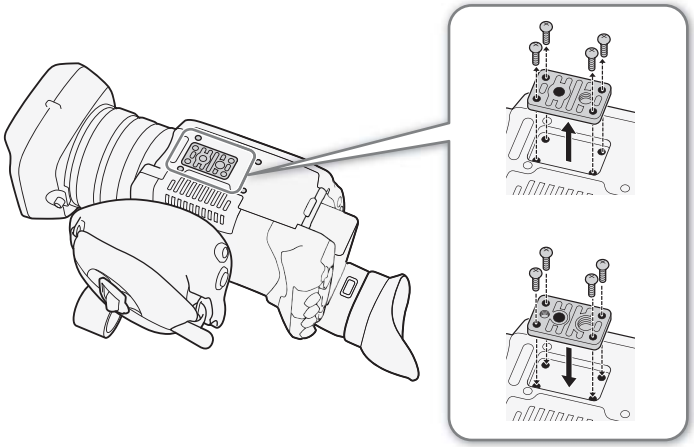

Preparing Recording Media

The camcorder records movies in MXF format (MXF clips) to CompactFlash (CF) cards and movies in MP4 format (MP4 clips) and photos* to SD, SDHC and SDXC memory cards. The camcorder is equipped with two CF card slots.
The recording media that will be used for recording (CF card, SD card, CF card and SD card, two CF cards) depends on the movie format (55) and CF card recording method (42) selected. Be sure to insert recording media to all the card slots necessary. Initialize recording media (41) when you use them with this camcorder for the first time.

* The camcorder can record custom picture files and a camera settings file onto the SD card as well. The SD card serves also to store user memo files created with **Canon XF Utility** that you can then read and embed in the metadata of MXF clips (111).

Compatible Recording Media

For the latest information about recording media tested for use with this camcorder, visit your local Canon Web site.

CF cards: UDMA-compatible[1] Type I CF cards. Capacity: 512 MB or larger.

[1] The Ultra Direct Memory Access (UDMA) specification allows data to be transferred between the CF card and device at high transfer speeds (measured in MB/s). Depending on the CF card, you may not be able to record even when using a UDMA-compatible CF card.

SD cards: SD / SDHC / SDXC cards. SD Speed Class[2]: CLASS 4, 6 or 10[3].
As of May 2014, the MP4 recording function has been tested using memory cards made by Panasonic, Toshiba and SanDisk.

[2] SD Speed Class is a standard that indicates the minimum guaranteed data transfer of SD cards.
[3] To record MP4 clips with a bit rate of 35 Mbps, we recommend using SD cards rated CLASS 6 or 10.

IMPORTANT

- After repeatedly recording, deleting and editing scenes (fragmented memory), it will take longer to write data on recording media and recording may stop. Save your recordings and initialize the recording media with the camcorder.
- **About high capacity recording media** You can use CF cards with a capacity of 128 GB or larger and SDXC cards with this camcorder but such recording media are initialized using the exFAT file system.
  - When using exFAT-formatted recording media with other devices (digital recorders, card readers, etc.), make sure that the external device is compatible with exFAT. For more information on compatibility, contact the computer, operating system or memory card manufacturer.
  - If you use exFAT-formatted recording media with a computer OS that is not exFAT-compatible, you may be prompted to format the memory card. In such case, **cancel the operation to prevent data loss**.

NOTES

- Proper operation cannot be guaranteed for all recording media.

Inserting a CF Card

You can insert a CF card into CF card slot A or slot B. If you have two CF cards, you can use both slots.

1 Slide down the CF card slot cover switch and open the CF card slot cover.

2 Insert the CF card straight, with the label facing away from the lens, all the way into the slot.

3 Close the CF card slot cover.

- Do not force the cover closed if the CF card is not correctly inserted.

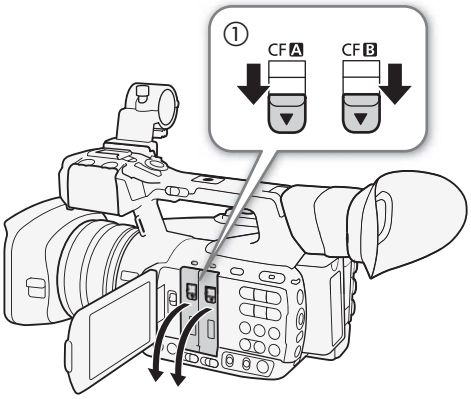

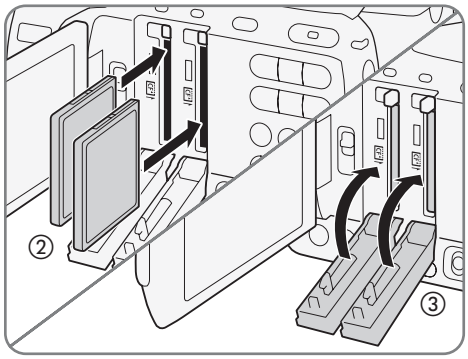

Checking the Status of the CF Card Slots

You can check the status of the CF card slots immediately by looking at the CF A/CF B access indicator. Refer to the following table.

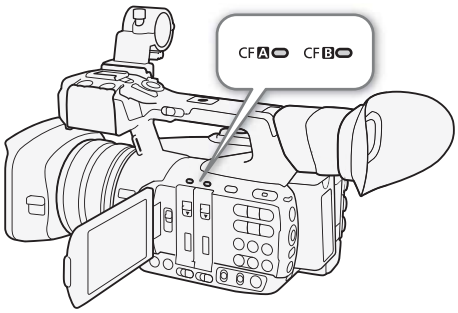

Access indicator color	CF card slot status
Red	Accessing the CF card.
Green	Recording/playback is possible and the CF card slot is selected for recording/playback.
Indicator off	A CF card is not inserted, the CF card slot is not currently selected, or the CF card is not being accessed.

If you set the [Other Functions] [Media Access LED] setting to [Off], the access indicators will not illuminate.

Removing a CF card

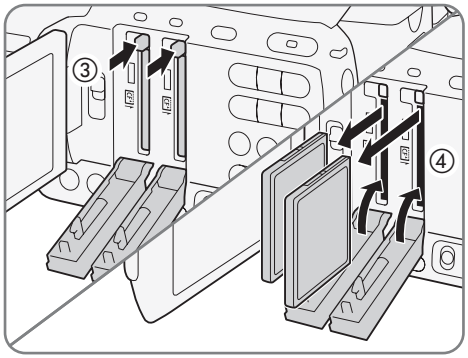

1 Wait until the access indicator of the CF card slot with the CF card to be removed is off.

2 Slide down the CF card slot cover switch and open the CF card slot cover.

3 Push in the CF card release button to release the CF card.

4 Pull the CF card all the way out and close the CF card slot cover.

IMPORTANT

- Observe the following precautions while the CF A or CF B access indicator is illuminated in red. Failure to do so may result in permanent data loss.
  - Do not disconnect the power source or turn off the camcorder.
  - Do not open the cover of the CF card slot being accessed.

Inserting and Removing an SD Card

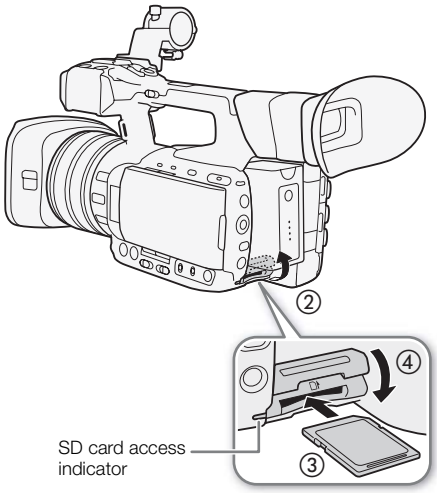

1 Make sure the SD card access indicator is off.

2 Open the SD card slot cover.

3 Insert the SD card, with the label facing up, all the way into the SD card slot until it clicks.
- To remove the SD card, push the SD card once to release it. When the SD card springs out, pull it all the way out.

4 Close the SD card slot cover.
- Do not force the cover closed if the SD card is not correctly inserted.

SD card access indicator	SD card status
On or flashing	Accessing the SD card.
Off	An SD card is not inserted or the SD card is not being accessed.

If you set the [Other Functions] [Media Access LED] setting to [Off], the access indicator will not illuminate.

IMPORTANT

- Observe the following precautions while the SD card access indicator is on or flashing. Failure to do so may result in permanent data loss.
  - Do not disconnect the power source or turn off the camcorder.
  - Do not remove the SD card.
- SD cards have front and back sides that are not interchangeable. Inserting an SD card facing the wrong direction can cause a malfunction of the camcorder. Be sure to insert the SD card as described in the procedure above.

Initializing the Recording Media

The first time you use any recording media with this camcorder, initialize it first. You can also initialize a recording media to permanently delete all the data it contains.

When initializing an SD card, you can select quick initialization, which clears the file allocation table but does not physically erase the stored data, or complete initialization, which deletes all data completely.

Operating modes: CAMERA MEDIA | MXF MXF+MP4 MP4

[Other Functions]

[Initialize Media]

1 Open the [Initialize Media] submenu.
[Other Functions] [Initialize Media]

2 Select [CF A], [CF B] or [SD Card] and then press SET.

To initialize a CF card

3 Select [OK] and then press SET.

4 When the confirmation message appears, press SET.
- The CF card is initialized and all the data it contains is erased.

To initialize an SD card

3 Select [Complete] (complete initialization) or [Quick] (quick initialization) and then press SET.

4 Select [OK] and then press SET.
- If you are using the [Complete] initialization option, press SET twice to cancel the operation while it is in progress. You can use the SD card but all data will be erased.

5 When the confirmation message appears, press SET.
- The SD card is initialized and all the data it contains is erased.

IMPORTANT

- Initializing a recording media will permanently erase all data, including MXF clips with an OK mark and custom picture files. Lost data cannot be recovered. Make sure you save important recordings in advance.
- Depending on the SD card, the complete initialization may take up to a few minutes.

NOTES

- While recording on a CF card, you can initialize another CF card in the other CF card slot.
- If you set an assignable button to [Initialize Media] (129), you can press the button to open the initialization submenu.

Switching Between the CF Card Slots

The camcorder features two CF card slots, CF A (CF card slot A) and CF B (CF card slot B). If both slots contain a CF card, you can switch between them as necessary.

Operating modes: CAMERA MEDIA | MXF MXF+MP4 MP4

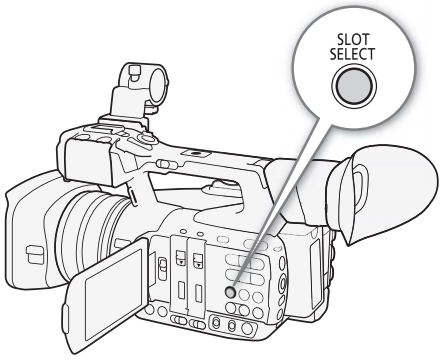

Press the SLOT SELECT button.

- The access indicator of the selected CF card slot will illuminate in green. On the screen, the CF card selected is indicated with a ▶ mark next to CF card icon.

NOTES

- If both CF card slots contain a CF card and you open the cover of the selected slot, the camcorder will automatically switch to the other slot.
- You cannot use the SLOT SELECT button to switch between CF card slots while recording MXF clips.
- While using the Browser Remote application, you can also switch between CF card slots remotely by pressing [SLOT SELECT] on the Browser Remote screen.

Selecting the CF Card Recording Method

The camcorder features two useful CF card recording methods, relay recording and double slot recording.

Relay recording: This function allows you to continue recording MXF clips on another CF card without interruption if the CF card you are using becomes full. Relay recording is available from CF card slot A to CF card slot B, and vice versa.

Double slot recording: This function records the same MXF clip simultaneously to both CF cards, which is a convenient way to make a backup copy of your recordings while you record.

Operating modes: CAMERA MEDIA | MXF MXF+MP4 MP4

To use relay recording

By default, this function is activated. If it has been deactivated, follow the procedure below to activate it.

1 Open the [Relay Recording] submenu.
[Other Functions] ➤ [MXF] ➤ [Relay Recording]

2 Select [On] and then press SET.

[Other Functions]
[MXF]
[Relay Recording]
[On]

To use double slot recording

1 Open the [Double Slot Recording] submenu.
[Other Functions] ➤ [MXF] ➤ [Double Slot Recording]

2 Select [On] and then press SET.

[Other Functions]
[MXF]
[Double Slot Recording]
[Off]

NOTES

- You can combine double slot recording and the MXF+MP4 movie format (123) to record the same video on three recording media and in two different movie formats.
- When the bit rate is set to 50 Mbps (55), relay recording is not available during slow motion recording.
- If a CF card becomes full during double slot recording, recording on both CF cards will stop. On the other hand, if an error occurs with one of the CF cards, recording will continue on the other CF card.
- Double slot recording cannot be used with relay recording or slow & fast motion recording.

Checking the Available Recording Time on a Recording Media

In CAMERA mode, the upper left of the screen will show the icon of the recording media that is in use and next to it the approximate remaining recording time in minutes*. When the movie format (📖 55) is set to MXF or MXF+MP4, the CF card currently selected will be indicated by a ▶ mark next to the CF card icon.
On the [Media] status screen (📖 211), you can check the total space and used space of each recording media, as well as the available recording time* and the available number of photos (SD card only).

* The approximate available recording time is based on the current bit rate (📖 55).

Recovering Data on a Recording Media

Some actions, such as suddenly turning off the camcorder or removing the recording media while data is being recorded, can cause data errors on the recording media. In such case, you may be able to recover the data if a message indicating you that data (CF card) or a clip (SD card) needs recovering. The message appears when you insert a corrupted CF card into the camcorder or when you try to play back a corrupted MP4 clip from the [MP4] index screen.

Operating modes: CAMERA MEDIA | MXF MXF+MP4 MP4

1 When the camcorder prompts you to recover the data, select [OK] and then press SET.

2 When the confirmation message appears, press SET.

ⓘ NOTES

- This procedure will delete clips shorter than 10 seconds in length. Additionally, up to 10 seconds will be deleted from the end of the clips.
- In some cases, it may not be possible to recover the data. This is more likely when the file system is corrupted or the recording media is physically damaged.
- While recording on a CF card, you can recover data from another CF card by inserting it into the other CF card slot.

Remote Operation of the Camcorder

The camcorder can be operated remotely in a number of different ways with varying degrees of control. First, you can use the supplied wireless controller as described below. You can also connect an optional RC-V100 Remote Controller for maximum control of your recordings at a professional level.
Finally, using the camcorder's network functions, you can connect any device with a Web browser either wirelessly (via Wi-Fi) or through a LAN cable and use the Browser Remote application to control the camcorder (📖 182).

Operating modes: CAMERA MEDIA | MXF MXF+MP4 MP4

Using the Supplied Wireless Controller

Inserting the Battery

Insert the supplied CR2025 lithium button battery into the wireless controller before use.

1 Press the tab in the direction of the arrow (①) and pull out the battery holder (②).
2 Place the lithium button battery with the + side facing up (③).
3 Insert the battery holder (④).

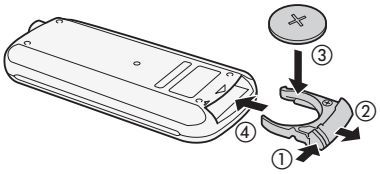

Activating the Wireless Controller

By default, the wireless controller is activated. If it has been deactivated, follow the procedure below to activate it.

1 Open the [Wireless Controller] submenu.
[🔧 Other Functions] ➤ [Wireless Controller]
2 Select [On] and then press SET.

[🔧 Other Functions]
[Wireless Controller]
[On]

NOTES

- If you set an assignable button to [Wireless Controller] (📖 129), you can press the button to activate/deactivate the use of the supplied wireless controller.

Using the Wireless Controller to Operate the Camcorder

When using the wireless controller, point it at the camcorder's remote sensor. When the wireless controller's buttons are operated, the camcorder's tally lamps will illuminate.

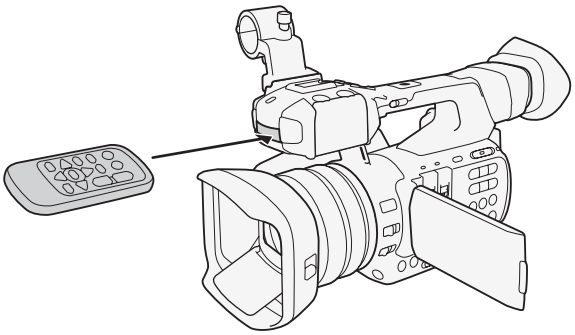

NOTES

- When you use the START/STOP button or ZOOM buttons on the supplied wireless controller, you must press the record enable button simultaneously with the desired button.
- When the camcorder cannot be operated with the supplied wireless controller, or when it can only be operated at very close range, replace the battery.
- The supplied wireless controller may not work properly when the remote sensor is located under strong light sources or direct sunlight.

Using the Optional RC-V100 Remote Controller

You can attach the optional RC-V100 Remote Controller to control the camcorder (including advanced recording functions) from a distance. In addition to turning the camcorder on and off and navigating the menus, while recording you can control various camera functions, such as aperture, shutter and zoom, and custom picture settings, like knee and sharpness.
The connection cable supplied with the RC-V100 is required to connect the RC-V100 to the camcorder's REMOTE terminal.

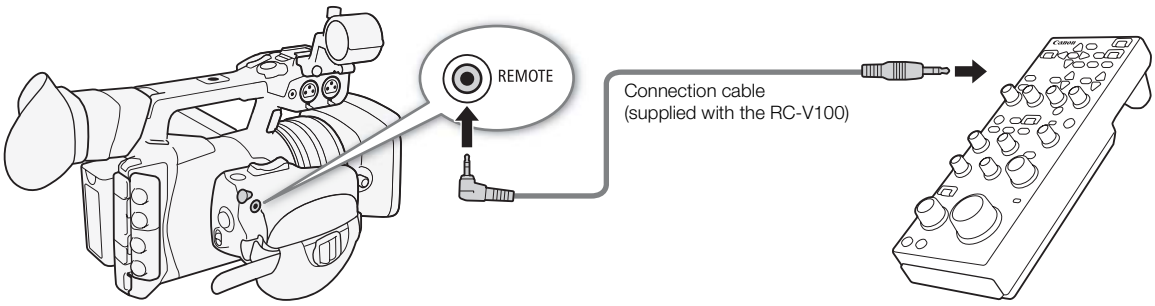

1 Turn off the camcorder and connect the optional RC-V100 Remote Controller to the camcorder.
   - For details, refer to the instruction manual of the RC-V100.
2 Turn on the camcorder in CAMERA mode and open the [REMOTE Term.] submenu.
   [Other Functions] [REMOTE Term.]
3 Select [RC-V100] and then press SET.

[Other Functions]
[REMOTE Term.]
[Standard]

Options

[RC-V100]: Select this option to use the optional RC-V100 Remote Controller.
[Standard]: Select this option to use commercially available remote controls.

NOTES

- The camcorder's ND filter cannot be changed using the ND button on the remote controller.
- When the camcorder is set to full auto mode (49), settings related to the aperture, gain, shutter speed and white balance (except for [R Gain] and [B Gain] in the custom picture's [White Balance] settings) cannot be changed using the remote controller.
- Custom picture settings can be changed using the remote controller only when an appropriate custom picture file is selected (132).

Recording Video

This section explains the recording basics. Before you begin recording, make a test recording first to check if the camcorder operates correctly. Record an MXF clip for approximately 6 minutes at 50 Mbps and an MP4 clip for approximately 20 minutes at 35 Mbps (📖 55). Should the camcorder fail to operate correctly, refer to *Troubleshooting* (📖 218).
For details on recording audio, refer to *Recording Audio* (📖 98).

Operating modes: CAMERA MEDIA | MXF MXF+MP4 MP4

Preparing to Record

1 Remove the lens cap and attach the lens hood (📖 32).

2 Attach a charged battery pack to the camcorder (📖 24).

3 Insert recording media (one or two CF cards, SD card) as necessary (📖 39, 40).
- Insert a CF card to record MXF clips; insert an SD card to record MP4 clips.
- Insert CF cards into both CF card slots to use relay recording (📖 42) or double slot recording (📖 42).

4 Slide down the lens barrier switch to OPEN to open the lens barrier.

5 Adjust the viewfinder.

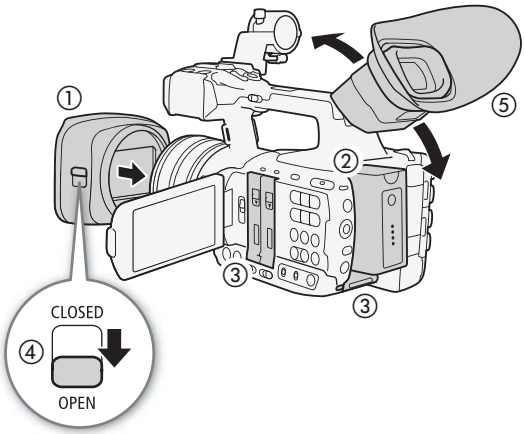

NOTES
- The camcorder can add a user memo (📖 111) to an MXF clip as you record. It can be used to store information such as the clip name, camera operator and filming location. However, you must set the user memo before recording.

Recording

1 Hold down the button on the POWER switch and slide the switch to CAMERA.

- The camcorder turns on in CAMERA mode and enters record pause mode.
- The access indicators of card slots with recording media will illuminate momentarily in red. Then, the CF card access indicator of the CF card slot selected for recording MXF clips will change to green.

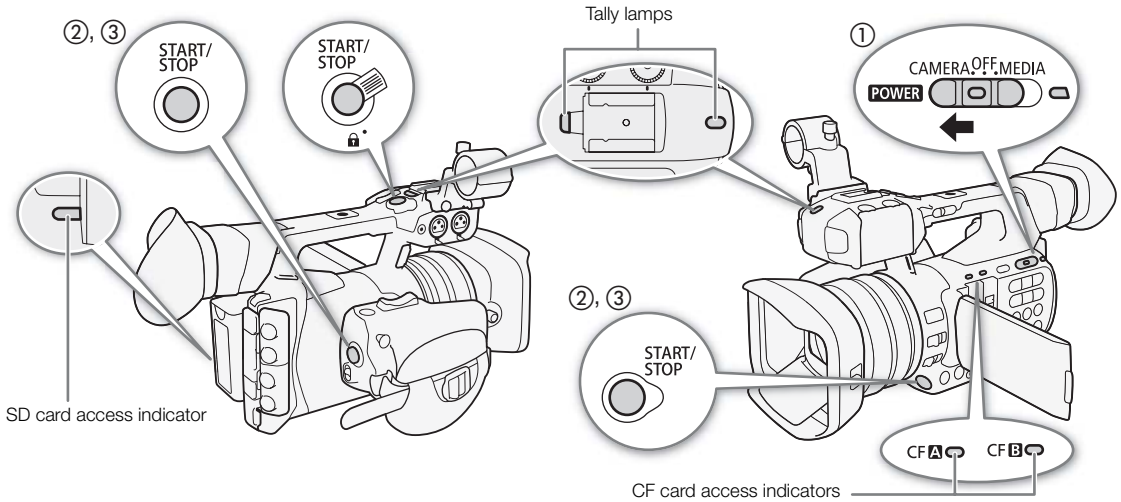

2 Press the START/STOP button to begin recording.

- Recording starts. The front and rear tally lamps illuminate and, depending on the movie format selected, [●REC], [●MP4] or both displays will appear at the top of the screen.
- You can use the START/STOP button on the grip, on the handle or at the front of the camcorder (next to the lens).
- When you use the supplied wireless controller, press the START/STOP button and the record enable button simultaneously.
- For details about recording when the movie format is set to MXF+MP4, refer to *Simultaneous Recording of MXF and MP4 Clips* (📖 123).

3 Press the START/STOP button to pause the recording.

- The clip* is recorded on the recording media and the camcorder enters record pause mode. The tally lamps will also go out.

* "Clip" refers to a single movie unit recorded with a single recording operation.

IMPORTANT

- Observe the following precautions while any access indicators are illuminated or flashing in red. Failure to do so may result in permanent data loss.
  - Do not open the CF card slot cover or the SD card slot cover of the recording media being accessed and do not remove the recording media.
  - Do not disconnect the power source or turn off the camcorder.
- Be sure to save your recordings regularly (📖 168), especially after making important recordings. Canon shall not be liable for any loss or corruption of data.

NOTES

- The START/STOP button on the handle has a lock lever to prevent accidental operation. Set the lock lever to 🔒 if you do not want a recording inadvertently paused or if you do not plan to use that START/STOP button. Return the lever to its previous position to enable use of the START/STOP button again.

- You can use [Other Functions] [Review Recording] (116) to review part or all of the last clip recorded.
- If you set an assignable button to [Add OK Mark] or [Add ✓ Mark] (129), you can press the button to add an OK mark or ✓ mark to the last MXF clip recorded.
- You can use [Other Functions] [Delete Last Clip] to delete the last clip recorded. However, you cannot delete the last clip if double slot recording is activated or if the movie format is set to MXF+MP4.
- When you set [Video Setup] [Rec Command] to [On] and you connect the camcorder to another device using the 3G/HD-SDI terminal (XF205 only) or HDMI OUT terminal, if you start or stop recording with the camcorder, the other device will also start or stop recording.

Recording in Full Auto Mode

Move the FULL AUTO switch to ON to change the camcorder to full auto mode. In full auto mode, the camcorder automatically sets the aperture, gain, shutter speed, and white balance. The camcorder will continuously adjust the brightness and white balance automatically*. In full auto mode, however, the focus mode will not be set to autofocus.

* The light metering mode (68) will be set to [Standard], AE shift (67) will be set to [±0] and the AGC limit (63) will be set to [Off/27 dB].

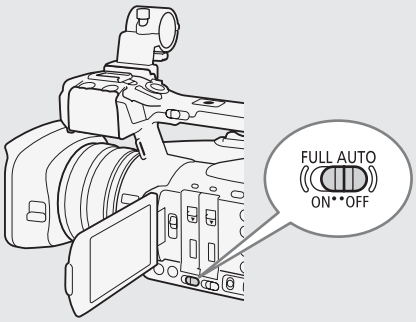

About MXF Clips

When the camcorder records an MXF clip, it also assigns a 6-character clip name consisting of a 2-character prefix (letters or numerals) and 4 numerals (for example, “AA0001”). The last 4 numbers serve as a running counter that increases every time a clip is recorded. You can set the initial clip name in advance using the [Other Functions] [MXF] [Clips] [Title Prefix] and [Number Setting] settings. You cannot change the clip name after the clip is recorded.

- MXF clips will be split in the following cases.
  - When relay recording (42) is activated and the selected CF card becomes full, the recording will continue as a separate relay clip on the other CF card.
  - The video (stream) file in a clip will be split approximately every 2 GB for clips with a long recording time (approximately every 1 GB during slow motion recording). Even in such case, playback will be continuous.
- If you record using the custom picture and metadata settings, those settings will be recorded with the MXF clip. For more details, refer to *Custom Picture Settings* (132) and *Using Metadata* (111).

About MP4 Clips

- MP4 clips are assigned consecutive file numbers that consist of 7 digits, like “100-0001”. The first 3 digits indicate the folder where the file is saved and the last 4 digits are a unique identifier for each file. You can select how the files are numbered (117).
- For scenes with a long recording time, the video (stream) file in a clip will be split in the following cases. Even in such case, playback will be continuous. Using Data Import Utility (170), you can join such split files and save them on a computer as a single clip.
  - When the file size reaches approximately 4 GB.
  - After recording a single clip continuously for approximately 29 minutes 50 seconds (frame rate set to 59.94P) or for approximately 59 minutes 50 seconds (other frame rates).
- A single MP4 recording operation can go on continuously for about 12 hours. Then the camcorder will stop automatically.

Remote Operation Using Browser Remote

After completing the necessary preparations (📖 182), you can start and stop recording from a connected device using the Browser Remote application.

1 Press [LIVE VIEW ON/OFF] to show the camcorder's live view image on the Browser Remote screen.

2 Press [START/STOP] to begin recording.

- Depending on the movie format selected, the recording operation indicator changes to [●REC] (MXF clips), [●MP4] (MP4 clips) or both and the center of the START/STOP button lights up in red.
- The time code displayed on the Browser Remote screen is the same as on the camcorder.
- Press [START/STOP] again to pause the recording.

ⓘ NOTES

- The Browser Remote application has a key lock function that is limited only to the controls on the application's screens (you will still be able to use the controls on the camcorder). Press [🔒] to lock the application's controls; press [🔒] to reactivate them.

Onscreen Displays

Refer to this section for an explanation of the various screen displays that appear in CAMERA mode. You can use the custom display function (📖 142) to turn off individual onscreen displays if they are not required. The menu item that controls each display is given in the following table (1: indicates a menu item under [Custom Display 1] and 2: indicates a menu item under [Custom Display 2]).

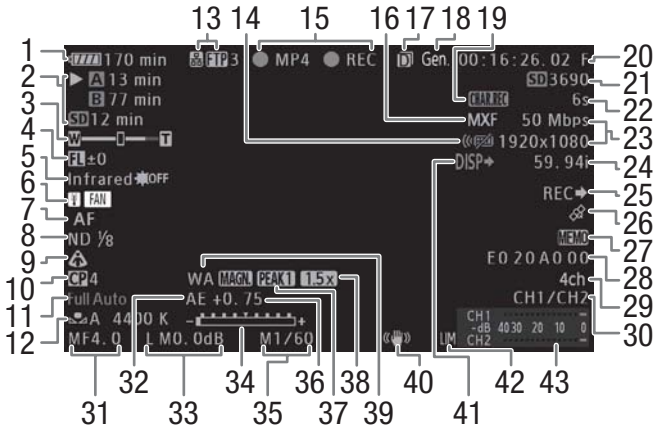

When displaying the date and time (📖 28):

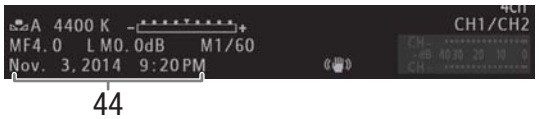

Number	Icon/Display	Description	Custom Display	📖
1	→ → → → (in red) 000 min	Remaining battery charge The icon shows an estimate of the remaining charge. When using a battery pack compatible with Intelligent System, the remaining recording time is displayed, in minutes, next to the icon. • When is displayed, replace the battery pack with a fully charged one. • Depending on the conditions of use, the actual battery charge may not be indicated accurately.	2: [Remaining Battery]	–
2	Recording media status and available recording time estimate		2: [Remaining Rec Time]	–
	A 00 min, B 00 min	MXF recording: in green - can record; in white - reading the CF card. The CF card selected for recording is indicated with a ▶ mark.		
	, (in red)	No CF card or cannot record on the CF card.		
	SD 00 min	MP4 recording: in green - can record; in yellow - the SD card is almost full.		
	(in red)	No SD card or cannot record on the SD card.		
	D 00 min	Remaining recording time for double slot recording (📖 42): in green - can record; in red - cannot record. • Displayed only when the movie format is set to MXF.		
3	W T Z 00/00	Zoom indicator	1: [Zoom Position]	74, 141

Number	Icon/Display	Description	Custom Display	📖
4	FL ±000	Focal length guide	–	128
5	Infrared , OFF	Infrared mode and status of the infrared light	1: [Infrared]	126
6	(in yellow/red), FAN	Temperature warning/Fan operation. • When the camcorder's internal temperature is high, will appear in yellow. If the temperature rises further due to continued use, it will change to red and the fan may be activated automatically.	2: [Temperature/Fan]	54
7	MF 0.0ft AF M.AF I.AF	Focus mode • While focusing in manual focus mode, the estimated distance to the subject will be displayed as well.	1: [Focus Mode], 1: [Object Distance]	81
	, o	Face AF		85
8	ND 1/2, 1/4, 1/8	ND filter	1: [ND Filter]	67
9	,	Light metering mode	1: [Light Metering]	68
10	CP 0, CP 0	Custom picture	1: [Custom Picture]	132
11	Full Auto	Full auto mode	1: [Full Auto]	49
12	AWB 0000 K A/B 0000 K K 0000 K, ,	White balance	1: [White Balance]	69
13	Network functions		2: [Network Functions]	174, 177, 179
	, AP,	Network type (Wi-Fi, Camera Access Point, Ethernet) and connection status: in white - function ready to be used; in yellow - connecting to or disconnecting from a network.		
	FTP 0	FTP file transfer and number of files queued: icon in white - login to the FTP server completed; in yellow - logging in to the FTP server; in red - FTP transfer not possible.		189
	Remote	Browser Remote: in white - preparations for connection completed; in yellow - connecting to or disconnecting from the control device; in red - Browser Remote cannot be used.		182
14		Wireless controller disabled	2: [Wireless Controller]	44
15	Recording operation		2: [Recording Mode]	–
	STBY, ●REC	MXF recording: record pause, recording.		
	MP4, ●MP4	MP4 recording: record pause, recording.		
	INT STBY, ●INT STBY, ●INT REC	Interval recording: record pause (before the sequence has started), recording standby (once the sequence has started), recording. • In record pause mode before the interval recording sequence has started, [INT] flashes.		118
	FRM STBY, ●FRM STBY, ●FRM REC	Frame recording: record pause (before the sequence has started), recording standby (once the sequence has started), recording. • In record pause mode before the frame recording sequence has started, [FRM] flashes.		119
	S&F STBY, ●S&F REC	Slow & fast motion recording: record pause, recording.		120
	PRE REC STBY, ●PRE REC	Pre-recording: record pause, recording.		121
16	MXF, MP4	Movie format	2: [Movie Format]	55
17	D	Double slot recording	2: [Recording Mode]	42
18	Gen.	Genlock (XF205 only)	2: [Genlock]	94
19	CHAR.REC	Onscreen displays superimposed on the recording	2: [OSD Recording]	141
20	00:00:00.00, 00:00:00:00	Time code	2: [Time Code]	90
21	SD 0000	Approximate number of photos that can be recorded on the SD card	2: [Remaining Photos]	195

Number	Icon/Display	Description	Custom Display	📖
22	1s - 10m00s	Interval recording counter	2: [Interval Counter]	118
23	00 Mbps 0000x0000	Bit rate (Mbps) and resolution	2: [Bit Rate/ Resolution]	55
24	00.00P, 00.00i	Frame rate • During slow & fast motion recording, the shooting frame rate is also displayed (00/00.00P).	2: [Frame Rate]	56
25	REC➔, STBY➔	Output recording command	2: [Rec Command]	49
26		GPS signal: continuously on - satellite signal acquired; flashing - satellite signal not acquired. • Displayed only when an optional GP-E2 GPS Receiver is connected to the camcorder.	2: [GPS]	114
27	MEMO	User memo	2: [User Memo]	111
28	00 00 00 00	User bit	2: [User Bit]	93
29	4ch	4-channel audio recording	2: [4-Channel Input]	100
30	CH0/CH0	Audio output channels	2: [Monitor Channels]	166
31	A/M F0.0	Aperture value	1: [Iris]	65
32	WA, TL	Conversion lens	1: [Conversion Lens]	80
33	L/M/H A/M 00.0dB	Gain	1: [Gain]	62
34		Exposure bar • Only displayed when the gain, iris and shutter are all set to manual adjustment.	1: [Exposure]	67
35	A/M 1/0000, A/M 000.00Hz, A/M 000.00°	Shutter speed	1: [Shutter]	58
36	AE ±0.00	AE Shift	1: [Exposure]	67
37	PEAK1, PEAK2	Peaking	1: [Peaking]	84
38	1.5x, 3.0x, 6.0x	Digital tele-converter	1: [Tele-converter]	74
39	MAGN.	Magnification	1: [Magnification]	84
40	OIS functions		1: [OIS Functions]	87
	,	Image stabilizer		
		Powered IS		
41	DISP➔	Output onscreen displays	2: [Output Display]	165
42	LIM	Audio peak limiter	2: [Audio Level]	106
43	CH1 -dB 40 30 20 10 0 CH2	Audio level meter		105
44	Date/time		–	28

NOTES

- You can press the DISP. button to switch the onscreen displays in the following sequence. Show all onscreen displays → show only onscreen markers* → hide all onscreen displays.
  * Only when [OLED/VF Setup] [Markers] [Enable] is set to [On].

Power Save Mode

Activate the power save mode to turn off the screen and reduce battery consumption. At the press of a button, the camcorder will immediately return to record pause mode.

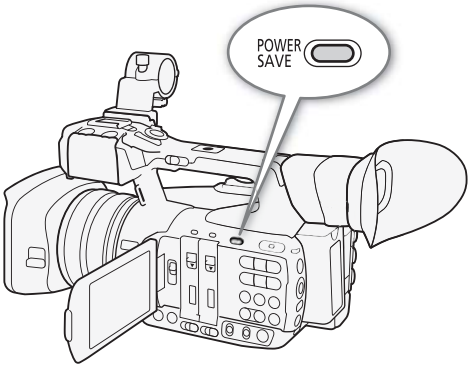

1 Hold the POWER SAVE button pressed down for at least 1 second.
- The screen will turn off and the power indicator will illuminate in orange.
- During power save mode, the tally lamps will flash twice approximately every 3 seconds. The camcorder retains previous time code and camcorder settings.

2 Press the POWER SAVE button to return the camcorder to record pause mode.

Using the Fan

During CAMERA mode, the camcorder uses an internal cooling fan to reduce the camcorder's internal heat.

Operating modes: CAMERA MEDIA | MXF MXF+MP4 MP4

1 Open the [Fan] submenu.
[Other Functions] [Fan]

2 Select the desired option and then press SET.

[Other Functions]
[Fan]
[On]

Options

[On]: The fan runs at a slow speed at all times (except when the camcorder is in power save mode, then it is turned off). Use this default setting in most cases.

[Automatic]: The fan runs at a high speed while the camcorder is not recording (including during power save mode) and it is automatically turned off while the camcorder is recording. However, if the internal temperature of the camcorder is too high (appears in red), the fan will be activated automatically (in that case, FAN will appear next to the icon). When the camcorder's temperature has decreased sufficiently, the fan will be turned off. Use this setting when you do not want the camcorder to pick up the operating sound of the cooling fan.

NOTES

- Be careful not to cover with tape or otherwise obstruct the cooling fan's air intake and exhaust vents (marked as AIR INTAKE/EXHAUST VENT).

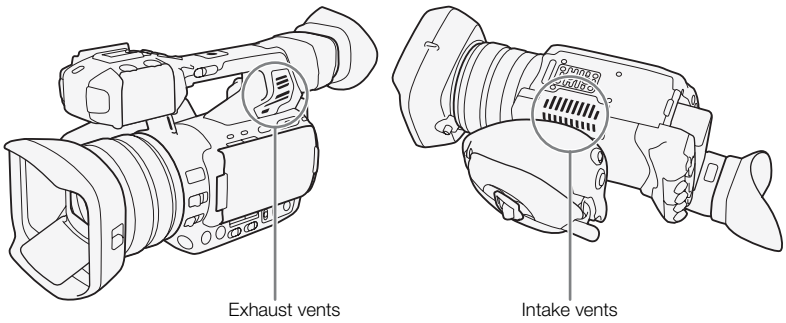

Video Configuration: Movie Format, Bit Rate, Resolution and Frame Rate

Before you record, select the movie format, bit rate, resolution (frame size) and frame rate that best match your creative needs.

Operating modes: CAMERA MEDIA | MXF MXF+MP4 MP4

Selecting the Movie Format

You can record video in MXF format, MP4 format or simultaneously in both formats. MXF clips are recorded on a CF card while MP4 clips are recorded on an SD card, so be sure to insert the appropriate recording media according the movie format you want to use. If you can combine the MXF+MP4 movie format with double slot recording (📖 42), you can record the same video on three recording media and in two different formats.

[Other Functions]
[Movie Format]
[MXF (CF)]

1 Open the [Movie Format] submenu.
[Other Functions] ➤ [Movie Format]

2 Select [MXF (CF)] to record only MXF clips, [MP4 SD] to record only MP4 clips, or [MXF (CF)+MP4 SD] to record simultaneously in both formats.

Selecting the Bit Rate and Resolution

1 Depending on the movie format selected, open the corresponding [Bit Rate/Resolution] submenu to set the bit rate and resolution.
[Other Functions] ➤ [MXF] ➤ [Bit Rate/Resolution] (MXF clips)
[Other Functions] ➤ [MP4] ➤ [Bit Rate/Resolution] (MP4 clips)

2 Select the desired option and then press SET.
- The selected bit rate and resolution will appear on the upper right of the screen. However, when the movie format is set to MXF+MP4,only the bit rate and resolution of the MXF clips will appear on the screen.

[Other Functions]
[MXF]
[Bit Rate/Resolution]
[50 Mbps 1920x1080]

[Other Functions]
[MP4]
[Bit Rate/Resolution]
[24 Mbps 1920x1080]* or [Linked to MXF]**

* When the movie format is set to MP4.
** When the movie format is set to MXF+MP4.

Selecting the Frame Rate

When [Bit Rate/Resolution] is set to [35 Mbps 1440x1080] (MXF clips) or [35 Mbps 1920x1080] or [17 Mbps 1280x720] (MP4 clips), the frame rate is set automatically and cannot be changed.

1 Depending on the movie format selected, open the corresponding [Frame Rate] submenu to set the frame rate.

[Other Functions] ➤ [MXF] ➤ [Frame Rate] (MXF clips)

[Other Functions] ➤ [MP4] ➤ [Frame Rate] (MP4 clips)

2 Select the desired option and then press SET.

- The selected frame rate will appear on the upper right of the screen. When the movie format is set to MXF+MP4, only the bit rate/ resolution of MXF clips will appear on the screen.

[Other Functions] ➤ [MXF] ➤ [Frame Rate] ➤ [59.94i]

[Other Functions] ➤ [MP4] ➤ [Frame Rate] ➤ [29.97P]

NOTES

- For details about the video configuration of MP4 clips recorded when the movie format is set to MXF+MP4, refer to *Simultaneous Recording of MXF and MP4 Clips* (123).
- For details on the signal output from each terminal, refer to *Video Output Configuration* (159).

MXF clips: Available bit rate, resolution and frame rate settings

[Bit Rate/Resolution]		[Frame Rate]			
Bit rate*	Resolution	59.94i	59.94P	29.97P	23.98P
50 Mbps (CBR 4:2:2)	1920 x 1080	●	–	●	●
	1280 x 720	–	●	●	●
35 Mbps (VBR 4:2:0)	1920 x 1080	●	–	●	●
	1440 x 1080	●	–	–	–
	1280 x 720	–	●	●	●
25 Mbps (CBR 4:2:0)	1440 x 1080	●	–	●	●

* The first line indicates the bit rate (in Mbps); the second line indicates in parentheses whether the bit rate is constant (CBR) or variable (VBR), and the color sampling.

MP4 clips: Available bit rate, resolution and frame rate settings

[Bit Rate/Resolution]		Audio bit rate	[Frame Rate]		
Bit rate	Resolution		59.94P	29.97P	23.98P
35 Mbps	1920 x 1080	256 kbps	●	–	–
24 Mbps			–	●	●
17 Mbps	1280 x 720	128 kbps	●	–	–
9 Mbps			–	●	●
3 Mbps**	640x360		–	●	●

** Only when the movie format is set to MXF+MP4 (123).

Changing Main Camera Functions with the Joystick

You can adjust three main camera functions –shutter speed, white balance and gain– using only the joystick (direct setting mode). This section will explain the basic operation of the direct setting mode. For specific details about the functions please refer to the each function's section: shutter speed (📖 58), white balance (📖 69), gain (📖 62).

Operating modes: CAMERA MEDIA | MXF MXF+MP4 MP4

Using the Direct Setting Mode

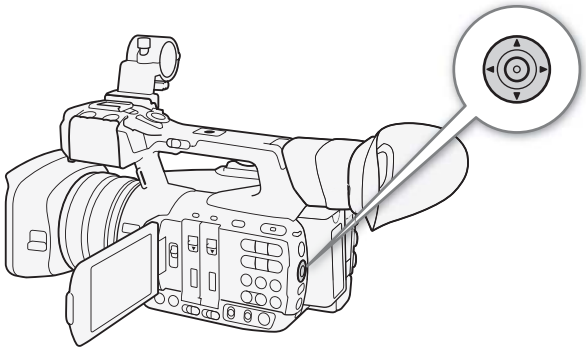

1 Press SET.
- The onscreen display of the function to be adjusted will be highlighted in orange.
- Push the joystick left/right to change the function to be adjusted. Pushing the joystick to the right will cycle through the options in the following order: White balance → White balance preset fine tuning/color temperature setting[1] → Gain mode → Gain value[2] → Shutter speed mode[3] → Shutter value[2, 3] → White balance

  [1] Only when the white balance mode is set to preset white balance or color temperature.
  [2] Only during manual adjustment mode.
  [3] Only when the SHUTTER switch is set to ON.

2 Push the joystick up/down to change the selected mode or select the desired value and then press SET.
- The selected mode/value will be set and the camcorder will exit the direct setting mode.
- Depending on the function selected, additional adjustment may be possible or necessary before pressing SET.

NOTES
- The direct setting mode will end automatically if no operation is performed for about 6 seconds or if you open the menu or a status screen.

Shutter Speed

Set the shutter speed based on the recording conditions. For example, you may want to set slower shutter speeds in darker environments. The camcorder offers the following 6 modes.

Operating modes: CAMERA MEDIA | MXF MXF+MP4 MP4

OFF: The camcorder uses a standard shutter speed based on the frame rate. To turn off the shutter adjustment and use the standard shutter speed, set the SHUTTER switch to OFF.

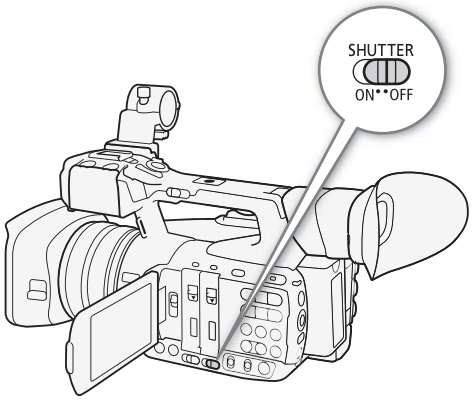

[Automatic]: The camcorder automatically adjusts the shutter speed based on the picture's brightness. This mode is not available during slow & fast motion recording mode.

[Speed]: Allows you to set the shutter speed (in fractions of a second). You can select the shutter speed increment between normal and fine.

[Angle]: You can set the shutter angle to determine the shutter speed.

[Clear Scan]: Set the frequency in order to record CRT computer monitors without displaying black bands or flicker on the screen.

[Slow]: You can set slower shutter speeds to obtain brighter recordings in places with insufficient lighting. This mode is not available during slow & fast motion recording mode.

Available shutter speeds

The available shutter speeds vary depending on the frame rate.

Shutter speed mode		Frame rate		
		59.94i / 59.94P	29.97P	23.98P
OFF		1/60	1/30	1/24
[Automatic][1]		1/60 to 1/500	1/30 to 1/500	1/24 to 1/500
	During infrared mode	1/60 to 1/100	1/30 to 1/100	1/24 to 1/100
	During infrared mode with slow shutter[2]	1/30 to 1/100	1/15 to 1/100	1/12 to 1/100
[Speed][3]		1/60, 1/75, 1/90, 1/100, 1/120, 1/150, 1/180, 1/210, 1/250, 1/300, 1/360, 1/420, 1/500, 1/600, 1/720, 1/840, 1/1000, 1/1200, 1/1400, 1/1700, 1/2000	1/30, 1/34, 1/40, 1/48, 1/50, 1/60, 1/75, 1/90, 1/100, 1/120, 1/150, 1/180, 1/210, 1/250, 1/300, 1/360, 1/420, 1/500, 1/600, 1/720, 1/840, 1/1000, 1/1200, 1/1400, 1/1700, 1/2000	1/24, 1/25, 1/30, 1/34, 1/40, 1/48, 1/50, 1/60, 1/75, 1/90, 1/100, 1/120, 1/150, 1/180, 1/210, 1/250, 1/300, 1/360, 1/420, 1/500, 1/600, 1/720,1/840, 1/1000, 1/1200, 1/1400, 1/1700, 1/2000
[Angle][4]		360°, 240°, 216°, 180°, 120°, 90°, 60°, 45°, 30°, 22.5°, 15°, 11.25°	360°, 240°, 216°, 180°, 120°, 108°, 90°, 60°, 45°, 30°, 22.5°, 15°, 11.25°	360°, 345.6°, 288°, 240°, 180°, 172.8°, 144°, 120°, 90°, 86.4°, 72°, 60°, 45°, 30°, 22.5°, 15°, 11.25°
[Clear Scan][4]		59.94 Hz to 250.51 Hz	29.97 Hz to 250.51 Hz	23.98 Hz to 250.51 Hz
[Slow][1]		1/4, 1/8, 1/15, 1/30	1/4, 1/8, 1/15	1/3, 1/6, 1/12

[1] Not available during slow & fast motion recording mode.
[2] [Camera Setup] [Infrared] [Slow Shutter] set to [On].
[3] When [Camera Setup] [Shutter] [Shutter Increment] is set to [Normal]. When [Shutter Increment] is set to [Fine], you can adjust the shutter speed in increments of up to 1/256 stop.
[4] During slow & fast motion recording mode, available values will vary depending on the selected shooting frame rate.

Automatic Shutter

Using the Joystick

1 Set the SHUTTER switch to ON.

2 Press SET and push the joystick left/right until the shutter speed mode icon is highlighted in orange.

3 Push the joystick up/down to select the A icon and then press SET.

- The shutter speed will be set automatically.

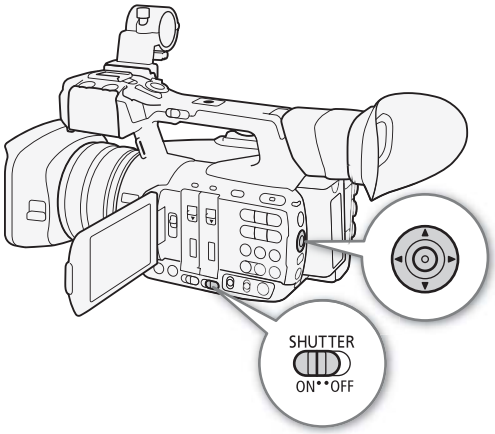

NOTES

- You can also set [Camera Setup] [Shutter] [Mode] to [Automatic]. Additionally, if you set an assignable button to [Shutter Mode] (129), you can press the button to change the shutter speed mode between manual and automatic.

Remote Operation Using Browser Remote

After completing the necessary preparations (182), you can change the shutter speed mode remotely from a connected device using the Browser Remote application.

1 Press the shutter speed mode button on the Browser Remote screen.

2 Select [Auto].

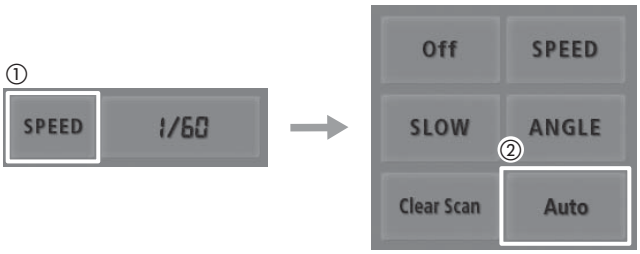

Manual Shutter

When the shutter speed mode is set to manual, you can select to adjust the shutter as a shutter speed, angle value, clear scan frequency or slow shutter speed according to your shooting needs.

Changing the Shutter Speed Mode and Value

1 Set the SHUTTER switch to ON.

2 Open the shutter [Manual] submenu.

[Camera Setup] [Shutter] [Manual]

3 Select the desired mode and then press SET.

- If you selected [Speed] (the default value), you can select the increment scale to use when adjusting the shutter speed; otherwise, skip to step 6.

4 Open the [Shutter Increment] submenu.

[Camera Setup] [Shutter] [Shutter Increment]

5 Select [Normal] or [Fine] and then press SET.

- If you select [Fine], you can adjust the shutter speed in increments of up to 1/256 step.

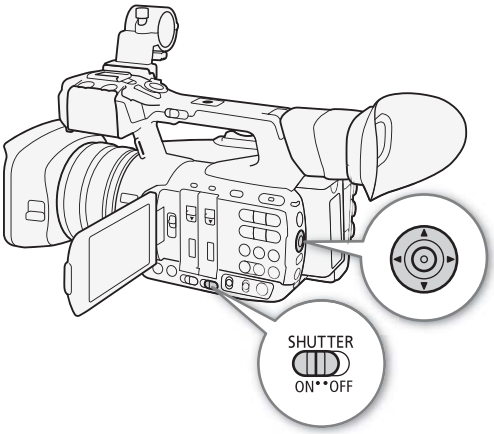

6 Close the menu and change the shutter speed mode to manual using the direct setting mode.

- Press SET and push the joystick left/right until the shutter speed mode icon is highlighted in orange, select the M icon and press SET. For details refer to *Using the Direct Setting Mode* (57).

7 Adjust the shutter speed, angle value or clear scan frequency using the direct setting mode.

- Press SET and push the joystick left/right until the shutter value is highlighted in orange, select the desired value and then press SET. For details refer to *Using the Direct Setting Mode* (57).
- If in step 3 you selected [Clear Scan], adjust the frequency so that black bands do not appear on the screen.

[Camera Setup]
[Shutter]
[Manual]
[Speed]

[Camera Setup]
[Shutter]
[Shutter Increment]
[Normal]

NOTES

- If you set an assignable button to [Shutter Increment] (129), you can press the button to change the shutter increment (steps 4-5). Additionally, if you set an assignable button to [Shutter Mode], you can press the button to change the shutter speed mode between manual and automatic (step 6).

Remote Operation Using Browser Remote

After completing the necessary preparations (182), you can adjust the shutter speed remotely from a connected device using the Browser Remote application.

1 Press the shutter speed mode button on the Browser Remote screen.

2 Select the desired mode.

3 Press the current shutter speed, angle value or clear scan frequency and select the desired value from the list.

- You may need to scroll up/down to see all the available values.
- The selected value will be displayed on the Browser Remote screen and will be applied on the camcorder.

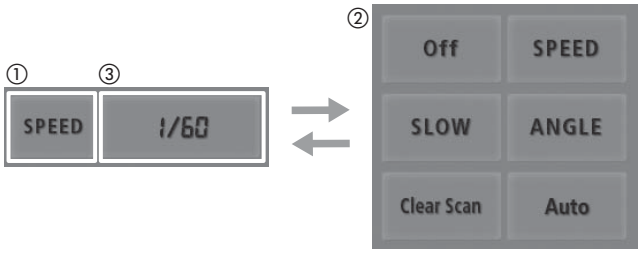

Using Slow Shutter Mode

When recording in dark surroundings, you can obtain a brighter picture by using slow shutter mode. You can also use this mode when you wish to add certain effects to your recordings, such as blurring the background during panning shots or recording a moving subject with an afterimage trail.

- Image quality may not be as good as when using faster shutter speeds in brighter surroundings.
- Autofocus may not work well.

NOTES

- Closing down the aperture when recording under bright conditions may cause the picture to appear soft or out of focus. To avoid the loss of sharpness due to diffraction, use a faster shutter speed or open up the aperture (📖 65).
- When the gain and aperture are set to manual and the shutter speed mode is not set to [Automatic], the exposure bar will appear on the screen (📖 67).
- When you set the camcorder to infrared mode (📖 126), the shutter speed mode will be set to automatic. If you set the camcorder to slow & fast motion recording and infrared mode at the same time, the shutter speed mode will be set to OFF.
- When an optional RC-V100 Remote Controller is connected to the camcorder, you can change the shutter speed mode with the remote controller's SHUTTER SELECT button, regardless of the position of the camcorder's SHUTTER switch.

Flicker Reduction

[🎥 Camera Setup] ▽ [Flicker Reduction] ▽ [Off]

You can perform the following procedure to have the camcorder automatically detect and reduce flicker.

1 Open the [Flicker Reduction] submenu.
[🎥 Camera Setup] ➤ [Flicker Reduction]

2 Select [Automatic] and then press SET.

NOTES

- When recording under artificial light sources such as fluorescent, mercury or halogen lamps, the screen may flicker depending on the shutter speed. You may be able to avoid flicker by setting the shutter speed mode to [Speed] and the shutter speed to a value matching the frequency of the local electrical system: 1/50* or 1/100 for 50 Hz systems, 1/60 or 1/120 for 60 Hz systems.

* May not be available depending on the frame rate.

Gain

Depending on the shooting conditions you may want to adjust the brightness of the image. You can do so by changing the gain value to adjust the sensitivity of the sensor. The camcorder offers 3 independently adjustable gain levels (L/M/H), for each of which you can select automatic gain (including the option to limit the maximum gain value) or manual gain control.

Operating modes: CAMERA MEDIA | MXF MXF+MP4 MP4

Available gain settings

Increment	Gain
3 dB	-6 dB*, -3 dB*, 0 dB, 3 dB, 6 dB, 9 dB, 12 dB, 15 dB, 18 dB, 21 dB, 24 dB, 27 dB, 33 dB*
0.5 dB (when [Fine Tuning] is selected)	-6 dB to -0.5 dB*, 0 dB to 27 dB

* These values cannot be selected when the [Gamma] setting in the custom picture file (📖 135) is set to [Wide DR].

Selecting the Gain Level

You can set beforehand 3 gain levels (including automatic gain control) and then select quickly which one to apply simply by changing the position of the GAIN switch.

Set the GAIN switch to the position you want to adjust (L, M or H).

- L, M or H and the gain value currently assigned to that position will be displayed on the screen.

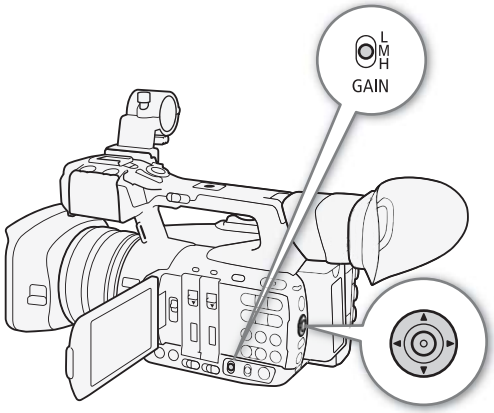

Automatic Gain Control (AGC)

Using the Joystick

1 Press SET and push the joystick left/right until the gain mode icon is highlighted in orange.

2 Push the joystick up/down to select the A icon and then press SET.

- The current position of the GAIN switch will be set to automatic gain control.

NOTES

- You can also set the respective [Mode] setting ([Camera Setup] [Gain] [L], [M] or [H] [Mode]) to [Automatic]. Additionally, if you set an assignable button to [Gain Mode] (📖 129), you can press the button to change the gain mode of the currently selected gain position between manual and automatic.

Remote Operation Using Browser Remote

After completing the necessary preparations (📖 182), you can change the gain mode of the currently selected gain position remotely from a connected device using the Browser Remote application.

1 Press the gain mode button on the Browser Remote screen.

2 Select [Auto].

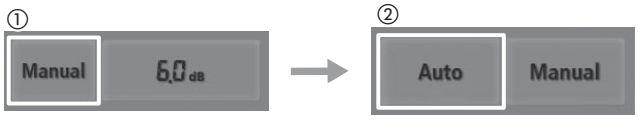

Setting the Gain Limit (AGC Limit)

For each gain position, you can activate the gain limit to prevent the camcorder from setting a level higher than a preset limit between 0 dB and 27 dB. When you set the camcorder to full auto mode (📖 49) or infrared mode (📖 126), [AGC Limit] will be set to [Off/27 dB].

1 Open the [AGC Limit] submenu.
[🎥 Camera Setup] ➤ [Gain] ➤ [L], [M] or [H] ➤ [AGC Limit]

2 Select the desired level and then press SET.

[🎥 Camera Setup]
▽
[Gain]
▽
[L], [M] or [H]
▽
[AGC Limit]
▽
[Off/27 dB]

Manual Gain

Using the Joystick

1 Change the gain mode to manual using the direct setting mode.
- Press SET and push the joystick left/right until the gain mode icon is highlighted in orange, select the Ⓜ icon and press SET. For details refer to *Using the Direct Setting Mode* (📖 57).
- The current position of the GAIN switch will be set to manual gain.

2 Adjust the gain value using the direct setting mode.
- Press SET and push the joystick left/right until the gain value is highlighted in orange, select the desired value and then press SET. For details refer to *Using the Direct Setting Mode* (📖 57).

ⓘ NOTES
- You can also select the gain value from the respective [Manual] setting ([🎥 Camera Setup] ➤ [Gain] ➤ [L], [M] or [H] ➤ [Manual]). Using the menu, you can also select [Fine Tuning] and then select a gain level between -6.0 dB and 24.0 dB in 0.5 dB increments. Once you have selected [Fine Tuning] in the menu, you can then adjust the gain value in 0.5-dB increments also using the direct setting mode.

Remote Operation Using Browser Remote

After completing the necessary preparations (📖 182), you can adjust the gain value of the currently selected gain position remotely from a connected device using the Browser Remote application.

1 Press the gain mode button on the Browser Remote screen and then select [Manual].

2 Press the current gain value and select the desired value from the list.
- You may need to scroll up/down to see all the available values.
- The selected value will be displayed on the Browser Remote screen and will be applied on the camcorder.

NOTES

- When the gain and aperture are set to manual and the shutter speed mode is not set to [Automatic], the exposure bar will appear on the screen (67).
- When high gain levels are set, the picture may flicker slightly. Additionally, uneven color, noise (white dots) and vertical stripes and other artifacts are more likely to appear.
- When you set the camcorder to infrared mode (126), the gain mode will be set to automatic gain control.
- You can use the [Other Functions] [Custom Function] [Shockless Gain] setting (141) for a smooth transition when changing the position of the GAIN switch.
- When an optional RC-V100 Remote Controller is connected to the camcorder, you can adjust the gain value corresponding to the current position of the GAIN switch (L, M or H) with the remote controller's ISO/GAIN ▲/▼ buttons.

Aperture

You can affect the brightness of your recordings or change the depth of field by adjusting the aperture. For example, use a small aperture value for a shallow depth of field that isolates the subject in focus and nicely blurs the background. You can have the camcorder adjust the aperture automatically or you can adjust it manually to have more control over your recording.

Operating modes: CAMERA MEDIA | MXF MXF+MP4 MP4

Available aperture values

Aperture Mode (IRIS (ND) switch)	Aperture Value	
		Only when [Iris Limit]* is set to [Off]
A (automatic)	F1.8 to F16	–
M (manual)	F1.8, F2.0, F2.2, F2.4, F2.6, F2.8, F3.2, F3.4, F3.7, F4.0, F4.4, F4.8, F5.2, F5.6, F6.2, F6.7, F7.3, F8.0	F8.7, F9.5, F10, F11, F12, F14, F15, F16, CLOSE

* [Other Functions] [Custom Function] [Iris Limit].

Automatic Aperture

Set the IRIS (ND) switch to A.

- A will appear on the screen next to the aperture value.

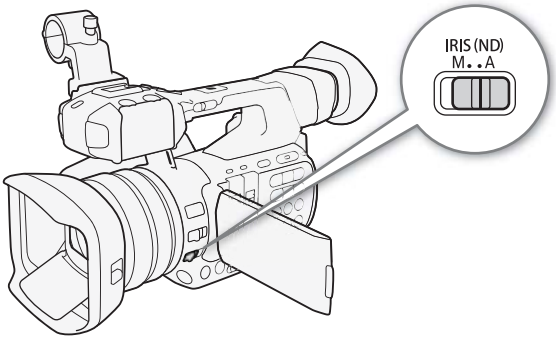

NOTES

- You can use the [Other Functions] [Custom Function] [AE Response] setting (141) to change how quickly the aperture changes during automatic aperture mode.

Remote Operation Using Browser Remote

After completing the necessary preparations (182), you can change the aperture mode remotely from a connected device using the Browser Remote application.

1 Press the aperture mode button on the Browser Remote screen.

2 Select [Auto].

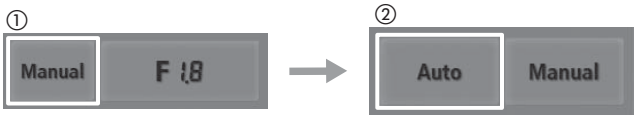

Manual Aperture

Using the Iris Ring

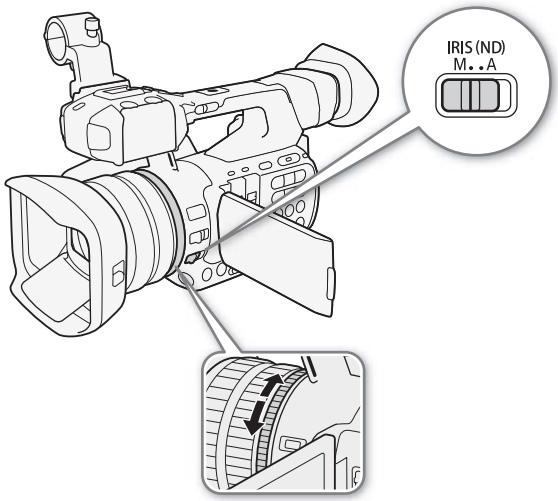

1 Set the IRIS (ND) switch to M.
- M will appear on the screen next to the aperture value.

2 Turn the iris ring to adjust the aperture.
- The aperture value displayed on the screen will change in 1/4-stop increments.

Remote Operation Using Browser Remote

After completing the necessary preparations (182), you can adjust the aperture value remotely from a connected device using the Browser Remote application.

1 Press the aperture mode button on the Browser Remote screen and then select [Manual].

2 Press the current aperture value on the Browser Remote screen and select the desired aperture value from the list.
- You may need to scroll up/down to see all the available values.
- Alternatively, you can press [IRIS (ND) +] to open the aperture or [IRIS (ND) -] to close the aperture in 1/16-stop increments. (Onscreen displays will show the closest 1/4-stop aperture value.)
- The selected value will be displayed on the Browser Remote screen and will be applied on the lens.

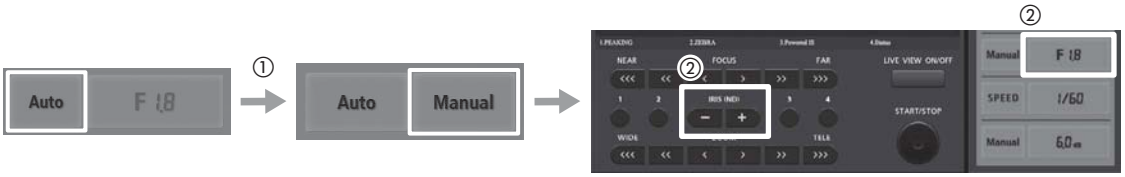

NOTES

- When the gain and aperture are set to manual and the shutter speed mode is not set to [Automatic], the exposure bar will appear on the screen (67).
- The aperture value set manually will not be retained when you switch to automatic aperture (with the exception of full auto mode). Instead, the aperture value set automatically by the camcorder will be used when you switch back to manual aperture control.
- If the ND filter is activated, the picture may become dark when you set a high aperture value. In such case, set [Camera Setup] ➤ [ND Filter] to [Off] and readjust the aperture.
- You can use the [Other Functions] ➤ [Custom Function] ➤ [Iris Ring Direction] setting (141) to change the direction of the adjustment when you turn the iris ring.
- When an optional RC-V100 Remote Controller is connected to the camcorder, you can adjust the aperture with the remote controller's IRIS dial. At default settings, turn the dial right to open up the aperture (smaller F value) and left to close the aperture (larger F value).
- You can use the [Other Functions] ➤ [Custom Function] ➤ [Iris Limit] setting (141) to prevent the aperture from closing below the diffraction limit of the lens (F8.0). When it is on, the maximum aperture value is [F8.0]. When it is off, you can fully close the aperture but aperture values that exceed the diffraction limit will appear in gray. Using aperture values displayed in gray will cause diffraction blur.

ND Filter

At default settings, the camcorder's ND filter is activated automatically depending on the aperture value. The ND filter is first activated when you close down the aperture to F4.0 ([ND 1/2] will appear on the screen). As you close down the aperture further, the ND filter will change to [ND 1/4] and then to [ND 1/8] for aperture values above F4.4.
If you prefer not to use the ND filter, you can turn it off with the following procedure.

1 Open the [ND Filter] submenu.
[Camera Setup] [ND Filter]

2 Select [Off] and then press SET.

[Camera Setup]
[ND Filter]
[Automatic]

Remote Operation Using Browser Remote

After completing the necessary preparations (182), you can change the ND filter mode remotely from a connected device using the Browser Remote application.

1 Press [ND Off] on the Browser Remote screen to turn off the ND filter.

2 Press [ND Auto] to return the camcorder to automatic ND filter mode.

Exposure Compensation - AE Shift

Use AE shift to compensate the exposure that was set using automatic aperture, in order to darken or lighten the image. You can select from 17 available AE shift levels.
AE shift is not available when the camcorder is set to full auto mode (49).

1 Open the [AE Shift] submenu.
[Camera Setup] [AE Shift]

2 Select an AE shift level and then press SET.
- The selected AE shift level will be displayed above the exposure bar and the camcorder will attempt to adjust the exposure accordingly.

[Camera Setup]
[AE Shift]
[±0]

Available AE Shift Levels

+2.0	+1.75	+1.5	+1.25	+1.0	+0.75	+0.5	+0.25	±0
-0.25	-0.5	-0.75	-1.0	-1.25	-1.5	-1.75	-2.0	

The Exposure Bar

When the gain and aperture are both set to manual mode and the shutter speed is set to a mode other than auto, the exposure bar will appear, giving you an indication of the current exposure. The ▼ on top of the exposure bar indicates optimal exposure without any shift (AE±0) and the indicator inside the exposure bar represents the current exposure.

When the difference between current and optimal exposure is larger than ±2 EV, the indicator will flash at the edge of the exposure bar.

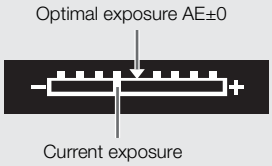

Light Metering Mode

Select the light metering mode to match the recording conditions. Using the appropriate setting will ensure that the camcorder obtains the most suitable exposure level when either the aperture, shutter speed or gain is set automatically by the camcorder.

1 Open the [Light Metering] submenu.

[Camera Setup] [Light Metering]

2 Select the desired option and then press SET.

- The icon of the selected mode appears on the left of the screen.

[Camera Setup]

[Light Metering]

[Standard]

Options

[Backlight] : Suitable when recording backlit scenes.

[Standard]: Averages the light metered from the entire screen, giving more weight to the subject in the center.

[Spotlight] : Use this option when recording a scene in which only a certain part of the picture is lit, for example, when the subject is lit by a spotlight.

NOTES

- If you set an assignable button to [Backlight] or [Spotlight] (129), you can press the button to change the light metering mode.

White Balance

The camcorder uses an electronic white balance process to calibrate the picture and ensure accurate colors under different lighting conditions. There are 4 methods of setting the white balance.

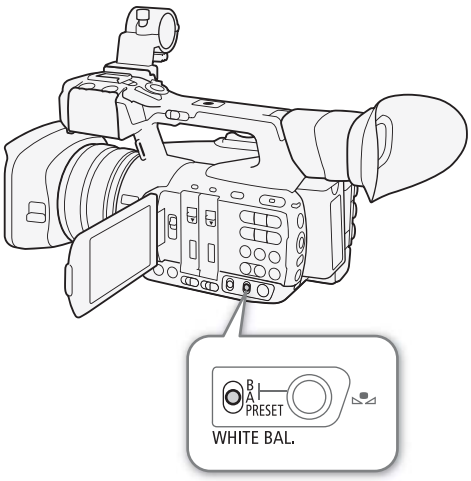

Auto white balance (AWB): The camcorder automatically adjusts the white balance to the optimal level. This method can be assigned to any of the three positions of the WHITE BAL. switch.

Preset white balance: Set the white balance to ☀ (daylight) or ☀ (incandescent lamp). Preset white balance settings can be further fine-tuned within a range of -9 to 9. This method can only be used when the WHITE BAL. switch is set to PRESET.

Set color temperature: Allows you to set the color temperature between 2,000 K and 15,000 K. This method can only be used when the WHITE BAL. switch is set to PRESET.

Custom white balance: You can use a white object to establish the white balance and set it to one of two custom white balance positions, A or B. These correspond, respectively, to positions A and B of the WHITE BAL. switch.

When recording under fluorescent lights, we recommend using auto white balance or setting the custom white balance.

Operating modes: CAMERA MEDIA | MXF MXF+MP4 MP4

NOTES

- The [Color Matrix] and [White Balance] settings in the custom picture file (139) take precedence over the white balance settings.
- You can use the [Other Functions] [Custom Function] [Shockless WB] setting (141) to make the transition look smoother when you change the white balance settings.
- When an optional RC-V100 Remote Controller is connected to the camcorder, you can adjust the white balance with the remote controller's AWB button, A button, B button, PRESET button and button.

Auto White Balance (AWB)

The camcorder constantly adjusts the white balance automatically to achieve an optimal level. The camcorder will adjust the white balance if the light source changes.

Using the Joystick

1 Set the WHITE BAL. switch to the position you want to use for auto white balance (A, B or PRESET).

2 Press SET and push the joystick left/right until the white balance icon is highlighted in orange.

3 Push the joystick up/down to select the AWB icon and then press SET.

- The white balance will be adjusted automatically. The current color temperature will be displayed next to the AWB icon.

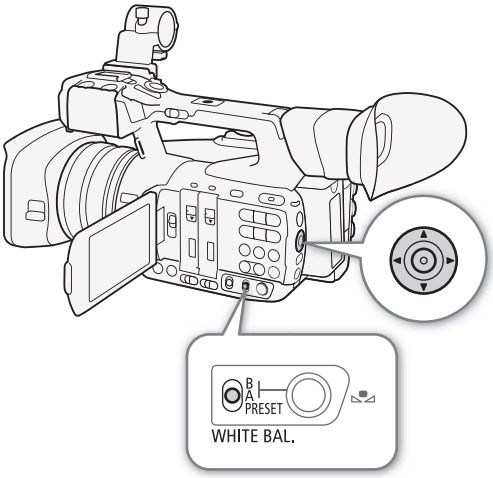

Remote Operation Using Browser Remote

After completing the necessary preparations (📖 182), you can change the white balance mode of the currently selected WHITE BAL. switch position remotely from a connected device using the Browser Remote application.

1 Press the white balance mode button on the Browser Remote screen.

2 Select [Auto].

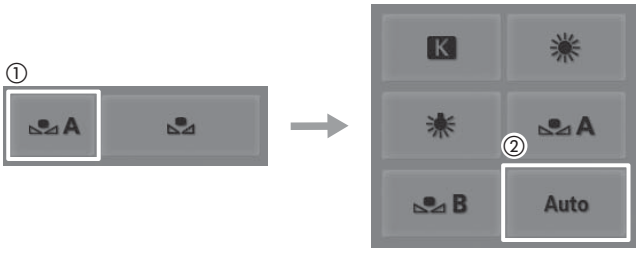

NOTES

- Custom white balance may provide better results in the following cases:
  - Changing lighting conditions
  - Close-ups
  - Subjects in a single color (sky, sea or forest)
  - Under mercury lamps and certain types of fluorescent/LED lights
- You can also set the respective setting ([Camera Setup] ➤ [White Balance] ➤ [A], [B] or [Camera Setup] ➤ [White Balance] ➤ [PRESET] ➤ [Mode]) to [AWB]. Additionally, if you set an assignable button to [WB Mode] (📖 129), you can press the button to change the white balance mode of the currently selected position of the WHITE BAL. switch.

Preset White Balance/Color Temperature

The camcorder features two preset white balance settings for recording outdoors (daylight) and indoors (incandescent light). These preset settings can be fine-tuned between -9 and +9. Alternatively, you can specify the desired color temperature between 2,000 K and 15,000 K in 100 K increments.

Using the Joystick

1 Open the PRESET's [Mode] submenu to select the white balance adjustment mode.
[Camera Setup] ➤ [White Balance] ➤ [PRESET] ➤ [Mode]

2 Select [Preset] and then press SET.

3 Back in the [PRESET] submenu, select [Preset] and then press SET to select the white balance mode assigned to the PRESET position.

4 Select [Daylight], [Tungsten] or [Kelvin], press SET and then press MENU to close the menu.

5 Set the WHITE BAL. switch to PRESET.
- The icon of the selected white balance mode will appear on the screen.

6 Press SET and push the joystick left/right until the white balance icon is highlighted in orange.

7 While the selected icon is highlighted in orange, push the joystick to the right.
- If you selected [Daylight] or [Tungsten], the adjustment value [±0] will appear next to the icon, highlighted in orange.
- If you selected [Kelvin], the color temperature value [5500 K] will appear next to the K icon, highlighted in orange.

8 Push the joystick up/down to fine tune the preset setting or set the desired color temperature and then press SET.
- The selected adjustment value/color temperature will be set and the camcorder will exit the direct setting mode.

[Camera Setup]
[White Balance]
[PRESET]
[Mode]
[Preset]

[Camera Setup]
[White Balance]
[PRESET]
[Preset]
[Daylight]

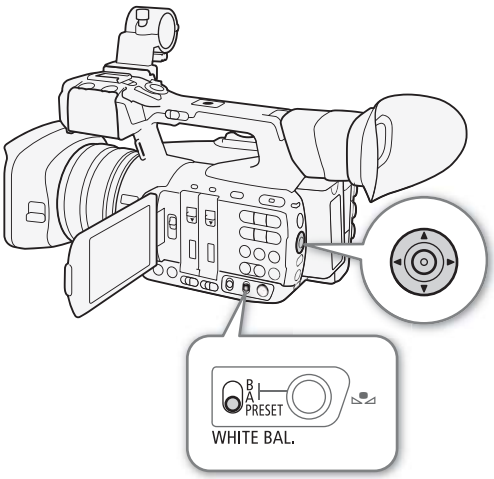

Remote Operation Using Browser Remote

After completing the necessary preparations (📖 182), you can adjust the white balance remotely from a connected device using the Browser Remote application.

1 Press the white balance mode button on the Browser Remote screen.

2 Select [☀], [☀] or [K].

3 Press the adjustment value [WB ±0] (☀, ☀) or color temperature [5500K] (K) and then select the desired value from the list.
- You may need to scroll up/down to see all the available values.
- The selected value will be displayed on the Browser Remote screen and will be applied on the camcorder.

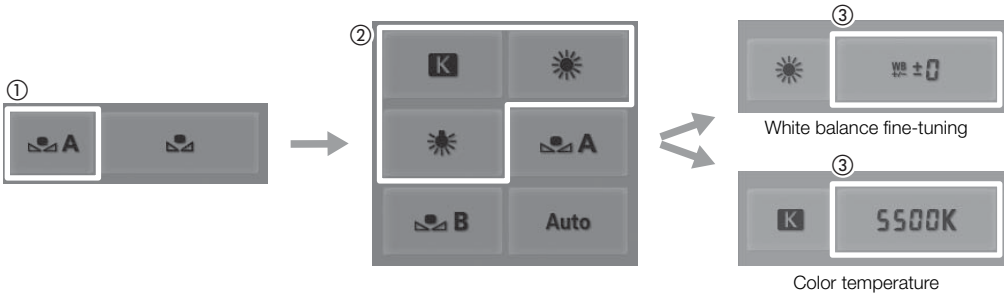

Custom White Balance

You can store two custom white balance settings in the camcorder for recording under more difficult lighting conditions.

Using the Joystick

1 Set the WHITE BAL. switch to A or B.

2 Press SET and push the joystick left/right until the white balance icon is highlighted in orange.

3 Push the joystick up/down to select [A] or [B], depending on the position of the WHITE BAL. switch.

- To apply the stored custom white balance setting as it is, press SET. The rest of the procedure is not necessary.
- If a custom white balance has not yet been stored, the white balance icon (A or B) and default value (5,500 K) will flash slowly. To establish the custom white balance, continue the procedure.

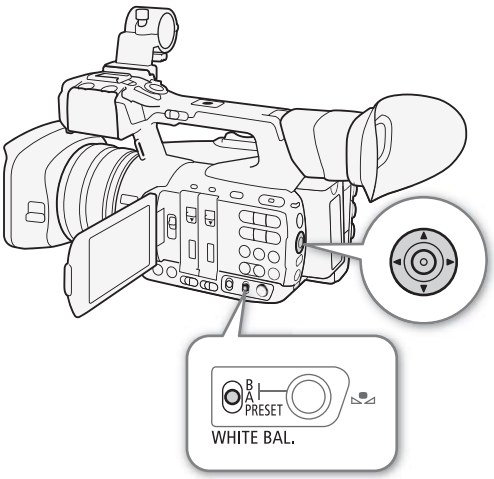

4 Point the camcorder at a white object so that it fills the whole screen.

- Use the same lighting conditions you plan to use when recording.

5 Press the button.

- The white balance icon (A or B) will flash quickly.
- Make sure the white object fills the screen until the procedure is completed.
- After the white balance icon stops flashing, the procedure is completed. The setting is retained even if you turn off the camcorder.

Remote Operation Using Browser Remote

After completing the necessary preparations (182), you can set the custom white balance remotely from a connected device using the Browser Remote application.

1 Press the white balance mode button on the Browser Remote screen.

2 Select [A] or [B].

3 Point the camcorder at a white object so that it fills the whole screen.

- Use the same lighting conditions you plan to use when recording.
- Make sure the white object fills the screen until the procedure is completed.

4 Press [ ].

- If a custom white balance has not yet been stored, [ ] will flash slowly.
- During the procedure, [ ] will flash quickly. When it stops flashing, the procedure is completed and the setting will be applied on the camcorder.

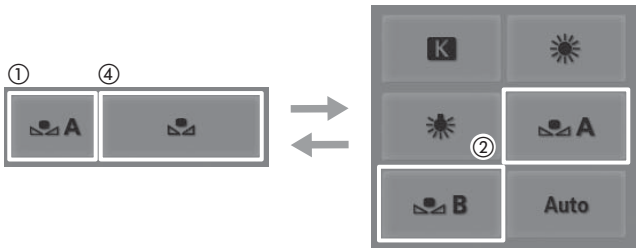

NOTES

- **Using the custom white balance setting:**
  - Set [Camera Setup] [Zoom] [Mode] to [Normal].
  - Readjust the custom white balance if the light source changes.
  - Very rarely and depending on the light source, may keep flashing (it will change to a slow flashing). The result will still be better than with the auto white balance.

Zooming

You can operate the zoom (optical zoom 20x) using the zoom rocker on the side grip or the one on the handle. You can also use the zoom ring on the lens or the zoom buttons on the supplied wireless controller.

In addition to the optical zoom, you can use the digital zoom* to extend the zoom range to 120x, or digital tele-converter** function to increase the focal length by a factor of approximately 1.5, 3 or 6.

* In the range beyond the optical zoom (20x to 120x), the image is processed digitally affecting image quality.
** The image is processed digitally throughout the zoom range affecting image quality.

Operating modes: CAMERA MEDIA | MXF MXF+MP4 MP4

Selecting the Zoom Mode

1 Open the zoom's [Mode] submenu.
[Camera Setup] [Zoom] [Mode]

2 Select the desired option and then press SET.

[Camera Setup]
[Zoom]
[Mode]
[Normal]

Options

[Tele-converter 6.0x], [Tele-converter 3.0x], [Tele-converter 1.5x]: The camcorder processes the image digitally to multiply the focal length by a factor of 6, 3 or 1.5, respectively.

[Digital Zoom]: The camcorder uses the optical zoom up to 20x and processes the image digitally after that, up to a magnification ratio of 120x.

[Normal]: The camcorder uses only the optical zoom up to 20x.

When you operate the zoom, a zoom indicator* will appear on the screen that shows the approximate zoom position. The white area of the zoom bar indicates the optical zoom range and the blue area** indicates the digital zoom range.

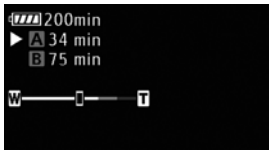

* You can use the [Other Functions] [Custom Function] [Zoom Indicator] setting (141) to set the zoom indicator to a numerical display.
** Only when [Camera Setup] [Zoom] [Mode] is set to [Digital Zoom].

NOTES

- You can set [Camera Setup] [Wide-End Angle] to [Wider] to make the focal length at the wide-angle end of the zoom range even shorter (approximately 26.8 mm, 35mm-equivalent) and enjoy a wider angle of view. If you set an assignable button to [Wide-End Angle] (129), you can press the button to switch between the [Normal] and [Wider] settings.
- You can attach the TL-H58 Tele-converter or WA-H58 Wide Attachment (both optional) to the camcorder (80). You can even use the TL-H58 in combination with the digital zoom and digital tele-converter functions.
- If you set an assignable button to [Tele-converter] (129), you can press the button to activate the digital tele-converter and select the magnification factor. If you set an assignable button to [Digital Zoom] (129), you can press the button to turn the digital zoom on/off.
- When an optional RC-V100 Remote Controller is connected to the camcorder, if the zoom mode is set to one of the [Tele-converter] options, the remote controller's EXTENDER indicator will light up.
- When [Camera Setup] [Conversion Lens] is set to [WA-H58], the digital zoom and digital tele-converter options are not available.

Using the Zoom Ring

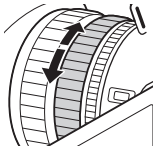

Zoom in and out on a subject by turning the zoom ring. The zoom speed depends on how fast you turn the zoom ring.

NOTES

- You can change the direction of the adjustment and the sensitivity of the response of the zoom ring using the [Other Functions] [Custom Function] [Zoom Ring Direction] and [Zoom Ring Control] settings (141).

Using the Zoom Rockers on the Camcorder

Using the Grip Zoom Rocker

Use the settings in the [Camera Setup] [Zoom] submenu to set the zoom speed. When you select a constant zoom speed, set one of 16 constant speeds (1 is the slowest, 16 the fastest). With a variable zoom speed, press gently for a slow zoom; press harder for faster zooms.

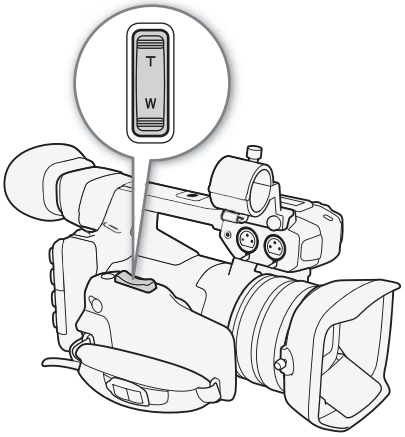

Move the zoom rocker toward **W** to zoom out (wide-angle) and toward **T** to zoom in (telephoto).

Setting the Zoom Speed

Refer to the following table for approximate zoom speeds of the entire zoom range (end to end).

1 Open the zoom [Speed Level] submenu.
[Camera Setup] ➤ [Zoom] ➤ [Speed Level]

2 Select [Fast], [Normal] or [Slow] and then press SET.

3 Open the grip rocker [Select] submenu.
[Camera Setup] ➤ [Zoom] ➤ [Grip Rocker] ➤ [Select]

4 Select [Constant] or [Variable] and then press SET.

[Camera Setup] ➤ [Zoom] ➤ [Speed Level] ➤ [Normal]

[Camera Setup] ➤ [Zoom] ➤ [Grip Rocker] ➤ [Select] ➤ [Variable]

To set the speed level for [Constant]

5 Open the grip rocker [Constant Speed] submenu.
[Camera Setup] ➤ [Zoom] ➤ [Grip Rocker] ➤ [Constant Speed]

6 Select the desired level and then press SET.

[Camera Setup] ➤ [Zoom] ➤ [Grip Rocker] ➤ [Constant Speed 8]

Grip zoom rocker: Approximate zoom speeds (time required to zoom end-to-end)

[Grip Rocker] settings		[Speed Level] setting		
[Select]	[Constant Speed]	[Slow]	[Normal]	[Fast]
[Constant]	[1] (slowest)	4 min. 45 sec.	3 min.	1 min.
	[16] (fastest)	4.0 sec.	2.5 sec.	1.7 sec.*
[Variable]	–	4.0 sec. to 4 min. 45 sec.	2.5 sec. to 3 min.	1.7 sec.* to 1 min.

* When the zoom speed is too fast (approx. 1.7 seconds end-to-end), the camcorder will have more trouble focusing automatically while zooming.

NOTES

- When [Camera Setup] ➤ [Zoom] ➤ [High-Speed Zoom] is set to [On] and the grip rocker's zoom speed is set to [Variable], when you operate the zoom in record pause mode, the actual zoom speed will be as if [Camera Setup] ➤ [Zoom] ➤ [Speed Level] were set to [Fast]. While recording, the zoom speed level will follow the speed level setting set in the menu.

Using the Handle Zoom Rocker

Use the ZOOM SPEED switch and the settings in the [Camera Setup] ➤ [Zoom] submenu to set the zoom speed.

Move the zoom rocker toward **W** to zoom out (wide-angle) and toward **T** to zoom in (telephoto).

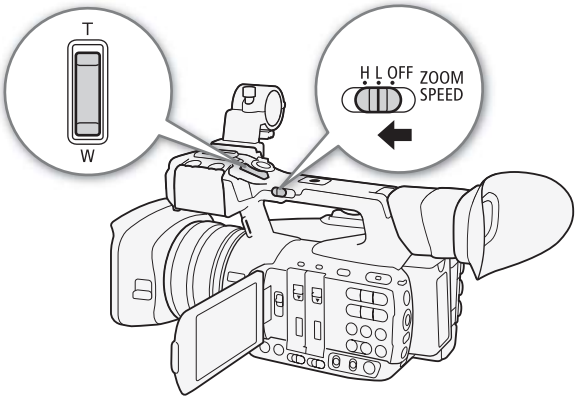

Setting the Zoom Speed

Refer to the following table for approximate zoom speeds of the entire zoom range (end to end).

1 Open the zoom [Speed Level] submenu.

[Camera Setup] ➤ [Zoom] ➤ [Speed Level]

2 Select [Fast], [Normal] or [Slow] and then press SET.

3 Open the zoom [Handle Rocker] submenu.

[Camera Setup] ➤ [Zoom] ➤ [Handle Rocker H] or [Handle Rocker L].

- You can set the zoom speed independently for each of the positions of the ZOOM SPEED switch.

4 Select the desired level and then press SET.

5 Set the ZOOM SPEED switch to H or L.

- You can set the ZOOM SPEED switch to OFF to deactivate the zoom rocker on the handle.

[Camera Setup]
[Zoom]
[Speed Level]
[Normal]

[Camera Setup]
[Zoom]
[Handle Rocker H 16]
[Handle Rocker L 8]

Handle zoom rocker: Approximate zoom speeds (time required to zoom end-to-end)

[Handle Rocker H]/[Handle Rocker L] setting	[Speed Level] setting		
	[Slow]	[Normal]	[Fast]
[1] (slowest)	4 min. 45 sec.	3 min.	1 min.
[16] (fastest)	4.0 sec.	2.5 sec.	1.7 sec.*

* When the zoom speed is too fast (approx. 1.7 seconds end-to-end), the camcorder will have more trouble focusing automatically while zooming.

Remote Operation

Using the Supplied Wireless Controller or an Optional Remote Controller

The zoom speeds when using the supplied wireless controller, the optional RC-V100 Remote Controller or a commercially available remote control connected to the REMOTE terminal are different. When using the supplied wireless controller, you must press the record enable button and desired zoom button simultaneously to zoom.

Zoom speeds

Accessory	Zoom speed
Wireless controller (supplied)	Constant zoom speed. See the table at the end of the procedure.
RC-V100 Remote Controller (optional)	Variable speed: The greater the angle at which the RC-V100's ZOOM dial is rotated from the center, the faster the zoom.
Commercially available remote controls	If the remote control does not support variable zoom: Constant zoom speed. If the remote control supports variable zoom: Variable zoom according to the remote control's settings.

Setting the Zoom Speed of the Supplied Wireless Controller

1 Open the zoom [Speed Level] submenu.
[Camera Setup] ➤ [Zoom] ➤ [Speed Level]

2 Select [Fast], [Normal] or [Slow] and then press SET.

3 Open the zoom [Wireless Controller] submenu.
[Camera Setup] ➤ [Zoom] ➤ [Wireless Controller]

4 Select the desired level and then press SET.

[Camera Setup]
[Zoom]
[Speed Level]
[Normal]

[Camera Setup]
[Zoom]
[Wireless Controller]
[8]

Supplied wireless controller: Approximate zoom speeds (time required to zoom end-to-end)

[Wireless Controller] setting	[Zoom Speed Level] setting		
	[Slow]	[Normal]	[Fast]
[1] (slowest)	4 min. 45 sec.	3 min.	1 min.
[16] (fastest)	4.0 sec.	2.5 sec.	1.7 sec.*

* When the zoom speed is too fast (approx. 1.7 seconds end-to-end), the camcorder will have more trouble focusing automatically while zooming.

NOTES

- When an optional RC-V100 Remote Controller is connected to the camcorder, you can zoom with the remote controller's ZOOM dial. At default settings, turn the dial right to zoom in (T) and left to zoom out (W).

Remote Operation Using Browser Remote

After completing the necessary preparations (📖 182), you can operate the zoom remotely from a connected device using the Browser Remote application.

Press one of the [ZOOM] controls on the Browser Remote screen to zoom as necessary.

- Press one of the controls on the [WIDE] (wide angle) side to zoom out or one of the controls on the [TELE] (telephoto) side to zoom in.
- There are three levels of constant zoom speed - [<]/[>] is the slowest and [⋘]/[⋙] the fastest.

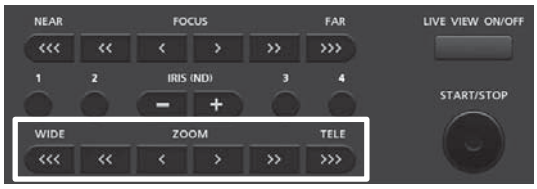

Soft Zoom Control

Using the soft zoom control function you can make the zoom start or end gradually when you operate the zoom using one of the rockers on the camcorder, a remote controller or the Browser Remote application.

1 Open the [Soft Zoom Control] submenu.
[🎥 Camera Setup] ➤ [Zoom] ➤ [Soft Zoom Control]

2 Select [Start] (soft control only at the beginning of the zoom), [Stop] (soft control only at the end of the zoom) or [Both], and then press SET.

[🎥 Camera Setup]
▽
[Zoom]
▽
[Soft Zoom Control]
▽
[Off]

Using Optional Conversion Lenses

You can use the following optional conversion lenses with this camcorder. Before you attach a conversion lens, perform the procedure below to optimize the autofocus and minimum object distance for the particular accessory.

Operating modes: CAMERA MEDIA | MXF MXF+MP4 MP4

Optional Conversion Lens	Focal Length Factor	Minimum Focusing Distance
TL-H58 Tele-converter	Approx. 1.5x	Approx. 130 cm (4.3 ft.) throughout the zoom range
WA-H58 Wide Attachment	Approx. 0.75x	Approx. 60 cm (2.0 ft.) throughout the zoom range

1 Open the [Conversion Lens] submenu.
[Camera Setup] [Conversion Lens]

2 Select [TL-H58] or [WA-H58] and then press SET.
- The image stabilization method, minimum focusing distance and the approximate distance to the subject displayed on the screen will change depending on the conversion lens selected.
- Select [Off] if you do not intend to use a conversion lens.

[Camera Setup]
[Conversion Lens]
[Off]

NOTES
- Even if [Camera Setup] [AF Mode] [Speed] was set to [High] or [Medium], it will change automatically to [Normal] when using a conversion lens.
- Vignetting may occur when taking wide angle shots with the optional TL-H58 Tele-converter.
- When [Conversion Lens] is set to [WA-H58], the telephoto end will be more limited than the wide-angle end.
- If you set an assignable button to [TL-H58] or [WA-H58] (129), you can press the button to turn on/off the optimized settings for the selected conversion lens.

Adjusting the Focus

The camcorder offers 3 ways to focus. When you use manual focus, you can use focus assistance functions, such as peaking and magnification, to help you focus more accurately.

Autofocus (AF): The camcorder continuously adjusts the focus automatically. When using autofocus, you can one of three levels of AF speed. You can also use the focus ring (with no physical stops).

Manual focus (MF): Adjust the focus manually using the focus ring, or remotely, using the Browser Remote application.

Push AF: While using MF, Normal AF or Medium AF, you can have the camcorder switch temporarily to Instant AF mode as long as you hold the PUSH AF button pressed down.

Operating modes: CAMERA MEDIA | MXF MXF+MP4 MP4

Autofocus (AF) Mode

The camcorder uses the TTL autofocus system and continuously adjusts the focus on the subject in the center of the screen. The focusing range is 1 cm (0.39 in.; at full wide-angle, measured from the front of the lens barrel) to ∞.
Even during autofocus mode, you can turn the focus ring to focus manually. When you stop turning the ring, the camcorder returns to autofocus mode. This is useful in situations such as when focusing on a subject on the other side of a window.

Set the FOCUS switch to A.

- I.AF appears on the left of the screen.

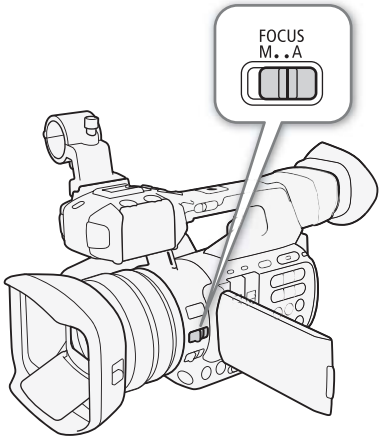

Remote Operation Using Browser Remote

After completing the necessary preparations (📖 182), you can change the focus mode remotely from a connected device using the Browser Remote application.

Press [MF] on the Browser Remote screen.

- The orange line in the button will turn gray and the camcorder will change to autofocus mode.
- Press [MF] again to return the camcorder to manual focus mode.

Setting the Autofocus Mode

You can select how fast the camcorder focuses using autofocus.

1 Open the AF mode's [Speed] submenu.
[Camera Setup] [AF Mode] [Speed]

2 Select the desired option and then press SET.

[Camera Setup]
[AF Mode]
[Speed]
[High]

Options

[High]:	Sets the autofocus mode to Instant AF. The focus is adjusted at the highest speed. This mode is useful even when recording in very bright or low-light surroundings. This mode uses both the TTL system and external sensor for focusing.
[Medium]:	Sets the autofocus mode to Medium AF. The camcorder focuses more smoothly on the subject than when using the [High] setting.
[Normal]:	Sets the autofocus mode to Normal AF. The autofocus adjustment is made at a stable speed.

NOTES

- When recording in bright surroundings, the camcorder closes down the aperture. This may cause the picture to appear blurred and is more noticeable toward the wide-angle end of the zoom range. In such case, set [Camera Setup] [ND Filter] to [Automatic].
- When [Camera Setup] [Conversion Lens] is set to a setting other than [Off] and when the camcorder is in infrared mode, the [High] and [Medium] settings are not available. Also, Push AF will operate at Normal AF speed.
- Autofocus takes longer to focus when the frame rate is set to 29.97P or 23.98P than when it is set to 59.94i. During slow & fast motion recording mode, the same is true for all shooting frame rates other than 60.
- When recording under dark conditions, the focusing range narrows and the picture may appear blurred.
- Autofocus (including Push AF) may not work well on the following subjects or in the following cases. In such case, focus manually.
  - Reflective surfaces
  - Subjects with low contrast or without vertical lines
  - Fast moving subjects
  - Through dirty or wet windows
  - Night scenes

Manual Focus (MF)

Using the Focus Ring

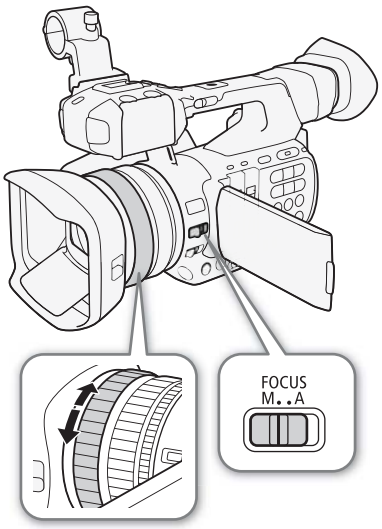

1 Set the FOCUS switch to M.
- MF appears on the left of the screen.

2 Turn the focus ring on the lens to adjust the focus.
- Focusing speed will depend on how you operate the focus ring.

NOTES
- You can use the focus ring to adjust the focus while you are operating the zoom. If the camcorder was initially in autofocus mode, it will return to autofocus mode after you adjust the focus manually.
- You can change the direction of the adjustment and the sensitivity of the response of the focus ring using the [Other Functions] [Custom Function] [Focus Ring Direction] and [Focus Ring Control] settings (141).

Remote Operation Using Browser Remote

After completing the necessary preparations (182), you can adjust the focus remotely from a connected device using the Browser Remote application.

1 If the camcorder is set to AF mode, touch [MF] on the Browser Remote screen.
- The gray line in the button will turn orange and the camcorder will change to manual focus mode.

2 Press one of the [FOCUS] controls to adjust the focus as necessary.
- Press one of the controls on the [NEAR] side to focus closer or one of the controls on the [FAR] side to focus farther away.
- There are three levels of adjustment - [<]/[>] is the smallest and [⋘]/[⋙] the largest.

NOTES
- **Using the subject distance display on the screen:**
  - When the camcorder switches out of autofocus mode or while you adjust the focus with the focus ring, the approximate subject distance is displayed on the screen for approximately 5 seconds.
  - Use the subject distance display as an estimate. When the distance reading is not considered very precise for a particular zoom range, it will be displayed in gray.
  - [∞] indicates infinity focus and [∞–] indicates over infinity focus.
  - You can change the units of distance between meters and feet using the [Other Functions] [Custom Function] [Distance Units] setting (141).

- The correct subject distance will not be displayed when an optional conversion lens is attached.

- If you operate the zoom after focusing, the focus on the subject may be lost.
- If you focus manually and then leave the camcorder with the power turned on, the focus on the subject may be lost after a while. This possible slight shift in focus is a result of the internal temperature rising in the camcorder and lens. Check the focus before resuming shooting.
- When an optional RC-V100 Remote Controller is connected to the camcorder, you can adjust the focus with the remote controller's FOCUS dial. At default settings, turn the dial right to focus farther and left to focus nearer.

Using the Focus Assistance Functions

In order to focus more accurately, you can use two focus assistance functions – peaking, which creates a clearer contrast by emphasizing the outlines of the subject, and magnification, which enlarges the image on the screen. You can use both functions simultaneously for greater effect.
You can also use the [Other Functions] ➤ [Custom Function] ➤ [Focus Assistance B&W] setting (141) to switch the screen to black & white while using the focus assistance functions.

Peaking

The camcorder offers two peaking levels.

[OLED/VF Setup] ➤ [Peaking] ➤ [Select] ➤ [Peaking 1]

1 Press the PEAKING button.
- The peaking icon (PEAK1 or PEAK2) appears at the lower center of the screen and the outlines in the image will be emphasized, depending on the focus.
- Press the button again to turn off peaking.
- Alternatively, you can use [OLED/VF Setup] ➤ [Peaking] ➤ [Setting] to turn peaking on and off.

2 Open the peaking [Select] submenu to select the peaking level.
[OLED/VF Setup] ➤ [Peaking] ➤ [Select]

3 Select the desired level and then press SET.

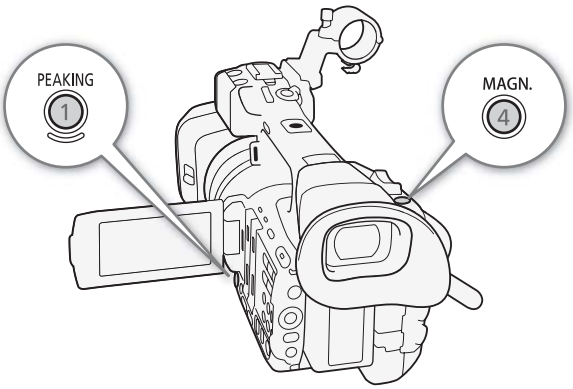

Magnification

1 Press the MAGN. button.
- MAGN. appears at the lower center of the screen and the center of the screen is magnified approximately 2 times*.
- A white frame representing the whole screen area is displayed on the top right of the screen. The orange frame within it represents the approximate part of the image shown magnified.

2 If necessary, use the joystick (▲▼ ◀▶) to move the orange frame around and check other parts of the image.
- You can move the orange frame 5 steps vertically or horizontally. Press the CANCEL button to return the magnification frame to the center position.

3 Press the MAGN. button again to cancel the magnification.

* The magnification that appears on the OLED screen and on the viewfinder screen is different. The magnification also differs based on the video configuration.

NOTES

- Peaking/Magnification appears only on the camcorder screen. It will not appear on an external monitor connected to the camcorder and will not affect your recordings.
- You can use the [OLED/VF Setup] [Peaking] [Peaking 1] and [Peaking 2] settings to set the color, gain and frequency of the two peaking levels independently of each other.
- **When using the camcorder's screen to focus:**
  - The camcorder features professional video scopes (108). You can display the edge monitor to help you focus even more accurately.
  - You can use peaking together with the edge monitor. In such case, the gain and frequency of the peaking effect will be adjusted automatically according to the gain settings of the edge monitor.

Push AF

While using manual focus (MF, 83) or autofocus at a [Normal] or [Medium] speed (Normal AF, Medium AF, 81), press the PUSH AF button and hold it pressed down.

- Autofocus is temporarily activated at the highest speed (Instant AF) as long as you hold the PUSH AF button pressed down.

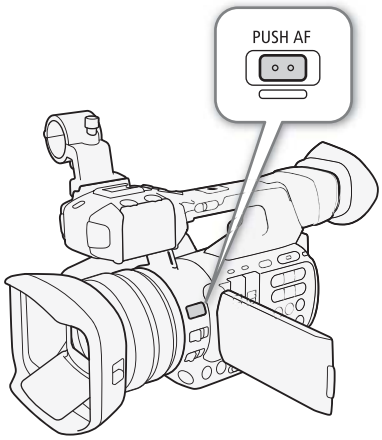

NOTES

- All the NOTES for the autofocus section (82), apply also to Push AF.
- Push AF is not available when [Camera Setup] [AF Mode] [Face AF] is set to [Face Only] and a face has not been detected in the picture.

Detecting and Focusing On Faces

The camcorder can detect a person's face during autofocus mode, automatically focus on it, and even track it if the person moves. When there are a number of people in the picture, one person (with the white face detection frame) will be determined to be the main subject and the camcorder will focus on that person's face. You can also change the person selected as main subject.

[Camera Setup]
[AF Mode]
[Face AF]
[Off]

1 Open the [Face AF] submenu.
[Camera Setup] [AF Mode] [Face AF]

2 Select the desired option and then press SET.
- or will appear on the left of the screen.

3 Point the camcorder at the subject.
- If there is more than one person in the picture, the camcorder will automatically select one person it determines is the main subject. The camcorder will indicate the main subject with a white face detection frame and other faces with gray frames.
- If necessary, push the joystick left/right to change the main subject when there is more than one person.

Options

[Face Priority] : When there is no face detected, the camcorder focuses automatically on the subject at the center of the screen.

[Face Only] : When there is no face detected, the camcorder is set to manual focus.

[Off]: Standard autofocus operation with no face detection.

NOTES

- The camcorder may mistakenly detect the faces of non-human subjects. In such case, turn face detection off.
- In certain cases, faces may not be detected correctly. Typical examples include:
  - Faces extremely small, large, dark or bright in relation to the overall picture.
  - Faces that are turned to the side, at a diagonal or partially hidden.
- Face detection cannot be used in the following cases:
  - When the shutter speed used is slower than 1/30 (1/24 if the frame rate is set to 23.98P).
  - When using slow & fast motion recording mode and the shooting frame rate is set to less than 24.
  - In manual focus mode while you hold the PUSH AF button pressed down.
  - During real-time proxy transfer mode or infrared mode.
- When a subject's face is detected, the camcorder adds an event mark to the frame (MXF clips only). You can then use **Canon XF Utility** to search for event marks in the MXF clip.
- If you set an assignable button to [Face AF] (129), you can press the button to toggle between the face detection options.

Focus Limit and Macro Shooting

[Camera Setup]
[Focus Limit]
[Off]

By default, the camcorder's focus range allows macro shooting. You can activate the focus limit to restrict the focus range. The focus range 1 cm (0.39 in.; at full wide-angle) to ∞ is limited to 60 cm (2 ft.) to ∞ (throughout the entire zoom range).

1 Open the [Focus Limit] submenu.
[Camera Setup] [Focus Limit]

2 Select [On] and then press SET.
- Select [Off] to enable macro shooting.

NOTES

- If you set an assignable button to [Focus Limit] (129), you can press the button to turn the focus limit on/off.

Image Stabilizer

Use the image stabilizer to compensate for camcorder shake in order to achieve steadier shots. There are 3 methods of image stabilization; select the method that best suits your needs.

Dynamic IS : Dynamic IS compensates for a higher degree of camcorder shake, such as when shooting while walking, and is more effective as the zoom approaches full wide angle.

Standard IS : Standard IS compensates for a lower degree of camcorder shake, such as when shooting while remaining stationary, and is suitable for shooting natural-looking scenes.

Powered IS : Powered IS is most effective when you are stationary and zooming in on far subjects using high zoom ratios (the more you approach the telephoto end). This mode is not suitable for tilting and panning shots.

Operating modes: CAMERA MEDIA | MXF MXF+MP4 MP4

To activate Dynamic IS or Standard IS

1 Open the OIS functions [Select] submenu.
[Camera Setup] [OIS Functions] [Select]

2 Select [Img Stab.] and then press SET.
- Select [Off] instead to turn off the image stabilization, for example, when recording with the camcorder mounted on a tripod.

3 Open the [Image Stabilizer] submenu.
[Camera Setup] [OIS Functions] [Image Stabilizer]

4 Select [Dynamic] or [Standard] and then press SET.
- The icon of the selected mode appears on the bottom of the screen.

[Camera Setup] [OIS Functions] [Select] [Img Stab.]

[Camera Setup] [OIS Functions] [Image Stabilizer] [Standard]

To activate Powered IS

Press the POWERED IS button to activate Powered IS.

- The Powered IS icon ( ) appears on the bottom of the screen.
- Press the POWERED IS button again to return the camcorder to the image stabilization method set in the menu.
- Powered IS can be used even when [Camera Setup] [OIS Functions] [Select] is set to [Off].

NOTES

- If you set an assignable button to [Img Stab.] (129), you can press the button to turn the selected image stabilization method on or off.
- If the degree of camcorder shake is too high, the image stabilizer may not be able to compensate fully.
- When using Dynamic IS, the edges of the picture may be adversely affected (ghosting, artifacts and/or dark areas may appear) when compensating for a high degree of camcorder shake.
- When [Camera Setup] [Wide-End Angle] is set to [Wider], [Image Stabilizer] will change automatically to [Standard] and it cannot be changed.

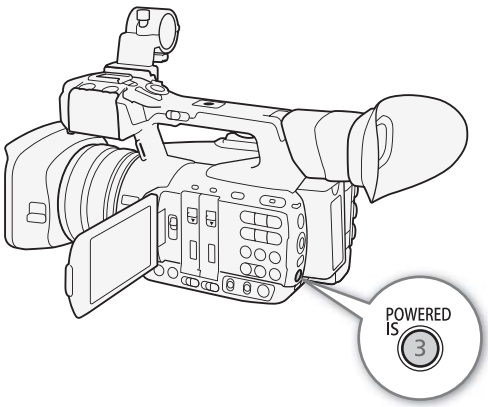

Onscreen Markers and Zebra Patterns

Using onscreen markers allows you to make sure your subject is correctly framed and is within the appropriate safe area. The zebra patterns help you identify areas that are overexposed. The onscreen markers and zebra pattern will not affect your recordings.

Operating modes: CAMERA MEDIA | MXF MXF+MP4 MP4

Displaying Onscreen Markers

The camcorder offers 5 types of onscreen markers. You can display multiple onscreen markers simultaneously.

[OLED/VF Setup]
[Markers]
[Center]
[Horizontal]
[Grid]
[Safe Area]
[Aspect Marker]
[Off]

1 Open the [Markers] submenu.
[OLED/VF Setup] [Markers]

2 Select a marker you wish to display, select [Black] or [Gray] and then press SET.
- Select [Off] to turn off the selected marker.
- You can display multiple markers simultaneously. Repeat this step as necessary.
- If you selected [Safe Area] or [Aspect Marker], continue to step 3. Otherwise, you can skip to step 4.

3 Select [Safe Area Setting] or [Aspect Ratio], select the desired option and then press SET.

4 Select [Enable], select [On] and then press SET to enable the onscreen markers.
- All of the selected onscreen markers will be displayed.
- Select [Off] to turn off all onscreen markers.

Options

[Center]: Displays a small marker that indicates the center of the screen.

[Horizontal]: Displays a horizontal line to help you compose level shots.

[Grid]: Displays a grid that allows you to frame your shots correctly (horizontally and vertically).

[Safe Area]: Displays indicators that show various safe areas, such as the action safe area and text safe area. Available options for [Safe Area Setting] are [80%], [90%], [92.5%] and [95%].

[Aspect Marker]: Displays markers that indicate various aspect ratios to help you keep your shot within that area. Available options for [Aspect Ratio] are [4:3], [13:9], [14:9], [1.66:1], [1.75:1], [1.85:1] and [2.35:1].

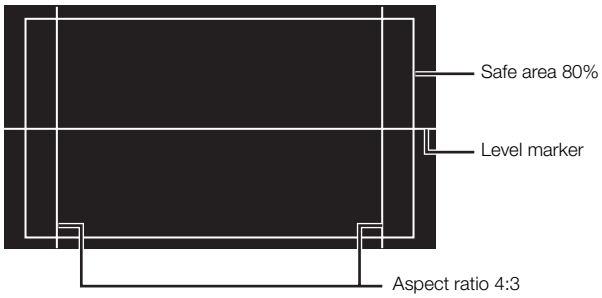

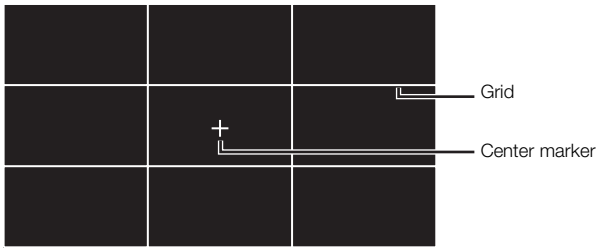

NOTES

- You can turn off all other onscreen displays, leaving only the onscreen markers (53).
- If you set an assignable button to [Markers] (129), you can press the button to turn the onscreen markers on/off.

Displaying Zebra Patterns

The camcorder has a zebra pattern feature that shows black and white diagonal stripes over areas that are overexposed. This is displayed only on the screen and will not affect your recordings. There are two types of zebra patterns and you can display both simultaneously. Zebra 1 lets you identify areas within a certain range (±5% of a specified level) while zebra 2 lets you identify areas that are over a specified level. When you display both simultaneously and they overlap, only zebra 1 will be displayed in those areas.

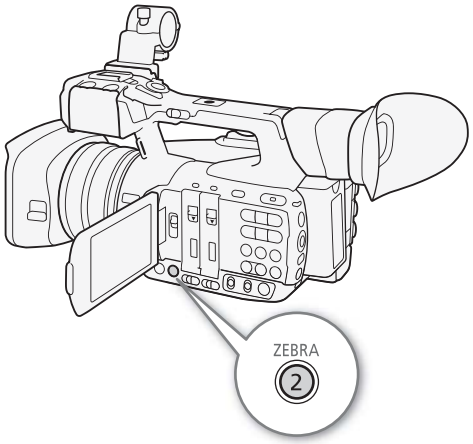

1 Open the zebra pattern [Select] submenu.
[OLED/VF Setup] ➤ [Zebra] ➤ [Select]

2 Select [Zebra 1], [Zebra 2] or [Zebra 1&2] and then press SET.

3 Open the zebra level submenu.
[OLED/VF Setup] ➤ [Zebra] ➤ [Zebra 1 Level] or [Zebra 2 Level]

4 Select a zebra level, press SET and then press MENU to close the menu.

5 Press the ZEBRA button to turn the selected zebra pattern on/off.
- Alternatively, you can use the [OLED/VF Setup] ➤ [Zebra] ➤ [Setting] setting to turn the zebra pattern on/off.

[OLED/VF Setup]
▽
[Zebra]
▽
[Select]
▽
[Zebra 1]

NOTES

- You can use the [OLED/VF Setup] ➤ [Zebra] ➤ [HD Output] setting to display the zebra pattern on an external monitor connected to the MON. terminal (XF205, HD output only) or HDMI OUT terminal (HD output only).

Setting the Time Code

In CAMERA mode, the camcorder can generate a time code signal and embed it in MXF clips. You can have the camcorder output the time code signal from the 3G/HD-SDI terminal*, MON. terminal* or TIME CODE terminal* (96). In MEDIA mode, you can output the time code of the MXF clip being played back through the same terminals. Additionally, you can superimpose the time code on video output from the MON. terminal*, HDMI OUT terminal or AV OUT terminal. When using a frame rate other than 23.98P, you can also select between a drop frame and non-drop frame time code.

XF205 To synchronize the camcorder's time code to an external time code generator, refer to *Synchronizing with an External Device* (94).

* XF205 only.

Selecting the Running Mode

You can select the running mode of the camcorder's time code.

Operating modes: CAMERA MEDIA | MXF MXF+MP4 MP4

[00:00 TC/UB Setup] ▸ [Time Code] ▸ [Mode] ▸ [Preset]

1 Open the time code [Mode] submenu.
[00:00 TC/UB Setup] ▸ [Time Code] ▸ [Mode]

2 Select the desired option and then press SET.

- If you selected [Regen.], you do not need to perform the rest of this procedure. If you selected [Preset] and would like to set the time code's initial value, see the following section *Setting the Time Code's Initial Value*.

[00:00 TC/UB Setup] ▸ [Time Code] ▸ [Run] ▸ [Rec Run]

3 After you select [Preset], open the time code [Run] submenu.
[00:00 TC/UB Setup] ▸ [Time Code] ▸ [Run]

4 Select the desired option and then press SET.

Options

[Preset]: The time code starts from an initial value you can select in advance. The default initial time code is 00:00:00.00. The time code's running mode depends on the [Run] setting.

- [Rec Run]: The time code runs only while recording so MXF clips recorded consecutively on the same CF card will have continuous time codes.
- [Free Run]: The time code starts running the moment you press SET to select this option and keeps running regardless of the camcorder's operation.

[Regen.]: The camcorder will read the selected CF card and the time code will continue from the last recorded time code on the CF card. The time code runs only while recording so MXF clips recorded consecutively on the same CF card will have continuous time codes.

Setting the Time Code's Initial Value

If you set the time code mode to [Preset], you can set the initial value of the time code.

[00:00 TC/UB Setup] ▸ [Time Code] ▸ [Setting]

1 Open the time code [Setting] submenu.
[00:00 TC/UB Setup] ▸ [Time Code] ▸ [Setting]

2 Select [Set] and then press SET.

- The time code setting screen appears with an orange selection frame indicating the hours.

- To reset the time code to [00:00:00.00], select [Reset] instead. If the running mode is set to [Free Run], the time code will be reset the moment you press SET and keep running continuously from 00:00:00.00.

3 Push the joystick up/down to set the hours and then press SET to move to the minutes.

4 Change the rest of the fields (minutes, seconds, frame) in the same way.
- Press the CANCEL button to close the screen without setting the time code.

5 Select [Set] and then press SET to close the screen.
- If the running mode is set to [Free Run], the time code will start running from the selected time code the moment you press SET.

Selecting Drop or Non-Drop Frame

[00:00 TC/UB Setup] ▸ [Time Code] ▸ [DF/NDF] ▸ [DF]

You can select between a drop frame (DF) or non-drop frame (NDF) time code, depending on how you plan to use your recordings. However, when the frame rate is set to 23.98P, the time code is set to non-drop frame (NDF) and cannot be changed.

Operating modes: CAMERA MEDIA | MXF MXF+MP4 MP4

1 Open the [DF/NDF] submenu.
[00:00 TC/UB Setup] ➤ [Time Code] ➤ [DF/NDF]

2 Select [DF] or [NDF] and then press SET.
- The time code display will differ depending on the setting. When you select [DF], the time code will appear as [00:00:00.00]; when you select [NDF], it will appear as [00:00:00:00].

Putting the Time Code Display on Hold

If you set an assignable button to [Time Code Hold] (📖 129), you can press the button to freeze the display of the time code*. While the time code display is put on hold, [H] will appear on the screen next to the time code. The time code continues to run normally while the time code display is on hold. When you resume the time code display, the current time code will be displayed.

* The time code signal output from the 3G/HD-SDI terminal or TIME CODE terminal (both XF205 only) will not be put on hold. The time code superimposed on the video signal output from MON. terminal (XF205 only), HDMI OUT terminal and AV OUT terminal will be put on hold.

Operating modes: CAMERA MEDIA | MXF MXF+MP4 MP4

About the Time Code Display

An icon may appear next to the time code depending on the operation. Refer to the following table.

Icon	Description
R	The time code is set to [Regen.].
P	The time code is set to [Preset] and the running mode is set to [Rec Run].
F	The time code is set to [Preset] and the running mode is set to [Free Run].
E	Time code signal is coming from an external source.
H	Time code display is on hold.
No icon	Time code during clip playback.

NOTES

- The frames value of the time code runs from 0 to 23 (frame rate set to 23.98P) or from 0 to 29 (all other frame rates).
- XF205 However, when [00:00 TC/UB Setup] ➤ [Time Code] ➤ [XF Legacy Sync] is set to [On], even when the frame rate is set to 23.98P, the frames value of the time code output from the TIME CODE terminal will run from 0 to 29.
- When you are using interval recording, frame recording or slow & fast motion recording mode, you cannot select the [Free Run] running mode. Conversely, when you are using pre-recording mode and when the movie format is set to MXF+MP4, [Free Run] is set automatically and cannot be changed.
- When you mix drop frame and non-drop frame time codes, there might be a discontinuity in the time code at the point where the recording starts.
- When you are using the [Free Run] running mode, the time code will continue running as long as the built-in rechargeable lithium battery is charged, even if you disconnect all other power sources. However, this is less accurate than when the camcorder is on.
- If you set an assignable button to [Time Code] (📖 129), you can press the button to open the [00:00 TC/UB Setup] ➤ [Time Code] submenu.

Setting the User Bit

The user bit display can be selected from the date or the time of recording, or an identification code consisting of 8 characters in the hexadecimal system. There are sixteen possible characters: the numbers 0 to 9 and the letters A to F.
In addition to being recorded with MXF clips, the user bit information can be output along with the video signal output from the 3G/HD-SDI terminal*, MON. terminal*, TIME CODE terminal* or HDMI OUT terminal. Conversely, if user bit information is being received along with an external time code, you can also record the external user bit on the recording media.
* XF205 only.

[00:00 TC/UB Setup]
▽
[User Bit]
▽
[Type]
▽
[Setting]

Operating modes: CAMERA MEDIA | MXF MXF+MP4 MP4

1 Open the user bit [Type] submenu.
[00:00 TC/UB Setup] ➤ [User Bit] ➤ [Type]

2 Select the desired user bit type and then press SET.
- Select [Setting] to set your own identification code, [Time] to use the time as user bit, or [Date] to use the date as the user bit.
- If you selected [Time] or [Date], you do not need to perform the rest of the procedure. If you selected [Setting], continue the procedure to set the identification code.

3 Select [Set] and then press SET.
- The user bit setting screen appears with an orange selection frame on the leftmost character.
- To reset the user bit to [00 00 00 00], select [Reset] instead.

4 Push the joystick up/down to select the first character and then press SET to move to the next character.
- Change the rest of the characters in the same way.
- Press the CANCEL button to close the screen without setting the user bit.

5 Select [Set] and then press SET to close the screen.

XF205 Synchronizing with an External Device

Using Genlock synchronization, you can synchronize this camcorder's video signal to that of an external video device. Similarly, using an external time code signal, you can synchronize this camcorder's time code to the external signal. Using the external time code signal with multiple cameras allows you to set up a multi-camera recording. You can also output the time code signal from this camcorder to achieve the same result. If you output the time code from the 3G/HD-SDI terminal to an editing device, the editor can create video with the same time code.

Connecting an External Device

When synchronizing the camcorder to an external signal*, use the GENLOCK/SYNC OUT terminal. When synchronizing a time code signal, use the TIME CODE terminal. Be sure to set either terminal to input or output in advance.
Connect the external device to the camcorder as shown in the following diagram.

* As reference video signal (input signal) for Genlock synchronization, you can use an analog blackburst or tri-level signal.

Connection Diagram

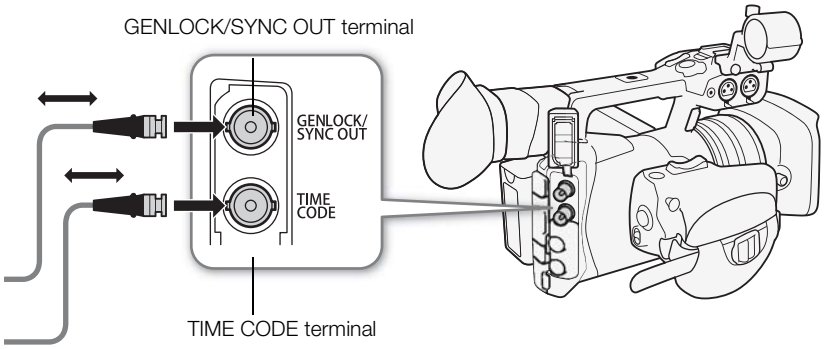

Reference Video Signal Input (Genlock Synchronization)

When a reference sync signal (analog blackburst or tri-level signal) is input through the GENLOCK/SYNC OUT terminal, the phases of the camcorder's V and H sync will automatically be synchronized to it. The phase difference between the external Genlock signal and the camcorder is initially set to 0. The H phase can be adjusted within the range of approximately ±0.4 H.

Operating modes: CAMERA MEDIA | MXF MXF+MP4 MP4

1 Open the [GENLOCK/SYNC OUT] submenu.
- [Video Setup] ➤ [GENLOCK/SYNC OUT]

2 Select [Genlock] and then press SET.

3 Open the [Genlock Adjustment] submenu.
[Other Functions] ➤ [Genlock Adjustment]

4 Adjust the H phase to the desired level (-1023 to 1023), select [Set] and then press SET.
- Push the joystick up/down to select the value for each field and then press SET to move to the next field.

[Video Setup]
▽
[GENLOCK/SYNC OUT]
▽
[Genlock]

[Other Functions]
▽
[Genlock Adjustment]

NOTES

- When [Video Setup] ➤ [3G/HD-SDI] is set to [Direct], the camcorder will synchronize with a Genlock signal that has the same frequency as that used for recording. However, when in addition to that, the frame rate is set to 23.98P, you can synchronize instead to an external 29.97 Hz or 59.94 Hz signal by setting [00:00 TC/UB Setup] ➤ [Time Code] ➤ [XF Legacy Sync] to [On].
- When a suitable Genlock signal is input, the Genlock synchronization stabilizes after approximately 10 seconds.
- When a suitable Genlock signal is detected, the Gen. icon will flash on the upper right of the screen. When the camcorder locks on the external Genlock signal, the icon will stay on.
- If the external Genlock signal is incorrect, the synchronization may not be stable. In such case, the recorded time code may be incorrect.

Time Code Signal Input

[00:00 TC/UB Setup] ➤ [Time Code] ➤ [TC In/Out] ➤ [In]

An external SMPTE-standard LTC timing signal received from the TIME CODE terminal will be recorded as the time code. The user bit of the external timing signal can also be recorded with MXF clips. Before connecting the device, set the TIME CODE terminal to input. Also, you must set the running mode of the time code to [Free Run] (90).

Operating modes: CAMERA MEDIA | MXF MXF+MP4 MP4

1 Open the [TC In/Out] submenu.
[00:00 TC/UB Setup] ➤ [Time Code] ➤ [TC In/Out]

2 Select [In] and then press SET.

Recording the User Bit of an External Signal

[00:00 TC/UB Setup] ➤ [User Bit] ➤ [Recording Mode] ➤ [Internal]

The user bit of an external time code signal can also be recorded with MXF clips along with the time code itself.

1 Open the user bit [Recording Mode] submenu.
[00:00 TC/UB Setup] ➤ [User Bit] ➤ [Recording Mode]

2 Select [External] and then press SET.

NOTES

- The camcorder will synchronize with an external time code that has the same frequency as that used for recording. However, when the frame rate is set to 23.98P, you can synchronize instead to a 30-frame time code signal by setting [00:00 TC/UB Setup] ➤ [Time Code] ➤ [XF Legacy Sync] to [On].
- When a suitable time code signal is received, the camcorder's own time code will be synchronized to it and the synchronization will be maintained even if you disconnect the cable from the TIME CODE terminal. However, performing any of the following actions while the cable is not connected will cause the synchronization to be disrupted; the correct time code will be restored once you reconnect the cable.
  - Turning the camcorder off/on
  - Changing the operating mode to MEDIA mode
  - Changing the video configuration
- If the external time code signal is incorrect or there is no input signal, the internal time code set in the [00:00 TC/UB Setup] ➤ [Time Code] submenu will be recorded instead.
- While a time code signal is being received, the external time code's drop-frame bit will be used.

Reference Video Signal Output

After changing the GENLOCK/SYNC OUT terminal's function to [SYNC Output], you can output the camcorder's video signal as a reference sync signal (HD tri-level signal) to synchronize an external device to this camcorder. The reference video signal output will have the same frequency as the signal output from the 3G/HD-SDI terminal.

Operating modes: CAMERA MEDIA | MXF MXF+MP4 MP4

1 Open the [GENLOCK/SYNC OUT] submenu.
[Video Setup] ➤ [GENLOCK/SYNC OUT]

2 Select [SYNC Output] and then press SET.
- If necessary, change the scan mode (P or PsF) with the [Video Setup] ➤ [SYNC Scan Mode] setting.
- If necessary to synchronize with older XF camcorders, you can change the reference output signal with the [00:00 TC/UB Setup] ➤ [Time Code] ➤ [XF Legacy Sync] setting.

[Video Setup]
▽
[GENLOCK/SYNC OUT]
▽
[Genlock]

Synchronization signals

Video output from the 3G/HD-SDI terminal		Signal output from the GENLOCK/SYNC OUT terminal		
		CAMERA mode		MEDIA mode
Resolution	Frame rate	[XF Legacy Sync][1] set to [Off]	[XF Legacy Sync][1] set to [On]	
1920x1080	59.94i / 59.94P	1080/59.94i	1080/59.94i	1080/59.94i
	29.97 (P/PsF)	1080/29.97 (P/PsF)[2]		
	23.98P	1080/23.98 (P/PsF)[2]		
1280x720	59.94P	720/59.94P	720/59.94P	720/59.94P
	29.97P	720/29.97P		
	23.98P	720/23.98P		

[1] [00:00 TC/UB Setup] ➤ [Time Code] ➤ [XF Legacy Sync].
[2] You can select P or PsF output with the [Video Setup] ➤ [SYNC Scan Mode] setting.

Time Code Signal Output

The time code will be output from the TIME CODE terminal as an SMPTE-standard LTC timing signal. The user bit will also be output. Before connecting the device, set [00:00 TC/UB Setup] ➤ [Time Code] ➤ [TC In/Out] to [Out] to change the TIME CODE terminal to output (📖 95).
The embedded time code will be output also from the 3G/HD-SDI terminal and the MON. terminal. Additionally, you can set [Video setup] ➤ [HDMI Time Code] to [On], to output the embedded time code also from the HDMI OUT terminal.

Operating modes: CAMERA MEDIA | MXF MXF+MP4 MP4

ⓘ NOTES
- The camcorder will output a time code that has the same frequency as that used for recording. When the frame rate is set to 23.98P, you can output instead a 30-frame time code signal by setting [00:00 TC/UB Setup] ➤ [Time Code] ➤ [XF Legacy Sync] to [On].

- The user bit of the time code signal is output while the camcorder is recording MXF clips in CAMERA mode or during playback of MXF clips in MEDIA mode. When the frame rate is set to 23.98P and [00:00 TC/UB Setup] ➤ [User Bit] ➤ [Output Mode] is set to [Pulldown], the signal is converted to 59.94i / 59.94P using the 2:3 pulldown method. An external device can receive the data used in this conversion (2:3 pulldown data) to convert the signal to the original 1080/23.98P specifications.

Recording Audio

The camcorder features 4-channel or 2-channel linear PCM audio recording and playback for MXF clips and 2-channel AAC audio recording and playback for MP4 clips. The sampling frequency is 48 kHz for all audio recording modes. You can record audio using commercially available microphones (INPUT 1/INPUT 2 terminal, MIC terminal), line input (INPUT 1/INPUT 2 terminal) or the built-in microphone.
The same audio channels that are being recorded in the camcorder can also be output with the video signal from the 3G/HD-SDI terminal* or MON. terminal*. You can record this audio signal on an external recorder.
* XF205 only.

Operating modes: CAMERA MEDIA | MXF MXF+MP4 MP4

Audio Settings and Recorded Audio Channels

Which audio inputs are recorded to which audio channels is determined by a combination of menu settings, audio-related controls on the camcorder and whether an external microphone is connected to the MIC terminal. The following table gives an overview of the possible combinations.
For MXF clips, all the combinations listed are available. For MP4 clips, when the movie format is set to MP4 or to MXF+MP4 using 2-channel audio recording, only the combinations marked as Ⓐ are available. When the movie format is set to MXF+MP4 using 4-channel audio recording, with the [♪)) Audio Setup] ➤ [Audio Input] ➤ [MP4 Channels] setting you can select which two channels of the four (Ⓑ or Ⓒ) to record with the MP4 clip.

2-channel audio recording

Menu settings		AUDIO IN selection switches		MIC terminal used	Recorded audio channels/ audio sources	
[4-Channel Input][1]	[CH2 Input][2]	CH1	CH2		CH1	CH2
[Off] (2)	[INPUT 2]	INPUT 1	INPUT 2	–	INPUT 1 terminal (XLR)	INPUT 2 terminal (XLR)
	[INPUT 1]			–		INPUT 1 terminal (XLR)
	–		INT.MIC/MIC	No		Built-in microphone (monaural)
				Yes		MIC terminal (monaural)
		INT.MIC/MIC	INPUT 2	No	Built-in microphone (monaural)	INPUT 2 terminal (XLR)
				Yes	MIC terminal (monaural)	
			INT.MIC/MIC	No	Built-in microphone (L)	Built-in microphone (R)
				Yes	MIC terminal (L)	MIC terminal (R)

Ⓐ

4-channel audio recording

Menu settings		AUDIO IN selection switches		MIC terminal used	Recorded audio channels/audio sources			
[4-Channel Input][1]	[CH2 Input][2]	CH1	CH2		CH1	CH2	CH3	CH4
[On] (4)	[INPUT 2]	INPUT 1	INPUT 2	No	INPUT 1 terminal (XLR)	INPUT 2 terminal (XLR)	Built-in microphone (L)	Built-in microphone (R)
				Yes			MIC terminal (L)	MIC terminal (R)
	[INPUT 1]			No		INPUT 1 terminal (XLR)	Built-in microphone (L)	Built-in microphone (R)
				Yes			MIC terminal (L)	MIC terminal (R)
	–	INPUT 1	INT.MIC/MIC	No	INPUT 1 terminal (XLR)	Built-in microphone (monaural)	Built-in microphone (L)	Built-in microphone (R)
				Yes		MIC terminal (monaural)	MIC terminal (L)	MIC terminal (R)
		INT.MIC/MIC	INPUT 2	No	Built-in microphone (monaural)	INPUT 2 terminal (XLR)	Built-in microphone (L)	Built-in microphone (R)
				Yes	MIC terminal (monaural)		MIC terminal (L)	MIC terminal (R)
			INT.MIC/MIC	No	Built-in microphone (L)	Built-in microphone (R)	Built-in microphone (L)	Built-in microphone (R)
				Yes	MIC terminal (L)	MIC terminal (R)		

Ⓑ Ⓒ

[1] [♪)) Audio Setup] ➤ [Audio Input] ➤ [4-Channel Input]. The number in parentheses indicates the number of audio channels recorded.
[2] [♪)) Audio Setup] ➤ [Audio Input] ➤ [CH2 Input].

NOTES

- On the [Audio] status screen (📖 211), you can check the audio level adjustment mode and input source for each of the audio channels.

Selecting the Number of Recorded Audio Channels

You can select how many audio channels (2 or 4) will be recorded with MXF clips. Since MP4 clips can only record 2 audio channels, when the movie format is set to MXF+MP4 using 4-channel audio recording, you can select which 2 audio channels will be recorded with the MP4 clip.

Operating modes: CAMERA MEDIA | MXF MXF+MP4 MP4

1 Open the [4-Channel Input] submenu.
[♪)) Audio Setup] ➤ [Audio Input] ➤ [4-Channel Input]

2 Select [On] for 4-channel audio recording or [Off] for 2-channel audio recording and then press SET.
- During 4-channel audio recording, 4ch will appear on the right of the screen.

[♪)) Audio Setup]
[Audio Input]
[4-Channel Input]
[Off]

Selecting the Audio Channels for MP4 Clips

Operating modes: CAMERA MEDIA | MXF MXF+MP4 MP4

1 Open the [MP4 Channels] submenu.
[♪)) Audio Setup] ➤ [Audio Input] ➤ [MP4 Channels]

2 Select [CH1/CH2] or [CH3/CH4] and the press SET.

[♪)) Audio Setup]
[Audio Input]
[MP4 Channels]
[CH1/CH2]

Connecting an External Microphone or External Audio Input Source to the Camcorder

To each of the INPUT terminals you can attach commercially available microphones or analog line in sources with an XLR connector. To the MIC terminal you can attach commercially available condenser microphones with their own power supply, and a ∅ 3.5 mm stereo mini plug. When using an external microphone, you can use the camcorder's microphone holder.

Follow the procedure below to attach a microphone (refer also to the following illustration). To connect an external device to the camcorder, plug the device's cable into the camcorder's XLR terminal (④).

1 Loosen the microphone lock screw (①), open the microphone holder and insert the microphone (②).

2 Tighten the lock screw and put the microphone cable through the microphone cable clamp under the microphone holder (③).

3 Plug the microphone cable into the desired INPUT terminal (④) or the MIC terminal (⑤).

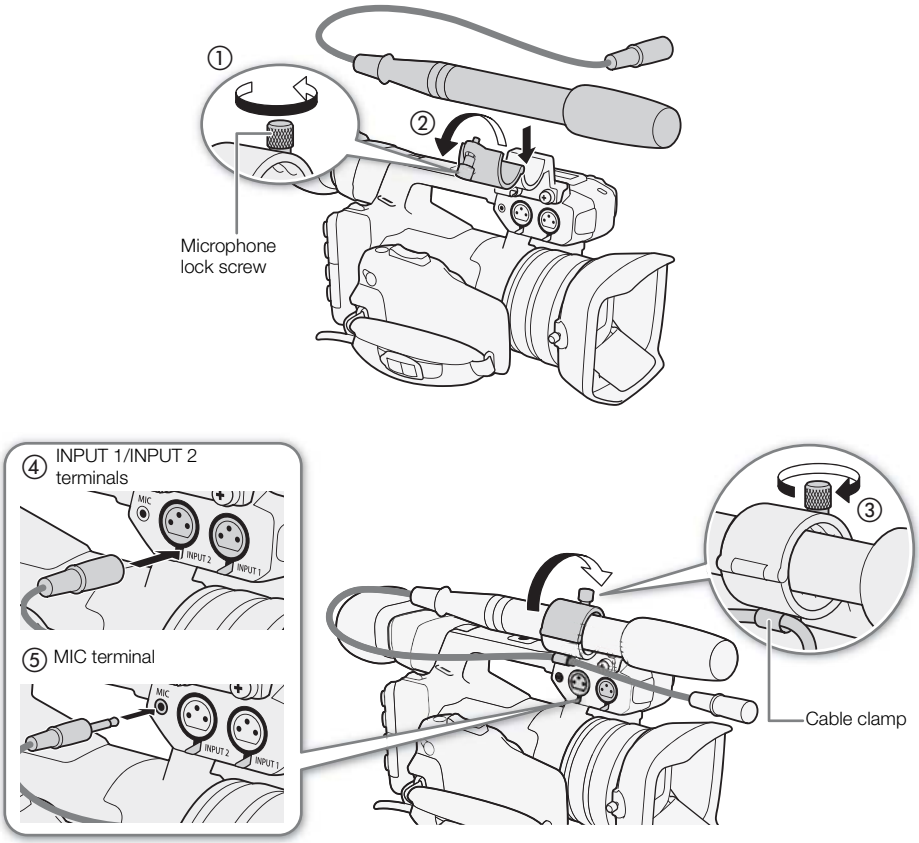

Using the Built-in Microphone or MIC Terminal

Set the AUDIO IN selection switch of the desired channel to INT.MIC/MIC.

- If you connect a microphone to the MIC terminal while the AUDIO IN switch is set to INT.MIC/MIC, the camcorder will switch automatically from the built-in microphone to the external microphone.

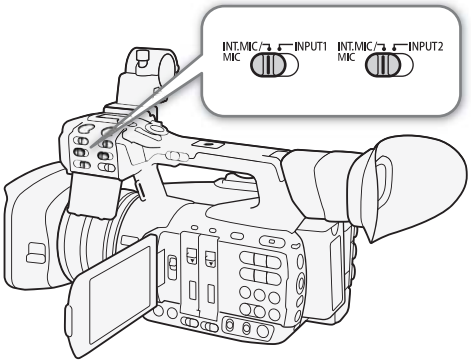

Selecting the Microphone's Low-Cut Filter

The setting is separate for the built-in microphone and for an external microphone connected to the MIC terminal.

1 Open the [Int. Mic Low Cut] or [MIC Low Cut] submenu.
[♪)) Audio Setup] ➤ [Audio Input] ➤ [Int. Mic Low Cut] or [MIC Low Cut]

2 Select the desired option and then press SET.

[♪)) Audio Setup]
[Audio Input]
[Int. Mic Low Cut]
[MIC Low Cut]
[Off]

Options

[Off]: For recording audio under usual conditions.

[LC1]*: For recording mainly people's voices.

[LC2]*, [On]**: For reducing the background sound of wind when recording outdoors in windy surroundings (for example, on a beach or close to buildings). Note that when you use this setting some low-frequency sounds may be suppressed along with the sound of wind.

* Only for [Int. Mic Low Cut].
** Only for [MIC Low Cut].

Selecting the Built-in Microphone's Sensitivity

1 Open the [Int. Mic Sensitivity] submenu.
[♪)) Audio Setup] ➤ [Audio Input] ➤ [Int. Mic Sensitivity]

2 Select the desired option and then press SET.

[♪)) Audio Setup]
[Audio Input]
[Int. Mic Sensitivity]
[Normal]

Options

[Normal]: For recording audio under usual conditions.

[High]: For recording audio at a higher volume (+6 dB).

Activating the Microphone Attenuator

If the audio level is too high and the sound sounds distorted when recording with the built-in microphone or an external microphone connected to the MIC terminal, activate the microphone attenuator (12 dB for the built-in microphone, 20 dB for an external microphone).

1 Open the [Int. Mic Att.] or [MIC Att.] submenu.
[♪)) Audio Setup] ➤ [Audio Input] ➤ [Int. Mic Att.] or [MIC Att.]

2 Select [On] and then press SET.

[♪)) Audio Setup]
[Audio Input]
[Int. Mic Att.]
[MIC Att.]
[Off]

Using the INPUT 1/INPUT 2 Terminals

Using the INPUT 1/INPUT 2 terminals, you can record audio independently to two audio channels from a microphone or analog audio input source.

1 Set the AUDIO IN selection switch for CH1 to INPUT 1 and the AUDIO IN selection switch for CH2 to INPUT 2.

2 To select the audio source, set the INPUT 1 or INPUT 2 switch to LINE or MIC as necessary.

- To supply a microphone with phantom power, set the switch to MIC+48V instead. Make sure to connect the microphone first, before turning the phantom power on. Keep the microphone connected when turning off the phantom power.

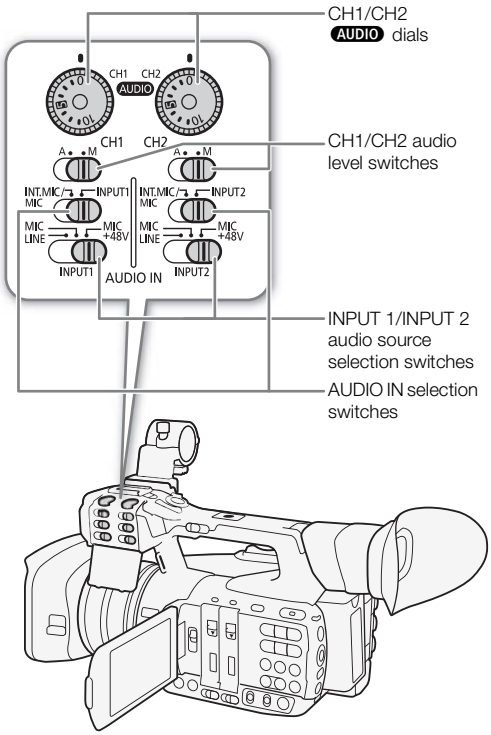

IMPORTANT

- When connecting a microphone or device that does not support phantom power, make sure to set the INPUT 1/INPUT 2 switch to MIC or LINE, respectively. If you set the switch to MIC+48V, the microphone or device may be damaged.

Recording a Single Audio Input to Two Audio Channels

By default, each XLR audio input is recorded to a separate audio channel (INPUT 1 to CH1 and INPUT 2 to CH2). If necessary (for example, as an audio backup recording), you can the audio input into the INPUT 1 terminal to both audio channels, CH1 and CH2. In that case, you can adjust the audio recording levels of each channel independently of each other.

[♪)) Audio Setup] ▽ [Audio Input] ▽ [CH2 Input] ▽ [INPUT 2]

1 Open the [CH2 Input] submenu.

[♪)) Audio Setup] ➤ [Audio Input] ➤ [CH2 Input]

2 Select the desired option and then press SET.

Options

[INPUT 2]: Records audio to each channel separately. Audio input into INPUT 1 is recorded to CH1, while audio input into INPUT 2 is recorded to CH2.

[INPUT 1]: Audio input into INPUT 1 is recorded to both channels. Audio input into INPUT 2 will not be recorded.

Selecting the Microphone's Sensitivity

When the AUDIO IN selection switch is set to INPUT 1 or INPUT 2 and the corresponding INPUT 1/INPUT 2 switch is set to MIC or MIC+48V, you can select the microphone sensitivity of the external microphone.

1 Open the desired INPUT terminal's sensitivity submenu.
[♪)) Audio Setup] ➤ [Audio Input] ➤ [INPUT 1 Mic Trimming] or [INPUT 2 Mic Trimming]

2 Select the desired level and then press SET.

Available Sensitivity Levels

+12 dB	+6 dB	0 dB	-6 dB	-12 dB

[♪)) Audio Setup]
▽
[Audio Input]
▽
[INPUT 1 Mic Trimming]
[INPUT 2 Mic Trimming]
▽
[0 dB]

Activating the Microphone's Attenuator

When the AUDIO IN selection switch is set to INPUT 1 or INPUT 2 and the corresponding INPUT 1/INPUT 2 switch is set to MIC or MIC+48V, you can activate the external microphone's attenuator (20 dB).

1 Open the desired INPUT terminal's microphone attenuator submenu.
[♪)) Audio Setup] ➤ [Audio Input] ➤ [INPUT 1 Mic Att.] or [INPUT 2 Mic Att.]

2 Select [On] and then press SET.

[♪)) Audio Setup]
▽
[Audio Input]
▽
[INPUT 1 Mic Att.]
[INPUT 2 Mic Att.]
▽
[Off]

Adjusting the Audio Level

For CH1 and CH2, you can set the audio recording level to automatic or manual adjustment separately for each channel. However, when the AUDIO IN selection switches for CH1 and CH2 are both set to INT.MIC/MIC (built-in microphone or external microphone connected to the MIC terminal), the audio recording level settings for CH1 are applied also to CH2.

CH1/CH2: Automatic Audio Level Adjustment

Set the audio level switch of the desired channel to A (automatic) to let the camcorder automatically adjust that channel's audio level.

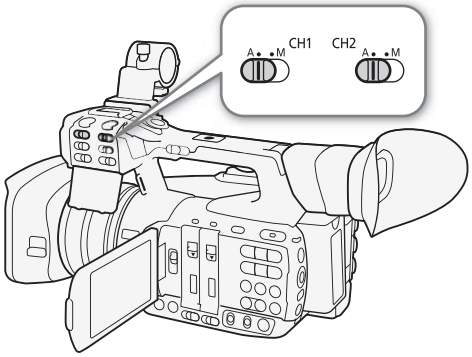

NOTES

- When both CH1 and CH2 are set to record audio input from the INPUT 1/INPUT terminals and both INPUT 1 and INPUT 2 switches are set to the same audio source (external microphone or external line input), if the audio level for both channels is set to automatic, you can use the [♪) Audio Setup] ➤ [Audio Input] ➤ [INPUT 1&2 ALC Link] setting to link the audio level adjustment of both channels.

CH1/CH2: Manual Audio Level Adjustment

You can set the audio level for each channel manually from -∞ to 18 dB.

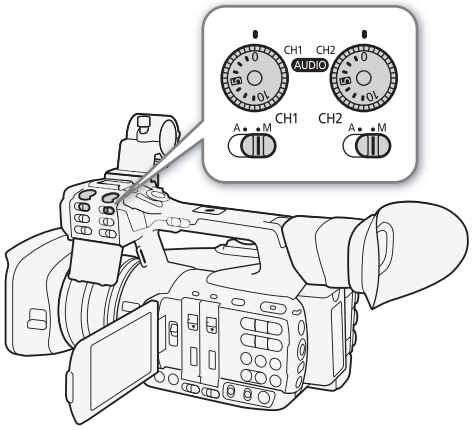

1 Set the audio level switch of the desired channel to M.

2 Turn the corresponding AUDIO dial to adjust the audio level.
   - For reference, 0 corresponds to -∞, 5 corresponds to 0 dB, and 10 corresponds to +18 dB.
   - As a guideline, adjust the audio recording level so that the audio level meter on the screen will go to the right of the -18 dB mark (one mark right of the -20 dB mark) only occasionally.
   - Closing the protective cover will prevent the audio controls from being changed inadvertently.

CH3/CH4: Audio Level Adjustment

The audio level for CH3 and CH4 can only be adjusted when [♪)) Audio Setup] ➤ [Audio Input] ➤ [4-Channel Input] is set to [On] (4-channel audio recording). The audio recording level settings are common to both CH3 and CH4.

1 Open the [CH3/CH4 Mode] submenu.
[♪)) Audio Setup] ➤ [Audio Input] ➤ [CH3/CH4 Mode]

2 Select [Automatic] or [Manual] and then press SET.
- If you selected [Automatic], you do not need to perform the rest of the procedure. If you selected [Manual], continue the procedure to set the audio recording level.

3 Open the [CH3/CH4 Level] submenu.
[♪)) Audio Setup] ➤ [Audio Input] ➤ [CH3/CH4 Level]

4 Push the joystick up/down to set the audio recording level and then press SET.
- As a guideline, adjust the audio recording level so that the audio level meter on the screen will go to the right of the -18 dB mark (one mark right of the -20 dB mark) only occasionally.

[♪)) Audio Setup]
[Audio Input]
[CH3/CH4 Mode]
[Automatic]

[♪)) Audio Setup]
[Audio Input]
[CH3/CH4 Level]
[50]

ⓘ NOTES
- When recording audio input from the INPUT 1/INPUT 2 terminals, if either CH1 or CH2 is set to manual audio level adjustment, you can also activate the audio peak limiter to prevent audio distortions. When activated, the audio peak limiter will limit the amplitude of audio input signals when they exceed -6 dBFS. Use the [♪)) Audio Setup] ➤ [Audio Input] ➤ [INPUT 1&2 Limiter] setting.
- We recommend using headphones when adjusting the audio level. If the input level is too high, audio may become distorted even if the audio level indicator shows an appropriate level.
- If you set an assignable button to [Audio Level] (📖 129), you can press the button to turn the onscreen audio level indicator on and off.

Monitoring the Audio with Headphones

You can connect to the 🎧 (headphone) terminal any pair of headphones with a ∅ 3.5 mm stereo mini plug to monitor the recorded audio. Press the HEADPHONE +/- buttons to adjust the volume.

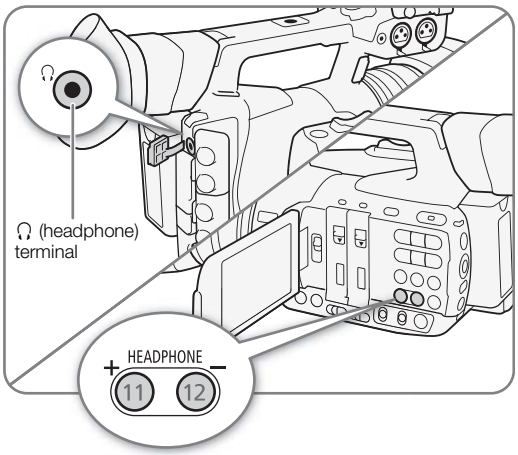

ⓘ NOTES
- You can also adjust the headphone volume with the [♪)) Audio Setup] ➤ [Audio Output] ➤ [Headphone Volume] setting.
- When you are monitoring the audio, you can choose to synchronize the audio signal with the video signal or monitor the audio in real time. Use the [♪)) Audio Setup] ➤ [Audio Output] ➤ [Monitor Delay] setting to select the method.

Colors Bars/Audio Reference Signal

You can have the camcorder generate and record color bars and a 1 kHz audio reference signal and output them from the 3G/HD-SDI terminal[1], MON. terminal[1], HDMI OUT terminal, AV OUT terminal and 🎧 (headphone) terminal[2].

[1] XF205 only.
[2] Outputs audio reference signal only.

Operating modes: CAMERA MEDIA | MXF MXF+MP4 MP4

Recording Color Bars

You can choose between SMPTE standard-definition color bars and ARIB multi-format HDTV color bars.

1 Open the color bars [Type] submenu.
[Camera Setup] ➤ [Color Bars] ➤ [Type]

2 Select the type of color bars and then press SET.

3 Open the [Enable] submenu to activate the color bars.
[Camera Setup] ➤ [Color Bars] ➤ [Enable]

4 Select [On] and then press SET.
- The selected color bars appear on the screen and will be recorded when you press the START/STOP button.
- Turning the camcorder off or changing the operating mode to MEDIA mode will deactivate the color bars.

[Camera Setup] ▸ [Color Bars] ▸ [Type] ▸ [SMPTE]

[Camera Setup] ▸ [Color Bars] ▸ [Enable] ▸ [Off]

NOTES
- When you want to display the color bars, set the custom picture file to [Off] (📖 132) or set the [Other Functions] ➤ [Over 100%] setting in the custom picture file to [Through] (📖 140).
- If you set an assignable button to [Color Bars] (📖 129), you can press the button turn the color bars on/off.

Recording an Audio Reference Signal

The camcorder can output a 1 kHz audio reference signal with the color bars.

1 Open the [1 kHz Tone] submenu.
[Audio Setup] ➤ [Audio Input] ➤ [1 kHz Tone]

2 Select the desired level and then press SET.
- Available levels are -12 dB, -18 dB and -20 dB.
- Select [Off] to turn off the signal.
- The signal is output at the selected level and will be recorded when you press the START/STOP button.

[Audio Setup] ▸ [Audio Input] ▸ [1 kHz Tone] ▸ [Off]

Video Scopes

The camcorder can display a simplified waveform monitor or vectorscope. It can also display an edge monitor* to help you focus. The video scopes appear only on the OLED screen. They do not appear in the viewfinder or on an external monitor.

* The edge monitor looks at the focus of the entire picture and displays the results as a waveform. The edge monitor is available only in CAMERA mode.

Displaying a Video Scope

Operating modes: CAMERA MEDIA | MXF MXF+MP4 MP4

Press the WFM button.

- The waveform monitor will appear in a window on the lower right of the screen.
- You can repeatedly press the WFM button to activate the video scopes in the following sequence.
  Waveform monitor → Vectorscope → Edge monitor → Off
- Alternatively, you can display the video scopes using [Other Functions] [WFM (OLED)] [Setting]. Select [WFM] for the waveform monitor, [VS] for the vectorscope or [Edge Mon.] for the edge monitor.

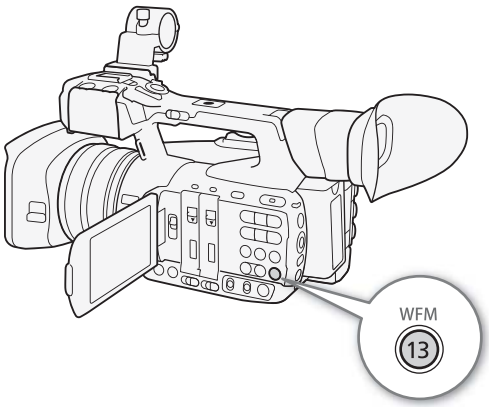

Configuring the Waveform Monitor

The camcorder's waveform monitor function offers 5 modes. You can also change the gain.

Operating modes: CAMERA MEDIA | MXF MXF+MP4 MP4

[Other Functions] → [WFM (OLED)] → [Waveform Monitor] → [Type] → [Line]

1 Open the waveform monitor [Type] submenu.
[Other Functions] [WFM (OLED)] [Waveform Monitor] [Type]

2 Select the desired option and then press SET.
- If you do not need to change the gain, you do not need to perform steps 3 and 4.

3 Open the waveform monitor [Gain] submenu.
[Other Functions] [WFM (OLED)] [Waveform Monitor] [Gain]

4 Select [1x] or [2x] and then press SET.

Options

[Line]:	Sets the waveform monitor to line display mode.
[Line+Spot]:	The waveform of the area in the red frame is displayed in red on top of the [Line] mode waveform.
[Field]:	Sets the waveform monitor to field display mode.
[RGB]:	Functions like an RGB parade scope.
[YPbPr]:	Functions like a YPbPr parade scope.

Configuring the Vectorscope

[Other Functions] > [WFM (OLED)] > [Vectorscope] > [Type] > [Normal]

The camcorder's vectorscope function offers 2 modes. You can also change the gain.

Operating modes: CAMERA MEDIA | MXF MXF+MP4 MP4

1 Open the vectorscope [Type] submenu.
[Other Functions] > [WFM (OLED)] > [Vectorscope] > [Type]

2 Select the desired option and then press SET.
- If you do not need to change the gain, you do not need to perform steps 3 and 4.

3 Open the vectorscope [Gain] submenu.
[Other Functions] > [WFM (OLED)] > [Vectorscope] > [Gain]

4 Select [1x] or [5x] and then press SET.

Options

[Spot]: The color signal of the area in the red frame is displayed in red on top of the [Normal] mode waveform.

[Normal]: Displays the vectorscope.

Configuring the Edge Monitor

[Other Functions] > [WFM (OLED)] > [Edge Monitor] > [Type] > [Type 1]

Using this video scope allows you to focus with more precision. You can use the edge monitor along with the other focus assistance functions (84). The edge monitor features 2 modes.

Operating modes: CAMERA MEDIA | MXF MXF+MP4 MP4

1 Open the edge monitor [Type] submenu.
[Other Functions] > [WFM (OLED)] > [Edge Monitor] > [Type]

2 Select the desired option and then press SET.
- If you do not need to change the gain, you do not need to perform steps 3 and 4.

3 Open the edge monitor [Gain] submenu.
[Other Functions] > [WFM (OLED)] > [Edge Monitor] > [Gain]

4 Select the desired gain value and then press SET.

Options

[Type 1]: The waveform that represents the focus of the entire picture is displayed in green. In addition, the waveform of the area in the three red frames is displayed in red on top of the previous waveform.

[Type 2]: This mode displays the edge monitor with the waveform monitor in [Line+Spot] mode. The waveform monitor appears on the left in green while the edge monitor appears on the right in blue. The waveform of the area in the red frame is displayed in red on top of the edge monitor waveform.

Adding Marks to MXF Clips while Recording

When recording MXF clips, you can flag an important shot in a clip by adding a “shot mark” (S). There are two types of shot marks, shot mark 1 (S1) and shot mark 2 (S2), and you can add either or both types to a single MXF clip. You can also add an OK mark (OK) or check mark (✓) to the entire clip to flag clips you want to set apart. When the camcorder is in MEDIA mode, you can add or delete shot marks (📖 157). You can also display an index screen of all the shot marks (📖 155), allowing you to find a particular scene in a clip more quickly.

Operating modes: CAMERA MEDIA | MXF MXF+MP4 MP4

Adding Shot Marks while Recording

To add a shot mark to a clip while recording, you must first set in advance an assignable button to [Add Shot Mark 1] or [Add Shot Mark 2].

1 Set an assignable button to [Add Shot Mark 1] or [Add Shot Mark 2] (📖 129).
- To add both shot marks, set one assignable button to [Add Shot Mark 1] and another assignable button to [Add Shot Mark 2].

2 While you are recording, press the assignable button at the beginning of the shot you wish to mark.
- A message indicating the shot mark will appear and the selected shot mark will be added to the current frame of the clip.

ⓘ NOTES
- Up to 100 shot marks (S1 and S2 marks combined) can be added to a single MXF clip.
- There may be up to a 0.5 second delay from when you press the button to when the camcorder adds the shot mark.
- When you are using interval recording or frame recording mode, you cannot add shot marks to a clip.
- When an MXF clip contains either shot mark, S will appear next to the clip’s thumbnail in the playback index screen.

Adding an OK Mark or ✓ Mark to the Last Clip Recorded

After recording an important MXF clip, you can add an OK mark (OK) or check mark (✓) to the clip to flag it and set it apart. When the camcorder is in MEDIA mode, you can display an index screen that contains only clips with an OK mark or only clips with a ✓ mark (📖 146). Furthermore, you can use the OK mark to protect important clips, as MXF clips with an OK mark cannot be deleted.
To add an OK mark or ✓ mark to the last clip recorded in CAMERA mode, you must first set in advance an assignable button to [Add OK Mark] or [Add ✓ Mark].

1 Set an assignable button to [Add OK Mark] or [Add ✓ Mark] (📖 129).
- To add both types of clip marks (to different clips), set one assignable button to [Add OK Mark] and another assignable button to [Add ✓ Mark].

2 After recording a clip, press the assignable button.
- A message indicating the clip mark will appear and the selected clip mark will be added to the clip.

ⓘ NOTES
- A clip cannot have both an OK mark and a ✓ mark at the same time.

Using Metadata

The camcorder automatically adds metadata to MXF clips while they are being recorded. You can use **Canon XF Utility** to check and search for specific metadata. You can also create and transfer a user memo remotely using the Browser Remote application (182).

Metadata components

Metadata	Entering content			Checking content
	Camcorder	Canon XF Utility	Browser Remote	Canon XF Utility
User Memo: clip title, creator, location and description.	–	●[1]	●	●
GPS information: altitude, latitude and longitude.	●[2]	●[3]	●	●
Recording data: Shutter speed, gain value, etc.	–[4]	–	–	●
Unique Material Identifiers (UMID): country, organization and user codes based on the SMPTE standard.	● (208)	–	–	–

[1] User memo files need to be created using the software and saved on the SD card in advance.
[2] Only when an optional GP-E2 GPS Receiver is connected to the camcorder. While recording, GPS information is recorded automatically by the camcorder (114).
[3] GPS information can only be added to clips already recorded.
[4] Recording data is logged automatically by the camcorder.

Operating modes: CAMERA MEDIA | MXF MXF+MP4 MP4

Setting a User Memo Created with Canon XF Utility

Before you can add a user memo, you must first install **Canon XF Utility** (168). Next, create the user memo and save it to an SD card. Once you insert the SD card in the camcorder and select the user memo, it will be added to MXF clips you record.
For details on using the software, refer to the instruction manual that is installed with **Canon XF Utility** (170).

1 Use **Canon XF Utility** to save a user memo to an SD card.
- For details, refer to *Managing User Memo Profiles* in the Canon XF Utility Instruction Manual.

2 Insert the SD card into the SD card slot of the camcorder.

3 Open the metadata [Setting] submenu.
[Other Functions] ➤ [MXF] ➤ [Set Metadata] ➤ [Setting]

4 Select [SD Card] and then press SET.

5 Open the [User Memo] submenu.
[Other Functions] ➤ [MXF] ➤ [Set Metadata] ➤ [User Memo]

6 Select the file name of the desired user memo and then press SET.
- The MEMO icon appears on the right of the screen.
- Select [Off] to record clips without a user memo.

[Other Functions]
▽
[MXF]
▽
[Set Metadata]
▽
[Setting]
▽
[SD Card]

NOTES

- After you set a user memo, do not remove the SD card while you are recording. If the SD card is removed, the user memo will not be added to MXF clips.
- You must set the user memo before you start recording for it to be added to MXF clips. You cannot change the user memo already added to an MXF clip using the camcorder but you can do so with **Canon XF Utility**.

[Other Functions]
[MXF]
[Set Metadata]
[User Memo]

Setting a User Memo Using Browser Remote

After completing the necessary preparations (182), you can create a user memo profile and transfer it to the camcorder from a connected device using the Browser Remote application. Using the Browser Remote application you have two additional advantages over user memos created with **Canon XF Utility**: you can change the user memo of the last clip recorded, even if you did not specify a user memo in advance; and you can enter manually the GPS information of your shooting location as long as the optional GP-E2 GPS receiver is not connected to the camcorder.

1 Press the [Metadata Input] tab on the Browser Remote screen.

2 Press [Activate].

- Alternatively, on the camcorder, you can set [Other Functions] [MXF] [Set Metadata] [Setting] to [Remote].

3 Fill the necessary user memo and GPS information fields.

- You can press [Clear] to clear the information entered into each field.

4 Press one of the transfer options to transfer the metadata to the camcorder.

- [Metadata correctly transferred] will be displayed on the Browser Remote screen and the metadata will be transferred and applied to the clips on the camcorder.

5 Press to close the message.

Options

[Apply from Next]: Adds the metadata you set in Browser Remote to all MXF clips recorded after the transfer.

[Overwrite Prev.]: Only available after recording an MXF clip. Adds the metadata you set in Browser Remote to all MXF clips recorded after the transfer and also to the last MXF clip recorded (overwriting any user memo that may have been recorded previously with the clip).

[Overwrite]: Only available while recording an MXF clip. Adds the metadata you set in Browser Remote to the MXF clip that is being recorded (overwriting any previous user memo). It will also add this metadata to all MXF clips recorded after the transfer.

NOTES

- The metadata sent to the camcorder from Browser Remote will be lost in the following cases.
  - If the camcorder was turned off.
  - If the [Other Functions] [MXF] [Set Metadata] [Setting] setting was changed.
- Using Browser Remote ([Activate] button) you can give priority to metadata sent through the application. However, you cannot return the priority back to the SD card. To use a user memo file saved on the SD card you will need to set [Other Functions] [MXF] [Set Metadata] [Setting] to [SD Card] on the camcorder itself.
- Metadata sent to the camcorder from Browser Remote will not be added to relay clips recorded before the switch to the current CF card.

Recording GPS Information (Geotagging)

When the optional GP-E2 GPS Receiver is connected to the camcorder's USB terminal, the camcorder will automatically record the GPS information (longitude, latitude and altitude) to every recording you make (MXF clips, MP4 clips and photos). For MP4 clips and photos, the UTC (coordinated universal time) date and time will be recorded as well. For MXF clips, the GPS information is recorded as part of the clip's metadata and can be used to organize and search recordings using **Canon XF Utility** (📖 168).
In MEDIA mode, you can check whether a recording contains GPS information or not (📖 145, 151).

Connecting the GPS Receiver

Turn off the camcorder and the receiver. Connect the receiver to the camcorder's USB terminal using the USB cable*. While recording, place the receiver in the carrying case* and attach it to the camcorder's grip belt or carry it on your person. For details about connecting and using the receiver, refer to the GP-E2 Instruction Manual.
* Supplied with the optional GP-E2 GPS Receiver.

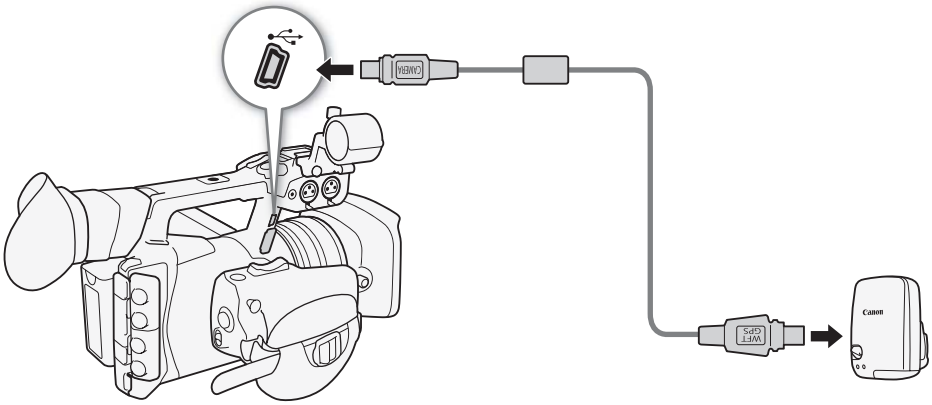

Activating the GPS Receiver

Operating modes: CAMERA MEDIA | MXF MXF+MP4 MP4

Turn on the camcorder and receiver.

- The icon appears on the right of the screen and will blink as the receiver tries to acquire satellite signals.
- When satellite signals are correctly acquired, the icon will stay continuously on. GPS functions will be activated and clips and photos recorded thereafter will be geotagged.

Adjusting the Date/Time Automatically According to GPS Position

Setting [Other Functions] [GPS Auto Time] to [On], you can have the camcorder automatically adjust its date and time settings according to the information received from the GPS signal while an optional GP-E2 GPS Receiver is connected to the camcorder.

- When [Other Functions] [GPS Auto Time] is set to [On], [Other Functions] [Time Zone] and settings in the [Other Functions] [Set Clock] submenu will not be available.
- While the Browser Remote application is in use, the automatic adjustment of the date/time will be deactivated.

IMPORTANT

- In certain countries/regions, the use of GPS may be restricted. Be sure to use the GPS receiver in accordance with local laws and regulations of the country/region where the receiver is used. Be particularly careful when traveling outside of your home country.
- Be careful about using the GPS receiver in places where the use of electronic devices is restricted.
- The GPS information recorded with clips and photos may contain data that can lead others to locate or identify you. Be careful when sharing geotagged recordings with others or when uploading them to the Web.
- Do not leave the GPS receiver near strong electromagnetic fields such as near powerful magnets and motors.

NOTES

- On the [GPS Information Display] status screen (📖 217), you can check the current GPS information and satellite signal strength.
- GPS signal reception may take some time after replacing the battery pack or when first turning on the camcorder after a long period without use.
- The camcorder is not compatible with the GPS receiver's digital compass and positioning interval functions. Also, the [Set now] option is not available for the [🔧 Other Functions] ▶ [GPS Auto Time] setting.
- GPS information will not be recorded with photos captured from a clip.

Reviewing a Recording

When the camcorder is in CAMERA mode, you can review the last clip that was recorded.

Operating modes: CAMERA MEDIA | MXF MXF+MP4 MP4

[Other Functions]
[Review Recording]
[Entire Clip]

1 Open the [Review Recording] submenu to set the review length.
[Other Functions] [Review Recording]

2 Select the desired option and then press SET.

3 After you finish recording, press the button.

- The last clip that was recorded is played back without audio for the selected duration. [▶ REVIEW] appears at the top of the screen.
- Press the CANCEL button to stop reviewing the clip and change the camcorder back to record pause mode.
- After the clip finishes playing back, the camcorder returns to record pause mode.

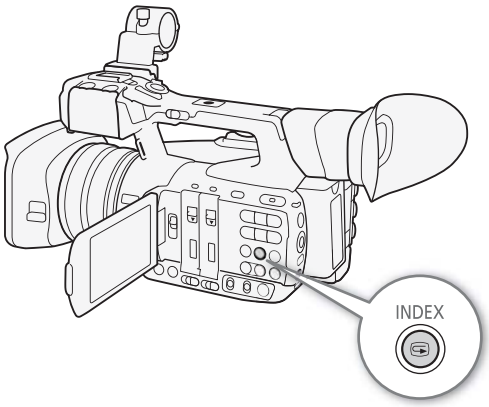

Options

[Entire Clip]: Allows you to review the entire clip.

[Last 4 sec]: Allows you to review just the last 4 seconds of the clip.

NOTES

- Clips cannot be reviewed when using a special recording mode (118) or when the movie format is set to MXF+MP4 (55).
- If the camcorder switched CF cards during the recording of an MXF clip, the camcorder will play back the clip on the CF card most recently recorded on.

File Numbering

MP4 clips and photos are automatically assigned consecutive numbers from 0001 to 9999, and stored on the SD card in folders containing up to 500 recordings. Folders are numbered from 100 to 999 and the last 4 digits of the folder name indicate the date when the folder was created. You can select the file numbering method to be used. We recommend using the [Continuous] setting.

Operating modes: CAMERA MEDIA | MXF MXF+MP4 MP4

1 Open the [File Numbering] submenu.
[Other Functions] [File Numbering]

2 Select the desired option and the press SET.

[Other Functions]
[File Numbering]
[Continuous]

Options

[Reset]: File numbers will restart from 100-0001 every time you insert a new SD card. If an SD card already contains previous recordings, file numbers will continue from the number following that of the last file on the SD card.

[Continuous]: File numbers will continue from the number following that of the last MP4 clip or photo recorded with the camcorder.

NOTES

- The file number indicates the name and location of the file on the SD card. For example, an MP4 clip/photo numbered 101-0107 that was recorded on 3 November, is located in the “DCIM**101**-1103” folder as the file “MVI_**0107**.MP4” or “IMG_**0107**.JPG”.

Special Recording Modes

The camcorder features 4 special recording modes for recording MXF clips. Only pre-recording is available for recording MP4 clips.

Interval recording: The camcorder will automatically record a pre-defined number of frames at a pre-defined interval. This mode is suitable for recording subjects with little movement, such as natural surroundings or plants.

Frame recording: The camcorder will record a pre-defined number of frames every time you press the START/STOP button. This mode is suitable for recording stop motion animation.

Slow & fast motion recording: This mode allows you to change the shooting frame rate to achieve a slow motion or fast motion effect during playback.

Pre-recording: The camcorder will start recording approximately 3 seconds before you press the START/STOP button. This is especially useful when it is difficult to predict when to start recording.

Interval Recording Mode

Set the interval and number of frames in advance. Sound is not recorded in this special recording mode.

Operating modes: CAMERA | MEDIA | MXF | MXF+MP4 | MP4

Configuring Interval Recording Mode

1 Open the [Interval] submenu.
[Other Functions] [Interval Recording] [Interval]

2 Select the desired interval and then press SET.
- See the following table for the available intervals.

3 Select [Recorded Frames], select the desired number of frames and then press SET.
- Available options depend on the frame rate used: 1, 3, 6 or 9 (23.98P, 29.97P, 59.94i), or 2, 6 or 12 (59.94P).

Available intervals

1 sec	2 sec	3 sec	4 sec	5 sec	6 sec	7 sec	8 sec	9 sec
10 sec	15 sec	20 sec	30 sec	40 sec	50 sec	1 min	2 min	3 min
4 min	5 min	6 min	7 min	8 min	9 min	10 min		

[Other Functions]
[Interval Recording]
[Interval]
[1 sec]

[Other Functions]
[Interval Recording]
[Recorded Frames]
[1]

Activating Interval Recording Mode and Recording

1 Open the [Special Recording] submenu.
[Other Functions] [Special Recording]

2 Select [Interval Recording] and then press SET.
- [INT STBY] appears at the top of the screen (with [INT] flashing).

3 Press the START/STOP button to begin recording.
- The camcorder automatically records the set number of frames at the set interval.
- The front and rear tally lamps illuminate.
- [INT STBY] changes to [● INT REC] while recording frames and [● INT STBY] while between intervals.

4 Press the START/STOP button again to stop recording.
- All of the recorded frames are joined together into one clip.

[Other Functions]
[Special Recording]
[Off]

- The front and rear tally lamps go out and [INT STBY] appears at the top of the screen (with [INT] flashing).

NOTES

- You can use only one special recording mode at a time.
- The interval and the number of frames recorded cannot be changed while recording.
- Some frames at the point the recording was stopped may be recorded and added to the end of the clip.
- Interval recording mode will be deactivated if the special recording mode is changed or turned off. It will be deactivated also if you change the movie format or video configuration.
- During this special recording mode, the time code's running mode (90) can be set to [Rec Run] or [Regen.] and the time code advances by the number of frames recorded. If the time code's running mode is set to [Free Run] or the time code is input from an external source, the running mode will switch to [Rec Run] during special recording mode. When the special recording mode is deactivated, the running mode will return to its previous setting.
- XF205 During special recording mode, the time code signal will not be output from the TIME CODE terminal, 3G/HD-SDI terminal or MON. terminal.

Frame Recording Mode

Set the number of frames in advance. We recommend operating the camcorder remotely or stabilizing the camcorder, for example, on a tripod. Sound is not recorded in this special recording mode.

Operating modes: CAMERA MEDIA | MXF MXF+MP4 MP4

Configuring Frame Recording Mode

1 Open the [Recorded Frames] submenu.
[Other Functions] ➤ [Frame Recording] ➤ [Recorded Frames]

2 Select the desired number of frames and then press SET.
- Available options depend on the frame rate used: 1, 3, 6 or 9 (23.98P, 29.97P, 59.94i), or 2, 6 or 12 (59.94P).

[Other Functions]
[Frame Recording]
[Recorded Frames]
[1]

Activating Frame Recording Mode and Recording

1 Open the [Special Recording] submenu.
[Other Functions] ➤ [Special Recording]

2 Select [Frame Recording] and then press SET.
- [FRM STBY] appears at the top of the screen (with [FRM] flashing).

3 Press the START/STOP button to begin recording.
- The camcorder automatically records the set number of frames.
- The front and rear tally lamps illuminate.
- [FRM STBY] changes to [● FRM REC] while recording frames and [● FRM STBY] when frames are not being recorded.
- Repeat until you finish recording.

4 Open the [Special Recording] submenu.
[Other Functions] ➤ [Special Recording]

5 Select [Off] and then press SET.
- Frame recording mode ends and all of the recorded frames are joined together into one clip.
- The tally lamps go out and [STBY] appears at the top of the screen.

[Other Functions]
[Special Recording]
[Off]

NOTES

- You can use only one special recording mode at a time.
- The number of frames recorded cannot be changed while recording.
- Some frames at the point the recording was stopped may be recorded and added to the end of the clip.
- Frame recording mode will be deactivated if the special recording mode is changed or turned off. It will be deactivated also if you change the movie format or video configuration.
- During this special recording mode, the time code's running mode (90) can be set to [Rec Run] or [Regen.] and the time code advances by the number of frames recorded. If the time code's running mode is set to [Free Run] or the time code is input from an external source, the running mode will switch to [Rec Run] during special recording mode. When the special recording mode is deactivated, the running mode will return to its previous setting.
- XF205 During special recording mode, the time code signal will not be output from the TIME CODE terminal, 3G/HD-SDI terminal or MON. terminal.

Slow & Fast Motion Mode

When you set the frame rate to a progressive frame rate (55), the camcorder can record with a frame rate (shooting frame rate) that is different from the playback frame rate. Recording a clip at a higher frame rate than the [Frame Rate] setting will result in a slow motion effect during playback (up to 40% of the original speed). Conversely, a lower frame rate will result in a fast motion effect (up to 5x the original speed). Sound is not recorded in this special recording mode.

Operating modes: CAMERA MEDIA | MXF MXF+MP4 MP4

Configuring Slow & Fast Motion Mode

1 Open the [S&F Frame Rate] submenu.
[Other Functions] [Slow & Fast Motion] [S&F Frame Rate]

2 Select the desired shooting frame rate and then press SET.
- Available shooting frame rates depend on the resolution used.

[Other Functions]
[Slow & Fast Motion]
[S&F Frame Rate]
[30]

Available shooting frame rates (fps)

12	15	18	20	21	22	24	25	26	27
28	30	32*	34*	36*	40*	44*	48*	54*	60*

* Available only when the resolution is set to 1280x720.

Activating Slow & Fast Motion Mode and Recording

1 Open the [Special Recording] submenu.
[Other Functions] [Special Recording]

2 Select [Slow & Fast Motion] and then press SET.
- [S&F STBY] appears at the top of the screen.
- The selected shooting frame rate appears on the right of the screen next to the frame rate setting (the playback frame rate).

[Other Functions]
[Special Recording]
[Off]

3 Press the START/STOP button to begin recording.
- The front and rear tally lamps illuminate.
- [S&F STBY] changes to [●S&F REC] while recording.

4 Press the START/STOP button again to stop recording.
- The clip is recorded at the selected frame rate.
- The tally lamps go out and [S&F STBY] appears at the top of the screen.

NOTES
- Slow & fast motion recording cannot be used together with other special recording modes or double slot recording.
- The shooting frame rate cannot be changed while recording.
- For lower shooting frame rates, it may take approximately 1 second to stop recording.
- Slow & fast motion mode will be deactivated if the special recording mode is changed or turned off. It will be deactivated also if you change the movie format or video configuration.
- When the bit rate is set to 50 Mbps (📖 55), relay recording is not available during slow motion recording.
- During this special recording mode, the time code's running mode (📖 90) can be set to [Rec Run] or [Regen.] and the time code advances by the number of frames recorded. If the time code's running mode is set to [Free Run] or the time code is input from an external source, the running mode will switch to [Rec Run] during special recording mode. When the special recording mode is deactivated, the running mode will return to its previous setting.
- XF205 During special recording mode, the time code signal will not be output from the TIME CODE terminal, 3G/HD-SDI terminal or MON. terminal.

Pre-recording Mode

[Other Functions] ▸ [Special Recording] ▸ [Off]

When pre-recording mode is activated, the camcorder starts recording continuously into a temporary memory of approximately 3 seconds so when you press the START/STOP button, the clip will contain also approximately 3 seconds of video and audio recorded before you pressed the button.

Operating modes: CAMERA MEDIA | MXF MXF+MP4 MP4

1 Open the [Special Recording] submenu.
[Other Functions] ▸ [Special Recording]

2 Select [Pre-Recording] and then press SET.
- [PRE REC STBY] appears at the top of the screen.

3 Press the START/STOP button to begin recording.
- The front and rear tally lamps illuminate.
- [PRE REC STBY] changes to [● PRE REC] while recording.

4 Press the START/STOP button again to stop recording.

- The camcorder records the clip, including approximately 3 seconds of video and audio recorded before the START/STOP button was pressed.
- The tally lamps go out and [PRE REC STBY] appears at the top of the screen.

NOTES

- During pre-recording mode, the time code will be recorded with the running mode (90) set to [Free Run], regardless of the previous setting. Alternatively, you can use an external time code signal. When the time code is recorded, it will include the 3 seconds before the START/STOP button was pressed. When the special recording mode is deactivated, the running mode will return to its previous setting.
- You can use only one special recording mode at a time.
- Pre-recording mode will be deactivated if you change the movie format or video configuration.

Simultaneous Recording of MXF and MP4 Clips

Setting the movie format to MXF+MP4, you can record simultaneously clips in MXF format and clips in MP4 format. When the movie format is set to MXF+MP4, start and stop recording the MXF clip with the START/STOP button, as usual. You can select whether that action would automatically record also an MP4 clip (MXF+MP4 simultaneous recording) or whether to assign a separate control to start and stop recording MP4 clips (MP4 backup recording).

MXF+MP4 Simultaneous Recording: The camcorder will record the same scene in two different formats.

MP4 Backup Recording: The camcorder will keep recording continuously in MP4 format, ensuring that you never miss important shooting opportunities. You can set the [Bit Rate/Resolution] setting of MP4 clips to [3 Mbps 640x360] or link it to the video configuration of the MXF clips.

Operating modes: CAMERA MEDIA | MXF MXF+MP4 MP4

Video configurations of MXF clips and MP4 clips

MXF Clips			MP4 Clips				
[Bit Rate/Resolution][1]			[Bit Rate/Resolution][2] set to [Linked to MXF]			[Bit Rate/Resolution][2] set to [3 Mbps 640x360]	
Bit rate	Resolution	Frame rate	Bit rate	Resolution	Frame rate	Bit rate/ Resolution	Frame rate
50 Mbps	1920x1080	59.94i	35 Mbps	1920x1080	59.94i	3 Mbps/ 640x360	29.97P
		29.97P	24 Mbps		29.97P		
		23.98P			23.98P		23.98P
	1280x720	59.94P	17 Mbps	1280x720	59.94P		29.97P
		29.97P	9 Mbps		29.97P		
		23.98P			23.98P		23.98P
35 Mbps	1920x1080	59.94i	35 Mbps	1920x1080	59.94i		29.97P
		29.97P	24 Mbps		29.97P		
		23.98P			23.98P		23.98P
	1440x1080	59.94i	35 Mbps		59.94i		29.97P
	1280x720	59.94P	17 Mbps	1280x720	59.94P		
		29.97P	9 Mbps		29.97P		
		23.98P			23.98P		23.98P
25 Mbps	1440x1080	59.94i	35 Mbps	1920x1080	59.94i		29.97P
		29.97P	24 Mbps		29.97P		
		23.98P			23.98P		23.98P

[1] [Other Functions] [MXF] [Bit Rate/Resolution].
[2] [Other Functions] [MP4] [Bit Rate/Resolution] (when the movie format is set to MXF+MP4).

1 Set the movie format to [MXF (CF)+MP4 SD] (55).
- At the top of the screen both [MP4] and [STBY] will appear. The time code running mode will change to [Free Run] and start advancing.

2 Open the MP4 [Bit Rate/resolution] submenu.
[Other Functions] ➤ [MP4] ➤ [Bit Rate/Resolution]

3 Select [3 Mbps 640x360] or [Linked to MXF] and then press SET.
- Refer to the previous table to check the resulting video configuration for MP4 clips.

4 Open the MP4 [Rec Control] submenu.
[Other Functions] ➤ [MP4] ➤ [Rec Control]

5 Select the desired option and then press SET.

[Other Functions]
[MP4]
[Bit Rate/Resolution]
[Linked to MXF]

[Other Functions]
[MP4]
[Rec Control]
[START/STOP Button]

Options

[START/STOP Button]: Every time you press the START/STOP button, the camcorder will start or stop recording simultaneously an MXF clip on the CF card and an MP4 clip on the SD card. Use this setting for MXF+MP4 simultaneous recording.

[Assignable Buttons]: You can start or stop recording the MP4 clip using the menu ([Other Functions] ➤ [MP4] ➤ [Start/Stop] ➤ [Start] or [Stop]) or an assignable button set to the [MP4 Start/Stop] function (129). Use this setting for MP4 backup recording.

Recording in MP4 Backup Recording Mode

When [Other Functions] ➤ [MP4] ➤ [Rec Control] is set to [Assignable Buttons] the actions that control the recording of MXF clips and MP4 clips (the backup recording) are separate.

1 Open the MP4 [Start/Stop] menu.
[Other Functions] ➤ [MP4] ➤ [Start/Stop]

2 Select [Start] and then press SET to start recording the backup MP4 clip.
- The front and rear tally lamps will illuminate, [MP4] changes to [●MP4] and the recording of the MP4 clip will begin.
- You can also set an assignable button to [MP4 Start/Stop] and press the assignable button.

3 Press the START/STOP button to record an MXF clip simultaneously with the MP4 clip.
- [STBY] changes to [●REC] and the recording of the MXF clip will begin.

4 Press the START/STOP button again to stop recording the MXF clip.
- [●REC] changes to [STBY] and the MXF clip is recorded on the CF card.
- Repeat steps 3 and 4 as necessary to record additional MXF clips. All along, the recording of the backup MP4 clip will continue.

5 To stop recording the MP4 clip, open the MP4 [Start/Stop] menu.
- [Other Functions] ➤ [MP4] ➤ [Start/Stop]

[Other Functions]
[MP4]
[Start/Stop]
[Stop]

6 Select [Stop] and then press SET.

- The front and rear tally lamps will go out, [●MP4] will change back to [MP4] and the MP4 clip is recorded on the SD card.
- You can also set an assignable button to [MP4 Start/Stop] and press the assignable button.

NOTES

- If any memory card becomes full during MXF+MP4 simultaneous recording, recording will stop on all recording media. If a memory card becomes full during MP4 backup recording, recording will stop only on the memory card that is full and continue on other recording media.
- Simultaneous recording cannot be used together with other special recording modes or real-time proxy transfer mode.
- While recording, the [Free Run] time code will be recorded with the MXF clip.

Infrared Recording

Using the infrared mode, the camcorder becomes more sensitive to infrared light, allowing you to record in dark locations. You can use the camcorder's own infrared light to keep shooting even in very dark conditions. Also, you can select whether the brighter areas of the picture appear in green or white.

Operating modes: CAMERA MEDIA | MXF MXF+MP4 MP4

Activating Infrared Mode

Follow the procedure below to set the camcorder to infrared mode and to set the color of bright areas in the picture.

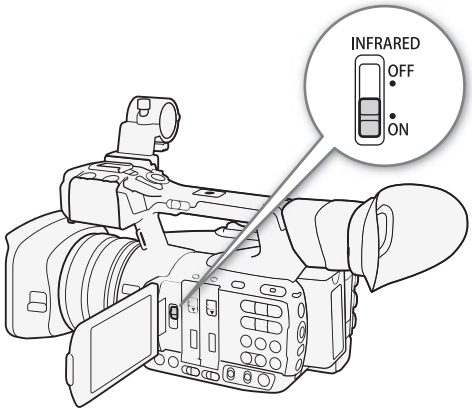

1 Move the INFRARED switch to ON.
- [Infrared] and the OFF icon will appear at the left of the screen.
- The INFRARED switch will be more accessible when the OLED panel is at a vertical position.

2 Open the [Monochrome] submenu to select a color.
[Camera Setup] [Infrared] [Monochrome]

3 Select [White] or [Green] and then press SET.

[Camera Setup]
[Infrared]
[Monochrome]
[White]

Using the Infrared Light

You can turn the infrared light on and off using an assignable button or the menu.

1 Open the [Light] submenu.
[Camera Setup] [Infrared] [Light]

2 Select the desired option and then press SET.
- When the infrared light is on, the icon will appear on the left of the screen.

[Camera Setup]
[Infrared]
[Light]
[Toggle]

Options

[Toggle]: Allows you to turn the infrared light on and off using an assignable button. Set an assignable button (129) to [Infrared Light] in advance and press the assignable button to turn the infrared light on/off.

[Always On]: The infrared light is always on while the camcorder is in infrared mode.

[Always Off]: The infrared light is always off.

NOTES

- When the camcorder is in infrared mode, the following adjustments are made automatically.
  - Gain, shutter speed and aperture are adjusted automatically and ND filters are not used.
  - AGC limit, light metering, AE shift, white balance and custom picture settings cannot be used.
  - The camcorder will switch from manual focus to autofocus so the focus point may change. Check that the focus is correct.
- Depending on the light source, autofocus may not work well while zooming.
- When the camcorder is in infrared mode, do not point the lens at strong sources of light or heat. The camcorder's sensitivity to such sources is much higher than when shooting video normally. If there are such sources in the picture before you switch the camcorder to infrared mode, shield the lens first.
- If you set an assignable button to [Infrared Monochrome] (📖 129), you can press the button to change the color of the bright areas of an infrared recording.

Using the Focal Length Guide

The focal length guide aids you when using two camcorders for 3D recording. The guide appears as a numerical value and has a range of 202 steps. You can set the guide to 0 at any point in the zoom range to help precisely calibrate both camcorders.

Operating modes: CAMERA MEDIA | MXF MXF+MP4 MP4

1 Set up two camcorders and align their picture angle at full telephoto.

2 Open the [Focal Length] submenu.
[Camera Setup] ➤ [Zoom] ➤ [Focal Length]

3 Select [Set To 0] and then press SET.

4 Press MENU.
- The focal length guide appears on the left of the screen as [FL ±0]. To turn off the indicator, select [Off] instead.

5 Operate the zoom.
- If both camcorders are set so that the same value is displayed during zoom, the focal length for both camcorders will remain almost the same.

[Camera Setup]
▽
[Zoom]
▽
[Focal Length]
▽
[Off]

NOTES
- Although the focal length guide is an aid for 3D recording, make sure to check the picture angle visually while recording.
- You can obtain more accurate results when you perform this procedure at full telephoto.
- The same picture angle for both camcorders cannot be guaranteed.
- **When using the digital tele-converter or digital zoom**
  - When the focal length is reset to zero, the digital tele-converter or digital zoom is deactivated and [Camera Setup] ➤ [Zoom] ➤ [Mode] is set to [Normal] (optical zoom only).
  - If the focal length was reset to zero while the zoom was in the digital zoom range, the zoom position will change automatically to the telephoto end of the optical zoom.

Assignable Buttons

The camcorder conveniently features 13* buttons to which you can assign various functions. By assigning often-used functions, you can quickly access them with a single press of a button.

* In MEDIA mode, only assignable buttons 1 to 4 and 11 to 13 are available.

Operating modes: CAMERA MEDIA | MXF MXF+MP4 MP4

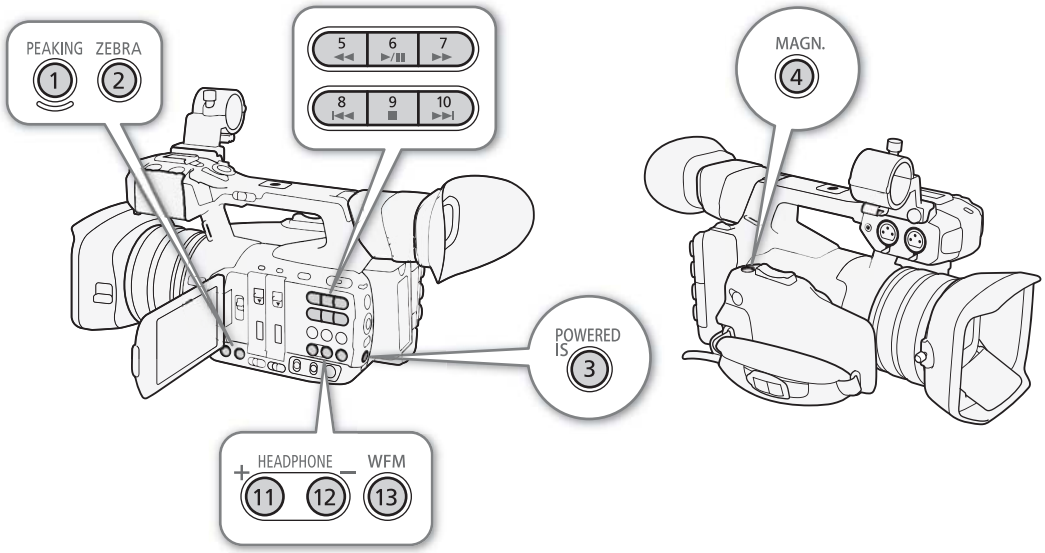

Changing the Assigned Function

1 Open the [Assignable Buttons] submenu.

[Other Functions] [Assignable Buttons]

2 Select the button to change and then press SET.

- A list of available functions appears.
- The quick reference shows the default settings for each assignable button. For assignable buttons 1 to 4 and 11 to 13, the label on the camcorder/grip indicates also the button's default setting. By default, buttons 5 to 10 have no assignable function set.

3 Select the desired function and then press SET.

- If you selected [User Setting], the menu will change from orange to blue to indicate you are selecting a menu setting to register. Continue the procedure to register a menu setting. Otherwise, you do not need to perform the rest of the procedure.

[Other Functions]

[Assignable Buttons]

[1 PEAKING]
[2 ZEBRA]
[3 POWERED IS]
[4 MAGN.]
[5-10 (NONE)]
[11 HEADPHONE +]
[12 HEADPHONE -]
[13 WFM]

4 Navigate the menus to find the menu setting you want to register and then press SET.

- The selected menu setting will be assigned to the button marked with a ★ to indicate that it is a user-selected setting.

NOTES

- You can check the two [Assignable Buttons] status screens (📖 210) to see what functions are set for the assignable buttons.
- You can reset only the functions assigned to the assignable buttons, without affecting other camera settings, with the [Other Functions] [Reset] [Assignable Buttons] function. All the assignable buttons will return to their default function.

Using an Assignable Button

After you assign a function to one of the assignable buttons, press the button to activate the function. For some functions, an options menu may appear. In such case, select the desired option and then press SET.

Remote Operation Using Browser Remote

After completing the necessary preparations (📖 182), you can use the functions assigned to assignable buttons 1 to 4 from a connected device using the Browser Remote application.

Press one of the assignable buttons 1 to 4 on the Browser Remote screen.

- You can check the functions assigned to these 4 assignable buttons on the Browser Remote screen.

NOTES

- Even if [Shutter Increment] is assigned to one of the assignable buttons 1 to 4, it cannot be used from the Browser Remote application.

Assignable Functions

Functions can be set separately in CAMERA mode and MEDIA mode. Refer to the following table for assignable functions and available modes.

Function name	Description	CAMERA	MEDIA	📖
[Img Stab.]	Turns image stabilization on/off.	●	–	87
[POWERED IS]*	Turns Powered IS on/off.	●	–	87
[Focus Limit]	Turns the focus limit on/off.	●	–	86
[Face AF]	Toggles the autofocus mode between [Face Priority], [Face Only] and [Off].	●	–	85
[Backlight]	Turns the [Backlight] light metering option on/off.	●	–	68
[Spotlight]	Turns the [Spotlight] light metering option on/off.	●	–	
[Digital Zoom]	Turns the digital zoom on/off.	●	–	74

Function name	Description	CAMERA	MEDIA	📖
[Tele-converter]	Activates the digital tele-converter in the following sequence: 1.5x → 3x → 6x → Off	●	–	74
[Wide-End Angle]	Toggles the angle of view at wide-angle end between [Normal] and [Wider].	●	–	74
[Gain Mode]	Toggles the gain mode between [Automatic] and [Manual].	●	–	62
[Shutter Mode]	Toggles the shutter speed mode between [Automatic] and [Manual].	●	–	58
[Shutter Increment]	Changes the shutter speed increment between [Normal] and [Fine].	●	–	
[WB Mode]	Toggles the white balance mode between automatic white balance (AWB) and the current position of the WHITE BAL. switch.	●	–	69
[PEAKING]	Turns peaking on/off.	●	–	84
[ZEBRA]	Turns zebra patterns on/off.	●	–	89
[WFM]	Activates video scopes in the following sequence: Waveform monitor → Vectorscope → Edge monitor (CAMERA mode only) → Off	●	●	108
[MAGN.]	Turns magnification on/off.	●	–	84
[TL-H58]	Sets the [Camera Setup] [Conversion Lens] setting to [TL-H58] or [Off].	●	–	80
[WA-H58]	Sets the [Camera Setup] [Conversion Lens] setting to [WA-H58] or [Off].	●	–	
[Color Bars]	Turns color bars on/off.	●	–	107
[Infrared Monochrome]	Switches between white and green when the camcorder is in infrared mode.	●	–	126
[Infrared Light]	Turns the infrared light on/off when [Camera Setup] [Infrared] [Light] is set to [Toggle].	●	–	126
[Markers]	Turns onscreen markers on/off.	●	–	88
[OLED Setup]	Opens the [OLED Setup] submenu.	●	●	34
[Viewfinder Setup]	Opens the [Viewfinder Setup] submenu.	●	●	34
[OLED/VF B&W]	Turns the B&W mode of the OLED screen and viewfinder on/off.	●	●	35
[Onscreen Display]	Turns on/off the inclusion of onscreen displays on video output from the camcorder's terminals (both HD and SD video output).	●	●	165
[MP4 Start/Stop]**	Starts or stops recording an MP4 clip.	●	–	123
[MP4 FTP Transfer]*	Adds the MP4 clip that was just recorded to the FTP transfer queue.	●	–	190
[Add Shot Mark 1]	Adds an S1 mark to the clip.	●	●	110
[Add Shot Mark 2]*	Adds an S2 mark to the clip.	●	●	
[Add OK Mark]	Adds an OK mark to the clip.	●	●	152
[Add ✓ Mark]	Adds a ✓ mark to the clip.	●	●	
[Time Code]	Displays the [Time Code] submenu.	●	–	90
[Time Code Hold]*	Puts the time code display on hold or resumes it.	●	●	91
[HEADPHONE +]	Increases the headphone volume.	●	●	149
[HEADPHONE -]	Reduces the headphone volume.	●	●	
[Monitor Channels]	Switches the audio output channel.	●	●	166
[Audio Level]	Turns the audio level meter on/off.	●	●	105, 106
[Wireless Controller]	Turns the supplied wireless controller on/off.	●	●	44
[Photo]*	Records a photo.	●	●	195
[Status]*	Displays the status screens.	●	●	209
[My Menu]	Opens the [My Menu] customized submenu.	●	–	30
[Initialize Media]	Opens the [Initialize Media] submenu.	●	●	41
[User Setting]*	Customizable slot. Assign to the button any menu setting you would like to register.	●	●	–

* This function can be used only by assigning it to an assignable button.
** This function can only be assigned to assignable buttons 1 to 4.

Custom Picture Settings

You can preset a number of picture-related settings (📖 135). After changing individual settings to your preference, you can save the whole set in the camcorder or on an SD card as a custom picture file. You can then load the file at a later date to change the current settings to the preset levels you selected. You can even add custom picture settings to MXF clips recorded on a CF card.
You can save up to 9 different custom picture files on the camcorder and up to 20 custom picture files on an SD card. Custom picture files can be copied between the camcorder and SD card.
Custom picture files created with this camcorder are compatible only with other XF200 / XF205 camcorders.

Operating modes: CAMERA MEDIA | MXF MXF+MP4 MP4

Selecting Custom Picture Files

Select a custom picture file to easily apply its settings to your recordings or to edit, rename, protect, or transfer it.

[Camera Setup]
[Custom Picture]
[SET CP Select File]
[Off]

1 Open the [Custom Picture] submenu.
[Camera Setup] ➤ [Custom Picture]

2 Select [SET CP Select File] and then press SET.
- The default custom picture file is [Off]. A list of custom picture files in the camcorder and SD card appears. Files in the camcorder begin with [C1] to [C9]; those on the SD card begin with [SD1] to [SD20].

3 Select the desired file and then press SET.
- Select [Off] to record without applying any custom picture settings.
- To apply the custom picture settings of the selected file, continue to step 4. To perform other operations on the selected file (edit settings, copy, protect, etc.), continue instead with the one of the procedures in the following pages.

4 Press the MENU button to exit the menu.
- The selected custom picture file's settings will be applied. CP (camcorder) or CP (SD card) and the custom picture file's number will appear on the left of the screen.

Preset Custom Picture Files

By default, custom picture files [C8] and [C9] in the camcorder are protected. Remove the protection (📖 133) to edit the file.

[C8: S/N Pri.]: Preset settings that give priority to the image's signal-to-noise (S/N) ratio.

[C9: Wide DR]: Applies a gamma curve with a very wide dynamic range and an appropriate color matrix.

NOTES

- **About changing custom picture related settings using the optional RC-V100 Remote Controller**
  - When the remote controller is connected to the camcorder, you can press the remote controller's CUSTOM PICT. button to open/close the [Custom Picture] submenu.
  - If a protected custom picture file or no custom picture file is selected on the camcorder ([SET CP Select File] is set to [Off]), custom picture related settings cannot be changed using the remote controller.
  - While the remote controller is connected to the camcorder, custom picture files on the SD card ([SD1] to [SD20]) cannot be used. If you connect the remote controller while a custom picture file on the SD card was selected, the custom picture file will change automatically to [Off] (recording without custom picture settings). To use the settings of a custom picture file saved on the SD card, copy the file in advance from the SD card to an open file slot in the camcorder (📖 134).

- Adjusting custom picture related settings using the remote controller will change the settings registered under the currently selected custom picture file. If you want to keep an important custom picture file, copy it in advance to the SD card or select in advance a custom picture file you do not mind changing.

Editing a Custom Picture File's Settings

1 After selecting a file, select [CP Edit File] and then press SET.

2 Select a setting and then press SET.

3 Change the setting to the desired level and then press SET.

- Refer to the table *Available Custom Picture Settings* (135) for details on the various settings.
- Repeat steps 2 and 3 for other settings, as necessary.

4 Press the MENU button to exit the menu.

- The new custom picture settings will be applied. CP (camcorder) or CP (SD card) and the custom picture file's number will appear on the left of the screen.

Resetting the current file's settings to default values

1 Select [Reset] and then press SET.

2 Select the default values and then press SET.

- Select [Normal] to reset to neutral default values (equivalent to not using custom picture settings at all), or [S/N Pri.] or [Wide DR] if you want to replicate the preset settings, for example as a starting point to edit them further.

3 Select [OK] and then press SET.

Renaming Custom Picture Files

[CP Edit File]

[Rename]

1 After selecting a file, open the [Rename] submenu.

[CP Edit File] ➤ [Rename]

- A screen appears that displays the current file name with an orange selection frame on the first character.

2 Push the joystick up/down to select an alphanumeric character or symbol then push it right to move to the next field.

- Change the rest of the name in the same way.

3 Select [Set] and then press SET.

4 Press the MENU button to exit the menu.

Protecting Custom Picture Files

[CP Edit File]

[Protect]

Protecting a custom picture file prevents its settings from being accidentally changed.

1 After selecting a file, open the [Protect] submenu.

[CP Edit File] ➤ [Protect]

2 Select [Protect] and then press SET.

- In the custom picture menu, will appear next to the file name.
- To remove protection settings, select [Unprotect] instead.

3 Press the MENU button to exit the menu.

Transferring Custom Picture Files

You can transfer custom picture files between the camcorder and SD card. When the selected custom picture file is in the camcorder, use [Copy To SD] or [Load From SD] depending on the operation you wish to perform. Similarly, when the selected custom picture file is on an SD card, use [Copy To Cam.] or [Load From Cam].

Copying a File from the Camcorder to an SD Card

[CP Transfer File]

[Copy To SD]

1 After selecting a file in the camcorder, open the [Copy To SD] submenu.
[CP Transfer File] ❯ [Copy To SD]

2 Select the file slot on the SD card under which to save the file and then press SET.
- If there are available slots, you can select [New File] to save the file in the first available slot.

3 Select [OK] and then press SET.
- The currently selected file will be copied to the selected slot on the SD card, overwriting the file in that slot. When the confirmation screen appears, press SET.

4 Press the MENU button to exit the menu.

Replacing a File in the Camcorder with a File on an SD Card

[CP Transfer File]

[Load From SD]

1 After selecting a file in the camcorder to replace, open the [Load From SD] submenu.
[CP Transfer File] ❯ [Load From SD]

2 Select the file to transfer to the camcorder and then press SET.

3 Select [OK] and then press SET.
- The file in the camcorder will be overwritten by the one on the SD card. When the confirmation screen appears, press SET.

4 Press the MENU button to exit the menu.

Copying a File from an SD Card to the Camcorder

[CP Transfer File]

[Copy To Cam.]

1 After selecting a file on the SD card, open the [Copy To Cam.] submenu.
[CP Transfer File] ❯ [Copy To Cam.]

2 Select the file slot under which to save the file and then press SET.

3 Select [OK] and then press SET.
- The currently selected file will be copied to the selected slot on the camcorder, overwriting the file in that slot. When the confirmation screen appears, press SET.

4 Press the MENU button to exit the menu.

Replacing a File on an SD Card with a File in the Camcorder

[CP Transfer File]

[Load From Cam.]

1 After selecting a file on the SD card to replace, open the [Load From Cam.] submenu.
[CP Transfer File] ❯ [Load From Cam.]

2 Select the file to transfer to the SD card and then press SET.

3 Select [OK] and then press SET.
- The file on the SD card will be overwritten by the one on the camcorder. When the confirmation screen appears, press SET.

4 Press the MENU button to exit the menu.

NOTES
- You can also copy to the camcorder a custom picture file embedded in an MXF clip (155).

Embedding Custom Picture Settings in a Recording

By default, when you record MXF clips using custom picture settings, the custom picture file is saved along with the MXF clip. Later, you can copy the custom picture file embedded in the MXF clip to the camcorder (155) and use the same custom picture settings to record additional clips. You may find that embedding custom picture settings in a recording helps you keep track of them, such as verifying what settings were used for a particular recording.

[Other Functions] > [MXF] > [Clips] > [Add CP File] > [On]

1 Open the [Add CP File] submenu.
[Other Functions] > [MXF] > [Clips] > [Add CP File]

2 Select [On] or [Off] and then press SET.

Available Custom Picture Settings

The following are the available settings. Even if no custom picture file is selected, the default settings are still applied to the picture.

[Gamma]

The gamma curve changes the overall look of the image. Generally, this should be the same setting as [Select] under [Color Matrix]. (Default: [Normal 1]).

[Normal 1] to [Normal 4]: These settings are suitable for viewing the image on a TV monitor. Highlights in [Normal 2] are brighter than those of [Normal 1]. Dark tones in the lower part of the gamma curve for [Normal 3] (ITU-R BT.709 standard) and [Normal 4] are more pronounced than those of [Normal 2].

[Cine 1] or [Cine 2]: Use [Cine 1] for a gamma curve that results in a picture with a cinema-like feel and cinema-like tones. [Cine 2] has softer contrasts than does [Cine 1] but is also suitable for creating a cinema-like picture.

[Wide DR]: Applies a gamma curve with a very wide dynamic range, optimized for playback on an HDTV.

Gamma

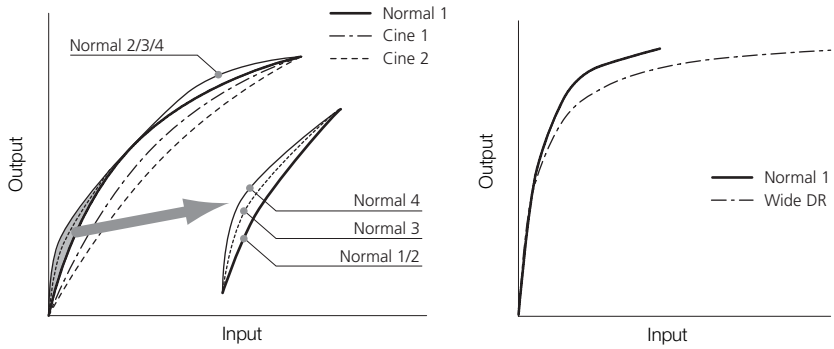

[Black]

Controls the black level and color cast of blacks.

[Master Pedestal]: The master pedestal increases or decreases the black level. Higher settings will make dark areas brighter but decrease contrast. This setting can be adjusted from -50 to 50. (Default: ±0)

[Master Black]: Corrects color cast in blacks.

[Red]: -50 to 50 (Default: ±0)

[Green]: -50 to 50 (Default: ±0)

[Blue]: -50 to 50 (Default: ±0)

[Black Gamma]

Controls the lower part of the gamma curve (dark areas of the image). When [Gamma] is set to [Wide DR], this setting has no effect on the picture.

[Level]: Raises or lowers the lower part of the gamma curve. This setting can be adjusted from -50 to 50. (Default: ±0)

[Range]: Selects the range in which dark areas are affected. This setting can be adjusted from -20 to 50. (Default: ±0)

[Point]: Determines the shape of the lower part of the gamma curve. This setting can be adjusted from -20 to 50. (Default: ±0)

Black Gamma

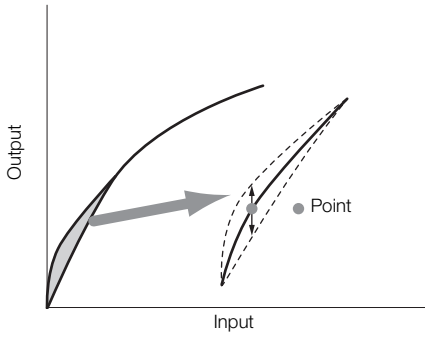

[Low Key Satur.]

Adjusts color saturation in dark areas.

[Enable]: Activates/deactivates the setting. (Default: [Off])

[Level]: Specifies how saturated colors are in dark areas. This setting can be adjusted from -50 to 50. (Default: ±0)

[Knee]

Controls the upper part of the gamma curve (highlights of the image). By compressing the highlights, you can prevent parts of the image from being overexposed. When [Gamma] is set to [Cine 1], [Cine 2] or [Wide DR], this setting has no effect on the picture.

[Enable]: Activates/deactivates the setting. (Default: [On])

[Automatic]: Select [On] to have the camcorder automatically set the knee point and slope to prevent images being overexposed so quickly. Select [Off] to manually adjust the knee point. (Default: [On])

[Slope]: Determines the slope of the gamma curve above the knee point. This setting can be adjusted from -35 to 50. (Default: ±0)

[Point]: Sets the knee point of the gamma curve. This setting can be adjusted from 50 to 109. (Default: 95)

[Saturation]: Adjusts color saturation in highlights. This setting can be adjusted from -10 to 10. (Default: ±0)

Knee Slope

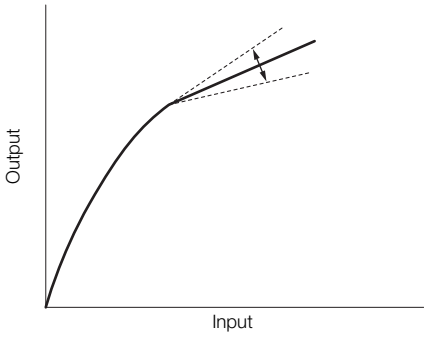

Knee Point

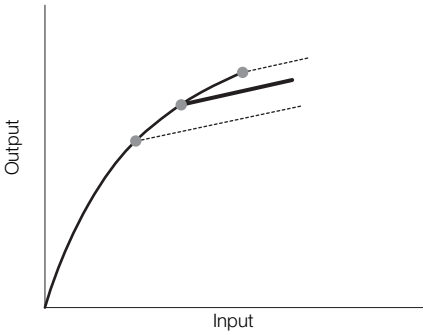

[Sharpness]

Sets the sharpness of the output and recording signal.

[Level]: Sets the sharpness level. This setting can be adjusted from -10 to 50. (Default: ±0)

[H Detail Freq.]: Sets the center frequency of horizontal sharpness. Setting higher values increases the frequency, which, in turn, increases the sharpness. This setting can be adjusted from -8 to 8. (Default: ±0)

[Coring]: Reduces noise artifacts caused by high sharpness levels.

- [Level]: Sets the coring level. Higher values prevent sharpness from being applied to minute details, resulting in less noise. This setting can be adjusted from -30 to 50. (Default: ±0)
- [D-Ofst]: You can use [D-Ofst], [D-Curve] and [D-Depth] to adjust the coring level based on brightness. [D-Ofst] sets the coring level of the minimum brightness level. This setting can be adjusted from 0 to 50. (Default: 0)
- [D-Curve]: Sets the curve of the coring adjustment. This curve is the change from [Level] to [D-Ofst]. This setting can be adjusted from 0 to 8. (Default: 0)
- [D-Depth]: Sets a multiplier to [D-Ofst] that determines the coring level adjustment based on brightness. Positive values raise the coring level in dark areas and negative values lower the level. This setting can be adjusted from -4 to 4. (Default: ±0)

[HV Detail Bal.]: Adjusts the ratio between horizontal and vertical detail. Higher values emphasize vertical detail while lower values emphasize horizontal detail. This setting can be adjusted from -8 to 8. (Default: ±0)

[Limit]: Restricts how much sharpness is applied. This setting can be adjusted from -50 to 50. (Default: ±0)

[Knee Aperture]: Allows you to set the sharpness of only the areas above the knee point by adjusting the gain and slope. When [Gamma] is set to [Cine 1], [Cine 2] or [Wide DR], this setting has no effect on the picture.

[Gain]: Sets the amount of sharpness. This setting can be adjusted from 0 to 9. (Default: 0)

[Slope]: Sets the slope of the sharpness. This setting can be adjusted from 0 to 3, with 0 having no slope, 1 having a steep slope and 3 having a gradual slope. (Default: 1)

[Level Depend]: Lowers the amount of sharpness applied to dark areas of the image.

[Level]: Sets the brightness of the dark areas of the image that will be affected. This setting can be adjusted from 0 to 50. (Default: 0)

[Slope]: Determines the slope of the area between the upper and lower parts of the gamma curve. This setting can be adjusted from 0 to 3, with 0 having no slope, 1 having a steep slope and 3 having a gradual slope. (Default: 0)

[Offset]: Adjusts the sharpness level of dark areas in the image. Setting higher values will lower the sharpness level. This setting can be adjusted from 0 to 50. (Default: 0)

[Ingredient Ratio]: Changing this ratio allows you to affect the balance between resolution and the reduction of jagged edges. Higher values emphasize resolution while lower values emphasize the reduction of jagged edges. This setting can be adjusted from -50 to 50. (Default: 0)

[Noise Reduction]

Reduces the amount of noise that appears in the image. Select [Automatic] to have the camcorder adjust the noise automatically. Otherwise, select a level from 1 (lowest level) to 12 (highest level), or select [Off] to turn the noise reduction off. (Default: [Off])

[Skin Detail]

The camcorder applies a softening filter to areas in the picture with skin tones to give a more pleasant appearance. By changing these settings, you can determine what areas will be detected as skin tones. A zebra pattern will appear over areas on the screen that are detected as having skin tones.

[Effect Level]: Adjusts the level of the filter. The available options are [Off], [Low], [Middle] and [High]. (Default: [Off])

[Hue]: Adjusts the hue for detection of skin tones. This setting can be adjusted from -16 to 16. (Default: ±0)

[Chroma]: Adjusts the color saturation for detection of skin tones. This setting can be adjusted from 0 to 31. (Default: 16)

[Area]: Adjusts the color range for detection of skin tones. This setting can be adjusted from 0 to 31. (Default: 16)

[Y Level]: Adjusts the brightness for detection of skin tones. This setting can be adjusted from 0 to 31. (Default: 16)

[Selective NR]

The camcorder detects the characteristics of a certain color or tone and applies a noise reduction filter to the targeted areas. A zebra pattern will appear over targeted areas on the screen.

[Effect Level]: Adjusts the level of the noise reduction filter. The available options are [Off], [Low], [Middle] and [High]. (Default: [Off])

[Hue]: Adjusts the hue for the color to be detected. This setting can be adjusted from 0 to 31. (Default: 0)

[Chroma]: Adjusts the color saturation for the color to be detected. This setting can be adjusted from 0 to 31. (Default: 16)

[Area]: Adjusts the color range for the color to be detected. This setting can be adjusted from 0 to 31. (Default: 16)

[Y Level]: Adjusts the brightness for the color to be detected. This setting can be adjusted from 0 to 31. (Default: 16)

[Color Matrix]

Color matrix affects the color tones throughout the whole image.

[Select]: Available options are [Normal 1] to [Normal 4], [Cine 1] and [Cine 2] and [Wide DR]. Generally, this should be the same setting as [Gamma]. After selecting an option, you can make more precise adjustments. (Default: [Normal 1])

[Gain]: Adjusts the color intensity. This setting can be adjusted from -50 to 50. (Default: ±0)

[Phase]: Adjusts the color phase. This setting can be adjusted from -18 to 18. (Default: ±0)

[R-G]: The R-G matrix changes the tint of the picture along the cyan/green and red/magenta gradations. This setting can be adjusted from -50 to 50. (Default: ±0)

[R-B]: The R-B matrix changes the tint of the picture along the cyan/blue and red/yellow gradations. This setting can be adjusted from -50 to 50. (Default: ±0)

[G-R]: The G-R matrix changes the tint of the picture along the magenta/red and green/cyan gradations. This setting can be adjusted from -50 to 50. (Default: ±0)

[G-B]: The G-B matrix changes the tint of the picture along the magenta/blue and green/yellow gradations. This setting can be adjusted from -50 to 50. (Default: ±0)

[B-R]: The B-R matrix changes the tint of the picture along the yellow/red and blue/cyan gradations. This setting can be adjusted from -50 to 50. (Default: ±0)

[B-G]: The B-G matrix changes the tint of the picture along the yellow/green and blue/magenta gradations. This setting can be adjusted from -50 to 50. (Default: ±0)

[White Balance]

Adjusts the amount of white balance throughout the whole image.

[R Gain]: Adjust the intensity of red tones. This setting can be adjusted from -50 to 50. (Default: ±0)

[B Gain]: Adjust the intensity of blue tones. This setting can be adjusted from -50 to 50. (Default: ±0)

[Color Correction]

The camcorder detects the characteristics of a certain color (color phase, chroma, area and Y level) and corrects them when recording. You can set the color correction for up to two different areas (A and B).

[Select Area]: Selects the area or areas to correct. Available options are [Area A], [Area B] and [Area A&B]. Select [Off] to turn this setting off. (Default: [Off])

[Area A Setting]: Determines the area in which colors will be corrected.

- [Phase]: Adjusts the color phase for area A. This setting can be adjusted from 0 to 31. (Default: 0)
- [Chroma]: Adjusts the color saturation for area A. This setting can be adjusted from 0 to 31. (Default: 16)
- [Area]: Adjusts the color range for area A. This setting can be adjusted from 0 to 31. (Default: 16)
- [Y Level]: Adjusts the brightness for area A. This setting can be adjusted from 0 to 31. (Default: 16)

[Area A Revision]: Sets the amount of correction for area A.

- [Level]: Adjusts the amount of correction to the color saturation. This setting can be adjusted from -50 to 50. (Default: ±0)
- [Phase]: Adjusts the amount of correction to the color phase. This setting can be adjusted from -18 to 18. (Default: ±0)

[Area B Setting]: Determines the area in which colors will be corrected.

- [Phase]: Adjusts the color phase for area B. This setting can be adjusted from 0 to 31. (Default: 0)
- [Chroma]: Adjusts the color saturation for area B. This setting can be adjusted from 0 to 31. (Default: 16)
- [Area]: Adjusts the color range for area B. This setting can be adjusted from 0 to 31. (Default: 16)
- [Y Level]: Adjusts the brightness for area B. This setting can be adjusted from 0 to 31. (Default: 16)

[Area B Revision]: Sets the amount of correction for area B.

- [Level]: Adjusts the amount of correction to the color saturation. This setting can be adjusted from -50 to 50. (Default: ±0)
- [Phase]: Adjusts the amount of correction to the color phase. This setting can be adjusted from -18 to 18. (Default: ±0)

[Other Functions]

[Setup Level]: Adjusts the black level set by the [Black] and [Master Pedestal] settings. This setting can be adjusted from -50 to 50. (Default: ±0)

[Over 100%]: This function determines how the camcorder handles video signals exceeding 100%. Available options are [Through] to do nothing, [Clip] to clip the signal at 100%, and [Press] that compresses a signal of up to 108% down to 100% levels. (Default: [Through])

[S/N Priority]: Select [On] to give priority to the image's S/N ratio. (Default: [Off])

NOTES

- When an optional RC-V100 Remote Controller is connected to the camcorder, the following custom picture settings can be changed using the buttons and dials on the remote controller. They cannot be changed from the camcorder while the RC-V100 is connected.
  - [Black] ➤ [Master Pedestal]; [Black] ➤ [Master Black] ➤ [Red], [Blue]
  - [Black Gamma] ➤ [Level]
  - [Knee] ➤ [Slope] and [Point] (only when [Knee] ➤ [Enable] is set to [On])
  - [Sharpness] ➤ [Level]
  - [White Balance] ➤ [R Gain], [B Gain]

Customizing Functions and Onscreen Displays

Customize the camcorder to match your shooting style and needs. Use the [Other Functions] [Custom Function] settings to adjust how some of the camcorder's controls and functions operate in CAMERA mode. Similarly, use the [OLED/VF Setup] [Custom Display 1] or [Custom Display 2] settings to customize the onscreen displays that appear during recording. You can save these preferences along with other menu settings to an SD card and use them again later (143).

Operating modes: CAMERA MEDIA | MXF MXF+MP4 MP4

Customizing Functions

The following table describes which functions can be customized using [Custom Function].

[Other Functions]

[Custom Function]

1 Open the [Custom Function] submenu.
[Other Functions] [Custom Function]

2 Select the desired function.

3 Change the setting option and then press SET.

Customizable functions with [Custom Function]

Menu item	Description
[Shockless Gain]	Determines the speed of the transition when the gain is changed.
[Shockless WB]	Creates a softer transition when the white balance is changed.
[AE Response]	Controls the camcorder's responsiveness for changing the aperture during automatic aperture mode.
[Iris Limit]	Sets a maximum aperture value (F8.0) to be used for shooting.
[Iris Ring Direction]	Changes the direction of the adjustment when turning the iris ring.
[Focus Ring Direction]	Changes the direction of the adjustment when turning the focus ring.
[Zoom Ring Direction]	Changes the direction of the adjustment when turning the zoom ring.
[Focus Ring Control]	Selects the sensitivity of the response when operating the focus ring.
[Zoom Ring Control]	Selects the sensitivity of the response when operating the zoom ring.
[Focus Assistance B&W]	Automatically switches the screen to B&W while the focus assistance functions (peaking and magnification) are activated. You can have the screen switch to B&W when only the peaking is activated, when only the magnification is activated or when both are activated.
[Distance Units]	Selects the units of distance (meters or feet) displayed when the camcorder shows the distance to the subject in manual focus mode.
[Zoom Indicator]	Selects the display of the zoom indicator between a graphic bar and a numeric display (0 to 99; 0 to 81 when [Camera Setup] [Conversion Lens] is set to [WA-H58]; 0 to 149 when digital zoom is activated).
[Scan Reverse Rec]	Inverts the recorded image horizontally and/or vertically.
[OSD Recording]	When this function is set to [On], all of the onscreen displays will be recorded to the MXF clip exactly as they appear on the screen.

Customizing Onscreen Displays

[OLED/VF Setup]

[Custom Display 1]
[Custom Display 2]

For details on which onscreen displays can be customized, refer to *Onscreen Displays* (51).

1 Open the [Custom Display 1] or [Custom Display 2] submenu.
[OLED/VF Setup] [Custom Display 1] or [Custom Display 2]

2 Select the desired onscreen display.

3 Change the setting option and then press SET.

- Most onscreen elements can be turned [On] or [Off]. A few elements, like the zoom display, will have the option to be displayed all the time ([Always On]) or only while operated ([Normal]); others, like the remaining battery or remaining recording time, will have the option to be displayed all the time ([Normal]) or only when they are at a warning level ([Only warnings]).

Saving and Loading Camera Settings

After you adjust custom picture settings and settings in the various menus, you can save those settings on an SD card. You can load those settings at a later date or on another XF205 or XF200 camcorder so that you can use that camcorder in that same exact way.

Operating modes: CAMERA MEDIA | MXF MXF+MP4 MP4

Saving Camera Settings to an SD Card

[Other Functions] ▸ [Transfer Menu/CP] ▸ [Save To SD]

1 Open the [Save To SD] submenu.

[Other Functions] ▸ [Transfer Menu/CP] ▸ [Save To SD]

2 Select [Menu] or [Menu+CP] and then press SET.

- Selecting [Menu] will save menu settings and [Menu+CP] will save menu and custom picture settings.

3 Select [OK] and then press SET.

- The current settings are saved to the SD card. If the SD card already has camera settings on it, they will be overwritten.

4 When the confirmation screen appears, press SET.

Loading Camera Settings from an SD Card

[Other Functions] ▸ [Transfer Menu/CP] ▸ [Load From SD]

1 Open the [Load From SD] submenu.

[Other Functions] ▸ [Transfer Menu/CP] ▸ [Load From SD]

2 Select [Menu] or [Menu+CP] and then press SET.

- Selecting [Menu] will load menu settings and [Menu+CP] will load menu and custom picture settings.

3 Select [OK] and then press SET.

- After the camcorder's current settings are replaced with the settings saved on the SD card, the screen will turn black momentarily and the camcorder will restart.

NOTES

- The following settings are not saved on the SD card.
  - Encryption keys/passwords under [Other Functions] ▸ [Network Settings] ▸ [Connection Settings]
  - Passwords under [Other Functions] ▸ [Network Settings] ▸ [Remote Settings] ▸ [Users Settings]
  - [Other Functions] ▸ [Network Settings] ▸ [FTP Server Settings] ▸ [Password]
- When loading camera settings from an SD card, even protected custom picture files in the camcorder will be replaced.
- Only camera settings from other XF200 / XF205 camcorders can be used with this camcorder.

Playback

This section explains how to play back clips with the camcorder. For details on playing back clips using an external monitor, refer to *Connecting to an External Monitor* (📖 162). For details on viewing photos on the SD card, refer to *Viewing Photos* (📖 197).

Operating modes: CAMERA | MEDIA | MXF | MXF+MP4 | MP4

MXF and MP4 Clip Index Screens

Playback functions are accessed from the index screen. To open the MXF clip index screen or [MP4] index screen, set the camcorder to MEDIA mode.

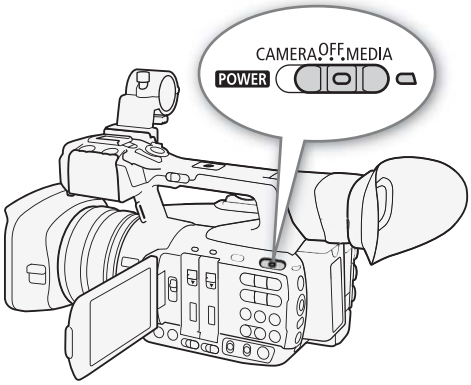

Hold down the button on the POWER switch and slide the switch to MEDIA.

- The camcorder switches to MEDIA mode and the index screen appears.

MXF clips

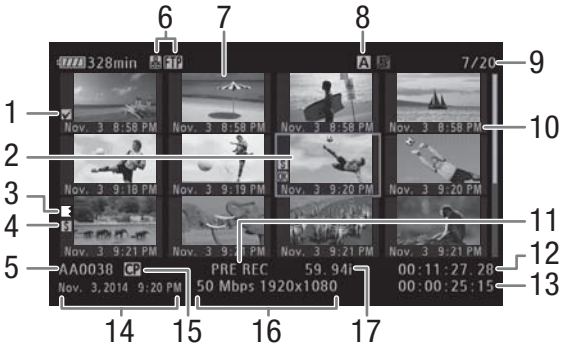

MP4 clips

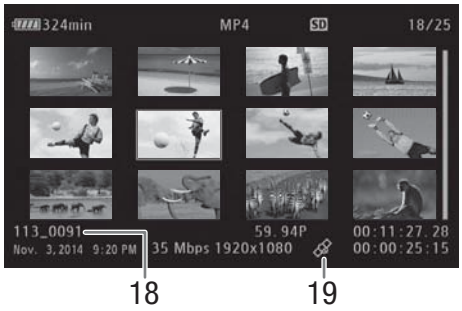

1 OK mark/ ☑ mark[1] (📖 110, 152)
2 Orange selection frame
3 Relay recording[1] (📖 148, see the explanation for icon number 8)
4 Shot mark[1] (📖 110, 157)
5 MXF clip name[1] (📖 49)
6 Network type/FTP file transfer (📖 173, 189)
7 Clip thumbnail (📖 158)
8 Currently selected recording media (📖 41)
9 Clip number / Total number of clips
10 Recording date (month and day only) and time[1]
11 Special recording mode[1] (📖 118)
12 Time code of thumbnail[1]
13 Total recording time
14 Recording date and time
15 Embedded custom picture file[1] (📖 132)
16 Bit rate and resolution (📖 55)
17 Frame rate[2] (📖 55)
18 File number[3] (📖 117)
19 Clip geotagged with GPS information[3] (📖 111, 114)

[1] MXF clips only.
[2] For MXF clips recorded using slow & fast motion mode, the shooting frame rate and playback frame rate will both be displayed.
[3] MP4 clips only.

Switching Between the CF Card Slots

If both CF card slots contain a CF card, you can switch between them as necessary.

Operating modes: CAMERA MEDIA | MXF MXF+MP4 MP4

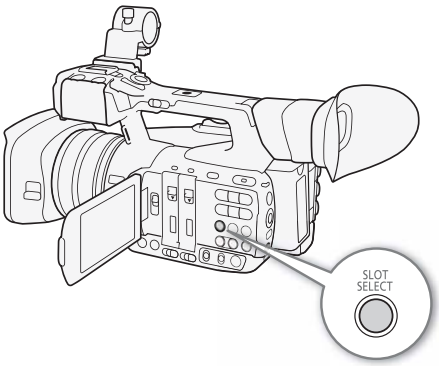

Press the SLOT SELECT button.

- The access indicator of the selected CF card slot will illuminate in green.

Switching to Other Index Screens

All of the MXF clips on a CF card can be accessed from the MXF clip index screen. However, you can switch to other index screens that show only MXF clips with an OK mark ([OK Mark] index screen), MXF clips with a ☑ mark ([☑ Mark] index screen), MP4 clips* ([MP4] index screen) or photos* ([Photos] index screen).

* Photos and MP4 clips are saved on the SD card.

Operating modes: CAMERA MEDIA | MXF MXF+MP4 MP4

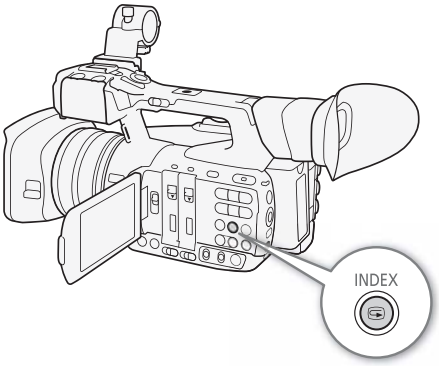

1 Press the INDEX button.
- The index screen selection menu appears.

2 Select the desired index screen and then press SET.
- The selected index screen appears.
- Select [Cancel] instead to cancel the operation.
- Press the INDEX button again to return to the MXF clip index screen.

Playing Back Clips

You can play back clips from the MXF clip index screen, [OK Mark] index screen, [✓ Mark] index screen and [MP4] index screen. Use the playback control buttons on the camcorder or use the joystick and joystick guide. You can also use the supplied wireless controller.

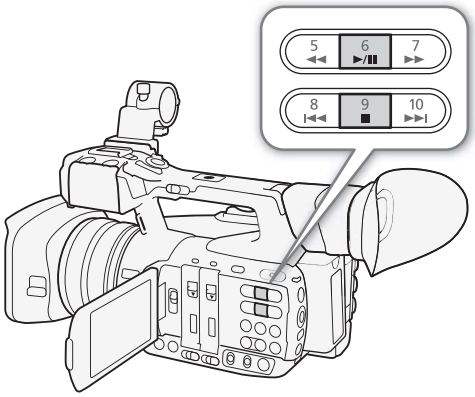

1 In the index screen, move the orange selection frame to the clip you want to play back.

2 Press the ►/❚❚ button to start playback.

- Playback will start from the clip selected and continue until the end of the last clip in the index screen. When the last frame of the last clip is reached, playback will be paused.
- Press the ►/❚❚ button again or press SET to pause/resume the playback.
- Press the ■ button to stop the playback and return to the index screen.

IMPORTANT

- Observe the following precautions while any access indicators are illuminated or flashing in red. Failure to do so may result in permanent data loss.
  - Do not disconnect the power source or turn off the camcorder.
  - Do not open the CF card slot cover or the SD card slot cover of the recording media being accessed and do not remove the recording media.

NOTES

- You may notice brief stops in video or audio playback between clips.

Onscreen Displays

MXF clips

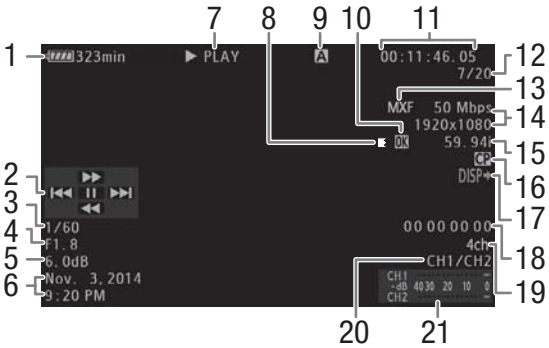

MP4 clips

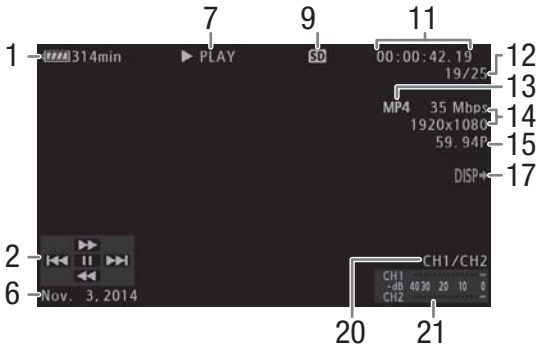

1 Remaining battery charge (📖 51)
2 Joystick guide (📖 148)
3 Shutter speed[1] (📖 58)
4 Aperture value[1] (📖 65)
5 Gain[1] (📖 62)
6 Recording date and time[2]
7 Playback operation
8 Relay recording[3]
9 Currently selected recording media (📖 41)
10 OK mark/ ☑ mark[3] (📖 110, 152)
11 Time code (📖 90)
12 Clip number / Total number of clips
13 Movie format (📖 55)
14 Bit rate and resolution (📖 55)
15 Frame rate[4] (📖 55)
16 Embedded custom picture file[3] (📖 135)
17 Output displays (📖 165)
18 User bit[3] (📖 93)
19 4-channel audio[3] (📖 100)
20 Audio output channels (📖 166)
21 Audio level meter

[1] Appears for MXF clips only, when [OLED/VF Setup] ➤ [Display Metadata] ➤ [Camera Data] is set to [On].
[2] Appears when [OLED/VF Setup] ➤ [Display Metadata] ➤ [Date/Time] is set to [On]. For MP4 clips, only the date of recording appears.
[3] MXF clips only.
[4] For MXF clips recorded using slow & fast motion mode, the shooting frame rate and playback frame rate will both be displayed.

7 Playback operation

▶ PLAY	Playback
❚❚ PAUSE	Playback pause
◀❚❚/❚❚▶	Frame reverse/Frame advance
F FWD ▶▶	Fast playback*
◀◀ F REV	Fast reverse playback*

* The playback speed (x5, x15 or x60) will also appear in the indicator.

8 Relay recording

Appears when an MXF clip begins on one CF card and continues uninterrupted on the other. indicates the first part of the recording, indicates the middle part(s) and indicates the last part.

Playback Controls

When you play back a clip, operate the buttons on the camcorder, the joystick and joystick guide or the supplied wireless controller. Refer to the following table.

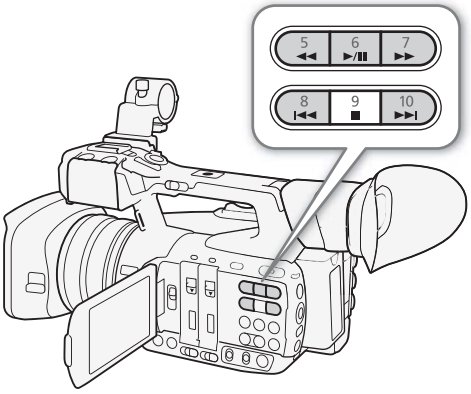

Available playback types

Playback type	Operation
Fast playback	Buttons: Press the ◀◀ or ▶▶ button. Joystick: During playback, push the joystick up or down. Wireless controller: Press the ◀◀ or ▶▶ button. Repeat to increase the playback speed to approximately 5x → 15x → 60x the normal speed.
Frame advance/reverse	Joystick: During playback pause, push the joystick up or down. Wireless controller: Press the ◀II or II▶ button (during playback pause).
Skip to the beginning of the next clip	Buttons: Press the ▶▶I button. Joystick: Push the joystick right. Wireless controller: Press the button.
Skip to the beginning of the current clip	Buttons: Press the I◀◀ button. Joystick: Push the joystick left. Wireless controller: Press the button.
Skip to the previous clip	Buttons: Press the I◀◀ button twice. Joystick: Push the joystick left twice. Wireless controller: Press the button twice.
Return to playback mode	Buttons: Press the ▶/II button. Joystick: Press the joystick itself (SET button). Wireless controller: Press the ▶/II button.

NOTES

- There is no audio during any of the playback types listed in the previous table.
- During some special playback modes, you may notice some anomalies (blocky video artifacts, banding, etc.) in the playback picture.
- The speed indicated on the screen is approximate.
- During frame advance, the time advanced between frames depends on the video configuration used: 0.2 seconds (for 1280x720/59.94P MXF clips) or 0.5 seconds for other video configurations.
- You can press the DISP. button to turn the joystick guide display on and off.

Adjusting the Volume

During playback, audio will be output from the monaural built-in speaker (on the grip) or from the stereo (headphone) terminal. When you connect headphones to the (headphone) terminal, the built-in speaker will be muted. The audio signal will also be output through the 3G/HD-SDI terminal*, MON. terminal*, HDMI OUT terminal and AV OUT terminal.

* XF205 only.

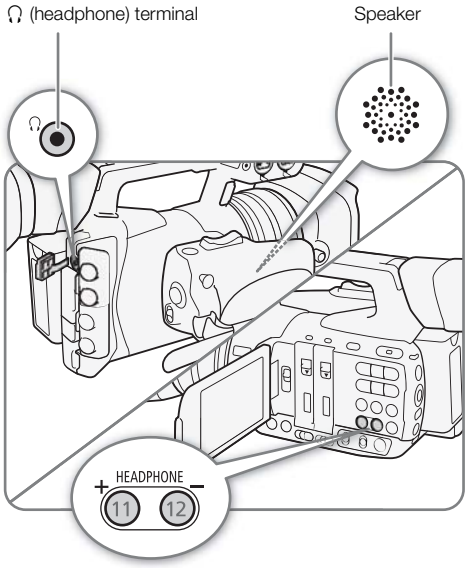

Press the HEADPHONE +/- buttons to adjust the volume.

NOTES

- For details on changing the audio channel, refer to *Selecting the Audio Channel* (166).
- You can also adjust the headphone or built-in speaker volume with the [Audio Setup] [Audio Output] [Headphone Volume] or [Speaker Volume] setting.

Clip Operations

Besides playing back a clip, you can perform other operations such as deleting a clip or displaying an MXF clip's clip information. This is done through the clip menu, which contains different functions depending on the index screen. You can use the functions in the [Other Functions] menu to perform some of the operations on all the clips or a selection of clips. Refer to the following table for available functions and refer to the following pages for more details of the functions.

Operating modes: CAMERA MEDIA | MXF MXF+MP4 MP4

MXF clip menu functions

Menu item	Description	Index screen			
		MXF clips	[OK Mark]/ [✓ Mark]	[Shot Mark][1]/ [Expand Clip]	📖
[Display Clip Info]	Displays various information about a clip.	●	●	–	151
[Add OK Mark]/ [Delete OK Mark]	Adds or deletes an OK mark.	●	●[2]	–	152
[Add ✓ Mark]/ [Delete ✓ Mark]	Adds or deletes a ✓ mark.	●	●[3]	–	
[Copy Clip]	Copies a clip from one CF card to the other.	●	●[2]	–	153
[Delete Clip]	Deletes a clip.	●	●[3]	–	154
[FTP Transfer]	Transfers the clip to a previously configured FTP server.	●	–		189
[Shot Mark]	Displays an index screen of all the frames of a clip that have either shot mark.	●	●	–	155
[Shot Mark 1]	Displays an index screen of all the frames of a clip that have the S1 mark.	●	●	–	
[Shot Mark 2]	Displays an index screen of all the frames of a clip that have the S2 mark.	●	●	–	
[Expand Clip]	Displays an index screen that shows frames of a clip at a fixed interval.	●	●	–	156
[Delete User Memo]	Deletes the user memo and GPS information of a clip.	●	●	–	155
[Copy CP File]	Copies the custom picture file from a clip to the camcorder.	●	●	–	155
[Add Shot Mark 1]/ [Del. Shot Mark 1]	Adds or deletes a S1 mark.	–	–	●	157
[Add Shot Mark 2]/ [Del. Shot Mark 2]	Adds or deletes a S2 mark.	–	–	●	
[Fewer Index Pics]	Decreases the number of thumbnails that are displayed.	–	–	●[4]	156
[More Index Pics]	Increases the number of thumbnails that are displayed.	–	–	●[4]	
[Pause]	Switches to playback of a clip with playback paused on the selected frame.	–	–	●	–
[Set Index Picture]	Sets the thumbnail used in the MXF clip index screen.	–	–	●	158

[1] Includes also the [Shot Mark 1] and [Shot Mark 2] index screens.
[2] [OK Mark] index screen only.
[3] [✓ Mark] index screen only.
[4] [Expand Clip] index screen only.

MP4 clip menu functions ([MP4] index screen)

Menu item	Description	📖
[Delete]	Deletes a clip.	154
[FTP Transfer]	Transfers the clip to a previously configured FTP server.	191

Using the Clip Menu

1 Select a clip and then press SET.

- The clip menu appears. Available functions depend on the index screen and which functions are enabled.

2 Select the desired function and then press SET.

- The function is enabled. For some functions, further action may be required. Follow the onscreen directions.
- Press the CANCEL button instead to return to the previous index screen.

IMPORTANT

- Observe the following precautions while any access indicators are illuminated or flashing in red. Failure to do so may result in permanent data loss.
  - Do not disconnect the power source or turn off the camcorder.
  - Do not open the CF card slot cover or the SD card slot cover of the recording media being accessed and do not remove the recording media.

Displaying Clip Information

Select [Display Clip Info] in the clip menu to display the selected clip's information screen ([Clip Info] screen). Push the joystick left/right to switch to the previous/next clip. When you are finished, press the CANCEL button to return to the MXF clip index screen.

Operating modes: CAMERA | MEDIA | MXF | MXF+MP4 | MP4

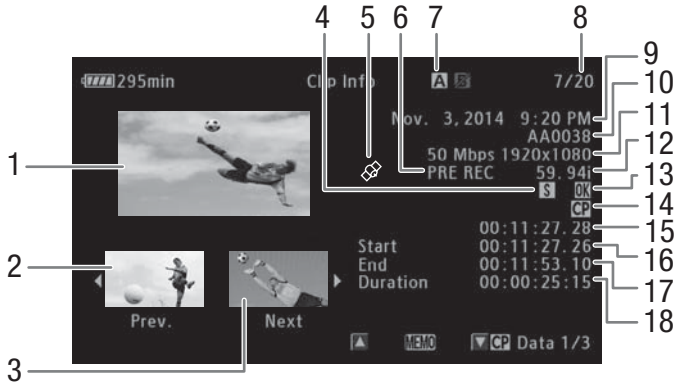

1 Thumbnail of the selected clip
2 Thumbnail of the previous clip
3 Thumbnail of the next clip
4 Shot mark (📖 110, 157)
5 Clip geotagged with GPS information (📖 111, 114)
6 Special recording mode (📖 118)
7 Currently selected CF card slot (📖 41)
8 Clip number / Total number of clips
9 Recording date and time
10 Clip name (📖 49)
11 Bit rate and resolution (📖 55)
12 Frame rate* (📖 55)
13 OK mark / ✔ mark (📖 110, 152)
14 Embedded custom picture file (📖 135)
15 Time code of the clip thumbnail
16 Time code of the first frame in clip
17 Time code of the last frame in clip
18 Clip duration

* For clips recorded using slow & fast motion mode, the shooting frame rate and playback frame rate will both be displayed.

Displaying the User Memo

From the [Clip Info] screen, push the joystick up to display the [MEMO] screen. In this screen you can check details about the embedded user memo. Push the joystick down to return to the [Clip Info] screen.

Displaying Custom Picture Settings

When displaying the [Clip Info] screen of a clip that has a custom picture file recorded with it, push the joystick down to display the first of three screens with the clip's custom picture settings ([CP Data 1/3] screen). Repeatedly push down the joystick to check the information screens in the following order: [CP Data 2/3] screen → [CP Data 3/3] screen → [MEMO] screen → [Clip Info].

Adding OK Marks or ✓ Marks

If you add an OK mark (OK) or check mark (✓) to MXF clips, you can later display an index screen that shows only the clips with an OK mark or only the clips with a ✓ mark. Furthermore, you cannot delete clips with an OK mark so you can use this mark to protect important clips.

Operating modes: CAMERA | MEDIA | MXF | MXF+MP4 | MP4

Adding an OK Mark or ✓ Mark during Playback

To add an OK mark (OK) or check mark (✓) to a clip during playback or playback pause, you must first set an assignable button to [Add OK Mark] or [Add ✓ Mark] in advance.

1 Set an assignable button to [Add OK Mark] or [Add ✓ Mark] (📖 129).
- To add both types of clip marks (to different clips), set one assignable button to [Add OK Mark] and another assignable button to [Add ✓ Mark].

2 During playback or playback pause, press the assignable button to add the clip mark.
- A message indicating the clip mark will appear and the selected clip mark will be added to the clip.
- Adding a clip mark to a clip during playback will pause the playback.

Adding an OK Mark or ✓ Mark from the Index Screen

1 Select the desired clip and then press SET to open the clip menu.

2 Select [Add OK Mark] or [Add ✓ Mark] and then press SET.
- The clip information screen appears and it prompts you to confirm the operation.

3 Select [OK] and then press SET.
- The screen changes back to the MXF clip index screen and an OK mark or ✓ appears next to the selected clip's thumbnail.
- Select [Cancel] instead to cancel the operation.

ⓘ NOTES

- If you set an assignable button to [Add OK Mark] or [Add ✓ Mark] (📖 129), you can add an OK mark or ✓ mark to MXF clips from the index screen, during playback or during playback pause.
- A clip cannot have both an OK mark and ✓ mark at the same time. When you add a ✓ mark to a clip with an OK mark, the OK mark will be deleted. Similarly, when you add an OK mark to a clip with a ✓ mark, the ✓ mark will be deleted.

Deleting OK Marks or ☑ Marks

Operating modes: CAMERA MEDIA | MXF MXF+MP4 MP4

Deleting an OK Mark or ☑ Mark from a Clip

1 Select the desired clip and then press SET to open the clip menu.
2 Select [Delete OK Mark] or [Delete ☑ Mark] and then press SET.
- The clip information screen appears and it prompts you to confirm the operation.

3 Select [OK] and then press SET.
- The screen changes back to the MXF clip index screen the selected mark is deleted.
- Select [Cancel] instead to cancel the operation.

Deleting OK Marks from All Clips

[Other Functions]
[Delete All OK Marks]

1 Open the [Delete All OK Marks] submenu.
[Other Functions] ➤ [Delete All OK Marks]
2 Select [OK] and then press SET.
- All OK marks from clips on the selected CF card will be deleted.
- Select [Cancel] instead to cancel the operation.
- While the OK marks are being deleted, you can press SET to cancel.

3 When the confirmation message appears, press SET.

Copying Clips

You can copy MXF clips from one CF card to the other. The copied clips will retain their original name.

Operating modes: CAMERA MEDIA | MXF MXF+MP4 MP4

Copying a Single Clip

1 Select the desired clip and then press SET to open the clip menu.
2 Select [Copy Clip] and then press SET.
- The clip information screen appears and it prompts you to confirm the operation. You can also check the available space on both CF cards.

3 Select [OK] and then press SET.
- Select [Cancel] instead to cancel the operation.
- While the clip is being copied, you can press SET to cancel.

4 When the confirmation message appears, press SET.
- The selected clip is copied to the other CF card and the screen changes back to the MXF clip index screen.

Copying Multiple Clips

[Other Functions]
[Clips]
[Copy]

1 Open the [Copy] submenu.
[Other Functions] ➤ [Clips] ➤ [Copy]
2 Select [Select] to select which clips to copy, [OK Mark] to copy all the clips with an OK mark, or [All] to copy all the clips, and then press SET.

- If you selected [Select], use the joystick to move between the clips. Press SET to select a clip to copy and repeat as necessary (up to 100 clips). After selecting all the desired clips, press the MENU button.

3 Select [OK] and then press SET.
- All the applicable clips on the selected CF card will be copied to the other CF card.
- Select [Cancel] instead to cancel the operation.
- While the clips are being copied, you can press SET to cancel.

4 When the confirmation message appears, press SET.

NOTES
- You cannot copy a clip if either CF card slot cover is open.
- If a clip is being copied to a card that already has a clip with the same number (the last 4 digits in the clip name), the copied clip will be renamed with the following number.

Deleting Clips

You can delete any clip except for MXF clips with an OK mark. To delete such clips, delete the OK mark beforehand.

Operating modes: CAMERA MEDIA | MXF MXF+MP4 MP4

Deleting a Single Clip

1 Select the desired clip and then press SET to open the clip menu.

2 Select [Delete Clip] (MXF clips) or [Delete] (MP4 clips) and then press SET.
- You will be prompted to confirm the operation. For MXF clips only, the clip information will be displayed on the screen as well.

3 Select [OK] and then press SET.
- Select [Cancel] instead to cancel the operation.
- While the clip is being deleted, the operation cannot be canceled.

4 When the confirmation message appears, press SET.

Deleting Multiple Clips

[Other Functions] > [Clips] > [Delete]

1 Open the [Delete] submenu.
[Other Functions] > [Clips] > [Delete]

2 Select [Select] to select which clips to delete or [All] to delete all the clips and then press SET.
- If you selected [Select], use the joystick to move between the clips. Press SET to select a clip to delete and repeat as necessary (up to 100 clips). After selecting all the desired clips, press the MENU button.

3 Select [OK] and then press SET.
- All the applicable clips on the selected recording media will be deleted.
- Select [Cancel] instead to cancel the operation.
- While the clips are being deleted, you can press SET to cancel.

4 When the confirmation message appears, press SET.

Deleting the User Memo and GPS Information

Operating modes: CAMERA MEDIA | MXF MXF+MP4 MP4

1 Select the desired clip and then press SET to open the clip menu.

2 Select [Delete User Memo] and then press SET.
- The [Delete User Memo] screen appears and it prompts you to confirm the operation.

3 Select [OK] and then press SET.
- The user memo and GPS information is deleted and the screen changes back to the MXF clip index screen.
- Select [Cancel] instead to cancel the operation.

Copying a Custom Picture File Embedded in a Clip

You can copy the custom picture file embedded in an MXF clip to the camcorder.

Operating modes: CAMERA MEDIA | MXF MXF+MP4 MP4

1 Select the desired clip (a clip with the CP icon) and then press SET to open the clip menu.

2 Select [Copy CP File] and then press SET.
- The [CP Data 1/3] screen appears with the orange selection frame indicating a custom picture file slot in the camcorder.
- You can push the joystick up/down to display the [CP Data 2/3] and [CP Data 3/3] screens.

3 Push the joystick left/right to select the desired file slot and then press SET.

4 Select [OK] and then press SET.
- The custom picture file already in the selected file slot will be overwritten.
- Select [Cancel] instead to cancel the operation.

5 When the confirmation message appears, press SET.

NOTES
- You cannot copy the custom picture file to a file slot that contains a protected custom picture file.
- By default, file slots [C8] and [C9] are protected.

Displaying an Index Screen of Shot Marks

After you add shot marks to an MXF clip, you can display an index screen that contains all the frames in a clip with either shot mark, only the S1 mark or only the S2 mark. When you play back a clip from this index screen, playback will start from the frame indicated by the shot mark. You can also perform other operations from this index screen, such as adding and deleting shot marks.

Operating modes: CAMERA MEDIA | MXF MXF+MP4 MP4

1 Select the desired clip (a clip with the S icon) and then press SET to open the clip menu.

2 Select [Shot Mark] and then press SET.
- The [Shot Mark] index screen appears, which contains all the frames with shot marks in the clip. Select instead [Shot Mark 1] to display an index screen only of the frames with the S1 mark or [Shot Mark 2] to display an index screen only of the frames with the S2 mark.

- The time code under the thumbnail indicates the time code of the frame with the shot mark.
- Press the INDEX button or CANCEL button to return to the MXF clip index screen.

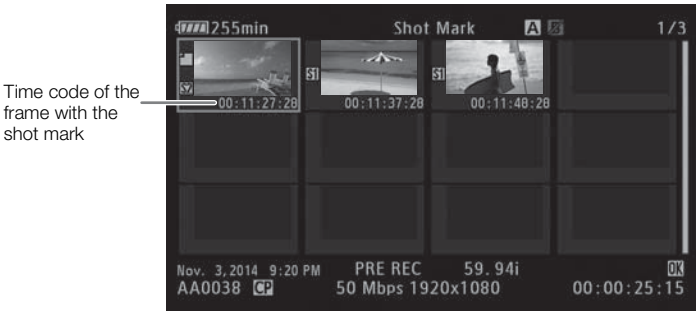

NOTES

- After you finish playing back a clip from this index screen, the index screen that was open before the [Shot Mark] index screen will appear.

Displaying a Frame Index Screen of a Single Clip

You can display an index screen of a single MXF clip broken down as frames at fixed intervals. This is useful when you have a long clip or wish to play back a clip from a certain point. You can change how many thumbnails are displayed. You can also perform other operations from this index screen, such as adding and deleting shot marks.

Operating modes: CAMERA MEDIA | MXF MXF+MP4 MP4

1 Select the desired clip and then press SET to open the clip menu.

2 Select [Expand Clip] and then press SET.

- The [Expand Clip] index screen appears, which shows thumbnails of frames taken from the clip at fixed intervals. The time code under the thumbnail indicates the time code of the frame.
- You can change the fixed interval between frames by showing more or fewer thumbnails. To show more thumbnails, open the clip menu and select [More Index Pics] and then press SET. To show fewer thumbnails, select [Fewer Index Pics] and then press SET.
- Press the INDEX button or CANCEL button to return to the MXF clip index screen.

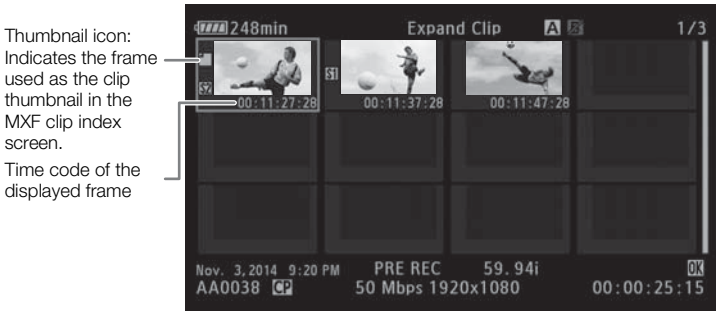

NOTES

- After you finish playing back a clip from this index screen, the index screen that was open before the [Expand Clip] index screen will appear.

Adding Shot Marks

You can add shot marks (S1, S2 or both) to shots in an MXF clip you want to set apart. Later, you can display an index screen that shows only the clips with a S1 mark, only the clips with a S2 mark, or only clips with either shot mark.

Operating modes: CAMERA | MEDIA | MXF | MXF+MP4 | MP4

Adding Shot Marks during Playback

To add an S1 mark or S2 mark to a clip during playback or playback pause, you must first set an assignable button to [Add Shot Mark 1] or [Add Shot Mark 2] in advance.

1 **Set an assignable button to [Add Shot Mark 1] or [Add Shot Mark 2] (📖 129).**

2 **During playback or playback pause, press the assignable button at the point in the clip where you want to add the shot mark.**
- A message indicating the shot mark appears on the screen and the shot mark is added to the clip.
- Adding a shot mark to a clip during playback will pause the playback.

Adding Shot Marks from the Index Screen

1 Open the [Shot Mark] index screen or [Expand Clip] index screen.

2 Select the desired frame (thumbnail) and then press SET to open the clip menu.

3 Select [Add Shot Mark 1] or [Add Shot Mark 2] and then press SET.
- The clip information screen appears and it prompts you to confirm the operation.

4 Select [OK] and then press SET.
- The screen changes back to the previous index screen and the selected shot mark appears next to the selected clip's thumbnail.
- Select [Cancel] instead to cancel the operation.

ⓘ NOTES
- You can also add S1 marks (only) using the SHOT1 button on the supplied wireless controller.
- Up to 100 shot marks (S1 and S2 marks combined) can be added to a single MXF clip.
- There may be up to a 0.5 second delay from when you press the button to when the camcorder adds the shot mark.

Deleting Shot Marks

Operating modes: CAMERA | MEDIA | MXF | MXF+MP4 | MP4

1 Open the [Shot Mark] index screen or [Expand Clip] index screen.

2 Select the desired frame (thumbnail) and then press SET to open the clip menu.

3 Select [Del. Shot Mark 1] or [Del. Shot Mark 2] and then press SET.
- The clip information screen appears and it prompts you to confirm the operation.

4 Select [OK] and then press SET.
- The selected mark is deleted and the screen changes back to the previous index screen.
- If a frame has no shot marks, it will no longer appear in the [Shot Mark] index screen.
- Select [Cancel] instead to cancel the operation.

Changing a Clip's Thumbnail

You can change the thumbnail that appears in the MXF clip index screen to one of the other frames that appear in the [Shot Mark] index screen or [Expand Clip] index screen.

Operating modes: CAMERA MEDIA | MXF MXF+MP4 MP4

1 Open the [Shot Mark] index screen or [Expand Clip] index screen.

2 Select the desired frame (thumbnail) and then press SET to open the clip menu.

3 Select [Set Index Picture] and then press SET.
- The clip information screen appears and it prompts you to confirm the operation.

4 Select [OK] and then press SET.
- The selected frame is set as the clip's thumbnail and the screen changes back to the previous index screen. appears next to the thumbnail of the selected frame.
- Select [Cancel] instead to cancel the operation.

NOTES
- When playing back a clip from the MXF clip index screen, playback will start from the beginning of the clip, regardless of the thumbnail.

Video Output Configuration

The video signal output from the 3G/HD-SDI terminal*, MON. terminal*, HDMI OUT and AV OUT terminals depends on the clip's video configuration, the capability of the external monitor (for video output from the HDMI OUT terminal) and on various menu settings.

* XF205 only.

Recording Video Signal Configuration and Video Output Configuration by Terminal

Refer to the following table for the video output configuration from each terminal, depending on the recording video configuration used.

Operating modes: CAMERA MEDIA | MXF MXF+MP4 MP4

XF205 3G/HD-SDI terminal and MON. terminal

Recording video configuration		3G/HD-SDI terminal output		MON. terminal output[1]	
Bit rate	Frame rate	[3G/HD-SDI] setting[2]		[MON.] setting[3]	
		[Direct]	[Compatible]	[HD][4]	[SD]
1920x1080	59.94P[5]	1080/59.94P	1080/59.94i	1080/59.94i	480/59.94i
	59.94i[6]	1080/59.94i			
	29.97P	1080/29.97P	1080/29.97PsF	1080/29.97PsF	
	23.98P	1080/23.98P	1080/59.94i	1080/59.94i	
1280x720	59.94P	720/59.94P	720/59.94P	720/59.94P	
	29.97P	720/29.97P			
	23.98P	720/23.98P			

[1] Onscreen displays can be superimposed and output to an external monitor (📖 165).
[2] [Video Setup] ➤ [3G/HD-SDI].
[3] [Video Setup] ➤ [MON.].
[4] The zebra pattern can be output to an external monitor (📖 89).
[5] MP4 clips only.
[6] MXF clips only.

HDMI OUT terminal and AV OUT terminal

Recording video configuration		HDMI OUT terminal output[1]			AV OUT terminal output[1] (SD output)
Bit rate	Frame rate	[MON.] setting[2]			
		[HD][3]	[SD]	[Off][4]	
1920x1080	59.94P[5]	1080/59.94P[7]	480/59.94i	1080/59.94P[7]	480/59.94i
	59.94i[6]	1080/59.94i		1080/59.94i or 480/59.94P	
	29.97P				
	23.98P				
1280x720	59.94P	720/59.94P		720/59.94P or 480/59.94P	
	29.97P				
	23.98P				

[1] Onscreen displays can be superimposed and output to an external monitor (📖 165).
[2] [Video Setup] ❯ [MON.].
[3] The zebra pattern can be output to an external monitor (📖 89).
[4] The video signal will change automatically depending on the capability of the external monitor.
[5] MP4 clips only.
[6] MXF clips only.
[7] Only when [Video Setup] ❯ [3G/HD-SDI] is set to a setting other than [Compatible] and [Video Setup] ❯ [HDMI] is set to [+1920x1080 59.94P].

Playback Video Configuration and Video Output Configuration by Terminal

Refer to the following tables for the video output configuration from each terminal, depending on the video configuration of the clip being played back.

Operating modes: CAMERA MEDIA | MXF MXF+MP4 MP4

XF205 3G/HD-SDI terminal and MON. terminal

Video configuration of the clip			3G/HD-SDI terminal output	MON. terminal output[1]	
Movie format	Bit rate	Frame rate		[MON.] setting[2]	
				[HD]	[SD]
MXF	1920x1080	59.94i / 29.97P / 23.98P	1080/59.94i	1080/59.94i	480/59.94i
	1280x720	59.94P / 29.97P / 23.98P	720/59.94P	720/59.94P	
MP4	1920x1080 / 1280x720 / 640x360	59.94P / 29.97P / 23.98P	1080/59.94P	1080/59.94i	

[1] Onscreen displays can be superimposed and output to an external monitor (📖 165).
[2] [Video Setup] ❯ [MON.].

HDMI OUT terminal and AV OUT terminal

Video configuration of the clip			HDMI OUT terminal output[1]			AV OUT terminal output[1] (SD output)
Movie format	Bit rate	Frame rate	[MON.] setting[2]			
			[HD]	[SD]	[Off][3]	
MXF	1920x1080	59.94i / 29.97P / 23.98P	1080/59.94i	480/59.94i	1080/59.94i or 480/59.94i	480/59.94i
	1280x720	59.94P / 29.97P / 23.98P	720/59.94P		720/59.94P or 480/59.94i	
MP4	1920x1080 / 1280x720 / 640x360	59.94P	1080/59.94P[4]		1080/59.94P[4] 1080/59.94i or 480/59.94i	
		29.97P / 23.98P	1080/59.94i			

[1] Onscreen displays can be superimposed and output to an external monitor (📖 165).
[2] [Video Setup] ➤ [MON.].
[3] The video signal will change automatically depending on the capability of the external monitor.
[4] Only when [Video Setup] ➤ [HDMI] is set to [+1920x1080 59.94P].

Connecting to an External Monitor

When you connect the camcorder to an external monitor for recording or playback, use the terminal on the camcorder that matches the one you wish to use on the monitor. Then, select the video signal output configuration (159). The camcorder can output video from all of the video output terminals simultaneously.

Operating modes: CAMERA MEDIA | MXF MXF+MP4 MP4

Connection Diagram

We recommend that you power the camcorder from a household power outlet using the compact power adapter.

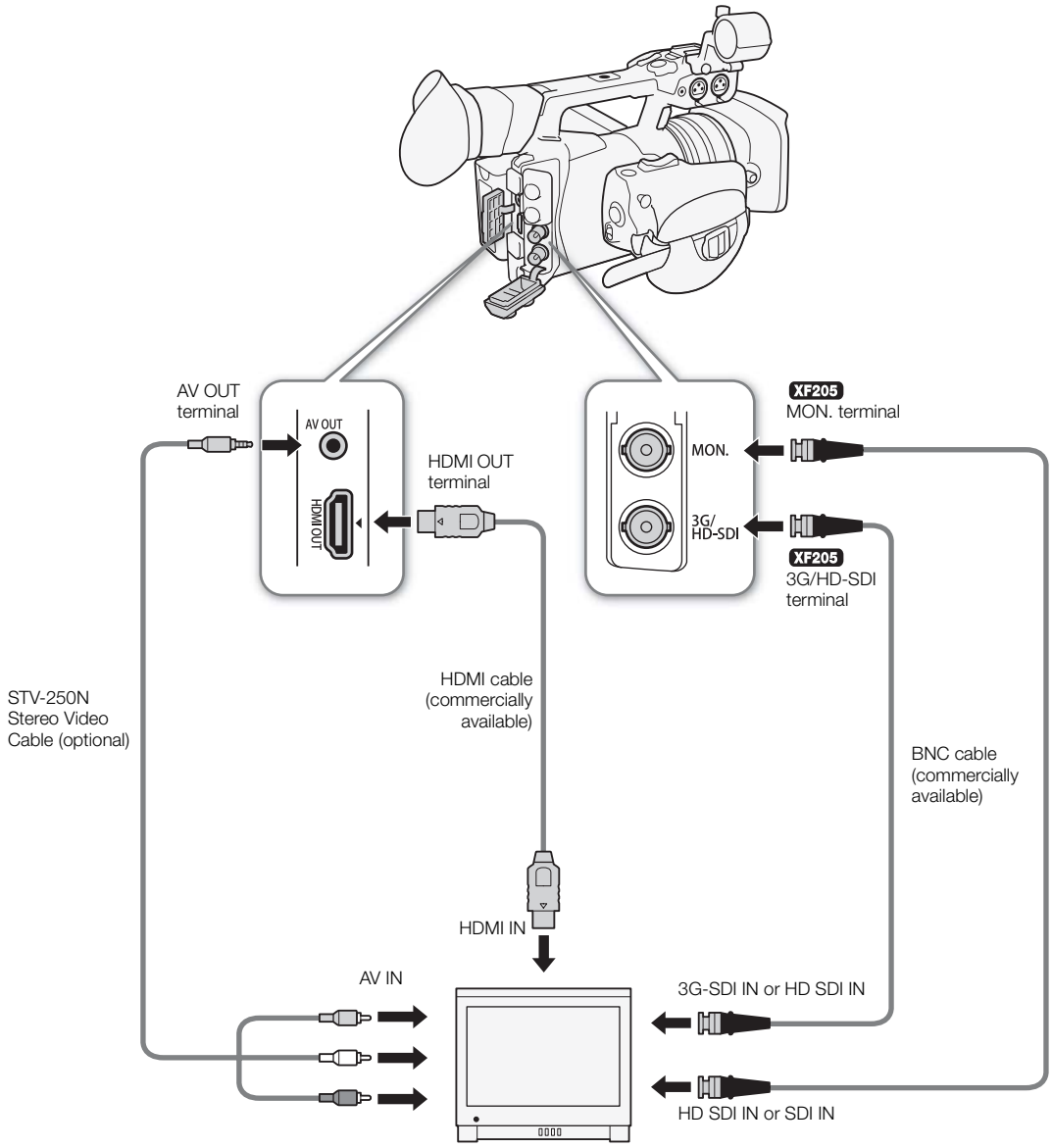

XF205 Using the 3G/HD-SDI Terminal

[Video Setup] > [3G/HD-SDI] > [Off]

The digital signal output from the 3G/HD-SDI terminal includes the video signal, audio signal (2 or 4 channels) and time code signal. If necessary, perform the following procedure to activate the terminal and select the type of signal output. Turning the output off will conserve the camcorder's power.

1 Open the [3G/HD-SDI] submenu.
[Video Setup] > [3G/HD-SDI]

2 Select the desired option and then press SET.

[Video Setup] > [3G-SDI Mapping] > [Level B]

3 To select the mapping mode for 1080/59.94P output, open the [3G-SDI Mapping] submenu.
[Video Setup] > [3G-SDI Mapping]

4 Select the desired option and then press SET.
- You can select a video output signal compliant with Level A or Level B of the SMPTE ST 425-1 standard.

Options

[Direct][1]:The video recording signal is output unchanged.

[Compatible][1]: The video signal output is compatible with most external monitors.

[On][2]:There is video output from the terminal.

[Off]:No video output from the terminal.

[1] CAMERA mode only. [2] MEDIA mode only.

NOTES

- If necessary, you can superimpose the onscreen displays on the video displayed on the external monitor (165).

XF205 Using the MON. Terminal

[Video Setup] > [MON.] > [Off]

The digital signal output from the MON. terminal also includes the video signal, audio signal (2 or 4 channels) and time code signal. If necessary, perform the following procedure to activate the terminal and change the output to HD or SD. Turning the output off will conserve the camcorder's power.

1 Open the [MON.] submenu.
[Video Setup] > [MON.]

2 Select the desired option and then press SET.
- If you selected [SD], you can select the SD output method (165).

NOTES

- If necessary, you can superimpose the onscreen displays on the video displayed on the external monitor (165).

Using the HDMI OUT Terminal

The HDMI™ OUT terminal also offers a digital connection and outputs both a video and audio signal (2 channels only).

XF205 The output of the HDMI OUT terminal depends on the [Video Setup] ➤ [3G/HD-SDI], [MON.] and [HDMI] settings. When [Video Setup] ➤ [MON.] is set to [Off], the output signal will switch automatically depending on the capability of the external monitor.

XF200 The output of the HDMI OUT terminal depends on the [Video Setup] ➤ [HDMI] setting and the capability of the external monitor.

[Video Setup]
[HDMI]
[Normal]

1 XF205 If necessary, check the settings for the 3G/HD-SDI terminal (📖 163) and MON. terminal (📖 163), as they can affect the output from the HDMI OUT terminal as well.
- To use the 1080/59.94P video output, set [Video Setup] ➤ [3G/HD-SDI] to [Direct] or [Off].
- For details, refer the video output configuration tables (📖 159).

2 Open the [HDMI] submenu.
[Video Setup] ➤ [HDMI]

3 Select [Normal] (no 1080/59.94P output) or [+1920x1080/59.94P] and then press SET.

NOTES
- The HDMI OUT terminal is for output only. Do not connect the camcorder to another device's output terminal using the HDMI OUT terminal as this will cause a malfunction.
- Correct operation cannot be guaranteed when connecting the camcorder to DVI monitors.
- Video may not be output correctly depending on the monitor. In such case, use another terminal.
- If necessary, you can superimpose the onscreen displays on the video displayed on the external monitor (📖 165).
- However, when [HDMI] is set to [+1920x1080/59.94P], onscreen displays will not be superimposed during the output of 1080/59.94P video. In CAMERA mode and in MEDIA mode during playback, only the live/playback image will be displayed on the external monitor; while the [MP4] or [Photos] index screen appears on the camcorder's screen, only the thumbnails of the clips or photos will be displayed on the external monitor.
- You can select the SD output method (📖 165).

Using the AV OUT Terminal

When you output video from the AV OUT terminal, the video signal is converted to an analog SD composite video signal. In addition, the AV OUT terminal also outputs audio. You can select the SD output method (📖 165).

NOTES
- When you play back a clip on a monitor with a 4:3 aspect ratio, the monitor will switch automatically to widescreen mode if it is compatible with the Video ID-1system.
- If necessary, you can superimpose the onscreen displays on the video displayed on the external monitor (📖 165).

SD Output

[Video Setup] ▸ [HD/SD Output] ▸ [Resize SD Output] ▸ [Letterbox]

When HD video with a 16:9 aspect ratio is converted and output from the MON. terminal*, HDMI OUT terminal or AV OUT terminal as SD video with a 4:3 aspect ratio, you can choose how it appears on the external monitor.

* XF205 only.

1 Open the [Resize SD Output] submenu.

[Video Setup] ▸ [HD/SD Output] ▸ [Resize SD Output]

2 Select the desired option and then press SET.

Options

[Letterbox]:The 16:9 aspect ratio is maintained but black letterbox bars are added to the top and bottom of the image.

[Squeeze]:The image is squeezed from the left and right so that the entire image fits within the screen. The image will appear normal if the external monitor also has a 16:9 aspect ratio.

[Side Crop]:The left and right sides of the image are cropped so that the central part of the image fits within the screen.

Original image (16:9)

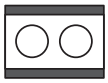
[Letterbox] setting

[Squeeze] setting

[Side Crop] setting

Superimposing Onscreen Displays to Appear on an External Monitor

[Video Setup] ▸ [HD/SD Output] ▸ [HD Onscreen Displays] [SD Onscreen Displays] ▸ [Off]

You can choose to superimpose onscreen displays on the video output from the MON. terminal*, HDMI OUT terminal or AV OUT terminal. Doing so will display the onscreen displays on an external monitor. You can set this function separately for HD and SD output. This setting will not affect your recordings.

* XF205 only.

1 Open the [HD Onscreen Displays] or [SD Onscreen Displays] submenu.

[Video Setup] ▸ [HD/SD Output] ▸ [HD Onscreen Displays] or [SD Onscreen Displays]

2 Select [On] and then press SET.

- If [OLED/VF Setup] ▸ [Custom Display 2] ▸ [Output Display] is set to [On], DISP appears on the upper right of the screen.

NOTES

- Onscreen displays will not appear on an external monitor for SD output if [Video Setup] ▸ [HD/SD Output] ▸ [Resize SD Output] is set to [Side Crop].
- If you set an assignable button to [Onscreen Display] (129), you can press the button to turn on and off the superimposing of onscreen displays on video output from the camcorder's terminals (simultaneously for HD and SD video).

Audio Output

The camcorder can output audio from the 3G/HD-SDI terminal*, MON. terminal*, HDMI OUT terminal, AV OUT terminal or 🎧 (headphone) terminal. When audio is output from the AV OUT terminal or 🎧 (headphone) terminal, you can configure settings such as the output channel. When audio is output from the AV OUT terminal, you can select the output level. Additionally, during playback of MXF clips recorded with 4-channel audio, you can select the channels output from the HDMI OUT terminal.

* XF205 only.

Selecting the Audio Channel

You can select the audio channels that are output from the various terminals.

Audio Output from the AV OUT Terminal or 🎧 (headphone) Terminal

Operating modes: CAMERA MEDIA | MXF MXF+MP4 MP4

1 Open the [Monitor Channels] submenu.

[♪)) Audio Setup] ➤ [Audio Output] ➤ [Monitor Channels]

2 Select the desired option and then press SET.

- The icon of the selected channels will appear on the right of the screen, above the audio level meter.

[♪)) Audio Setup]
[Audio Output]
[Monitor Channels]
[CH1/CH2]

NOTES

- If you set an assignable button to [Monitor Channels] (📖 129), you can press the button to cycle through the audio channel options.

Audio Output from the HDMI OUT Terminal

During 2-channel audio recording, the audio channels output from the HDMI OUT terminal are [CH1/CH2] and cannot be changed. During the recording/playback of MXF clips with 4 audio channels, you can select which two channels to output from the HDMI OUT terminal.

Operating modes: CAMERA MEDIA | MXF MXF+MP4 MP4

1 Open the [HDMI Channels] submenu.

[♪)) Audio Setup] ➤ [Audio Output] ➤ [HDMI Channels]

2 Select the desired option and then press SET.

[♪)) Audio Setup]
[Audio Output]
[HDMI Channels]
[CH1/CH2]

Options

Setting	Audio output	
	L	R
[CH1/CH2]	CH1	CH2
[CH1/CH1]	CH1	CH1
[CH2/CH2]	CH2	CH2
[CH1+2/CH1+2]	CH1+CH2 mixed	CH1+CH2 mixed
[CH3/CH4]*	CH3	CH4
[CH3/CH3]*	CH3	CH3
[CH4/CH4]*	CH4	CH4

Setting	Audio output	
	L	R
[CH3+4/CH3+4]*	CH3+CH4 mixed	CH3+CH4 mixed
[CH1+3/CH2+4]*	CH1+CH3 mixed	CH2+CH4 mixed

* Only available during the recording/playback of MXF clips with 4 audio channels.

Synchronizing the Video with the Audio being Monitored

[♪)) Audio Setup] ▽ [Audio Output] ▽ [Monitor Delay] ▽ [Normal]

When audio is output from the AV OUT terminal or 🎧 (headphone) terminal, you can choose to synchronize the audio signal with the video signal or have the camcorder output the audio in real time.

Operating modes: CAMERA MEDIA | MXF MXF+MP4 MP4

1 Open the [Monitor Delay] submenu.
[♪)) Audio Setup] ➤ [Audio Output] ➤ [Monitor Delay]

2 Select the desired option and then press SET.

Options

[Line Out]:Synchronizes the audio and video signals.

[Normal]:Allows you to monitor the audio in real time. There will be a slight delay between the audio and video.

ⓘ NOTES

- The audio and video signals recorded will be synchronized, regardless of the [Monitor Delay] setting.

Selecting the Output Level of the AV OUT Terminal

[♪)) Audio Setup] ▽ [Audio Output] ▽ [Level] ▽ [1 Vrms]

You can select the output level of audio that is output from the AV OUT terminal.

Operating modes: CAMERA MEDIA | MXF MXF+MP4 MP4

1 Open the audio ouput [Level] submenu.
[♪)) Audio Setup] ➤ [Audio Output] ➤ [Level]

2 Select the desired level and then press SET.

Options

[1 Vrms]:The audio output level is normal.

[2 Vrms]:The audio output level is 6 dB higher.

ⓘ NOTES

- This setting does not affect audio output to headphones.

Saving Clips to a Computer

The software used to save your clips on a computer depends on the movie format of the clips. Use **Canon XF Utility** to save MXF clips or one of the Canon XF plugins* to import MXF clips into a non-linear editing (NLE) software. Use the supplied software **Data Import Utility** to save MP4 clips.

* Plugins are available for NLE software by Avid and Apple.

Saving MXF Clips

Canon XF Utility and the Canon XF plugins are available for free download from your local Canon Web site. Refer to the Web site for the system requirements and the latest information about the software and plugins.

Canon XF Utility: Browser for transferring clips to a computer, playing back and checking video, and managing clips.

Plugins for non-linear editing (NLE) software: The plugins allow you to transfer clips from a computer or a CF card (connected via USB reader to a computer) to the NLE software. The following plugins are available.
- Canon XF Plugin 64 for Avid Media Access (Windows or Mac OS)
- Canon XF Plugin for Final Cut Pro/Final Cut Pro X (Mac OS)

For details about using the software, refer to the instruction manual (PDF file) that is installed with the software/plugin. Refer to *Viewing the Software Instruction Manuals* (📖 170) for details on accessing the manuals.
The following procedures for Windows systems are written based on a computer running Windows 7. The procedure may be different for other versions. For details see the Help modules of the operating system.

Operating modes: CAMERA | MEDIA | MXF | MXF+MP4 | MP4

Installing Canon XF Utility (Windows)

1 Double-click the file that you downloaded from the Canon Web site to decompress it.
- The file is **xuw*****.zip** for Canon XF Utility or **xpmw*****.zip** for Canon XF Plugin 64 for Avid Media Access. The rest of the explanation refers only to Canon XF Utility but the procedure is similar for the Canon XF plugin.
- The folder **xuw******* will be created that contains the file **xuw***.exe**.

2 Double-click **xuw***.exe**.

3 Follow the onscreen instructions to select your area (continent), country/region and/or language, as necessary.
- Available options will vary depending on your country/region.

4 After the message appears prompting you to exit other applications, exit other applications and then click **OK**.
- The software's license agreement appears.

5 Read the license agreement and click **Yes** to begin the installation.
- If you do not select **Yes**, you cannot install the software.
- When the installation has completed, **Installation has completed successfully** appears.

6 Click **Next** and then click **Finish**.

Uninstalling Canon XF Utility (Windows)

1 From the **Start** menu, select **All Programs** > **Canon Utilities** > **Canon XF Utility** > **Uninstall Canon XF Utility**.
- A confirmation screen appears.

2 Click **Yes** to begin uninstalling the software.
- When the software has been uninstalled, **The software has been successfully uninstalled** appears.

3 Click **OK**.

Uninstalling Canon XF Plugin 64 for Avid Media Access and Canon XF MPEG2 Decoder (Windows)

1 In the Control Panel, open **Programs and Features** or **Add or Remove Programs**.
- A list of installed programs appears.

2 Select the plugin/decoder you wish to uninstall.

3 Click **Uninstall** or **Uninstall/Change** and follow the instructions to uninstall the plugin/decoder.

Uninstalling the Canon XF Plugin 64 for Avid Media Access Instructions

1 From the **Start** menu, open **All Programs** > **Canon Utilities** > **Canon XF Plugin 64 for Avid Media Access** > **Uninstall Canon XF Plugin 64 for Avid Media Access Instruction Manual**.

2 When the confirmation screen appears, click **Yes** and then click **OK**.

Installing Canon XF Utility (Mac OS)

1 Double-click the file that you downloaded from the Canon Web site to decompress it.
- The downloaded file is **xum*****.dmg.gz** for Canon XF Utility, **xpmm*****.dmg.gz** for Canon XF Plugin for Avid Media Access, or **xpfm*****.dmg.gz** for Canon XF Plugin for Final Cut Pro/Final Cut Pro X. The rest of the explanation refers only to Canon XF Utility but the procedure is similar for the Canon XF plugins.
- The file **xum*****.dmg** will be created.

2 Double-click **xum*****.dmg**.
- The **xum***** icon will appear on the desktop.

3 Double-click **xum***** and then double-click **XUMInstaller**.

4 Follow the onscreen instructions to select your area (continent), country/region and/or language, as necessary.
- Available options will vary depending on your country/region.

5 After the message appears prompting you to exit other applications, exit other applications and then click **OK**.
- The software's license agreement appears.

6 Read the license agreement and click **Yes** to begin the installation.
- If you do not select **Yes**, you cannot install the software.
- When the installation has completed, **Installation has completed successfully** appears.

7 Click **Next** and then click **Finish**.

Uninstalling the Software (Mac OS)

Drag and drop to **Trash** the file or folder corresponding to the item you wish to uninstall.

Software/Plugin/Manual	File/Folder
Canon XF Utility	/Applications/Canon Utilities/Canon XF Utility
Canon XF Plugin for Final Cut Pro	/Library/Application Support/ProApps/MIO/RAD/Plugins/CanonXF.RADPlug
Canon XF Plugin for Final Cut Pro X	/Library/Application Support/ProApps/MIO/RADPlugins/CanonXF64.RADPlug
Canon XF Plugin 64 for Avid Media Access	/Library/Application Support/ProApps/Avid/AVX2_Plug-ins/AMA/MVP_CanonXF64.avx
Canon XF MPEG2 Decoder	/Library/QuickTime/XFMpeg2Dec.component
Canon XF Plugin Instructions	/Applications/Canon Utilities/*Desired plugin name*

Viewing the Software Instruction Manuals

For details on using the software, refer to the instruction manual (PDF file) of each module. The instruction manuals are installed with the software. You can also view the instruction manual by starting the **Canon XF Utility** software and then selecting **Help** > **View Instruction Manual**.

Viewing the Canon XF Utility Instruction Manual
Windows:

1 From the **Start** menu, select **All Programs** > **Canon Utilities** > **Canon XF Utility** > **Canon XF Utility Instruction Manual**.

2 Select the language of the instruction manual to view.

Mac OS:

1 From **Applications**, open **Canon Utilities** > **Canon XF Utility** > **Manual**.

2 Open the folder of the desired language and double-click the PDF file.

Viewing the Plugin Instructions
Windows:

1 From the **Start** menu, select **All Programs** > **Canon Utilities** > **Canon XF Plugin 64 for Avid Media Access** > **Canon XF Plugin 64 for Avid Media Access Instruction Manual**.

2 Select the desired language.

Mac OS:

1 From **Applications**, open **Canon Utilities** > *Desired plugin name* > **Manual**.

2 Open the folder of the desired language and double-click the PDF file.

Saving MP4 Clips

Using the supplied software **Data Import Utility**, you can save MP4 clips to a computer. **Data Import Utility** will also automatically join multiple MP4 clips of a single scene that were split every 4 GB because of file size limits and save them as a single video file.
For more details, refer to ‘Data Import Utility Software Guide’, a PDF file in the [\Manual\English] folder of the supplied software CD-ROM.

IMPORTANT

- Before saving MP4 clips to your computer with **Data Import Utility** using an SD card reader or your computer’s memory card slot, do not access or manipulate the files on the SD card with other software. Failing to do so may result in not being able to save the files to your computer.

Installing Data Import Utility

See *Installation* and *System requirements* in the ‘Data Import Utility Software Guide’ Software Guide (PDF file) for step-by-step installation instructions and system requirements.

Connecting the Camcorder to a Computer

Connect the camcorder to a computer using the optional IFC-400PCU USB cable. Use the appropriate software as described in the previous sections to save your recordings.

Operating modes: CAMERA | MEDIA | MXF | MXF+MP4 | MP4

1 Power the camcorder using the compact power adapter.

2 On the camcorder, hold down the button on the POWER switch and slide the switch to MEDIA.

3 Connect the camcorder to the computer using the optional IFC-400PCU USB cable.

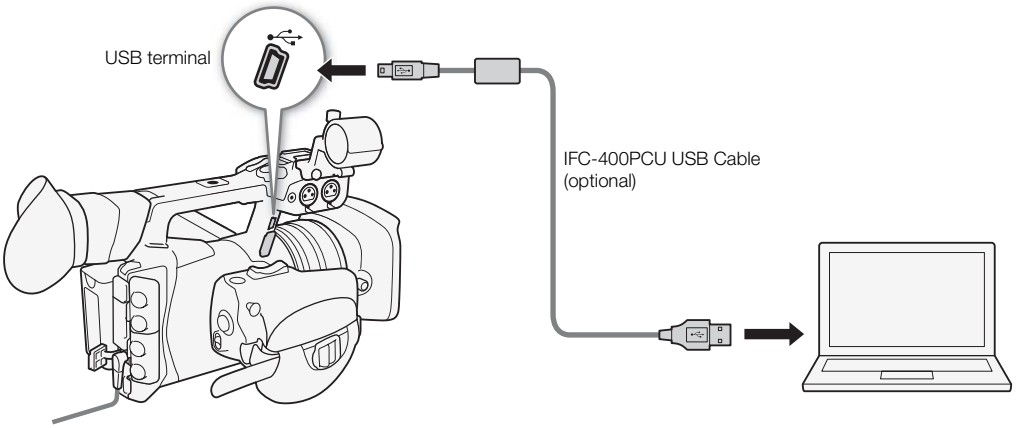

About the Network Functions

After you connect the camcorder to a network via Wi-Fi (📖 174) or wired LAN (📖 179), you can use the following network functions. You can save up to 5 network configurations and switch easily between them depending on your working environment. You can check the current network settings on the status screens (📖 215) and change them if necessary (📖 181).

Network functions and connection types

Network function	Description	Wired LAN	Wi-Fi		📖
			Infrastructure[1]	Camera Access Point[2]	
Browser Remote	Control the camcorder remotely from the Web browser of a connected device.	●	–	●	182
Real-Time Proxy Transfer	Send a proxy video file from the camcorder to a connected device to save locally on the device.	–	–	●	188
FTP File Transfer	Transfer clips recorded with the camcorder to another device connected to the network using the FTP protocol.	●	●	●	189
Playback via Browser	Access the MP4 clips or photos recorded on the SD card in the camcorder from the Web browser of a connected device to play back or save locally.	●	–	●	193

[1] Connection to a Wi-Fi network via an external access point (wireless router, etc.)
[2] Direct connection to one Wi-Fi-enabled device where the camcorder serves as the Wi-Fi access point.

Before using the network functions

- The instructions in this chapter assume you already have a correctly configured and working network, network device(s) and/or Wi-Fi access point. If necessary, refer to the documentation provided with the network devices you want to use.
- Configuring the network settings requires adequate knowledge about configuring and using wired (Ethernet) and/or wireless (Wi-Fi) networks. Canon cannot provide support regarding network configurations.

IMPORTANT

- Canon shall not be liable for any loss of data or damage resulting from incorrect network configuration or settings. Additionally, Canon shall not be liable for any loss or damage caused by the use of network functions.
- Using an unprotected Wi-Fi network can expose your files and data to monitoring by unauthorized third parties. Be aware of the risks involved.

NOTES

- **About the Wi-Fi antenna**: When using the camcorder's Wi-Fi functions, do not cover the Wi-Fi antenna with your hand or other object. Covering it may interfere with wireless signals.
- Do not open either of the CF card slot covers or the SD card slot cover while using network functions.

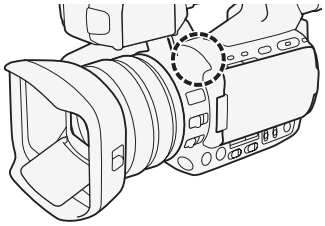

Connecting to a Wi-Fi Network

The camcorder is Wi-Fi certified and can connect to a Wi-Fi network using an external access point (wireless router) or can itself serve as a Wi-Fi access point. The camcorder can connect to wireless routers (access points) compliant with the 802.11a/b/g/n protocol and are Wi-Fi certified (bear the logo shown on the right).

The camcorder offers 5 ways to connect to a Wi-Fi network and the method you use will depend on the type and specifications of the access point and network you want to use. Note that using an unprotected Wi-Fi network can expose your data to monitoring by unauthorized third parties. Be aware of the risks involved.

Operating modes: CAMERA MEDIA | MXF MXF+MP4 MP4

WPS (button): If your wireless router supports Wi-Fi Protected Setup (WPS), setup will be easy and require minimal configuring and no passwords. To check if your wireless router has a WPS button and for details about how to activate the Wi-Fi protected setup, refer to the instruction manual of your wireless router.

WPS (PIN code): Even if your wireless router does not have a dedicated WPS button, it may support WPS using a PIN code instead. For setup using a PIN code, you will need to know in advance how to activate the wireless router's WPS function. For details refer to the instruction manual of your wireless router.

Searching for Access Points: If your access point does not support the WPS function or you cannot activate it, you can have the camcorder search for access points in the area.

Manual Setup: If the access point you want to use has stealth mode activated and it cannot be automatically detected by the camcorder, you can enter all the necessary settings manually. This requires more advanced knowledge of Wi-Fi and network settings.

Camera Access Point: When shooting in a location where there are no access points available, the camcorder can serve as a wireless access point*. Wi-Fi enabled devices will be able to connect to the camcorder directly.

* Limited only to the connection between the camcorder and supported Wi-Fi enabled devices. The functionality is not the same as that of commercially available access points.

Wi-Fi Protected Setup (WPS)

Wi-Fi Protected Setup (WPS) is the easiest way to connect to a Wi-Fi access point. You can do simply by pushing a button (if the access point (wireless router) you want to connect to has a WPS button) or using a PIN code issued by the camcorder.

Wireless Routers with a WPS Button

1 Open the [Set Up New] submenu.

[Other Functions] ➤ [Network Settings] ➤ [Connection Settings] ➤ [Set Up New]

2 Select the [WPS: Button] method.

[Wi-Fi] ➤ [Infrastructure] ➤ [WPS: Button]

3 Press and hold the WPS button on the wireless router.

- The length of time required to hold down the WPS button depends on the wireless router. Refer to the instruction manual of your wireless router and make sure the wireless router's WPS function is activated.

[Other Functions]

[Network Settings]

[Connection Settings]

[Set Up New]

4 Within 2 minutes, press SET on the camcorder.
- While [Connecting] appears on the screen, you can press SET or the CANCEL button to cancel the operation.
- After the connection is correctly established, continue with the procedure to configure the IP address assignment (178).

NOTES
- The [WPS: Button] method may not work correctly if there are several active access points in the area. In such case try using [WPS: PIN Code] or [Search for Access Points] (175) instead.

WPS using a PIN code

1 Open the [Set Up New] submenu.
[Other Functions] [Network Settings] [Connection Settings] [Set Up New]

2 Select the [WPS: PIN Code] method.
[Wi-Fi] [Infrastructure] [WPS: PIN Code]
- The camcorder will generate and display an 8-digit PIN code.

3 Enter the PIN code from step 2 into the wireless router's WPS (PIN code) setup screen.
- For most wireless routers, you must use a Web browser to access the setup screen.
- For details about how to access your wireless router's settings and activate the Wi-Fi Protected Setup (WPS) using a PIN code, refer to the instruction manual of your wireless router.

4 Within 2 minutes, press SET on the camcorder.
- While [Connecting] appears on the screen, you can press SET or the CANCEL button to cancel the operation.
- After the connection is correctly established, continue with the procedure to configure the IP address assignment (178).

Searching for Access Points

The camcorder will automatically detect access points in the vicinity. After you select the desired access point, you only need to enter the selected network's encryption key (password) to connect the camcorder.

1 Open the [Set Up New] submenu.
[Other Functions] [Network Settings] [Connection Settings] [Set Up New]

2 Select the [Search for Access Points] method.
[Wi-Fi] [Infrastructure] [Search for Access Points]
- The camcorder will search for active access points in your area and display a list of available options.

[Other Functions]
[Network Settings]
[Connection Settings]
[Set Up New]

3 Push the joystick up/down to select the desired access point and then press SET.

- If the access point is encrypted (🔒), enter the encryption key (password) with the following procedure. Otherwise, continue with the procedure to configure the IP address assignment (📖 178).

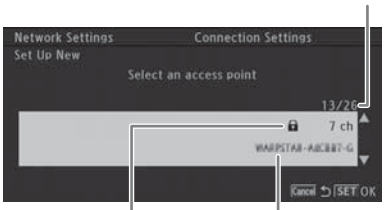

Encrypted Access Points

1 If necessary, select the WEP index key.

- This step is only necessary if the Wi-Fi network's authentication method is set to [Shared Key] or if the encryption method is set to [WEP].

2 To enter the [Encryption Key] (password), select [Input] and then press SET.

- Enter the password of the selected Wi-Fi network using the keyboard screen (📖 176).

3 Continue with the procedure to configure the IP address assignment (📖 178).

ⓘ NOTES

Valid encryption keys vary depending on the encryption method.

64-bit WEP encryption: 5 ASCII characters or 10 hexadecimal characters.

128-bit WEP encryption: 13 ASCII characters or 26 hexadecimal characters.

AES / TKIP encryption: 8 to 63 ASCII characters or 64 hexadecimal characters.

* Note: ASCII characters include the numbers 0 to 9, the letters a to z and A to Z and some punctuation marks and special symbols. Hexadecimal characters comprise the numbers 0 to 9 and the letters a to f and A to F.

Using the Virtual Keyboard Screen

The virtual keyboard is displayed on the OLED screen.

1 Use the joystick to select a character and then press SET to add it.

- If you are entering sensitive information, like a password, the character you entered will change to "◆" after a moment to protect the password.
- Use the arrows (⬆/⬇/⬅/➡) to change the position of the cursor and the backspace character (⌫) to delete the last character entered.
- Repeat this step as necessary to enter the desired text.

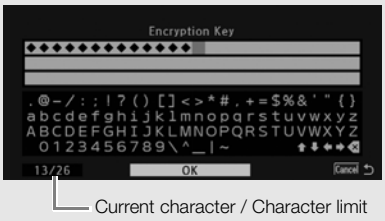

2 After entering the desired text, select [OK] and then press SET to close the keyboard screen.

3 Back in the original screen, select [OK] and then press SET to confirm the text and continue.

Manual Setup

If you prefer, you can enter manually the details of the Wi-Fi network you want to connect to. Follow the instructions on the screen to complete the procedure.

[Other Functions] ▸ [Network Settings] ▸ [Connection Settings] ▸ [Set Up New]

1 Open the [Set Up New] submenu.

[Other Functions] ▸ [Network Settings] ▸ [Connection Settings] ▸ [Set Up New]

2 Select the [Manual] method.

[Wi-Fi] ▸ [Infrastructure] ▸ [Manual]

3 To enter the [SSID] (network name), select [Input] and then press SET.

- Enter the SSID (network name) of the selected Wi-Fi network using the keyboard screen (176).

4 Select the Wi-Fi network's authentication method and then press SET.

- If you selected [Shared Key], skip to step 6.

5 Select the Wi-Fi network's encryption method and then press SET.

- If the authentication method is [Open], you can select [WEP] and continue to step 6, or [No encryption] and skip to step 7.
- If the authentication method is [WPA-PSK] or [WPA2-PSK], you can select [TKIP] or [AES].

6 Enter the encryption key as described in *Encrypted Access Points* (176).

7 Continue with the procedure to configure the IP address assignment (178).

Camera Access Point

In this mode the camcorder itself serves as a wireless access point to which other Wi-Fi-enabled devices can connect. Follow the instructions on the screen to complete the procedure.

[Other Functions] ▸ [Network Settings] ▸ [Connection Settings] ▸ [Set Up New]

1 Open the [Set Up New] submenu.

[Other Functions] ▸ [Network Settings] ▸ [Connection Settings] ▸ [Set Up New]

2 Select the [Camera Access Point] method.

[Wi-Fi] ▸ [Camera Access Point]

3 To enter the [SSID] (network name), select [Input] and then press SET.

- Enter the SSID (network name) the camcorder will use as a Wi-Fi access point using the keyboard screen (176).
- The network name is needed to connect the network device to the camcorder. If necessary, write it down.

4 Select the wireless connection mode (5 GHz band or 2.4 GHz band) and then press SET.

5 Select the channel and then press SET.

- Available channels will be different depending on the wireless connection mode selected in the previous step.

6 Select the encryption method and then press SET.

- If you selected [Open/No encryption], skip to step 8. If you selected [WPA2-PSK/AES], continue with step 7.

7 Enter the encryption key as described in *Encrypted Access Points* (176).

- This encryption key (password) is needed to connect the network device to the camcorder. If necessary, write it down.

8 Continue with the procedure to configure the IP address assignment (📖 178).

Configuring the IP Address Settings

At this point you need to configure the TCP/IP settings for the camcorder to be able to connect to a wired or Wi-Fi network. If you need to configure the TCP/IP settings manually, consult the network administrator to obtain the relevant information.

1 Select the method for assigning the IP address: Select [Automatic] or [Manual] and then press SET.
- If you selected [Automatic], IP settings will be assigned automatically. Continue with the procedure to review and save the configuration (📖 178).

2 If you selected [Manual], enter manually the IP address assigned to the camcorder.
- Push the joystick up/down to select a value for the first field and then press SET to move to the next field. After completing the four fields of an address, select [Set] and then press SET to confirm the address.

3 Enter the [Subnet Mask] and [Default Gateway] addresses in the same way.
- For Camera Access Point connections, the rest of the procedure is not necessary. Continue with the procedure to review and save the configuration (📖 178).

4 Select the method for setting up the DNS server: Select [Do not use DNS] or [Manual].
- If you selected [Do not use DNS], a DNS server will not be used. Continue with the procedure to review and save the configuration (📖 178).

5 If you selected [Manual], enter the [Primary DNS Server] and [Secondary DNS Server] using the method described in step 2.
- After entering the secondary DNS server, continue with the procedure to review and save the configuration (📖 178).

Saving the Configuration

1 Review the access point's configuration and then press SET.
- The first screen shows the access point's SSID and the type of connection. Push the joystick up/down to review additional settings before pressing SET.

2 Select the desired configuration number and then press SET.
- You can save up to 5 different network configuration profiles in the camcorder. If you select a configuration number that was already in use, the previous configuration will be overwritten by the new one.

3 To change the [Network Configuration Name], select [Input] and then press SET.
- If you wish, you can give the network configuration profile a more descriptive name to make it easier to identify. Enter the desired name using the keyboard screen (📖 176).

4 Select [OK] and then press SET to save the network configuration.

5 When the confirmation screen appears, press SET.

Connecting to a Wired (Ethernet) Network

Connect the camcorder to a router or other device connected to a wired (Ethernet) network using a commercially available LAN cable. Use Category 5e, shielded twisted pair (STP) LAN cables compatible with Gigabit Ethernet (1000BASE-T) with good shielding capability.

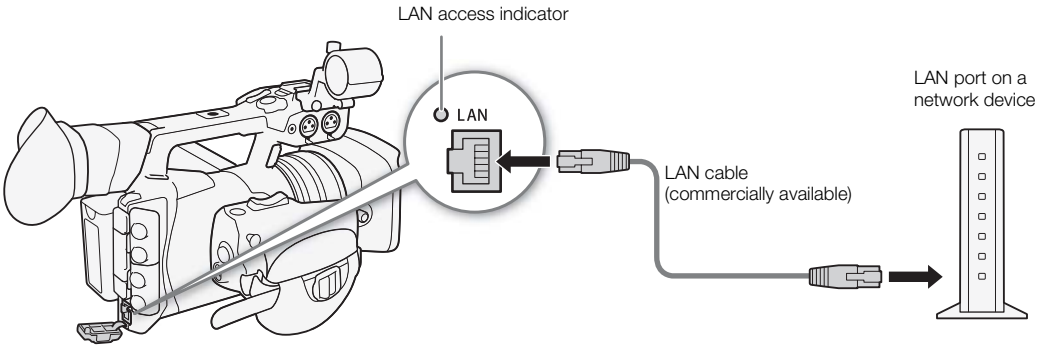

1 Connect a commercially available LAN cable to the LAN terminal on the camcorder and a LAN port on a network device.

2 Open the [Set Up New] submenu.

[Other Functions] ➤ [Network Settings] ➤ [Connection Settings] ➤ [Set Up New]

3 Select [Ethernet] and then press SET.

- Continue with the procedure to configure the IP address assignment (178).

[Other Functions]

[Network Settings]

[Connection Settings]

[Set Up New]

Selecting a Network Connection

You can save up to 5 different network configuration profiles. You can select which one to use depending on where you plan to use the camcorder. If you just saved a new network configuration (📖 178), that network configuration will already be automatically selected and this procedure is not required.

1 Open the [Select] submenu.

[🔧 Other Functions] ➤ [Network Settings] ➤ [Connection Settings] ➤ [Select]

2 Select the desired configuration number and then press SET.

- The camcorder will connect to the selected network only when you activate a network function. The icon displayed on the top left of the screen will indicate the type of network selected and the connection status. Refer to the following table.

[🔧 Other Functions]
▽
[Network Settings]
▽
[Connection Settings]
▽
[Select]

Connection type	Onscreen display	Connection status
Wi-Fi (Infrastructure)		In yellow: The camcorder is connecting to or disconnecting from the network. In white: The network function can be used.
Wi-Fi (Camera Access Point)	AP	In yellow: Starting the camcorder's access point. In white: The camcorder's access point is ready. Connect the Wi-Fi enabled device to the camcorder. • On the device: Open the Wi-Fi settings screen and select the network name (SSID) that was set in the camcorder. If necessary, enter the password set in the camcorder (📖 177).
LAN (Ethernet)		In yellow: The camcorder is connecting to or disconnecting from the network. The LAN access indicator will flash as well. In white: The network function can be used. The LAN access indicator will illuminate as well. • If you set [🔧 Other Functions] ➤ [LAN (Ethernet) LED] to [Off], the LAN access indicator will not illuminate.

Connection type

Changing Network Settings

You can edit the settings of the currently selected network configuration profile even after the initial setup. Changing settings manually requires more advanced knowledge of Wi-Fi and network settings. Turn off any active network functions and wait until the network icons disappear from the screen before starting the procedure.

1 Select the network configuration profile whose settings you want to change (📖 180).

2 Open the [Edit] submenu.

[Other Functions] ➤ [Network Settings] ➤ [Connection Settings] ➤ [Edit]

[Other Functions]
[Network Settings]
[Connection Settings]
[Edit]

3 Continue with one of the following procedures depending on the settings you wish to change.

Changing Network Settings

4 Select [Settings] and then press SET.

5 If in step 1 you selected a Wi-Fi connection, select [Infrastructure] or [Camera Access Point].

- Continue the procedure as described in *Manual Setup* (📖 177, from step 3) or *Camera Access Point* (📖 177, from step 3).

If in step 1 you selected a LAN connection, select [Automatic] or [Manual] and then press SET.

- If you selected [Automatic], IP settings will be assigned automatically and no further settings are necessary. Select [OK] and then press SET twice to save the configuration.
- If you selected [Manual], continue the procedure as described in *Manual Setup* (📖 177, from step 3).

Renaming the Configuration Profile

Each network configuration profile is stored under a configuration number ([No. 1] to [No. 5]). You can rename it with a more familiar name to make it easier to distinguish between various networks you use.

4 Select [Rename] and then press SET.

5 To enter the new [Network Configuration Name], select [Input] and then press SET.

- Enter the desired network configuration name using the keyboard screen (📖 176).

Browser Remote: Controlling the Camcorder from a Network Device

After connecting the camcorder to a network (Wi-Fi or using the LAN terminal), you can control the camcorder remotely from the Web browser of a connected network device* using the Browser Remote application. Browser Remote lets you monitor the image through live view, start and stop recording and remotely control the shutter speed, gain and other settings. You can also create, edit and transfer a metadata profile** and check the recording media, remaining recording time, time code, etc.

* For details about compatible devices, operating systems, Web browsers, etc., please visit your local Canon Web site.
**MXF clips only.

Operating modes: CAMERA MEDIA | MXF MXF+MP4 MP4

Setting Up Browser Remote

Camcorder Settings

You can set a unique camcorder identification code and designate the port that the Browser Remote application should use when accessing the camcorder through network. The port number (HTTP protocol) used by Browser Remote is usually set to port 80, but you can change it if necessary. The camcorder ID will appear on the Browser Remote screen, making it easy to identify which camcorder the application is controlling in case of a multi-camera shooting setup.

1 Open the [Camera Settings] submenu.

[Other Functions] ➤ [Network Settings] ➤ [Remote Settings] ➤ [Camera Settings]

2 Push the joystick up/down to select a value for the first digit of the port number and then press SET to move to the next digit.

3 After completing all the digits, select [Set] and then press SET to confirm the port number.

4 To enter the [Camera ID], select [Input] and then press SET.

- Enter the desired camcorder ID using the keyboard screen (176).

5 Select [OK] and then press SET to save the network configuration.

6 When the confirmation message appears, press SET.

[Other Functions]
[Network Settings]
[Remote Settings]
[Camera Settings]

User Settings

A user name and password are required before the Browser Remote application can access and operate the camcorder. You can set up to three different users and select whether you want to allow single-user operation (full control) or two-user operation (one controlling camcorder functions and another in charge of metadata input for MXF clips).

[Full Control User]	Can access all 3 Browser Remote screens: [Advanced Control], [Basic Control] and [Metadata Input].
[Camera Control User]	Can access only the [Advanced Control] screen. This would be the main operator controlling the camcorder.
[Meta Control User]	Can access only the [Metadata Input] screen. This would be the person in charge of keeping the MXF clip information up to date.

1 Open the [Users Settings] submenu.

[Other Functions] [Network Settings] [Remote Settings] [Users Settings]

[Other Functions]
[Network Settings]
[Remote Settings]
[Users Settings]

2 To enter the [User Name] for the [Full Control User], select [Input] and then press SET.
- Enter the desired user name using the keyboard screen (176).

3 Enter the [Password] for the [Full Control User] in the same way.

4 Repeat steps 2 and 3 to enter the user names and passwords for the [Camera Control User] and [Meta Control User].

5 Select [OK] and then press SET to save the network configuration. When the confirmation screen appears, press SET.

6 Back in the [Remote Settings] submenu, select [Select User] and then press SET.

7 Select [One User (Full Control)] or [Two Users (Camera/Meta)] and then press SET.

8 Select [OK] and then press SET to save the network configuration. When the confirmation screen appears, press SET.

Starting Browser Remote

After connecting the camcorder to the network, you can start the Browser Remote application on the Web browser* of any network device connected to the same network. You can check the Browser Remote settings on the status screens (216).

* A Web browser that supports JavaScript and is enabled to accept cookies is required.

Preparations on the camcorder

Operating modes: CAMERA MEDIA | MXF MXF+MP4 MP4

[Other Functions]
[Network Functions]
[Off]

1 Connect the camcorder to the desired network (180).
- Select a Camera Access Point connection or a wired network connection.

2 To activate Browser Remote on the camcorder, open the [Network Functions] submenu.

[Other Functions] [Network Functions]

3 Select [Browser Remote] and then press SET.
- Remote will appear on the top of the screen, next to the connection type icon. When the icons turn white, the camcorder is ready to accept commands from the Browser Remote application.
- With Camera Access Point connections, you need to actively connect the Wi-Fi enabled device to the camcorder.

4 Check the camcorder's IP address on the status screen.
- Set an assignable button to [Status] in advance (129). Press the assignable button to open the status screens and push the joystick up/down to select the [Network Settings 4/10] status screen.
- Check the IP address assigned to the camcorder ([IP Address]) and, if necessary, write it down.
- Press the assignable button set to [Status] again to close the status screens

On the connected network device

1 Start the Web browser on the network device.

2 Enter the camcorder's URL.

- Enter the IP address you checked previously into the Web browser's address bar, adding the prefix "http://".
- If the you chose a port other than the default port [80], you can specify it by adding ":nnn" at the end of the URL. For example "http://192.168.0.80:095".

Camcorder's IP address from the status screen

3 Enter the user name and password.

- Be sure to log in with the user name and password of one of the users that were set on the camcorder (📖 182). If necessary, consult the administrator who configured the camcorder's settings.
- The Browser Remote screen will appear. The screen displayed will differ depending on the user information used to log in.
- While Browser Remote is correctly connected to the camcorder, the ●●●● above the time code will turn on one by one and then turn off in an endless loop.
- The camcorder's ID will appear on the Browser Remote screen while live view is not activated. In the [Metadata Input] screen, it appears at the bottom of the screen.

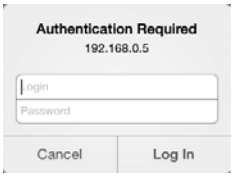

Example of the login screen. The screen may differ depending on the Web browser and version used.

4 Select the language for Browser Remote.

- Press the [▼] next to the language button and select the desired language from the list. Most buttons and controls emulate physical controls on the camcorder and are labeled in English only, regardless of the language selected.

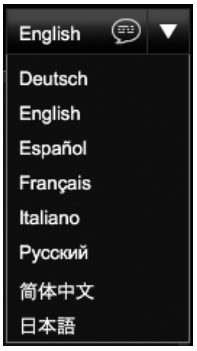

5 Use the Browser Remote controls to operate the camcorder.

- Descriptions of the controls are given in the following pages. Detailed operation is given in each function's reference page.

6 When you have finished using Browser Remote, on the camcorder set [Other Functions] [Network Functions] to [Off] and the press SET.

- The network icons will turn yellow and then disappear from the camcorder's screen and the connection with the application will be terminated.

NOTES

- Depending on the network used and the strength of the Wi-Fi signal (for Wi-Fi connections), you may notice delays in the refreshing of the live view image and other settings.
- While color bars are displayed on the camcorder, the live view image will not be displayed.

The [Advanced Control] Screen

* [Full Control User]/[Camera Control User] only.

When using a computer, tablet and other devices with larger screens, the [Advanced Control] screen offers all the controls available for operating the camcorder remotely via Browser Remote. For details, refer to each function's explanation.

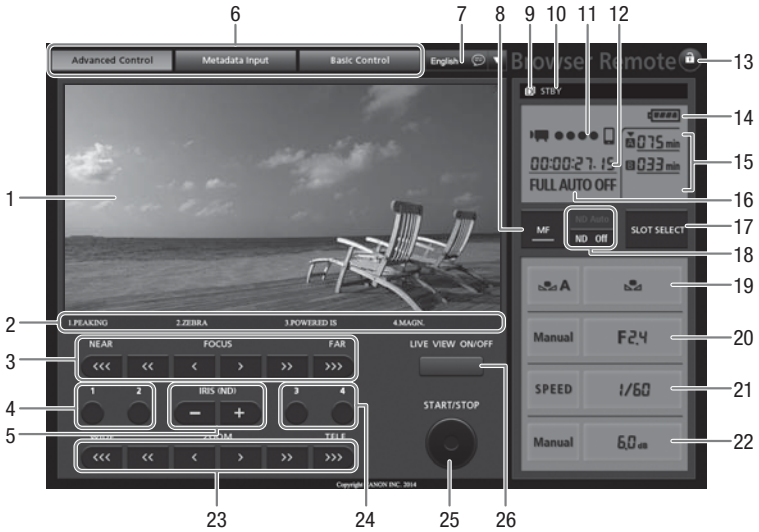

1 Live view screen* (📖 50)
2 Current functions of assignable buttons 1 to 4* (📖 129)
3 Focus controls (📖 81)
4 Assignable buttons 1 and 2 (📖 130)
5 IRIS (ND) -/+ buttons (📖 65)
6 Browser Remote screen selection tabs ([Full Control User] only)
7 Language selection (📖 184)
8 Focus mode button (📖 81, 83)
9 Double slot recording* (📖 42)
10 Recording operation (📖 52)
11 Network connection indicator*
12 Time code* (📖 90)
13 Key lock button (Browser Remote controls only)
14 Approximate remaining battery charge*
15 Recording media selection and approximate remaining recording time
16 Full auto mode/Infrared mode indicator* (📖 49, 126)
17 SLOT SELECT (CF card slot selection) button (📖 41)
18 ND filter buttons (📖 67)
19 White balance controls (📖 69)
20 Aperture controls (📖 65)
21 Shutter speed controls (📖 58)
22 Gain controls (📖 62)
23 Zoom controls (📖 79)
24 Assignable buttons 3 and 4 (📖 130)
25 START/STOP button (📖 50)
26 LIVE VIEW ON/OFF button (📖 50)

* Onscreen display/indication only. The content or value cannot be changed using Browser Remote.

The [Basic Control] Screen

* [Full Control User] only.

When using a smartphone or other device with a smaller screen, you can use the [Basic Control] screen that offers only the most important shooting controls (START/STOP, live view, zoom and assignable buttons) but will fit in the screen without scrolling. For details, refer to each function's explanation.

1 Open the [Basic Control] screen.

From the [Advanced Control] screen press the [Basic Control] tab.

The [Metadata Input] Screen

* [Full Control User]/[Meta Control User] only.

Using Browser Remote you can create, edit and transfer to the camcorder a metadata profile that can be used to record MXF clips. This metadata profile includes the user memo information (clip title, creator, location and description), as well as GPS information. For details, refer to *Using Metadata* (📖 111).

1 Open the [Metadata Input] screen.

- From the [Advanced Control] screen press the [Metadata Input] tab.
- This step is not necessary when logging in with the user name and password of the [Meta Control User].

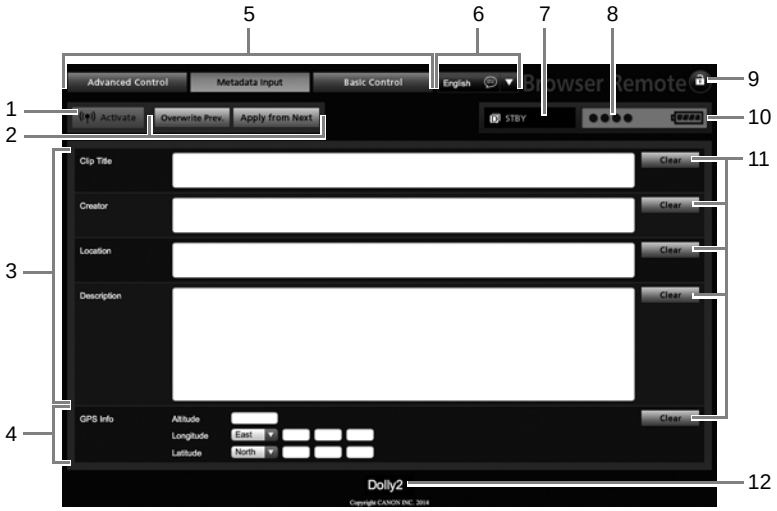

1 [(•) Activate] button (activate metadata control from Browser Remote)
2 Metadata transfer mode selection buttons
3 User memo fields
4 GPS information fields
5 Browser Remote screen selection tabs ([Full Control User] only)
6 Language selection
7 Recording operation
8 Network connection indicator*
9 Key lock button (Browser Remote controls only)
10 Approximate remaining battery charge*
11 [Clear] buttons (clear current data)
12 Camcorder ID*

* Onscreen display/indication only. The content or value cannot be changed using Browser Remote.

NOTES

- Using Browser Remote ([(•) Activate] button) you can give priority to metadata sent through the application. However, you cannot return the priority back to the SD card. To use a user memo file saved on the SD card you will need to set [Other Functions] ➤ [MXF] ➤ [Set Metadata] ➤ [Setting] to [SD Card] on the camcorder itself.

Real-Time Proxy Transfer

You can stream a proxy video file* of the image recorded on the camcorder to a connected iOS or Android device** in order to record it locally on the device. You can then send the video back to a studio or broadcast control unit for immediate reporting from the ground.
In addition to checking the camcorder's live image, with the CameraAccess plus app you can also zoom and start/stop recording (on the iOS/Android device or on the camcorder).

* 1.5 Mbps, 640x360 MP4 video file.
** The CameraAccess plus app needs to be installed on the iOS or Android device. The CameraAccess plus app, provided by PIXELA, is available for free from the App Store (for iOS devices) and Google Play™ (for Android devices).

Operating modes: CAMERA MEDIA | MXF MXF+MP4 MP4

1 On the iOS/Android device, download and install the CameraAccess plus app.
- The app can be downloaded for free from the following Web sites.
  App Store:
  http://appstore.com/cameraaccessplus

  Google Play™:
  http://play.google.com/store/apps/details?id=jp.co.pixela.cameraaccessplus
- This step is necessary only the first time you use this function.

2 Select a Camera Access Point connection (📖 180).

3 To start the Real-Time Proxy Transfer mode on the camcorder, open the [Network Functions] submenu.
[Other Functions] ➤ [Network Functions]

[Other Functions]
[Network Functions]
[Off]

4 Select [RT Proxy Transfer] and then press SET.
- [Connected] will appear on the camcorder's screen.
- While the camcorder is in Real-Time Proxy Transfer mode, only the POWER switch, CANCEL button and the joystick's SET button can be used on the camcorder.

5 On the iOS/Android device's Wi-Fi settings, select the camcorder's access point (📖 180).

6 Start the CameraAccess plus app on the iOS/Android device.

7 Touch Start under Monitor from Home.
- Use the app's onscreen controls to operate the camcorder while viewing the live image on the device.

8 When you have finished recording, press SET on the camcorder to end the Real-Time Proxy Transfer mode.

NOTES
- In real-time proxy transfer mode, the camcorder switches to full auto mode. Additionally, the focus mode changes to autofocus (with no face detection), the zoom mode changes to [Normal] (optical zoom only) and pre-recording is activated automatically.
- Real-time proxy transfer cannot be used when the frame rate is set to 23.98P or together with special recording modes.
- While commands are being sent from the iOS/Android device to the camcorder, you may notice brief stops in the live view image displayed on the iOS/Android device.
- For details about the CameraAccess plus app, visit PIXELA's Web site.
  http://pixela.jp/cecap

FTP File Transfer

After connecting the camcorder to a network, you can transfer clips from the camcorder to another device connected to the network using the FTP protocol. In CAMERA mode, you can transfer the last MP4 clip just recorded. In MEDIA mode, you can transfer multiple clips or photos stored in the recording media in the camcorder.
The following explanations assume that the FTP server is on, ready and correctly configured.

Operating modes: CAMERA MEDIA | MXF MXF+MP4 MP4

Preparations

Before you can transfer clips to a connected device, you need to configure the FTP server settings and other settings related to the handling of folders and files.

FTP Server Settings

To complete this procedure you will need detailed information about the FTP server that will be used as the destination when transferring clips. If necessary, consult the network administrator in charge of the FTP server.

[Other Functions]
[Network Settings]
[FTP Server Settings]

1 Open the [FTP Server Settings] submenu.
[Other Functions] [Network Settings] [FTP Server Settings]

2 To enter the [FTP Server], select [Input] and then press SET.
- Enter the FTP server's IP address or host name using the keyboard screen (176).
- Though the FTP server's host name is not required when using Camera Access Point connections, enter any characters to be able to continue the procedure.

3 Enter the [User Name], [Password], and [Destination Folder] in the same way.

4 To enter the [Port No.], select [Input] and then press SET.
- Push the joystick up/down to select a value for the first digit and then press SET to move to the next digit.
- After completing all the digits, select [Set] and then press SET.

5 Select [OK] and then press SET to confirm the port number.

6 Select whether to turn the passive mode [On] or [Off] and then press SET.
- [Off] is the standard setting for most cases. [On] (passive mode) is more appropriate for FTP transfers within a network behind a firewall.

7 Select [OK] and then press SET to save the FTP server configuration.

8 When the confirmation screen appears, press SET.

FTP Transfer Settings

These settings determine the handling of files and folders on the FTP server.

1 Open the [Create Folder by Date] submenu.
[Other Functions] [Network Settings] [FTP Transfer Settings] [Create Folder by Date]

2 Select the desired option and then press SET.

3 Back in the [FTP Transfer Settings] submenu, select [Same Named Files] and then press SET.

4 Select the desired option and then press SET.

[Other Functions]
[Network Settings]
[FTP Transfer Settings]
[Create Folder by Date]
[On]

[Other Functions]
[Network Settings]
[FTP Transfer Settings]
[Same Named Files]
[Skip]

Options

[On]:	A new subfolder under the transfer destination folder “YYYYMMDD\HHMMSS” will be created for every transfer operation.
[Off]:	All the files will be transferred to the folder set as [Destination Folder] in the FTP server settings.
[Skip]:	If a file with the same name already exists in the destination folder, the file will not be transferred.
[Overwrite]:	Even if a file with the same name already exists in the destination folder, the file will be transferred, overwriting any file with the same name in the destination folder.

FTP Transfer in CAMERA Mode

If you activate the FTP transfer function and set in advance an assignable button to [MP4 FTP Transfer], you can press the button to add the last MP4 clip recorded to the FTP transfer queue (up to 5 clips). MP4 clips are then transferred to the FTP server one by one. The FTP transfer is performed in the background so you can continue recording while the files are transferred. In fact, the transfer will not be interrupted even if you set the camcorder to MEDIA mode.
You can check the FTP-related settings on the status screens (217).

Operating modes: CAMERA MEDIA | MXF MXF+MP4 MP4

1 Set an assignable button to [MP4 FTP Transfer] in advance (129).

2 Connect the camcorder to the desired network (180).

[Other Functions]

[Network Functions]

[Off]

3 To activate the FTP transfer function, open the [Network Functions] submenu.

[Other Functions] [Network Functions]

4 Select [FTP Transfer] and then press SET.

- FTP will appear on the top of the screen, next to the connection type icon. When the icons turn white, the camcorder is ready to transfer files.
- With Camera Access Point connections, you need to actively connect the Wi-Fi enabled device to the camcorder.

5 After recording an MP4 clip, press the assignable button set to [MP4 FTP Transfer].

- The MP4 clip just recorded will be added to the FTP transfer queue.
- The number of MP4 clips in the FTP transfer queue will appear next to the FTP icon.

6 When you have finished transferring the desired clips, turn off the network functions.

- Set [Other Functions] [Network Functions] to [Off] and then press SET.
- The network icons will turn yellow and then disappear from the screen.

FTP Transfer in MEDIA Mode

In MEDIA mode, you can transfer to the FTP server MXF clips recorded on the CF card and MP4 clips or photos recorded on the SD card.
You can check the FTP-related settings on the status screens (217).

Operating modes: CAMERA MEDIA | MXF MXF+MP4 MP4

Transferring a Single Clip or Photo

1 Connect the camcorder to the desired network (180).

- With Camera Access Point connections, you need to actively connect the Wi-Fi enabled device to the camcorder.

2 Select the desired clip or photo and then press SET to open the clip/photo menu.

3 Select [FTP Transfer] and then press SET.

4 Select [OK] and then press SET.

- Select [Cancel] instead to cancel the operation.
- FTP will appear on the top of the screen, next to the connection type icon. When the icons turn white, the clip/photo will be transferred to the FTP server. When using a LAN connection, the LAN access indicator will flash quickly while the file is being transferred.
- While the clip/photo is being transferred, you can press SET to cancel.
- When the transfer is completed, the network icons will turn yellow and then disappear from the screen.

5 When the confirmation message appears, press SET.

Transferring Multiple Clips or Photos

[Other Functions]
[Clips]
[Photos]
[FTP Transfer]

1 Connect the camcorder to the desired network (180).
- With Camera Access Point connections, you need to actively connect the Wi-Fi enabled device to the camcorder.

2 Open the index screen that contains the clips or photos you want to transfer (146).

3 Open the [FTP Transfer] submenu.
[Other Functions] ➤ [Clips] or [Photos] ➤ [FTP Transfer]

4 Select [Select] to select which clips/photos to transfer, or [All] to transfer all the clips/photos and then press SET.
- If you selected [Select], use the joystick to move between the clips/photos. Press SET to select a clip/photo to transfer and repeat as necessary. After selecting all the desired clips/photos, press the MENU button.

5 Select [OK] and then press SET.
- FTP will appear on the top of the screen, next to the connection type icon. When the icons turn white, all the applicable clips/photos will be transferred to the FTP server. When using a LAN connection, the LAN access indicator will flash quickly while the files are being transferred.
- Select [Cancel] instead to cancel the operation.
- While the clips/photos are transferred, you can press SET to cancel.
- When the transfer is completed, the network icons will turn yellow and then disappear from the screen.

6 When the confirmation message appears, press SET.

IMPORTANT
- Observe the following precautions when transferring files. Failing to do so may interrupt the transfer and incomplete files may remain at the transfer destination.
  - Do not open the CF card slot cover or SD card slot cover.
  - Do not disconnect the power source or turn off the camcorder.
- If incomplete files remain at the transfer destination, check the content and make sure they are safe to delete before deleting them.

NOTES
- Depending on the access point's settings and capabilities, it may take some time to transfer files.

Playback via Browser

You can use the Playback via Browser function to access the MP4 clips and photos in the camcorder from the Web browser of a connected network device*. You can then play back your recordings using the Web browser and even save local copies of them on the device.

* Depending on the device, OS, browser and video quality, you may not be able to play back or save recordings. For details, visit your local Canon Web site.

Operating modes: CAMERA | MEDIA | MXF | MXF+MP4 | MP4

1 Open the [MP4] or [Photos] index screen (📖 145).

2 Connect the camcorder to the desired network (📖 180).
- Select a Camera Access Point connection or a wired network connection.

3 Open the [Playback via Browser] submenu and then press SET to activate the function.

[Other Functions] ➤ [Playback via Browser]

- [Connected] and the camcorder's URL will appear on the camcorder's screen.
- While the camcorder is in Playback via Browser mode, only the POWER switch, CANCEL button and the joystick's SET button can be used on the camcorder.
- With Camera Access Point connections, you need to actively connect the Wi-Fi enabled device to the camcorder.

4 Connected device: Start the Web browser and enter the URL displayed on the camcorder's screen.
- The Playback via Browser screen will appear.

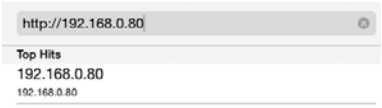

5 Connected device: Play back your recordings.
- To change the index screen displayed, touch/click the button on the top left of the screen (SD MP4 or SD 📷). Touch/click MP4 to show MP4 clips or 📷 to show photos.
- Touch/click the desired recording from the list of recordings. For MP4 clips, touch/click ▶ to play back the clip. For photos, the photo will be displayed.
- Touch/click ▦ to return to the list of recordings.
- Devices other than iOS devices: Touch/click ⬇ to save a local copy of the MP4 clip/photo on the device.

6 Camcorder: When you have finished playing back, press SET to end the Playback via Browser mode.

NOTES
- Only one device may be connected to the camcorder at a time.
- Long recordings, whose video stream file exceeds 4 GB, will be recognized as multiple files on other devices.

8 Photos

Taking Photos

You can take photos when the camcorder is in CAMERA mode or you can capture a photo from a clip when the camcorder is in MEDIA mode. Photos are saved onto the SD card. In MEDIA mode, photo size is 1920x1080*. In CAMERA mode, the photo size depends on the current video configuration. If the resolution is 1920x1080 or 1440x1080, the photo size is 1920x1080; if it is 1280x720, the photo size is also 1280x720.

* At 1920x1080 size, the camcorder can save approximately 670 photos on a 1 GB SD card.

Taking Photos in CAMERA Mode

You can take a photo while the camcorder is recording a clip or is in record pause mode. To take a photo, set an assignable button to [Photo] in advance or use the supplied wireless controller.

Operating modes: CAMERA MEDIA | MXF MXF+MP4 MP4

1 Set an assignable button to [Photo] (📖 129).

2 Press the assignable button to take a photo.

- You can also press the PHOTO button on the supplied wireless controller.
- SD and the number of available photos appear on the upper right of the screen.
- The SD card access indicator will illuminate as the photo is being recorded.

Capturing Photos in MEDIA Mode

You can capture a photo from a clip during playback pause. To capture a photo, set an assignable button to [Photo] in advance or use the supplied wireless controller.

Operating modes: CAMERA MEDIA | MXF MXF+MP4 MP4

1 Set an assignable button to [Photo] (📖 129).

2 Select the desired clip and then press the ▶/❚❚ button to start playback.

3 Pause the playback at the point you want to capture.

4 Press the assignable button to capture a photo.

- You can also press the PHOTO button on the supplied wireless controller.
- SD and the number of available photos appear on the upper right of the screen.
- The SD card access indicator will illuminate as the photo is being recorded.

5 Press the ■ button to stop playback.

IMPORTANT

- Observe the following precautions while the SD card access indicator is on or flashing. Failure to do so may result in permanent data loss.
  - Do not disconnect the power source or turn off the camcorder.
  - Do not remove the SD card.

NOTES

- If the LOCK switch on the SD card is set to prevent writing, you will not be able to record a photo. Change the position of the LOCK switch in advance.

Photo Playback

You can view the photos that you took with the camcorder.

Operating modes: CAMERA MEDIA

Displaying the [Photos] Index Screen

Display the [Photos] index screen to view photos.

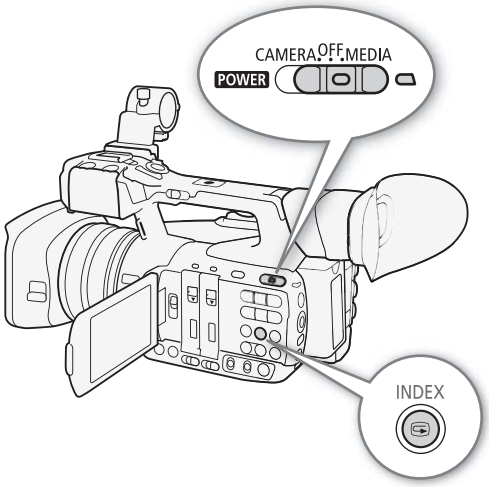

1 Hold down the button on the POWER switch and slide the switch to MEDIA.
- The camcorder switches to MEDIA mode and the MXF clip index screen appears.

2 Press the INDEX button.
- The index screen selection menu appears.

3 Select [Photo Index] and then press SET.
- The [Photos] index screen appears.
- After you are finished viewing photos, press the INDEX button to return to the MXF clip index screen.

Viewing Photos

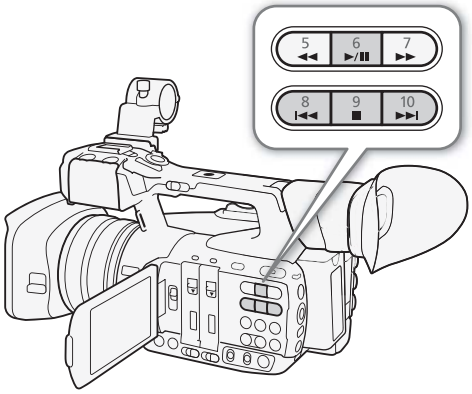

1 Move the orange selection frame to the desired photo.

2 Press the ►/❚❚ button to view the photo.
- The photo playback screen appears and the selected photo is displayed.
- Use the |◄◄/►►| buttons or push the joystick left/right to switch to the previous/next photo.
- Press the DISP. button to hide/show the onscreen displays.
- Press the ■ button to return to the [Photos] index screen.

IMPORTANT

- Observe the following precautions while the SD card access indicator is on or flashing. Failure to do so may result in permanent data loss.
  - Do not disconnect the power source or turn off the camcorder.
  - Do not remove the SD card.

NOTES

- The following photos may not be displayed correctly.
  - Photos not recorded with this camcorder.
  - Photos created or edited on a computer.
  - Photos whose file names have been changed.

Deleting Photos

You can delete a photo you no longer need. Photos can be deleted one at a time from the photo playback screen or [Photos] index screen.

Operating modes: CAMERA MEDIA

Deleting a Photo from the Playback Screen

1 Display the photo to be deleted (📖 197).

2 Press SET to open the photo menu.

3 Select [Delete] and then press SET.
- The screen prompts you to confirm the operation.

4 Select [OK] and then press SET.
- Select [Cancel] instead to cancel the operation.
- The selected photo is deleted.

5 When the confirmation message appears, press SET.

Deleting a Photo from the Index Screen

1 Open the [Photos] Index Screen (📖 197).

2 Move the orange selection frame to the photo to be deleted.

3 Press SET to open the photo menu.

4 Select [Delete] and then press SET.
- The screen prompts you to confirm the operation.

5 Select [OK] and then press SET.
- Select [Cancel] instead to cancel the operation.
- The selected photo is deleted.

6 When the confirmation message appears, press SET.

Deleting Multiple Photos

1 Open the [Delete] submenu.
[Other Functions] ➤ [Photos] ➤ [Delete]

2 Select [Select] to select which photos to delete or [All] to delete all the photos, and then press SET.
- If you selected [Select], use the joystick to move between the photos. Press SET to select a photo to delete and repeat as necessary. After selecting all the desired photos, press the MENU button.

3 Select [OK] and then press SET.
- All the applicable photos on the SD card will be deleted.
- Select [Cancel] instead to cancel the operation.
- While the photos are being deleted, you can press SET to cancel.

4 When the confirmation message appears, press SET.

[Other Functions]
[Photos]
[Delete]

IMPORTANT
- Be careful when deleting photos. Deleted photos cannot be recovered.

Menu Options

For details about how to select an item, refer to *Using the Menus* (📖 29). For details about each function, see the reference page. Menu items without a reference page are explained after the tables. Setting options in boldface indicate default values.
Depending on the camcorder's operating mode and the current selection of other settings, some menu items may not appear at all or may appear grayed out in the menu screens.

To skip directly to the page of a specific menu:

[Camera Setup] menu 📖 199
[Audio Setup] menu 📖 201
[Video Setup] menu 📖 201
[OLED/VF Setup] menu 📖 202
[00:00 TC/UB Setup] menu 📖 204
[Other Functions] menu 📖 204
[★ My Menu] customized menu 📖 208

[Camera Setup] menu (CAMERA mode only)

Menu item	Submenus		Setting options	📖
[Light Metering]			[Backlight], **[Standard]**, [Spotlight]	68
[AE Shift]			[+2.0], [+1.75], [+1.5], [+1.25], [+1.0], [+0.75], [+0.5], [+0.25], **[±0]**, [-0.25], [-0.5], [-0.75], [-1.0], [-1.25], [-1.5], [-1.75], [-2.0]	67
[Gain]	[L]			62
		[Mode]	[Automatic], **[Manual]**	
		[AGC Limit]	**[Off/27 dB]**, [26.00 dB] to [0.0 dB]	
		[Manual]	[Fine Tuning] (0.0 dB), [33.0 dB], [27.0 dB], [24.0 dB], [21.0 dB], [18.0 dB], [15.0 dB], [12.0 dB], [9.0 dB], [6.0 dB], [3.0 dB], **[0.0 dB]**, [-3.0 dB], [-6.0 dB]	
	[M]			
		[Mode]	[Automatic], **[Manual]**	
		[AGC Limit]	**[Off/27 dB]**, [26.00 dB] to [0.0 dB]	
		[Manual]	[Fine Tuning] (0.0 dB), [33.0 dB], [27.0 dB], [24.0 dB], [21.0 dB], [18.0 dB], [15.0 dB], [12.0 dB], [9.0 dB], **[6.0 dB]**, [3.0 dB], [0.0 dB], [-3.0 dB], [-6.0 dB]	
	[H]			
		[Mode]	[Automatic], **[Manual]**	
		[AGC Limit]	**[Off/27 dB]**, [26.00 dB] to [0.0 dB]	
		[Manual]	[Fine Tuning] (0.0 dB), [33.0 dB], [27.0 dB], [24.0 dB], [21.0 dB], [18.0 dB], [15.0 dB], **[12.0 dB]**, [9.0 dB], [6.0 dB], [3.0 dB], [0.0 dB], [-3.0 dB], [-6.0 dB]	
[Shutter]	[Mode]		[Automatic], **[Manual]**	58
	[Manual]		**[Speed]**, [Angle], [Clear Scan], [Slow]	
	[Shutter Increment]		**[Normal]**, [Fine]	
[ND Filter]			**[Automatic]**, [Off]	67

Menu item	Submenus	Setting options	📖
[White Balance]	[B]	**[AWB]**, [Set]	69
	[A]	[AWB], **[Set]**	
	[PRESET]		
	[Mode]	[AWB], **[Preset]**	
	[Preset]	**[Daylight]**, [Tungsten], [Kelvin]	
[AF Mode]	[Speed]	**[High]**, [Medium], [Normal]	81
	[Face AF]	[Face Priority], [Face Only], **[Off]**	85
[Focus Limit]		[On], **[Off]**	86
[OIS Functions]	[Select]	**[Img Stab.]**, [Off]	87
	[Image Stabilizer]	[Dynamic], **[Standard]**	
[Wide-End Angle]		[Wider], **[Normal]**	74
[Zoom]	[Mode]	[Tele-converter 6.0x], [Tele-converter 3.0x], [Tele-converter 1.5x], [Digital Zoom], **[Normal]**	74
	[Speed Level]	[Fast], **[Normal]**, [Slow]	
	[Soft Zoom Control]	[Both], [Stop], [Start], **[Off]**	
	[Grip Rocker]		
	[Select]	[Constant], **[Variable]**	
	[Constant Speed]	1 to 16 **(8)**	
	[Handle Rocker H]	1 to 16 **(16)**	
	[Handle Rocker L]	1 to 16 **(8)**	
	[Wireless Controller]	1 to 16 **(8)**	
	[High-Speed Zoom]	**[On]**, [Off]	
	[Focal Length]	[Set to 0], **[Off]**	128
[Flicker Reduction]		[Automatic], **[Off]**	61
[Conversion Lens]		[TL-H58], [WA-H58], **[Off]**	80
[Color Bars]	[Enable]	[On], **[Off]**	107
	[Type]	**[SMPTE]**, [ARIB]	
[Infrared]	[Monochrome]	**[White]**, [Green]	126
	[Light]	**[Toggle]**, [Always On], [Always Off]	
	[Slow Shutter]	[On], **[Off]**	
[Custom Picture]	[SET CP Select File]	–	132
	[CP Edit File]	See the explanations on the reference page.	133, 135
	[CP Transfer File]	For custom picture files in the camcorder: [Copy To SD], [Load From SD] For custom picture files on the SD card: [Copy To Cam.], [Load From Cam.]	134

[♪)) Audio Setup] menu

Menu item	Submenus	Setting options	📖
[Audio Input]	[4-Channel Input]	[On], **[Off]**	100
	[CH3/CH4 Mode]	**[Automatic]**, [Manual]	106
	[CH3/CH4 Level]	0 to 99 **(50)**	
	[MP4 Channels]	**[CH1/CH2]**, [CH3/CH4]	100
	[CH2 Input]	**[INPUT 2]**, [INPUT 1]	103
	[INPUT 1 Mic Trimming]	[+12 dB], [+6 dB], **[0 dB]**, [-6 dB], [-12 dB]	104
	[INPUT 1 Mic Att.]	[On], **[Off]**	104
	[INPUT 2 Mic Trimming]	[+12 dB], [+6 dB], **[0 dB]**, [-6 dB], [-12 dB]	104
	[INPUT 2 Mic Att.]	[On], **[Off]**	104
	[INPUT 1&2 ALC Link]	[Linked], **[Separated]**	105
	[INPUT 1&2 Limiter]	[On], **[Off]**	106
	[MIC Att.]	[On], **[Off]**	101
	[MIC Low Cut]	[On], **[Off]**	
	[Int. Mic Att.]	[On], **[Off]**	
	[Int. Mic Low Cut]	**[Off]**, [LC1], [LC2]	
	[Int. Mic Sensitivity]	**[Normal]**, [High]	
	[1 kHz Tone]	[-12 dB], [-18 dB], [-20 dB], **[Off]**	107
[Audio Output]*	[Monitor Delay]	[Line Out], **[Normal]**	167
	[Monitor Channels]	**[CH1/CH2]**, [CH1/CH1], [CH2/CH2], [CH1+2/CH1+2], [CH3/CH4], [CH3/CH3], [CH4/CH4], [CH3+4/CH3+4], [CH1+3/CH2+4]	166
	[HDMI Channels]	**[CH1/CH2]**, [CH3/CH4]	
	[Level]	**[1 Vrms]**, [2 Vrms]	167
	[Headphone Volume]	[Off], 1 to 15 **(8)**	149
	[Speaker Volume]	[Off], 1 to 15 **(8)**	

* In MEDIA mode, not available in some index screens and playback modes.

[Video Setup] menu

Menu item	Submenus	Setting options	📖
XF205 [3G/HD-SDI]*		In CAMERA mode: [Direct], [Compatible], **[Off]** In MEDIA mode: [On], **[Off]**	163
XF205 [3G-SDI Mapping]		[Level A], **[Level B]**	
XF205 [MON.]		[HD], [SD], **[Off]**	163
[HDMI]		**[Normal]**, [+1920x1080 59.94P]	164
[HD/SD Output]	[HD Onscreen Displays]	[On], **[Off]**	165
	[SD Onscreen Displays]	[On], **[Off]**	
	[Resize SD Output]	**[Letterbox]**, [Squeeze], [Side Crop]	165
[Rec Command]		[On], **[Off]**	49
[HDMI Time Code]		[On], **[Off]**	96
XF205 [GENLOCK/SYNC OUT]		**[Genlock]**, [SYNC Output]	94, 96
XF205 [SYNC Scan Mode]		**[P]**, [PsF]	96

* In MEDIA mode, not available in some index screens and playback modes.

[OLED/VF Setup] menu

Menu item	Submenus	Setting options	📖
[OLED Setup]	[Brightness]	-99 to 99 **(±0)**	34
	[Contrast]	-99 to 99 **(±0)**	
	[Color]	-20 to 20 **(±0)**	
	[Sharpness]	1 to 4 **(2)**	
	[Luminence]	[On], **[Off]**	
	[Color Balance]		
	[R-B Simult. Adjust.]	-25 to 25 **(±0)**	
	[R Fine Tuning]	-25 to 25 **(±0)**	
	[B Fine Tuning]	-25 to 25 **(±0)**	
[Viewfinder Setup]	[Brightness]	-99 to 99 **(±0)**	34
	[Contrast]	-99 to 99 **(±0)**	
	[Color]	-20 to 20 **(±0)**	
	[Sharpness]	1 to 4 **(2)**	
	[Backlight]	**[Normal]**, [Bright]	
[OLED Mirror Image]		[On], **[Off]**	33
[OLED/VF B&W]		[On], **[Off]**	35
[OLED/VF Simul.]		**[On]**, [Off]	34
[Audio Level]*		**[On]**, [Off]	–
[Display Metadata]*	[Date/Time]	[On], **[Off]**	–
	[Camera Data]	[On], **[Off]**	
[Peaking]	[Setting]	[On], **[Off]**	84
	[Select]	**[Peaking 1]**, [Peaking 2]	
	[Peaking 1]		
	[Color]	**[White]**, [Red], [Yellow], [Blue]	
	[Gain]	[Off], 1 to 15 **(8)**	
	[Frequency]	1 to 4 **(2)**	
	[Peaking 2]		
	[Color]	[White], **[Red]**, [Yellow], [Blue]	
	[Gain]	[Off], 1 to 15 **(15)**	
	[Frequency]	1 to 4 **(1)**	
[Zebra]	[Setting]	[On], **[Off]**	89
	[Select]	**[Zebra 1]**, [Zebra 2], [Zebra 1&2]	
	[Zebra 1 Level]	**[70 ±5%]**, [75 ±5%], [80 ±5%], [85 ±5%], [90 ±5%], [95 ±5%]	
	[Zebra 2 Level]	[70%], [75%], [80%], [85%], [90%], [95%], **[100%]**	
	[HD Output]	[On], **[Off]**	
[Markers]	[Enable]	[On], **[Off]**	88
	[Center]	[Black], [Gray], **[Off]**	
	[Horizontal]	[Black], [Gray], **[Off]**	
	[Grid]	[Black], [Gray], **[Off]**	
	[Safe Area]	[Black], [Gray], **[Off]**	
	[Safe Area Setting]	[80%], [90%], [92.5%], **[95%]**	
	[Aspect Marker]	[Black], [Gray], **[Off]**	
	[Aspect Ratio]	[4:3], [13:9], [14:9], [1.66:1], [1.75:1], [1.85:1], **[2.35:1]**	

Menu item	Submenus	Setting options	📖
[Custom Display 1]	[Zoom Position]	[Always On], **[Normal]**, [Off]	51, 142
	[Light Metering]	**[On]**, [Off]	
	[Custom Picture]	**[On]**, [Off]	
	[ND Filter]	**[On]**, [Off]	
	[Focus Mode]	**[On]**, [Off]	
	[Object Distance]	[Always On], **[Normal]**, [Off]	
	[Full Auto]	**[On]**, [Off]	
	[Infrared]	**[On]**, [Off]	
	[White Balance]	**[On]**, [Off]	
	[Exposure]	**[On]**, [Off]	
	[Iris]	**[On]**, [Off]	
	[Gain]	**[On]**, [Off]	
	[Shutter]	**[On]**, [Off]	
	[Conversion Lens]	**[On]**, [Off]	
	[Tele-converter]	**[On]**, [Off]	
	[Peaking]	**[On]**, [Off]	
	[Magnification]	**[On]**, [Off]	
	[OIS Functions]	**[On]**, [Off]	
[Custom Display 2]	[Remaining Battery]	[Only Warnings], **[Normal]**, [Off]	
	[Remaining Rec Time]	[Only Warnings], **[Normal]**, [Off]	
	[Recording Mode]	**[On]**, [Off]	
	XF205 [Genlock]	**[On]**, [Off]	
	[Time Code]	**[On]**, [Off]	
	[Interval Counter]	**[On]**, [Off]	
	[Remaining Photos]	[Only Warnings], **[Normal]**, [Off]	
	[Temperature/Fan]	**[On]**, [Off]	
	[Movie Format]	**[On]**, [Off]	
	[Bit Rate/Resolution]	**[On]**, [Off]	
	[Frame Rate]	**[On]**, [Off]	
	[OSD Recording]	**[On]**, [Off]	
	[Wireless Controller]	**[On]**, [Off]	
	[Output Display]	[On], **[Off]**	
	[Rec Command]	**[On]**, [Off]	
	[User Memo]	**[On]**, [Off]	
	[User Bit]	**[On]**, [Off]	
	[Monitor Channels]	**[On]**, [Off]	
	[Audio Level]	**[On]**, [Off]	
	[4-Channel Input]	**[On]**, [Off]	
	[Network Functions]	**[On]**, [Off]	
	[GPS]	**[On]**, [Off]	
	[Date/Time]	[Date/Time], [Time], [Date], **[Off]**	

* In MEDIA mode, not available in some index screens and playback modes.

[Audio Level] (MEDIA mode only): Displays the audio level meter during playback mode when set to [On].

[Display Metadata] (MEDIA mode only): Displays the date and time of recording and/or the camera data (shutter speed, aperture value, gain) during the playback of MXF clips. During the playback of MP4 clips, when [Date/Time] is set to [On] only the date of recording is displayed. During photo playback, the date and time of recording is always displayed (this setting is not available).

[00:00 TC/UB Setup] menu (CAMERA mode only)

Menu item	Submenu	Setting options	📖
[Time Code]	[Mode]	**[Preset]**, [Regen.]	90
	[Run]	**[Rec Run]**, [Free Run]	90
	[DF/NDF]*	**[DF]**, [NDF]	91
	[Setting]	**[Set]**, [Reset]	90
	XF205 [TC In/Out]	**[In]**, [Out]	95
	XF205 [XF Legacy Sync]	[On], **[Off]**	–
[User Bit]	XF205 [Recording Mode]	**[Internal]**, [External]	95
	XF205 [Output Mode]	**[Fixed]**, [Pulldown]	96
	[Type]	**[Setting]**, [Time], [Date]	93

* When the frame rate is set to 23.98P, the time code is set to [NDF] and this setting cannot be changed.

XF205 [XF Legacy Sync]: Determines the characteristics of the synchronization reference output signal (📖 96) and the characteristics of the time code input/output signals and the genlock reference signal when the frame rate is set to 23.98P.

[On]: Synchronization mode compatible with older Canon XF series camcorders. When the frame rate is set to 23.98P, synchronizes the time code at a 30-frame signal and the Genlock signal at a 29.97 Hz or 59.94 Hz signal. A 59.94i (or 59.94P) signal is output as the synchronization reference output. Use this setting to synchronize the camcorder with a Canon HD Camcorder XF105 or XF305.

[Off]: Standard synchronization mode. When the frame rate is set to 23.98P, synchronizes the time code at a 24-frame signal and the Genlock signal* at a 23.98 Hz signal. The synchronization reference output signal has the same frequency as video output from 3G/HD-SDI terminal. Select this setting to synchronize the camcorder with a Canon HD Camcorder XF205 or with one of the camcorders/digital cinema cameras in the CINEMA EOS SYSTEM lineup.

* Only when [Video Setup] ➤ [3G/HD-SDI] is set to [Direct].

[Other Functions] menu

Menu item	Submenus	Setting options	📖
[Reset]	[All Settings]	**[Cancel]**, [OK]	–
	[Camera Settings]	**[Cancel]**, [OK]	
	[Assignable Buttons][1]	**[Cancel]**, [OK]	
[Transfer Menu/ CP]	[Save To SD]	[Menu], [Menu+ CP]	143
	[Load From SD]	[Menu], [Menu+ CP]	
[Time Zone]		List of world time zones. **[UTC-05:00 New York]**	27
[Set Clock]	[Date/Time]	–	27
	[Date Format]	[YMD], [YMD/24H], **[MDY]**, [MDY/24H], [DMY], [DMY/24H]	

Menu item	Submenus	Setting options	📖
[WFM (OLED)][1]	[Setting]	[WFM], [VS], [Edge Mon.], **[Off]**	108
	[Waveform Monitor]		108
	[Type]	**[Line]**, [Line+Spot], [Field], [RGB], [YPbPr]	
	[Gain]	**[1x]**, [2x]	
	[Vectorscope]		109
	[Type]	[Spot], **[Normal]**	
	[Gain]	**[1x]**, [5x]	
	[Edge Monitor]		109
	[Type]	**[Type 1]**, [Type 2]	
	[Gain]	[Off], 1 to 15 **(12)**	
[Language 言語]		[Deutsch], **[English]**, [Español], [Français], [Italiano], [Polski], [Português], [Русский], **[简体中文]**, [한국어], [日本語]	28
[REMOTE Term.]		[RC-V100], **[Standard]**	45
[Wireless Controller]		**[On]**, [Off]	44
[Assignable Buttons][1]	[1] to [13]	See footnote 2.	129
[Tally Lamp]	[Front]	**[On]**, [Off]	–
	[Rear]		
[POWER LED]		**[On]**, [Off]	–
[Media Access LED]		**[On]**, [Off]	–
[LAN (Ethernet) LED]		**[On]**, [Off]	–
[Fan]		**[On]**, [Automatic]	54
XF205 [Genlock Adjustment]		-1023 to +1023 **(000)**	–
[Movie Format]		**[MXF (CF)]**, [MXF (CF)+MP4 SD], [MP4 SD]	55
[MXF]	[Bit Rate/Resolution]	**[50 Mbps 1920x1080]**, [50 Mbps 1280x720], [35 Mbps 1920x1080], [35 Mbps 1440x1080], [35 Mbps 1280x720], [25 Mbps 1440x1080]	55
	[Frame Rate]	**[59.94i]**, [59.94P], [29.97P], [23.98P]	
	[Relay Recording]	**[On]**, [Off]	42
	[Double Slot Recording]	[On], **[Off]**	
	[Clips]		–
	[Title Prefix]	Two characters, each: [A] to [Z], [0] to [9] (**[AA]**)	
	[Number setting]	**[Set]**, [Reset]	
	[Add CP File]	**[On]**, [Off]	
	[Set Metadata]		111
	[Setting]	[Remote], **[SD Card]**	
	[User Memo]	[Off], list of user memo files available on the SD card	
	[Country Code]	Letters A to Z, numbers 0 to 9, plus sign (+), minus sign (-), colon (:), space	–
	[Organization]		
	[User Code]		
[MP4]	[Bit Rate/Resolution]	When the movie format is set to MP4: [35 Mbps 1920x1080], **[24 Mbps 1920x1080]**, [17 Mbps 1280x720], [9 Mbps 1280x720] When the movie format is set to MXF+MP4: **[Linked to MXF]**, [3 Mbps 640x360]	55
	[Frame Rate]	**[29.97P]**, [23.98P]	
	[Rec Control]	**[START/STOP Button]**, [Assignable Buttons]	123
	[Start/Stop]	[Start], [Stop]	

Menu item	Submenus	Setting options	📖
[Special Recording]		When the movie format is set to MXF: [Interval Recording], [Frame Recording], [Pre-Recording], [Slow & Fast Motion], **[Off]** When the movie format is set to MP4: [Pre-Recording], **[Off]**	118
[Interval Recording]	[Interval]	**[1 sec]** to [10 sec], [15 sec], [20 sec], [30 sec], [40 sec], [50 sec], [1 min] to [10 min]	118
	[Recorded Frames]	When the frame rate is set to 23.98P, 29.97P or 59.94i: **1**, 3, 6, 9 When the frame rate is set to 59.94P: **2**, 6, 12	
[Frame Recording]	[Recorded Frames]	When the frame rate is set to 23.98P, 29.97P or 59.94i: **1**, 3, 6, 9 When the frame rate is set to 59.94P: **2**, 6, 12	119
[Slow & Fast Motion]	[S&F Frame Rate]	12, 15, 18, 20, 21, 22, 24, 25, 26, 27, 28, **30** (all in fps) Only when the resolution is set to 1280x720 also: 32, 34, 36, 40, 44, 48, 54, 60 (all in fps)	120
[Clips] or [Photos]	[Delete][1]		154, 198
	[Select]	–	
	[All]	**[Cancel]**, [OK]	
	[Copy][1]		153
	[Select]	–	
	[OK Mark]	**[Cancel]**, [OK]	
	[All]	**[Cancel]**, [OK]	
	[FTP Transfer][1]		192
	[Select]	–	
	[All]	**[Cancel]**, [OK]	
[Review Recording]		**[Entire Clip]**, [Last 4 sec]	116
[Delete Last Clip]		**[Cancel]**, [OK]	–
[File Numbering][1]		[Reset], **[Continuous]**	117
[Delete All OK Marks]		**[Cancel]**, [OK]	153
[Custom Function]	[Shockless Gain]	[Fast], [Normal], [Slow], **[Off]**	141
	[Shockless WB]	[On], **[Off]**	
	[AE Response]	[High], **[Normal],** [Low]	
	[Iris Limit]	[On], **[Off]**	
	[Iris Ring Direction]	[Reverse], **[Normal]**	
	[Focus Ring Direction]	[Reverse], **[Normal]**	
	[Zoom Ring Direction]	[Reverse], **[Normal]**	
	[Focus Ring Control]	[Fast], **[Normal]**, [Slow]	
	[Zoom Ring Control]	[Fast], **[Normal]**, [Slow]	
	[Focus Assistance B&W]	[Both], [Magnify], [Peaking], **[Off]**	
	[Distance Units]	[Meters],**[Feet]**	
	[Zoom Indicator]	**[Bar]**, [Numerical]	
	[Scan Reverse Rec]	[Both], [Vertical], [Horizontal], **[Off]**	
	[OSD Recording]	[On MXF], **[Off]**	
[Reset Hour Meter]		**[Cancel]**, [OK]	–

Menu item	Submenus		Setting options	📖
[Network Functions]			[FTP Transfer], [Browser Remote], [RT Proxy Transfer], **[Off]**	173
[Playback via Browser][1]			–	193
[Network Settings]	[Connection Settings]			
		[Set Up New]	–	174, 179
		[Select]	**[No.1]** to [No.5]	180
		[Edit]	**[Settings]**, [Rename]	181
	[Remote Settings]			182
		[Camera Settings]	–	
		[Select User]	**[One User (Full Control)]**, [Two Users (Camera/Meta)]	
		[Users Settings]	–	
	[FTP Server Settings]		–	189
	[FTP Transfer Settings]			
		[Create Folder by Date]	**[On]**, [Off]	
		[Same Named Files]	**[Skip]**, [Overwrite]	
[GPS Auto Time][3]			[On], **[Off]**	114
[Initialize Media]	[CF A]		**[Cancel]**, [OK]	41
	[CF B]			
	[SD Card]		[Complete], [Quick]	
[Certification Logos]			–	–
[Firmware]			–	–

[1] In MEDIA mode, not available in some index screens and playback modes.
[2] Setting options for [Assignable Buttons]: [(NONE)], [Img Stab.], [POWERED IS], [Focus Limit], [Face AF], [Backlight], [Spotlight], [Digital Zoom], [Tele-converter], [Wide-End Angle], [Gain Mode], [Shutter Mode], [Shutter Increment], [WB Mode], [PEAKING], [ZEBRA], [WFM], [MAGN.], [TL-H58], [WA-H58], [Color Bars], [Infrared Monochrome], [Infrared Light], [Markers], [OLED Setup], [Viewfinder Setup], [OLED/VF B&W], [Onscreen Display], [MP4 Start/Stop] (only for assignable buttons 1 to 4), [MP4 FTP Transfer], [Add Shot Mark 1], [Add Shot Mark 2], [Add OK Mark], [Add ✓ Mark], [Time Code], [Time Code Hold], [HEADPHONE +], [HEADPHONE -], [Monitor Channels], [Audio Level], [Wireless Controller], [Photo], [Status], [My Menu], [Initialize Media], [User Setting].
The default settings are as follows. [1]: [PEAKING], [2]: [ZEBRA], [3]: [POWERED IS], [4]: [MAGN.], [5] to [10]: [NONE], [11]: [HEADPHONE +], [12]: [HEADPHONE -], [13]: [WFM].
[3] Available only when the optional GP-E2 GPS Receiver is connected to the camcorder.

[Reset]: Reset various camcorder settings.

[All Settings]: Resets all the camcorder's settings to default settings, except for the hour meter.

[Camera Settings] (CAMERA mode only): Resets the white balance, iris, gain, shutter speed, [Camera Setup] settings and custom picture settings to default settings.

[Assignable Buttons]: Resets the assignable buttons to default settings.

[Tally Lamp] (CAMERA mode only): Allows you to set whether the front and rear tally lamps illuminate while the camcorder is recording.

[POWER LED]: Allows you to set whether the power indicator illuminates while the camcorder is on.

[Media Access LED]: Allows you to set whether the CF card access indicators or the SD card access indicator illuminate while the camcorder is accessing a CF card or SD card.

[LAN (Ethernet) LED]: Allows you to set whether the LAN access indicator illuminates when the camcorder is accessing a network via the LAN cable.

[Genlock Adjustment] (CAMERA mode only): The phase difference between the external Genlock signal and the camcorder is initially set to 0. This function allows you to adjust it within the range of approx. ±0.4 H (-1023 to 1023). When setting to 1000 or more or -1000 or less, set the first field to 10 or -10, respectively.

[MXF] ▶ [Clips] settings (CAMERA mode only)

[Title Prefix]: Determines the first 2 characters of the clip name. Combined with the [Number Setting] setting, this constitutes the 6-character clip name.

[Number Setting]: Determines the last 4 digits of the clip name. Combined with the [Title Prefix] setting, this constitutes the 6-character clip name. Select [Set] to assign a desired number to the first clip you record or select [Reset] to reset the number to [0001]. The numerals increase every time a clip is recorded.

[MXF] ▶ [Set Metadata] settings (CAMERA mode only)

[Country Code]: This identifier is the country code defined by ISO-3166-1 and is to be entered starting from the left.

[Organization]: This identifier represents the organization that owns or operates the camcorder and can be obtained by registering with the SMPTE Registration Authority. If the organization is not registered, enter [0000].

[User Code]: This identifier designates the user. Leave this blank if [Organization] is set to [0000].

[Delete Last Clip]: (CAMERA mode only): Deletes the last clip you recorded. This setting option will not appear if you turned the camcorder off since recording the last clip.

[Reset Hour Meter]: The camcorder has two "hour meters" – the first keeps track of total operation time and the second keeps track of operation time since the last time the second hour meter was reset with this function.

[Certification Logos] (MEDIA mode only): This setting displays certification logos that apply to this camcorder.

[Firmware] (CAMERA mode only): You can verify the current version of the camcorder's firmware. This menu option is usually unavailable.

[★ My Menu] (CAMERA mode only)

Menu item	Submenu	Setting options	📖
[Edit]	[Register]	**[Cancel]**, [OK]	30
	[Move]	**[Cancel]**, [OK]	
	[Delete]	**[Cancel]**, [OK]	
	[Reset All]	**[Cancel]**, [OK]	

Displaying the Status Screens

You can use the status screens to check the camcorder's various recording- and playback-related settings. You can also output the status screens on an external monitor.

Operating modes: CAMERA MEDIA | MXF MXF+MP4 MP4

1 Set an assignable button to [Status] in advance (📖 129).

2 Press the assignable button to open the status screens.

- The status screen most recently displayed will appear unless you turned off the camcorder or changed the operating mode. In such case, the [Camera 1/2] status screen appears in CAMERA mode and the [Assignable Buttons 1/2] status screen appears in MEDIA mode.

3 Push the joystick up/down to scroll through the status screens.

4 When you are finished, press the assignable button set to [Status] again to exit the status screens.

- Alternatively, you can press the MENU button. Doing so will exit the status screen and open the menu.

Status screen	Description	CAMERA	MEDIA	📖
[Camera 1/2], [Camera 2/2]	Displays settings related to main recording functions, like gain, focus and zoom.	●	–	210
[Assignable Buttons 1/2], [Assignable Buttons 2/2]	Allows you to verify the current function of each assignable button.	●	●[1]	210
[Audio]	Displays settings related to audio.	●	●	211
[Media]	Displays information about the recording media.	●	●	211
[Video]	Displays the settings for the video terminals and which special recording mode is in effect.	●	●	212
[Metadata 1/2], [Metadata 2/2]	Displays the user memo and other metadata that will be recorded with clips.	●	–	212
[Battery/Hour Meter]	Allows you to check the remaining battery time, battery life and how long the camcorder has been in operation.	●	●	213
[CP Data 1/3], [CP Data 2/3], [CP Data 3/3][2]	Displays the settings for the custom picture file that will be applied and saved with MXF clips.	●	–	213, 214
[Network Settings 1/10] to [Network Settings 10/10]	Displays various settings related to the camcorder's network functions.	●	●	215-217
[GPS Information Display][3]	Displays GPS information.	●	–	217

[1] In MEDIA mode, not available in some index screens and playback modes.
[2] These screens appear only after a custom picture file has been selected.
[3] This screen appears only when an optional GP-E2 GPS Receiver is connected to the camcorder.

[Camera 1/2], [Camera 2/2] Status Screens (CAMERA mode only)

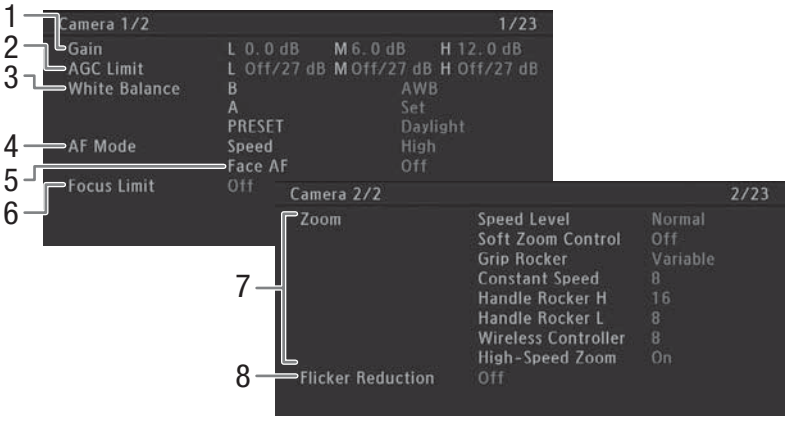

1 Gain values for each GAIN switch position (📖 62)
2 Gain limits for each GAIN switch position (📖 63)
3 White balance settings for each WHITE BAL. switch position (📖 69)
4 AF mode (📖 81)
5 Autofocus for faces (Face AF) (📖 85)
6 Focus limit (📖 86)
7 Zoom speed settings for the various zoom controls (📖 74)
8 Flicker reduction (📖 61)

[Assignable Buttons 1/2], [Assignable Buttons 2/2] Status Screen

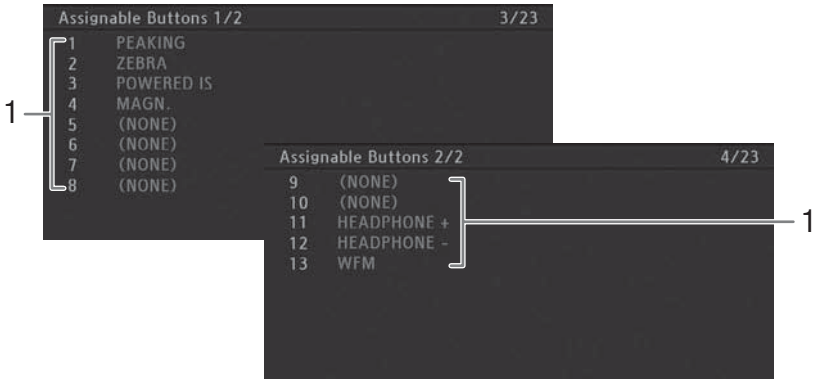

1 Assignable buttons 1 to 13* (📖 129)

* Assignable buttons 5 to 10 do not appear in MEDIA mode.

[Audio] Status Screen

In CAMERA mode

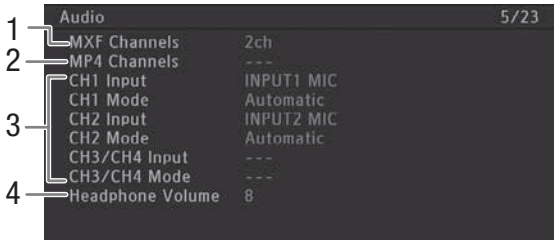

In MEDIA mode

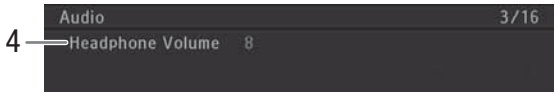

1 Number of audio channels for MXF clips (📖 100)
2 MP4 audio channels during 4-channel audio recording (📖 100)
3 Audio source input and audio level adjustment mode for each audio channel (📖 98)
4 Headphone volume (📖 149)

[Media] Status Screen

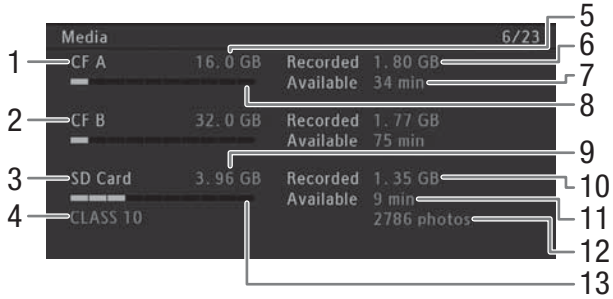

1 CF card A
2 CF card B
3 SD card
4 Speed class of the SD card
5 Total space on CF card A
6 Used space on CF card A
7 Available recording time on CF card A
8 Approximate used space on CF card A
9 Total space on the SD card
10 Used space on the SD card
11 Available recording time on the SD card
12 Available number of shots on the SD card
13 Approximate used space on the SD card

NOTES

- Depending on the recording media, the total space displayed on the screen may differ from the nominal capacity listed on the CF card or SD card.

[Video] Status Screen

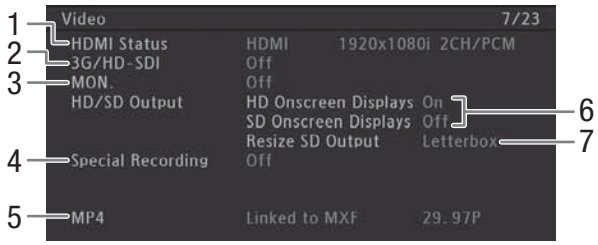

1 HDMI OUT terminal status
2 3G/HD-SDI terminal* output settings (📖 163)
3 MON. terminal* output settings (📖 163)
4 Special recording mode (📖 118)
5 MP4 clip settings for MXF+MP4 simultaneous recording (📖 123)
6 Superimposing onscreen displays (📖 165)
7 SD output setting (📖 165)

* XF205 only.

[Metadata 1/2], [Metadata 2/2] Status Screens (CAMERA mode only)

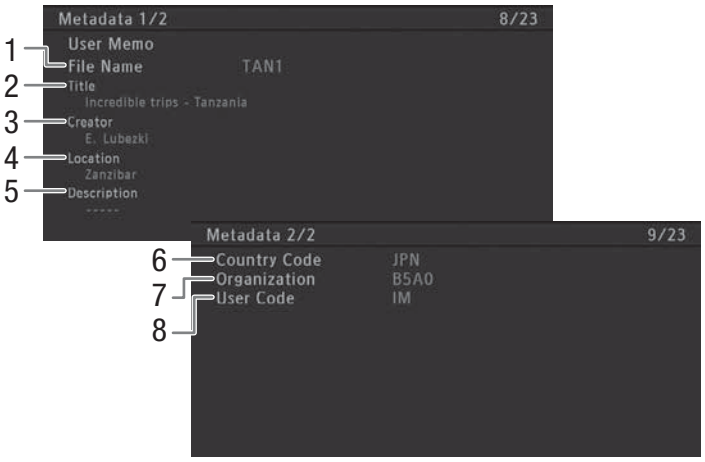

1 User memo file name (📖 111)
2 Clip title
3 Camera operator
4 Filming location
5 Clip description
6 Country code (📖 208)
7 Organization code
8 User code

[Battery/Hour Meter] Status Screen

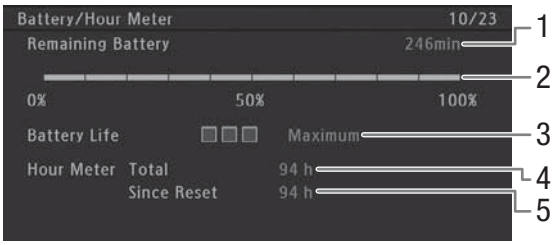

1 Remaining recording time
2 Remaining recording time indicator
3 Battery life indicator
4 Total operation time (📖 208)
5 Operation time since using [Reset Hour Meter] (📖 208)

[CP Data 1/3] Status Screen (CAMERA mode only)

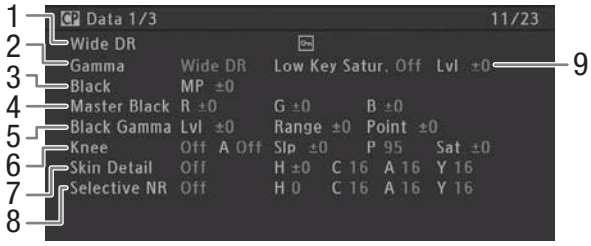

1 Custom picture file name (📖 132) and protection (📖 133)
2 Gamma (📖 135)
3 Master pedestal (📖 136)
4 Master black RGB levels (📖 136)
5 Black gamma settings (level, range and point) (📖 136)
6 Knee settings (slope, point and saturation) (📖 137)
7 Skin detail settings (hue, chroma, area and Y level) (📖 138)
8 Selective NR settings (hue, chroma, area and Y level) (📖 138)
9 Low key saturation (📖 136)

[CP Data 2/3] Status Screen (CAMERA mode only)

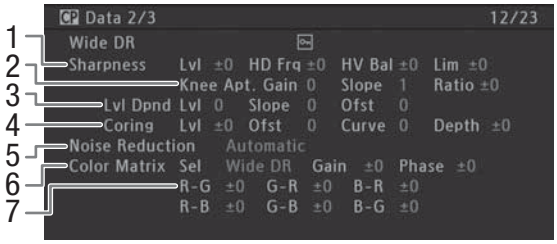

1 Sharpness settings (level, horizontal detail frequency, horizontal/vertical detail balance, and limit) (📖 137)
2 Sharpness settings (knee aperture gain and slope, ingredient ratio) (📖 137)
3 Level depend settings (level, slope and offset) (📖 138)
4 Coring settings (level, offset, curve and depth) (📖 137)
5 Noise reduction (📖 138)
6 Color matrix settings (select, gain and phase) (📖 139)
7 Color matrix settings (📖 139)

[CP Data 3/3] Status Screen (CAMERA mode only)

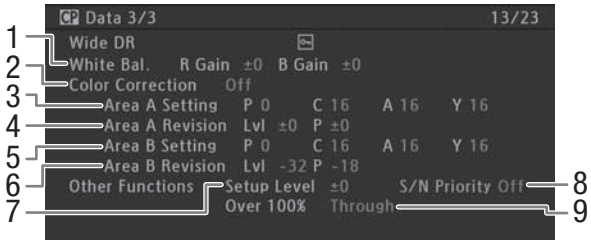

1 White balance R/B gain (📖 139)
2 Color correction (📖 139)
3 Area A settings (phase, chroma, area and Y level) (📖 139)
4 Area A revision settings (level and phase) (📖 139)
5 Area B settings (phase, chroma, area and Y level) (📖 139)
6 Area B revision settings (level and phase) (📖 139)
7 Setup level (📖 140)
8 S/N ratio priority (📖 140)
9 Clips exceeding 100% (📖 140)

[Network Settings 1/10] Status Screen

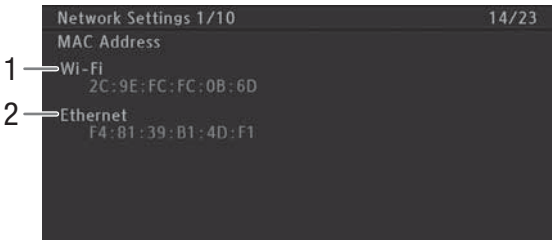

1 Camcorder's MAC address for Wi-Fi networks
2 Camcorder's MAC address for wired networks

[Network Settings 2/10], [Network Settings 3/10] Status Screens

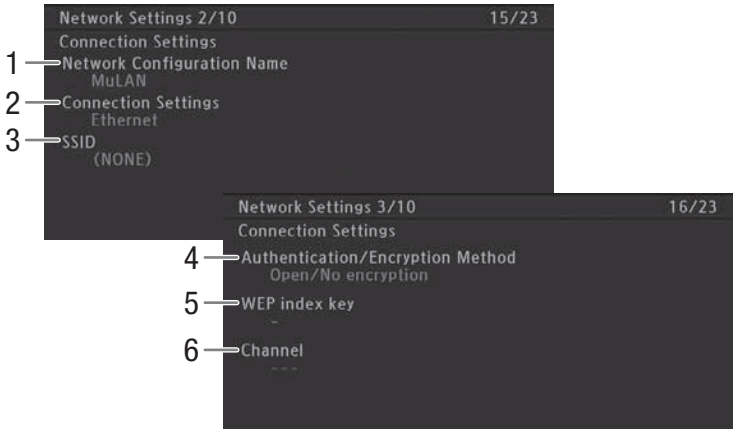

Connection settings of the current network connection (📖 173)

1 Network configuration name (📖 180)
2 Connection type
3 SSID (network name)
4 Authentication and encryption method
5 WEP index key
6 Wi-Fi channel

[Network Settings 4/10], [Network Settings 5/10] Status Screens

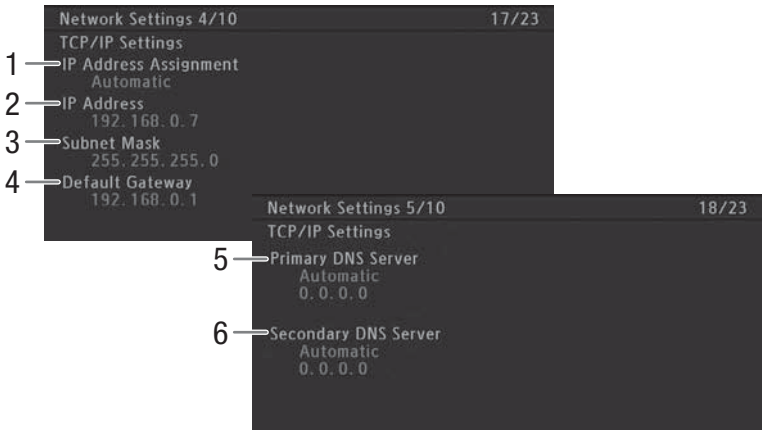

TCP/IP settings of the current network connection (📖 178)

1 IP address assignment method
2 IP address
3 Subnet mask
4 Default gateway
5 Primary DNS server (assignment method/IP address)
6 Secondary DNS server (assignment method/IP address)

[Network Settings 6/10], [Network Settings 7/10] Status Screens

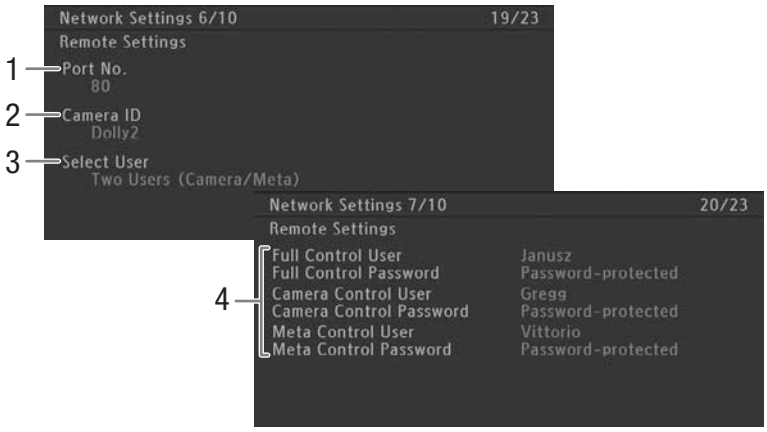

Browser Remote settings (📖 182):

1 Port number
2 Camcorder ID
3 User selection
4 User name and whether a password was set* for each Browser Remote user

* The password itself will not be displayed.

[Network Settings 8/10] through [Network Settings 10/10] Status Screens

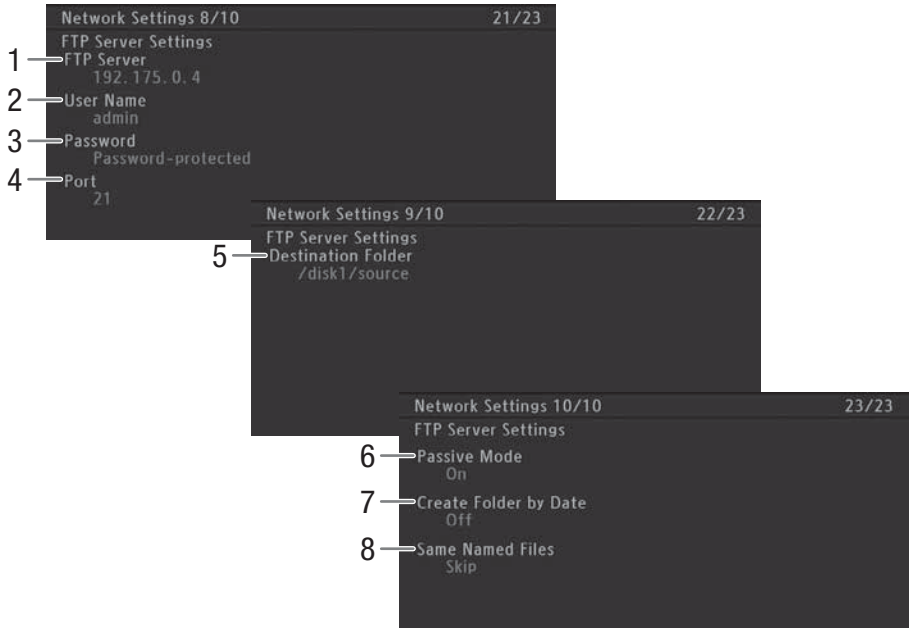

FTP server settings (📖 189):

1 FTP server (host) name
2 User name
3 Password protection*
4 Port number
5 Destination folder on the FTP server
6 Passive mode
7 Create new folders by transfer date
8 Handling of same-named files

* The password itself will not be displayed.

[GPS Information Display] Status Screen (CAMERA mode only)

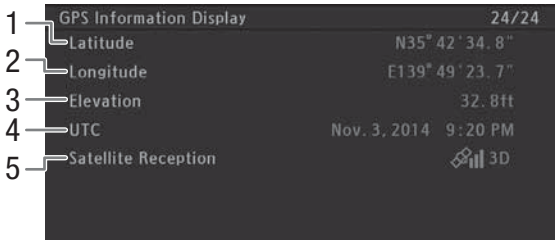

GPS information (📖 114)

1 Latitude
2 Longitude
3 Elevation
4 UTC (coordinated universal time) date and time
5 Satellite signal strength

Troubleshooting

If you have a problem with your camcorder, refer to this section. Consult your dealer or a Canon Service Center if the problem persists.

Power source

The camcorder will not turn on or it turns off by itself.
- The battery pack is exhausted. Replace or charge the battery pack.
- Remove the battery pack and reattach it correctly.

Shortly after turning it on, the camcorder turns off on its own.
- You are using a DC coupler or a battery pack that is not compatible for use with this camcorder. Use a recommended battery pack (📖 233).

Cannot charge the battery pack.
- The temperature of the battery pack is outside the charging range. If the battery pack's temperature is below 0 °C (32 °F), warm it before charging it; if it is above 40 °C (104 °F), let the battery pack cool down before charging it.
- Charge the battery pack in temperatures between 0 °C and 40 °C (32 °F and 104 °F).
- The battery pack is faulty. Replace the battery pack.

The battery pack is exhausted extremely quickly even at normal temperatures.
- Check the [Battery/Hour Meter] status screen (📖 213) to see whether the battery pack is at the end of its service life. If so, buy a new battery pack.

Recording

Pressing the START/STOP button will not start recording.
- The START/STOP lock lever on the handle is set to 🔒, rendering the handle's START/STOP button inoperable. Change the position of the lock lever.

The point where the START/STOP button was pressed does not match the beginning/end of the recording.
- There is a slight interval between pressing the START/STOP button and the actual start/end of recording. This is not a malfunction.

The camcorder will not focus.
- The camcorder may not be able to focus on certain subjects using autofocus. Focus manually (📖 83).
- The viewfinder is not adjusted. Use the dioptric adjustment lever to make the proper adjustment (📖 32).
- The lens or Instant AF sensor is dirty. Clean the lens or sensor with a soft lens-cleaning cloth.

When a subject flits across in front of the lens, the image appears slightly bent.
- This is a phenomenon typical of CMOS image sensors. When a subject crosses very quickly in front of the camcorder, the image may seem slightly warped. This is not a malfunction.

Changing between recording (●REC/●MP4) and record pause (STBY/MP4) takes longer than usual.
- When the recording media contains a large number of clips, some operations may take longer than usual. Save your clips (📖 168) and initialize the recording media (📖 41). Alternatively, replace the recording media.

The camcorder cannot record to the recording media properly.
- This may occur as recordings are made and deleted over time. Save your clips (📖 168) and initialize the recording media (📖 41).

After using the camcorder for a long time, it becomes hot.
- The camcorder may become hot after using it continuously for long periods of time; this is not a malfunction. If the camcorder becomes unusually hot or it becomes hot after using it only for a short while, it may indicate a problem with the camcorder. Consult a Canon Service Center.

Playback

Cannot delete MXF clips.
- You cannot delete MXF clips with an OK mark. Remove the OK mark (📖 153) to delete the clip.

Deleting clips takes longer than usual.
- When the recording media contains a large number of clips, some operations may take longer than usual. Save your clips (📖 168) and initialize the recording media (📖 41).

Cannot delete MP4 clips/photos.
- The LOCK switch on the SD card is set to prevent accidental erasure. Change the position of the LOCK switch.
- Photos that were protected using other devices cannot be deleted with the camcorder.

Cannot copy MXF clips.
- There is not enough available space on the CF card being copied to or the CF card already contains the maximum number of clips (999 clips). Delete some clips (📖 154) to free some space or replace the CF card.

Indicators and Onscreen Displays

appears in red on the screen.
- Battery pack is exhausted. Replace or charge the battery pack.

appears on the screen.
- The camcorder cannot communicate with the battery pack attached so the remaining battery time cannot be displayed.

The tally lamp does not illuminate.
- Set [Other Functions] ➤ [Tally Lamp] ➤ [Front] and/or [Rear] to [On].

The tally lamp flashes quickly. (4 flashes per second)
- The battery pack is exhausted. Replace or charge the battery pack.
- There is not enough available space on the recording media. Delete some clips (📖 154) to free some space or replace the recording media.
- A system error has occurred. Turn off the camcorder and back on again. If this does not solve the problem, consult a Canon Service Center.

The tally lamp flashes slowly. (1 flash per second)
- The combined available space on both CF cards is low. Replace the CF card that is not being recorded onto.
- Available space on the SD card is low. Replace the SD card.

appears in red on the screen.
- An SD card error occurred. Remove and reinsert the SD card. If the display does not change back to normal, save your MP4 clips (📖 168) and photos and initialize the SD card (📖 41).

Even after stopping recording, the CF card access indicator or SD card access indicator stays illuminated in red.
- The clip is being recorded. This is not a malfunction.

keeps flashing on the screen.
- You connected the optional GP-E2 GPS Receiver to the camcorder's USB terminal in MEDIA mode. Disconnect the GP-E2 and connect in again after setting the camcorder in CAMERA mode.

XF205 Gen. keeps flashing on the screen.
- The camcorder cannot lock on the external Genlock signal being input. Check the external signal. If necessary, check the [TC/UB Setup] ➤ [XF Legacy Sync] setting (📖 204).

Picture and Sound

The OLED screen is too dark.
- Adjust the brightness with the [OLED/VF Setup] ➤ [OLED Setup] ➤ [Brightness] setting. To make the screen brighter temporarily, set [OLED/VF Setup] ➤ [OLED Setup] ➤ [Luminence] to [On].

Screen displays turn on and off repeatedly.
- The battery pack is exhausted. Replace or charge the battery pack.
- Remove the battery pack and reattach it correctly.

Abnormal characters appear on the screen and the camcorder does not operate properly.
- Disconnect the power source and reconnect it after a short time. If the problem still persists, use the [Other Functions] ➤ [Reset] ➤ [All Settings] function. This resets all the camcorder's settings to default values except for the hour meter.

Video noise appears on screen.
- Keep a distance between the camcorder and devices that emit strong electromagnetic fields such as near powerful magnets and motors, MRI machines or high-voltage power lines.

Horizontal bands appear on the screen.
- This is a phenomenon typical of CMOS image sensors when recording under some types of fluorescent, mercury or sodium lamps. This is not a malfunction. You may be able to reduce the symptoms by setting [Camera Setup] ➤ [Flicker Reduction] to [Automatic] and/or by setting [Camera Setup] ➤ [Shutter] ➤ [Manual] to [Speed] and the shutter speed to a value matching the frequency of the local electrical system (1/50* or 1/100 for 50 Hz systems, 1/60 or 1/120 for 60 Hz systems).
  * May not be available depending on the frame rate.

Audio cannot be recorded.
- The AUDIO IN selection switch is not set correctly (📖 103).
- An external microphone connected to the INPUT 1/INPUT 2 terminal requires phantom power. Set the corresponding INPUT 1/INPUT 2 audio input selection switch to MIC+48V (📖 103).
- The external microphone connected to the MIC terminal is not turned on or its battery is empty.

Audio is recorded at an extremely low level.
- The audio level for CH1 or CH2 is set to M, and the recording level is set too low. During 4-channel audio recording: [Audio Setup] ➤ [Audio Input] ➤ [CH3/CH4 Mode] is set to [Manual] and [CH3/CH4 Level] is set to a level too low. Check the audio level meter on the screen and adjust the audio level correctly (📖 105, 106).
- The microphone attenuator is on. Turn off the microphone attenuator (📖 102, 104).

Sound is distorted or is recorded at lower levels.
- When recording near loud sounds (such as fireworks, shows or concerts), sound may become distorted or it may not be recorded at the actual levels. Activate the microphone attenuator (📖 102, 104), or adjust the audio recording level manually.

The picture is displayed correctly but there is no sound from the built-in speaker.
- Speaker volume is turned off. Adjust the volume (📖 149).
- If headphones are connected to the camcorder, disconnect them.

Recording Media and Accessories

Cannot insert the recording media.
- The CF card or SD card you are trying to insert is not facing the correct direction. Turn it over and insert it.

Cannot record on the CF card.
- A compatible CF card must be used (📖 38).
- Initialize the CF card (📖 41) when you use it with the camcorder for the first time.
- The CF card is full or it already contains the maximum number of clips (999 clips). Delete some clips (📖 154) to free some space or replace the CF card.

Cannot record on the SD card.
- A compatible SD card must be used (📖 38).
- Initialize the SD card (📖 41) when you use it with the camcorder for the first time.
- The LOCK switch on the SD card is set to prevent accidental erasure. Change the position of the LOCK switch.
- The SD card is full. Delete some clips (📖 154) and photos (📖 198) to free some space or replace the SD card.
- The folder and file numbers for MP4 clips and photos have reached their maximum value. Set [Other Functions] ➤ [File Numbering] to [Reset] and insert a new SD card.

Recording to and playing back from a recording media is slow.
- This may occur as clips and photos are recorded/deleted over time. Save your recordings (📖 168) and initialize the recording media (📖 41).

The supplied wireless controller will not work.
- Set [Other Functions] ➤ [Wireless Controller] to [On].
- Replace the battery of the wireless controller.

The optional RC-V100 Remote Controller or other commercially available remote control does not work.
- Make sure that [Other Functions] ➤ [REMOTE Term.] is set to [RC-V100] when using the optional RC-V100 Remote Controller or [Standard] when using a commercially available remote control.
- Turn off the camcorder, reconnect the RC-V100 or other remote control and then turn the camcorder back on again.
- A custom picture file saved in the camcorder must be selected to change custom picture settings using the remote controller. Select a custom picture file from [C1] to [C9] (📖 132).

Connections with External Devices

Video noise appears on a nearby TV screen.
- When using the camcorder in a room where a TV is located, keep a distance between the compact power adapter and the power or antenna cables of the TV.

Playback looks fine on the camcorder but there is no image on the external monitor.
- The camcorder is not connected correctly to the external monitor. Make sure you are using the correct connection (📖 162).
- The video input on the external monitor is not set to the video terminal to which you connected the camcorder. Select the correct video input.

The camcorder is connected using a commercially available HDMI cable, but there is no picture or sound from the external monitor.
- Disconnect the HDMI cable and then restore the connection or turn the camcorder off and then on again.

The computer does not recognize the camcorder even though the camcorder is connected correctly.
- Disconnect the optional IFC-400PCU USB Cable and turn off the camcorder. After a short while, turn it on again and restore the connection.
- Connect the camcorder to a different USB port on the computer.

Network Functions

Cannot connect with an access point.
- Wi-Fi networks with a stealth function that do not broadcast their network name (SSID) will not be detected by the camcorder during the Wi-Fi network setup. Perform the setup manually (📖 177) or turn off the stealth function of the access point.
- Password information is not saved with the camera settings. When you load onto the camcorder camera settings from an SD card, all the encryption keys and passwords in the network-related settings are reset. Edit the network-related settings as necessary (📖 181, 182).
- The wireless signal is not strong enough or there are other devices in the vicinity interfering with the wireless signal. Refer to *Precautions Regarding Wi-Fi Networks* (📖 222).

Cannot establish a Camera Access Point connection with a Wi-Fi-enabled device.
- When you reset all the camcorder's settings, all network settings are lost as well. Set up the Camera Access Point settings again (📖 177).
- The wireless signal is not strong enough or there are other devices in the vicinity interfering with the wireless signal. Refer to *Precautions Regarding Wi-Fi Networks* (📖 222).

Cannot connect with a wired (Ethernet) network.
- Use a category 5e or better shielded twisted pair (STP) LAN cable.
- Try replacing the LAN cable.
- When you reset all the camcorder's settings, all network settings are lost as well. Set up the network settings again (📖 179).
- Check that the network device to which the camcorder is connected is on and functioning properly. To use 1000BASE-T connection speeds, make sure to use network devices compatible with Gigabit Ethernet (1000BASE-T).

The LAN access indicator illuminates in red and then turns off.
- The LAN cable was disconnected or the camcorder cannot communicate with the connected network device. Check the LAN connection and the connected network device.

The Playback via Browser application will not start on the Web browser.
- Make sure to activate the function on the camcorder with the [Other Functions] ➤ [Playback via Browser] setting (📖 193).
- The URL entered into the Web browser's address bar is incorrect. Enter the URL exactly as it appears on the camcorder's screen.
- The SD card slot cover is open or there is no SD card in the camcorder. Check that an SD card that contains MP4 clips and photos is correctly inserted into the camcorder and the SD card slot cover is closed.

The Browser Remote application will not start on the Web browser.

- Make sure [Other Functions] ➤ [Network Functions] is set to [Browser Remote].
- The URL entered into the Web browser's address bar is incorrect. Check the [Network Settings 4/10] status screen and make sure to use the IP address assigned to the camcorder as the URL (📖 183).
- The user name or password is incorrect. Make sure to enter the user name and password of one of the users set on the camcorder (📖 182).

The Browser Remote or Playback via Browser screen is not displayed correctly on the Web browser.

- The device, operating system or Web browser used may not be supported. For the latest information about supported systems, visit your local Canon Web site.
- Enable JavaScript and cookies in your Web browser's settings. For details, refer to the help modules or online documentation of the Web browser used.

Using the Playback via Browser application, playback on a Wi-Fi-enabled device is not smooth.

- The wireless signal is not strong enough or there are other devices in the vicinity interfering with the wireless signal. Refer to *Precautions Regarding Wi-Fi Networks* (📖 222).
- Playback may not be smooth depending on the strength of the wireless connection.
- Try connecting the camcorder to a wired network using a LAN cable.

Precautions Regarding Wi-Fi Networks

When using a Wi-Fi network, try the following corrective actions if the transmission rate drops, the connection is lost, or other problems occur.

Location of the access point (wireless router)

- When using a Wi-Fi network indoors, place the access point in the same room where you are using the camcorder.
- Place the access point in an open, unobstructed location, where people or objects do not come between it and the camcorder.
- Place the access point as close as possible to the camcorder. In particular, note that during outdoor use in poor weather, rain may absorb radio waves and disrupt the connection.

Nearby electronic devices

- If the transmission rate over a Wi-Fi network drops because of interference from the following electronic devices, switching to the 5 GHz band or to a different channel may solve the problem.
- Wi-Fi networks using the IEEE 802.11b/g/n protocol operate in the 2.4 GHz band. For this reason, the transmission rate may drop if there are nearby microwave ovens, cordless telephones, microphones, or similar devices operating on the same frequency band.
- If another access point operating on the same frequency band as the transmitter is used nearby, the transmission rate may drop.

Using multiple camcorders/access points

- Check that there are no IP address conflicts among the devices connected to the same network.
- If multiple XF200 / XF205 camcorders are connected to a single access point, connection speeds may be reduced.
- To reduce radio wave interference when there are multiple access points using IEEE 802.11b/g or IEEE 802.11n (in the 2.4 GHz band), leave a gap of four channels between each wireless access point. For example, use channels 1, 6, and 11, channels 2, 7, and 12, or channels 3, 8, and 13. If you can use IEEE 802.11a/n (in the 5 GHz band), switch to IEEE 802.11a/n and specify a different channel.

List of Messages

Refer to this section if a message appears on the screen. The messages in this section appear in alphabetical order. Note that for some messages, an indication of the recording media involved (CF A, CF B, SD, or a combination thereof) may appear above the message itself.
For error messages related to network connections, refer to *Network Functions* (📖 225).

Accessing CF A/CF B/SD Do not remove
- You opened the CF card slot cover or SD card slot cover while the camcorder was accessing the recording media. Close the relevant card slot cover.

Buffer overflow. Recording was stopped.
- The data transfer rate was too high for the recording media card in use and the recording was stopped. Use a recommended card (📖 38).

Cannot acquire battery information Continue using this battery pack?
- You attached a battery pack that does not bear the Intelligent System mark.
- If you are using a battery pack that bears the Intelligent System mark, there may be a problem with the camcorder or battery pack. Consult a Canon Service Center.

Cannot play back
- The file control information is corrupted or there was a decoder error. Turn off the camcorder and back on again. If this does not solve the problem, consult a Canon Service Center.
  - Corrupted file control information cannot be recovered. CF cards or MXF clips with corrupt file control information cannot be read by Canon XF Utility or the Canon XF plugins.

Cannot record
- The file control information is corrupted or there was an encoder error. Turn off the camcorder and back on again. Then, remove the CF card being used and reinsert it. Alternatively, replace the CF card. If this does not solve the problem, consult a Canon Service Center.
  - Corrupted file control information cannot be recovered. CF cards or MXF clips with corrupt file control information cannot be read by Canon XF Utility or the Canon XF plugins.

Cannot restore
- Could not recover data on the CF card. Save your MXF clips (📖 168) and initialize the CF card (📖 41).

Cannot switch CF card slots
- The SLOT SELECT button was pressed while the camcorder is recording or when the movie format is set to MP4. Wait until recording is finished to change the selected CF card slot.

CF A/CF B error
- The CF card cannot be recognized or cannot be accessed. Check that the CF card is inserted correctly and not malfunctioning.

CF A→CF B / CF B→CF A Switched
- This message appears when you use the SLOT SELECT button to switch the CF card slot in use or recording continued from one CF card to the other.

CF A→CF B / CF B→CF A Will switch in a moment
- The CF card is almost full so recording will continue on the other CF card in approximately 1 minute.

Change the battery pack
- The battery pack is exhausted. Replace or charge the battery pack.

Check the data on CF A/CF B Initializing the card is also recommended
- The CF card cannot be used for any of the following reasons.
  - A problem has occurred with the CF card.
  - The camcorder cannot read the CF card's data.
  - The CF card was initialized using a computer.
  - The CF card has been partitioned.
- Save your MXF clips (📖 168) and initialize the CF card (📖 41).

Check the data on SD Initializing the card is also recommended
- You inserted an SD card that was formatted using another device into the camcorder. Initialize the SD card with this camcorder.

Check the SD card
- You inserted a MultiMedia Card (MMC) or an SD card with a capacity of 64 MB or smaller into the camcorder. Use a recommended SD card (📖 38).
- Due to an SD card error, recording/playback Is not possible. Remove and then reinsert the SD card or use a different SD card.

Cover is open
- The CF card slot cover or SD card slot cover was opened when the camcorder was switched to or turned on in CAMERA mode. Check that the recording media is correctly inserted and close the relevant card slot cover.

Data on CF A/CF B needs recovering Attempt to recover?
- If data on the CF card is corrupted, such as when the power suddenly turned off while recording, the data must be recovered. When this message appears, select [OK] and then press SET.

Do not disconnect the USB cable or the power source until you safely end the connection from the computer.
- When the camcorder is in MEDIA mode and is connected to the computer with the optional IFC-400PCU USB Cable, the camcorder cannot be operated. Disconnecting the USB cable or power source while this message appears may corrupt the recordings on the recording media in the camcorder. Use the computer's Safely Remove Hardware function to end the connection and disconnect the USB cable before using the camcorder.

Fan error
- The cooling fan may not be working properly. Consult a Canon Service Center.

File name error
- The folder and file numbers have reached their maximum value. Set [Other Functions] ➤ [File Numbering] to [Reset] and delete all the MP4 clips (📖 154) and photos (📖 198) on the SD card or initialize it (📖 41).

INFRARED switch position changed (ON/OFF). Check the focus.
- The focus may change when you turn the infrared mode on or off. Check that the focus is correct.

Invalid operation
- The following operations cannot be performed.
  - Adding a shot mark to an MXF clip that already has a shot mark or to an MXF clip in frame recording mode or interval recording mode.
  - Adding an OK mark to an MXF clip that already has an OK mark or adding a ✔ mark to a clip that already has a ✔ mark.
  - In CAMERA mode, immediately reviewing a recording made in a special recording mode.
  - Pressing the START/STOP button, or trying to start recording an MP4 clip, when there is no recording media in the camcorder.

Management data is not supported and will be deleted
- This message may appear if you insert into the camcorder a CF card that was initialized by another Canon professional camcorder. Check the contents of the CF card.

Management file error Cannot record
- Cannot record because the camcorder cannot write to the file control information. This may occur if the MXF files on the CF card were accessed using another device. Save your MXF clips (📖 168) and initialize the CF card (📖 41).

May not be possible to record movies on this memory card
- You may not be able to record MP4 clips on an SD card without a Speed Class rating or rated CLASS 2 or 4. Replace the SD card with one rated CLASS 6 or 10.

Media full
- The recording media is full. Delete some recordings (📖 154, 198) to free some space or replace the recording media.
- CF card A or CF card B is full so recording will not start. Switch to the CF card in the other CF card slot to record.

Media is almost full
- The amount of available space on CF card A and CF card B combined is low. Replace the CF card that is not selected.
- The SD card is almost full. Delete some recordings (📖 154, 198) to free some space or replace the SD card.

Media is not supported
- CF cards that are less than 512 MB or not UDMA-compatible cannot be used with the camcorder. Use a recommended CF card (📖 38).

Memory card is write-protected
- The LOCK switch on the SD card is set to prevent accidental erasure. Change the position of the LOCK switch.

No clips
- There are no clips on the recording media to play back. Clips must be recorded (📖 47) in order to play them back.

No photos
- There are no photos on the SD card to play back. Photos must be taken (📖 195) in order to view them.

No Shot Marks
- This message appears if shot marks in a clip were deleted from the [Shot Mark] index screen. Press the INDEX button to return to the MXF clip index screen.

Number of clips already at maximum
- The CF card selected for recording already contains the maximum number of MXF clips (999 clips). Replace the CF card or use the CF card in the other CF card slot.
- Because both CF cards reached the maximum number of clips, double slot recording is not available.

Number of Shot Marks at maximum
- The shot mark could not be added because the MXF clip already contains 100 shot marks (S1 and S2 marks combined). You must delete shot marks (📖 157) before adding any more.

Reached the recording limit for one clip. Recording was stopped.
- When recording a single MXF clip for an extended period of time, the clip will be split into smaller video files every 2 GB (or 1 GB when recording in slow motion). This message will appear when the number of smaller video files reaches 99.

Recorded at 50.00 Hz Check the data on CF A/CF B Initializing the card is also recommended
- The CF card contains MXF clips that were recorded using a system frequency different from the one used by the camcorder. Back up the content of the CF card if necessary and initialize the CF card with this camcorder (📖 41).

Recording was stopped.
- The file control information is corrupted or there was an encoder error. Turn off the camcorder and back on again. Then, remove the CF card being used and reinsert it. Alternatively, replace the CF card. If this does not solve the problem, consult a Canon Service Center.
  - Corrupted file control information cannot be recovered. CF cards or clips with corrupt file control information cannot be read by Canon XF Utility or the Canon XF plugins.

Shot Mark Error
- Could not add a shot mark. If the message appears in CAMERA mode, try adding the mark again. If that does not work, add the mark in MEDIA mode after you finish recording. If the message appears in MEDIA mode, turn off the camcorder and then back on. Then, try to add the mark again.

System error
- Turn off the camcorder and back on again. If this does not solve the problem, there may be a malfunction with the camcorder. Consult a Canon Service Center.

The sound of the Zoom motor may also be recorded.
- Be careful when operating the zoom while recording as the sound of the zoom motor may be recorded as well. Try zooming while the camcorder in record pause mode.

This clip needs recovering. Attempt to recover?
- If the clip is corrupted, such as when the power suddenly turned off while recording, the clip must be recovered. When this message appears, select [OK] and then press SET.

This photo cannot be displayed
- You may not be able to display photos taken with other devices or image files created or edited on a computer.

Using a card that supports UDMA mode 4 or higher is recommended
- The CF card's UDMA mode is lower than UDMA4. We recommend using a CF card that with a UDMA mode of at least UDMA4.

☑ / OK Mark Error
- Could not add a ☑ mark or OK mark. If the message appears in CAMERA mode, try adding the mark again. If that does not work, add the mark in MEDIA mode. If the message appears in MEDIA mode, turn off the camcorder and then back on. Then, try to add the mark again.

Network Functions

Along with this list, refer also to the instruction manuals of the access point or other external devices you are using.

A User is already accessing the server. Try again later.
- This message appears on the screen of the connected device. Another device connected to the network is already operating the camcorder. To use this device, first end the connection on the device accessing the camcorder and then touch Retry.

Cannot create new folder on the FTP server.
- Check the user permissions/restrictions for accessing the FTP server.

Cannot log in to FTP server.
- Check the user name and password information in the FTP server settings (📖 189).

Cannot transfer files to FTP server.
- Check that there is enough available space in the data storage device (hard disk, etc.) that contains the destination folder on the FTP server.

Check the Media.
- An error occurred with the recording media while files were being transferred to the FTP server. Check the recording media from which you are transferring files and try the FTP transfer operation again.

Check the network configuration.
- The camcorder could not connect to the network using the current settings. Check that the network settings are correctly configured (📖 215).

File transfer was not completed.
- The camcorder was turned off while the last FTP transfer operation was still in progress. Transfer the files again (📖 189).

FTP server not found.
- The FTP server could not be found. Check the FTP server settings (📖 189).

FTP transfer error. File transfer was not completed.
- An error occurred while transferring files to the FTP server. Turn then camcorder and the FTP server off and then on again and try again the FTP transfer.

IP address conflict
- Another device on the same network has the same IP address assigned to the camcorder. Change the IP address of the conflicting device or the camcorder.

LAN cable not connected.
- You attempted to connect to a wired network but the LAN cable is not connected. Check that the LAN cable is correctly connected to the camcorder's LAN terminal and to the LAN port on the network device.

Memory card cover was opened so network functions will be interrupted.
- The CF card slot cover or SD card slot cover was opened while the recording media was being accessed. Stop the network function in use and end the network connection.

Multiple access points detected. Try the operation again.
- There are multiple access points sending out a WPS signal at the same time. Try the operation again later or perform setup using the [WPS: PIN Code] or [Search for Access Points] option (📖 175).

Network connection terminated
- An error occurred on the access point or connected device. Check the network or connected and try connecting again.
- The Wi-Fi signal became too weak and the wireless connection was lost. Wait a moment or turn off other devices in the area that may be interfering with the Wi-Fi signal and then try connecting again.

Network is not working correctly
- There's a hardware problem with the camcorder's network related circuitry. Try turning the camcorder off and the on again. If the problem persists, consult a Canon Service Center.

No access points found
- The camcorder searched for active Wi-Fi networks (access points) in the area but none were found. Make sure the access point is working correctly and try connecting again.
- The access point is operating in stealth mode. Deactivate the stealth function in the wireless router (access point) settings.
- The connection wizard may not be able to find the access point if MAC address filtering is activated. Check the [Network Settings 1/10] status screen (📖 215) and make sure to add the camcorder's MAC address to the list of approved wireless devices in the wireless router (access point) settings.

No files available for transfer.
- All the files selected for transfer have already been transferred to the FTP server.

Unable to complete WPS.
- The access point's encryption method is set to [WEP]. Wi-Fi Protected Setup (WPS) cannot connect to access points set to this encryption method. Change the access point's encryption method or use another connection method (📖 174).

Unable to complete WPS. Try the operation again.
- More than 2 minutes passed between activating WPS on the access point and selecting [OK] on the camcorder. Start over the WPS procedure from the beginning.
- The WPS button was not held down long enough. Refer to the instruction manual of your wireless router. When using WPS to make a wireless connection, keep the WPS button held down until the wireless router's WPS function is activated.

Unable to connect

- Could not connect to the access point or network device selected.
- Cordless phones, microwave ovens, refrigerators and other appliances may interfere with the wireless signal. Try using the camcorder in a location farther away from such appliances.

Unable to obtain an IP address

- If you are not using a DHCP server, connect using the [Manual] option and enter the IP address using the [Manual] option (📖 178).
- Turn on the DHCP server. If it is already on, make sure it is functioning properly.
- Make sure the address range for the DHCP server is sufficient.
- If you are not using a DNS server, set the DNS address to [0.0.0.0].
- Set the DNS server's IP address in the camcorder.
- Turn on the DNS server. If it is already on, make sure it is functioning properly.
- Make sure that the DNS server's IP address and the name for that address are correctly configured.
- If you are using a wireless gateway router, make sure all of the devices in the network, including the camcorder, are configured with the correct gateway address.

Wi-Fi authentication unsuccessful

- Check the access point's authentication/encryption method and encryption key and change the camcorder's Wi-Fi settings (📖 181) as necessary.

Wi-Fi cannot be used while the wireless microphone is attached.

- Wi-Fi connections cannot be used while an optional WM-V1 Wireless Microphone is attached to the camcorder. Disconnect the WM-V1 from the camcorder and turn it off.

Wi-Fi error. Incorrect authentication method

- Check the access point's authentication/encryption method and change the camcorder's Wi-Fi settings (📖 181) as necessary.

Wi-Fi error. Incorrect encryption key.

- When the authentication mode was set to [WPA-PSK] or [WPA2-PSK], or the encryption method was set to [WEP], the encryption key (WEP index) entered or its length (number of characters) is incorrect.
  - When entering ASCII characters, enter 5 characters (64-bit encoding) or 13 characters (128-bit encoding). When entering hexadecimal characters, enter 10 characters (64-bit encoding) or 26 characters (128-bit encoding).

Wi-Fi error. Incorrect encryption method

- Make sure the camcorder and access point are using the same authentication/encryption method.

Handling Precautions

Camcorder

Be sure to observe the following precautions to ensure maximum performance.

- Do not carry the camcorder by the OLED panel. Be careful when closing the OLED panel.
- Do not leave the camcorder in places subject to high temperatures (like the inside of a car parked under direct sunlight), or high humidity.
- Do not use the camcorder near strong electromagnetic fields such as near powerful magnets and motors, MRI machines or high-voltage power lines. Using the camcorder in such places may cause anomalies in the video or audio or video noise to appear.
- Do not use the camcorder's Wi-Fi functions inside hospitals, medical clinics or onboard aircraft. In addition, do not use them near medical equipment or sensitive electronic devices as it may affect their performance. In the case of pacemakers, keep the camcorder at least 22 cm (8.7 in.) away from the device.
- The camcorder's Wi-Fi functions may be subject to interference from devices such as cordless phones and microwave ovens. Keeping as much distance as possible from these devices or using the camcorder's Wi-Fi functions at a different time of day may reduce such interference.
- Do not use or store the camcorder in dusty or sandy places. The camcorder is not waterproof – avoid also water, mud or salt. If any of the above should get into the camcorder it may damage the camcorder and/or the lens. Consult a Canon Service Center as soon as possible.
- Be careful to avoid dust and dirt particles accumulating on the lens or entering the camcorder. When you finish using the camcorder, make sure to remove the lens hood and attach the lens cap to the camcorder.
- Do not point the camcorder or viewfinder toward an intense light source, such as the sun on a sunny day or an intense artificial light source. Doing so may damage the image sensor or the camcorder's internal components. Be careful especially when using a tripod or shoulder strap. When you are not using the camcorder, make sure to attach the lens cap to the camcorder.
- Be careful of heat generated by lighting equipment.
- Do not disassemble the camcorder. If the camcorder does not function properly, consult qualified service personnel.
- Handle the camcorder with care. Do not subject the camcorder to shocks or vibration as this may cause damage. When using the shoulder strap, do not allow the camcorder to swing and hit an object.

Long-term storage

If you do not intend to use the camcorder for a long time, store it in a place free of dust, in low humidity, and at temperatures not higher than 30 °C (86 °F).

Battery Pack

DANGER!

Treat the battery pack with care.

- Keep it away from fire (or it might explode).
- Do not expose the battery pack to temperature higher than 60 °C (140 °F). Do not leave it near a heater or inside a car in hot weather.
- Do not try to disassemble or modify it.
- Do not drop it or subject it to shocks.
- Do not get it wet.

- Dirty terminals may cause a poor contact between the battery pack and the camcorder. Wipe the terminals with a soft cloth.

Long-term storage

- Store battery packs in a dry place at temperatures no higher than 30 °C (86 °F).
- To extend the battery life of the battery pack, discharge it completely before storing it.
- Charge and discharge all your battery packs fully at least once a year.

Always attach the battery terminal cover.

Do not allow any metal objects to touch the terminals (figure 1), as this can cause a short circuit and damage the battery pack. Attach the terminal cover whenever the battery pack is not being used (figure 2).

The battery terminal cover has a [▭]-shaped hole. This is useful when you wish to differentiate between charged and uncharged battery packs. For example, with charged battery packs, attach the terminal cover so that the [▭]-shaped hole shows the colored label.

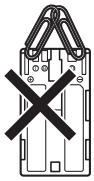

Figure 1

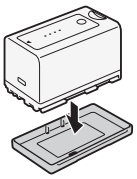

Figure 2

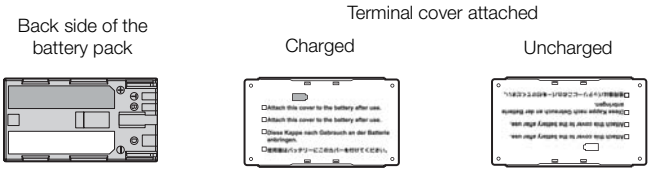

Remaining battery time

When using a battery pack compatible with Intelligent System, if the remaining battery time displayed is not correct, charge the battery pack fully. Still, the correct time may not be displayed if a fully charged battery pack is used continuously in high temperatures or it is left unused for long periods of time. Also, the correct remaining time may not be displayed, depending on the battery life. Use the time shown on the screen as an approximation.

Regarding the use of non-Canon battery packs

- We recommend using genuine Canon battery packs bearing the Intelligent System mark. Intelligent Li-ion Battery
- If you attach to the camcorder battery packs that are not genuine Canon battery packs, the remaining battery time will not be displayed.

Recording Media

- We recommend backing up the recordings on the recording media onto your computer. Data may be corrupted or lost due to defects or exposure to static electricity. Canon shall not be liable for lost or corrupted data.
- Do not touch or expose the terminals to dust or dirt.
- Do not use recording media in places subject to strong magnetic fields.
- Do not leave recording media in places subject to high humidity and high temperature.
- Do not disassemble, bend, drop, or subject recording media to shocks and do not expose them to water.
- Check the direction before inserting the recording media. Forcing recording media into the slot if it is not correctly oriented may damage the recording media or the camcorder.
- Do not attach any labels or stickers on the recording media.

- **SD cards:** SD cards have a physical switch to prevent writing on the card so as to avoid the accidental erasure of the card's content. To write-protect the SD card, set the switch to the LOCK position.

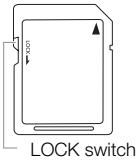

Disposal

When you delete data on the recording media, only the file allocation table is altered and stored data is not physically erased. Take the necessary precautions when you dispose of the recording media, for example by physically damaging it to prevent the leakage of private data.
If giving the recording media to another person, initialize it (using the [Complete] initialization option for SD cards, 📖 41). Fill it up with unimportant recordings, and then initialize it again. This makes recovering the original recordings very difficult.

Built-in Rechargeable Lithium Battery

The camcorder has a built-in rechargeable lithium battery to keep the date/time and other settings. The built-in lithium battery is recharged while you use the camcorder; however, it will discharge completely if you do not use the camcorder for about 3 months.

To recharge the built-in lithium battery: Connect the compact power adapter to the camcorder and use a household power outlet to power the camcorder for 24 hours while it is turned off.

Lithium Button Battery

WARNING!

- The battery used in this device may present a fire or chemical burn hazard if mishandled.
- Do not disassemble, modify, immerse in water, heat above 100 °C (212 °F) or incinerate the battery.
- Replace with a CR2025 battery made by Panasonic, Hitachi Maxell, Sony, Sanyo, or with Duracell2025. Use of other batteries may present a risk of fire or explosion.
- Do not insert the battery into the mouth. If swallowed, seek medical assistance immediately. The battery case may break and the battery fluids may cause internal injuries.
- Keep the battery out of the reach of children.
- Do not recharge, short-circuit or insert the battery in the wrong direction.
- Dispose of the used battery according to applicable recycling regulations.

- Do not pick up the battery using tweezers or other metal tools, as this will cause a short circuit.
- Wipe the battery with a clean dry cloth to ensure proper contact.
- For CA, USA only
  Included lithium battery contains Perchlorate Material - special handling may apply.
  See www.dtsc.ca.gov/hazardouswaste/perchlorate/ for details.

Maintenance/Others

Cleaning

Camcorder Body

- Use a soft, dry cloth to clean the camcorder body. Never use chemically treated cloths or volatile solvents such as paint thinner.

Lens and Instant AF Sensor

- If the lens surface or Instant AF sensor is dirty, autofocus may not work properly.
- Remove any dust or dirt particles using a non-aerosol type blower brush.
- Use a clean, soft lens-cleaning cloth to gently wipe the lens and sensor using commercially available cleaning fluid for eyeglasses. Never use tissue paper.

OLED Screen

- Clean the OLED screen using a clean, soft lens-cleaning cloth.
- Condensation may form on the surface of the screen when the temperature changes suddenly. Wipe it with a soft dry cloth.

Condensation

Moving the camcorder rapidly between hot and cold temperatures may cause condensation (water droplets) to form on its internal surfaces. Stop using the camcorder if condensation is detected. Continued use may damage the camcorder.

Condensation may form in the following cases:

- When the camcorder is moved quickly from cold to warm places
- When the camcorder is left in a humid room
- When a cold room is heated rapidly

To avoid condensation

- Do not expose the camcorder to sudden or extreme changes in temperature.
- Remove the recording media and battery pack. Then, place the camcorder in an airtight plastic bag and let it adjust gradually to temperature changes before removing it from the bag.

When condensation is detected

The camcorder automatically shuts off.
The precise time required for water droplets to evaporate will vary depending on the location and weather conditions. As a general rule, wait for 2 hours before resuming use of the camcorder.

Using the Camcorder Abroad

Power Sources

You can use the compact power adapter to operate the camcorder and to charge battery packs in any country with power supply between 100 and 240VAC, 50/60Hz. Consult a Canon Service Center for information on plug adapters for overseas use.

Optional Accessories

The following optional accessories are compatible with this camcorder. The availability differs from area to area.

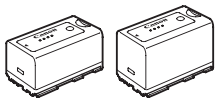

BP-950G, BP-955,
BP-970G, BP-975
Battery Pack

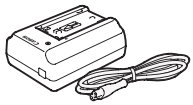

CA-930 Compact
Power Adapter

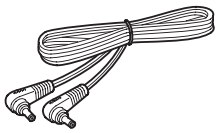

DC-930 DC Cable

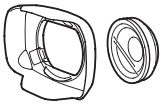

WA-H58 Wide
Attachment

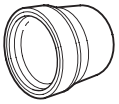

TL-H58 Tele-converter

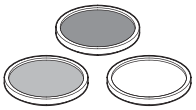

Protect Filter 58 mm,
ND4L Filter 58 mm,
ND8L Filter 58 mm

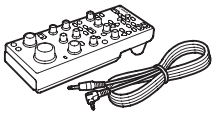

RC-V100 Remote
Controller

GP-E2
GPS Receiver

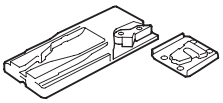

TA-100 Tripod Adapter

TB-1 Tripod Adapter
Base

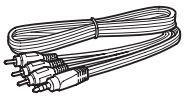

STV-250N
Stereo Video Cable

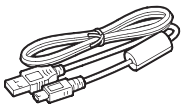

IFC-400PCU
USB Cable

For our customers in the USA: Call or visit your local retailer/dealer for genuine Canon video accessories. You can also obtain genuine accessories for your Canon camcorder by calling: 1-800-828-4040, Canon U.S.A. Information Center.

Use of genuine Canon accessories is recommended.
This product is designed to achieve excellent performance when used with genuine Canon accessories. Canon shall not be liable for any damage to this product and/or accidents such as fire, etc., caused by the malfunction of non-genuine Canon accessories (e.g., a leakage and/or explosion of a battery pack). Please note that this warranty does not apply to repairs arising out of the malfunction of non-genuine Canon accessories, although you may request such repairs on a chargeable basis.

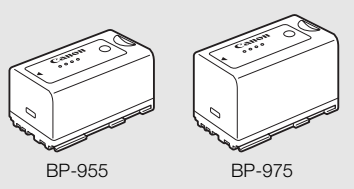

Battery Packs

When you need extra battery packs, select from the following: BP-950G, BP-955, BP-970G*, BP-975*.

When you use battery packs bearing the Intelligent System mark, the camcorder will communicate with the battery and display the remaining usage time (accurate to 1 minute). You can only use and charge these battery packs with camcorders and chargers compatible with Intelligent System.

*The optional BP-970G / BP-975 Battery Pack were not originally designed for use with this camcorder.

Charging Times

Use the supplied CA-930 Compact Power Adapter to charge battery packs. The charging times given in the following table are approximate and vary according to charging conditions and initial charge of the battery pack.

BP-950G	BP-955	BP-970G	BP-975
245 min.	200 min.	350 min.	295 min.

Recording and Playback Times

Recording and playback times given in the following tables are approximate and were measured under the following conditions:

- XF205 The 3G/HD-SDI terminal and MON. terminal are turned off.
- The OLED screen and viewfinder are both turned on.
- Typical recording times measure recording with repeated operations such as start/stop recording and power on/off.

Actual times will vary according to recording mode and charging, recording or playback conditions. The effective usage time of the battery pack may decrease when recording in cold surroundings, when using the brighter screen settings, etc.

XF200

Movie format (bit rate)	Usage time	BP-950G	BP-955	BP-970G	BP-975
MXF (50 Mbps)	Recording (maximum)	270 min.	260 min.	380 min.	380 min.
	Recording (typical)	160 min.	150 min.	220 min.	235 min.
	Playback	375 min.	360 min.	520 min.	520 min.
MP4 (35 Mbps)	Recording (maximum)	280 min.	265 min.	390 min.	390 min.
	Recording (typical)	165 min.	155 min.	225 min.	240 min.
	Playback	365 min.	350 min.	510 min.	515 min.

XF205

Movie format (bit rate)	Usage time	BP-950G	BP-955	BP-970G	BP-975
MXF (50 Mbps)	Recording (maximum)	260 min.	250 min.	360 min.	360 min.
	Recording (typical)	150 min.	150 min.	220 min.	235 min.
	Playback	345 min.	335 min.	485 min.	490 min.
MP4 (35 Mbps)	Recording (maximum)	275 min.	260 min.	380 min.	385 min.
	Recording (typical)	160 min.	150 min.	220 min.	235 min.
	Playback	360 min.	345 min.	505 min.	505 min.

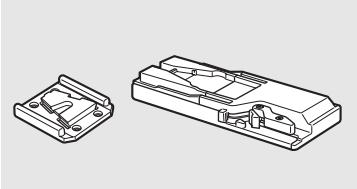

TA-100 Tripod Adapter

The TA-100 allows you to quickly mount/unmount the camcorder on/from a tripod.

This mark identifies genuine Canon video accessories. When you use Canon video equipment, we recommend Canon-brand accessories or products bearing the same mark.

Specifications

XF200 / XF205

System

- Recording System

MXF Movies: Video compression: MPEG-2 Long GOP
Audio compression: Linear PCM, 16 bits, 48 kHz, 2 or 4 channels
File format: MXF
MP4 Movies: Video compression: MPEG-4 AVC/H.264
Audio compression: MPEG-4 AAC-LC, 16 bits, 48 kHz, 2 channels
File format: MP4
Photos: DCF (Design rule for Camera File system), compatible with Exif Ver. 2.3, JPEG compression

- Video Configuration (recording/playback)

MXF Movies:
50 Mbps (CBR, 4:2:2, 422P@HL)
1920x1080: 59.94i, 29.97P, 23.98P
1280x720: 59.94P, 29.97P, 23.98P
35 Mbps (VBR, 4:2:0, MP@HL)
1920x1080: 59.94i, 29.97P, 23.98P
1440x1080: 59.94i
1280x720: 59.94P, 29.97P, 23.98P
25 Mbps (CBR, 4:2:0, MP@H14)
1440x1080: 59.94i, 29.97P, 23.98P
MP4 Movies (audio bit rate give in brackets [ ]):
35 Mbps (VBR)
1920x1080: 59.94P [256 kbps]
24 Mbps (VBR)
1920x1080: 29.97P, 23.98P [256 kbps]
17 Mbps (VBR)
1280x720: 59.94P [128 kbps]
9 Mbps (VBR)
1280x720: 29.97P, 23.98P [128 kbps]
3 Mbps (VBR)[1]
640x360: 29.97P, 23.98P [128 kbps]

[1] Only when the movie format is set to MXF+MP4.

- Recording Media (not included)

MXF Movies: CompactFlash (CF) Card Type I (two slots)
MP4 Movies and Photos: SD, SDHC (SD High Capacity) or SDXC (SD eXtended Capacity) memory card[2]

[2] Custom picture files, camera settings and user memo files can be saved on and read from the SD card as well.

- Maximum Recording Time (approximate, continuous recording)

MXF Movies:
16 GB CF Card
50 Mbps: 40 min., 35 Mbps: 55 min., 25 Mbps: 80 min.
64 GB CF Card
50 Mbps: 160 min., 35 Mbps: 225 min., 25 Mbps: 310 min.
MP4 Movies:
16 GB SD card
35 Mbps: 60 min., 24 Mbps: 85 min., 17 Mbps: 125 min., 9 Mbps: 235 min., 3 Mbps: 685 min.
32 GB SD card
35 Mbps: 120 min., 24 Mbps: 175 min., 17 Mbps: 255 min., 9 Mbps: 470 min., 3 Mbps: 1375 min.

- **Image Sensor:** 1/2.84-in. CMOS sensor, approx. 2,910,000 pixels (2136x1362)
- **OLED Screen:** 3.5 in. organic LED display, equivalent to approx. 1,230,000 dots, 100% coverage
- **Viewfinder:** 0.45 in. color LCD, equivalent to approx. 1,230,000 dots, 99.8% coverage
- **Lens**
  f=3.67-73.4 mm, F/1.8-2.8, 20x optical zoom, 8-bladed circular aperture
  35 mm equivalent: 28.8 – 576 mm♦ (26.8 – 576 mm♦ when the angle of view at full wide-angle is set to [Wider])
- **Lens Configuration:** 12 elements in 10 groups (2 aspheric elements)
- **Filter Diameter:** 58 mm
- **Minimum Focusing Distance**
  60 cm (2 ft.) throughout the zoom range; 1 cm (0.39 in.) (at full wide angle with [Focus Limit] set to [Off])
- **AF System**
  Autofocus (TTL + external distance sensor when the AF [Speed] is set to [High] (Instant AF) or [Medium] (Medium AF)), or manual focus
- **Image Stabilization**
  Optical-Shift Image Stabilizer + digital compensation (Standard IS, Dynamic IS, Powered IS)
- **Subject Illumination (full auto mode set to OFF, frame rate set to 59.94i , gain at 33 dB, shutter speed at 1/4)**
  Minimum Illumination: 0.1 lux
  Illumination Range: 0.1 lux to 10,000 lux
- **ND Filter:** Graduated ND filter, 3 automatic settings (1/2, 1/4, 1/8)
- **Iris:** Automatic or manual
- **Gain**
  -6 dB to 27 dB (3-dB increments), 33 dB; 6.0 dB to 27.0 dB (fine-tuning in 0.5-dB increments)
- **Shutter**
  Automatic, speed (normal increments or fine-tuning), angle, clear scan, slow shutter or off
- **Exposure:** Full automatic ON/OFF; AE shift; 3 light metering modes (standard, spotlight or backlight)
- **White Balance**
  Auto white balance (AWB); two preset settings (daylight, 5,400 K[3] and incandescent lamp, 3,200 K[3]) that can be further fine-tuned; color temperature setting (2,000 K to 15,000 K); custom white balance (two sets, A and B)
  [3] Color temperatures are approximate and given for reference purposes only.
- **Digital zoom:** Digital zoom (120x); digital tele-converter (1.5x, 3.0x, 6.0x)
- **Infrared mode:** Available, including built-in infrared light
- **Microphone:** Stereo electret condenser microphone
- **Size of Photos**
  1920x1080 pixels, 1280x720 pixels (CAMERA mode only)

Wi-Fi

- **Wireless Standard:** IEEE802.11b/g/n (2.4 GHz band), IEEE802.11a/n (5 GHz band)
- **Connection Methods:** Wi-Fi Protected Setup (WPS), search for access points, manual, Camera Access Point
- **Supported Channels:** See the following sidebar.
- **Authentication Methods:** Open, WPA-PSK, WPA2-PSK
- **Encryption Methods:** WEP-64, WEP-128, TKIP, AES

Available frequencies and channels
The camcorder's Wi-Fi functions operate in a predetermined range of frequencies and channels. Note that not all channels may be available for a direct Camera Access Point connection with Wi-Fi-enabled devices.

Frequency	Channels	Available for Camera Access Point connections
2412 MHz to 2462 MHz	1 to 11	Yes
5280 MHz to 5320 MHz	56 to 64	No
5745 MHz to 5805 MHz	149 to 161	Yes

Terminals

- XF205 3G/HD-SDI Terminal
  BNC jack, output only, 0.8 Vp-p / 75 Ω, unbalanced
  3G-SDI: SMPTE 424M, SMPTE ST 425-1
  Video (1080P), embedded audio, time code (VITC/LTC)
  HD-SDI: SMPTE 292-1
  Video (1080i or 720P), embedded audio, time code (VITC/LTC)
- XF205 MON. Terminal
  BNC jack, output only, 0.8 Vp-p / 75 Ω, unbalanced
  HD-SDI: SMPTE 292-1
  Video (1080P, 1080i or 720P), embedded audio, time code (VITC/LTC)
  SD-SDI: SMPTE 259M
  Video (480i), embedded audio, time code (VITC/LTC)
- HDMI OUT Terminal
  HDMI connector, output only, supports 1080/59.94P output
- AV OUT Terminal
  ∅ 3.5 mm stereo mini-jack, output only
  Video: SD composite signal, 1 Vp-p / 75 Ω, unbalanced
  Audio: -10 dBV (47 kΩ load) / 3 kΩ or less, stereo
- INPUT 1, INPUT 2 Terminals
  XLR jack (pin1: shield, pin2: hot, pin3: cold), 2 sets
  Sensitivity
  MIC setting: -60 dBu (manual volume center, full scale -18 dB) / 600 Ω
  LINE setting: 4 dBu (manual volume center, full scale -18 dB) / 10 kΩ
  Microphone attenuator: 20 dB
- MIC Terminal
  ∅ 3.5 mm stereo mini-jack, -72 dBV (manual volume center, full scale -18 dB) / 600 Ω
  Microphone attenuator: 20 dB
- (Headphone) Terminal
  ∅ 3.5 mm stereo mini-jack, -∞ to -12 dBV (16 Ω load, volume range Min to Max) / 50 Ω or less
- XF205 GENLOCK/SYNC OUT Terminal
  BNC jack, input only (GENLOCK setting)/output only (SYNC OUT setting), 1 Vp-p / 75 Ω
- XF205 TIME CODE Terminal
  BNC jack, input/output
  Input: 0.5 Vp-p to 18 Vp-p / 10 kΩ
  Output: 1 Vp-p / 50 Ω

- **LAN Terminal:** Ethernet, 1000BASE-T
- **USB Terminal:** mini-B receptacle, Hi-Speed USB, output only
- **REMOTE Terminal:** Ø 2.5 mm stereo mini-jack

Power/Others

- **Power Supply (rated)**
  7.4 V DC (battery pack), 8.4 V DC (DC IN)
- **Power Consumption (recording MXF clips at 50 Mbps, using autofocus, viewfinder/OLED screen normal brightness, SDI output off)**
  XF200 8.2 W XF205 8.4 W
- **Operating Temperature**
  0 – 40 °C (32 – 104 °F)
- **Dimensions (W x H x D)***
  Camcorder only: 144 x 158 x 264 mm (5.7 x 6.2 x 10.4 in.)
  Camcorder with microphone holder unit, lens hood and eye cup: 160 x 201 x 353 mm (6.3 x 7.9 x 13.9 in.)
  * All dimensions are approximate.
- **Weight (camcorder only)****
  XF200 1,510 g (3.3 lb.) XF205 1,560 g (3.4 lb.)
  **All weights are approximate.

CA-930 Compact Power Adapter

- **Rated input**
  100 – 240 V AC, 50/60 Hz
  As a power adapter: 46 VA (100 V) – 62 VA (240 V)
  As a battery charger: 40 VA (100 V) – 54 VA (240 V)
- **Rated output**
  As a power adapter: 8.4 V DC, 2.4 A
  As a battery charger: 8.4 V DC, 1.5/2.0 A
- **Operating temperature:** 0 – 40 °C (32 – 104 °F)
- **Dimensions (W x H x D):** 85 x 51 x 110 mm (3.3 x 2.0 x 4.3 in.)
- **Weight:** 240 g (8.5 oz.)

BP-955 Battery Pack

- **Battery Type**
  Rechargeable lithium ion battery, compatible with Intelligent System
- **Rated Voltage:** 7.4 V DC
- **Battery Capacity**
  Typical: 5,200 mAh
  Minimum: 37 Wh / 4,900 mAh
- **Operating Temperature:** 0 – 40 °C (32 – 104 °F)
- **Dimensions (W x H x D):** 38.2 x 43.5 x 70.5 mm (1.5 x 1.7 x 2.8 in.)
- **Weight:** 220 g (7.8 oz)

Weight and dimensions are approximate. Errors and omissions excepted.
The information in this manual is verified as of March 2015. Subject to change without notice.

Index

3G/HD-SDI terminal* 162, 163
4-channel audio recording 98, 100

A

Abroad, using the camcorder 231
Accessories 232
AE shift 67
AGC (automatic gain control) 62
AGC limit 63
Air intake vents 54
Angle of view (wide-angle end) 74
Aperture 65
Aspect ratio 165
Assignable buttons 129
Audio output channels 166
Audio peak limiter 106
Audio recording 98
Audio recording level 105, 106
Audio reference signal 107
AV OUT terminal 162, 164
AWB (auto white balance) 70

B

Battery pack 23
    Remaining battery charge 25
Bit rate 55
Browser Remote 44
Built-in backup battery 230

C

Camera settings 143
CameraAccess plus 188
CF card
    Compatible CF cards 38
    Initializing 41
    Inserting/Removing 39
    Recording method 42
    Recovering data 43
    Switching CF card slots 41, 146
Check marks (☑) 110, 152
Clips
    Adding an OK mark/☑ mark 110, 152
    Adding/Deleting shot marks 110, 157
    Copying 153
    Deleting 154
    Displaying clip information 151
    Playback 147
    Recording 47, 123
    Saving to a computer 168
Color bars 107
Condensation 231
Connection to an external monitor 162
Conversion lens 80
Cooling fan 54
Custom displays 142
Custom functions 141
Custom picture 132
Custom picture settings 135

D

Data Import Utility 170
Date and time 27
Date format 204
DC IN terminal 25
Digital tele-converter 74
Direct setting mode 57
Double slot recording 42
Drop frame (time code) 91

E

Edge monitor 109
Exposure compensation 67
Eye cup 33

F

File numbering 117
Flicker reduction 61
Focal length guide 128
Focus 81
    Face AF 85
    Focus assistance functions 84
    PUSH AF (momentary autofocus) 85
Focus limit 86
Frame rate 55
Frame recording mode 119
Free-run (time code) 90

* XF205 only

FTP transfer 189
Full auto mode 49

G

Gain 62
Genlock* 94
GENLOCK terminal* 94
GPS information 114
Grip belt 35
Grip unit 35

H

HDMI OUT terminal 164
Headphone terminal 106
Hour meter 208

I

Image stabilizer 87
Index screens
- Changing clip thumbnail 158
- Clips 145
- Expand clip 156
- Shot marks 155

Infrared light 126
Infrared recording 126
Initializing recording media 41
INPUT 1/INPUT 2 terminals 98, 103
Interval recording mode 118
Iris 65

J

Joystick 29
Joystick guide 148

K

Key lock 48

L

LAN terminal 179
Language 28
Lens hood 32
Light metering mode 68

M

Macro shooting 86
Magnification 84
Menu settings 199
Message list 223
Metadata 111
MIC terminal 98, 101
Microphone 100
Microphone attenuator 104
Microphone holder unit 32, 100
Microphone sensitivity 104, 106
MON. terminal* 162, 163
Monitoring audio 106, 167
Movie format (MXF/MP4) 55
My Menu 30

N

ND filter 67
Network functions 173
Non-drop frame (time code) 91

O

OK marks (OK) 110, 152
OLED screen 34
Onscreen displays 51, 147
Onscreen markers 88

P

Peaking 84
Phantom power (microphone) 103
Photos
- Deleting 198
- Recording 195
- Viewing 197

Playback
- Clips 147
- Photos 197

Playback via Browser 193
Power save mode 54
Power supply 23
POWER switch 26
Powered IS 87
Pre-recording mode 121

R

Real-time proxy transfer 188
Rec run (time code) 90

* XF205 only

Recording
Clips 47
Photos 195
Simultaneous MXF+MP4 recording 123
Relay recording 42
Remote controller 45
Remote operation 44
REMOTE terminal 45
Resetting all camcorder settings 208
Resolution (frame size) 55
Reviewing a recording 116
Running mode (time code) 90

S

Safe area 88
Saving clips to a computer 168
Scan reverse recording 141
SD card
Compatible SD cards 38
Initializing 41
Inserting/Removing 40
Shooting frame rate 120
Shot marks 110, 157
Shoulder strap 36
Shutter speed 58
Slow & fast motion recording mode 120
Specifications 235
Status screens 209
Synchronization* 94

T

Tally lamps 208
Terminal covers 36
Time code 90
Time code synchronization* 95, 96
TIME CODE terminal* 95, 96
Tripod 37
Troubleshooting 218
Turning the camcorder on/off 26

U

USB terminal 171
User bit 93
User memo 111

V

Vectorscope 109
Video configuration 55
Video output configuration 159
Video scopes 108
Viewfinder 34
Volume 149

W

Waveform monitor 108
White balance 69
Wide DR 132, 135
Wireless controller 44

X

XF Utility (download) 168

Z

Zebra pattern 89
Zoom 74
Soft zoom control 79

* XF205 only

USA

CANON PROFESSIONAL DIGITAL VIDEO EQUIPMENT LIMITED WARRANTY FOR PRODUCTS PURCHASED IN THE UNITED STATES

The limited warranty set forth below is given by Canon U.S.A., Inc. ('Canon USA') with respect to Canon Professional Digital Video Equipment (the 'Equipment') packaged with this limited warranty and purchased in the United States. This limited warranty is only effective upon presentation of your Bill of Sale or other proof of purchase. The Equipment is warranted to the original end-user purchaser, when delivered in new condition in its original container, under normal use against defective materials or workmanship as follows:
Parts: Defective parts will be exchanged for new parts or comparable rebuilt parts for a period of ONE YEAR from the date of original purchase.
Labor: For a period of ONE YEAR from the date of original purchase, labor will be provided free of charge by Canon USA's factory service centers or designated service facilities located in the United States.
When returning Equipment under this warranty, you must pre-pay the shipping charges, and you must enclose a copy of the Bill of Sale or other proof of purchase with a complete explanation of the problem. During the ONE-YEAR warranty period, repairs will be made and the Equipment will be return-shipped to you free of charge. For repairs after the warranty period is over, you will be given an estimate of the cost of repair and an opportunity to approve or disapprove of the repair expense before it is incurred. If you approve, repairs will be made and the Equipment will be returned to you at your risk and expense. If you disapprove, we will return-ship the Equipment to you at no charge to you to an address within the United States.

This limited warranty only applies if the Equipment is used in conjunction with compatible computer equipment and compatible software, as to which items Canon USA will have no responsibility. Canon USA shall have no responsibility under this limited warranty for use of the Equipment in conjunction with incompatible peripheral equipment and/or incompatible software. Non-Canon brand peripheral equipment and software which may be distributed with, or factory loaded on, the Equipment, are sold 'AS IS' without warranty of any kind by Canon USA, including any implied warranty regarding merchantability or fitness for a particular purpose. The sole warranty with respect to such non-Canon brand items is given by the manufacturer or producer thereof. If the Equipment contains a hard disk drive, Canon USA recommends that data stored on that drive be duplicated or backed up to prevent its loss in the event of failure or other malfunction of such drive.

In order to obtain warranty service, please contact the authorized Canon retail dealer from whom you purchased the Equipment or contact the CANON INFORMATION CENTER AT **855-CINE-EOS** (855-246-3367) or on the Internet at **pro.usa.canon.com/support**. You will be directed to the nearest service facility for your Equipment.

This Limited Warranty covers all defects encountered in normal use of the Equipment and does not apply in the following cases:

A. Loss or damage to the Equipment due to abuse, mishandling, accident, improper maintenance, use of non-Canon accessories or failure to follow operating, maintenance or environmental instructions prescribed in Canon USA's user's manual;
B. If the Equipment is defective as a result of leaking batteries, sand, dirt or water damage;
C. If defects or damages are caused by the use of parts or supplies (other than those sold by Canon USA) that cause damage to the Equipment or that cause abnormally frequent service calls or service problems;
D. If defects or damages are caused by service other than Canon USA's factory service centers or authorized service facilities;
E. Any internal modification to product hardware or firmware;
F. Any applicable fee for Maintenance of the Equipment;
G. If the Equipment has had its serial number or dating altered or removed.

This Limited Warranty does not apply to Equipment purchased outside the United States. This Limited Warranty does not apply to accessories or consumables for the Equipment, which are sold "AS IS", without warranty of any kind by Canon USA. Please retain this warranty card and your Bill of Sale as a permanent record of your purchase. This card ensures that you are contacted promptly should there be a safety inspection, modification or product recall under applicable laws or regulations.

NO IMPLIED WARRANTY, INCLUDING MERCHANTABILITY AND FITNESS FOR A PARTICULAR PURPOSE APPLIES TO THIS EQUIPMENT AFTER THE APPLICABLE PERIOD OF EXPRESS WARRANTY OR GUARANTY (EXCEPT AS MENTIONED ABOVE) GIVEN BY ANY PERSON, FIRM OR CORPORATION WITH RESPECT TO THIS EQUIPMENT SHALL BIND THE UNDERSIGNED (SOME STATES DO NOT ALLOW LIMITATIONS ON HOW LONG AN IMPLIED WARRANTY LASTS, SO THE ABOVE LIMITATION OR EXCLUSION MAY NOT APPLY TO YOU). CANON USA SHALL NOT BE LIABLE FOR LOSS OF REVENUES OR PROFITS, EXPENSE FOR SUBSTITUTE EQUIPMENT OR SERVICE, STORAGE CHARGES, LOSS OR CORRUPTION OF DATA, INCLUDING WITHOUT LIMITATION, LOSS OR CORRUPTION OF DATA STORED ON THE EQUIPMENT'S HARD DRIVE, OR ANY OTHER SPECIAL, INCIDENTAL OR CONSEQUENTIAL DAMAGES CAUSED BY THE USE, MISUSE OR INABILITY TO USE THE EQUIPMENT, REGARDLESS OF THE LEGAL THEORY ON WHICH THE CLAIM IS BASED, AND EVEN IF CANON USA HAS BEEN ADVISED OF THE POSSIBILITY OF SUCH DAMAGES. NOR SHALL RECOVERY OF ANY KIND AGAINST CANON USA BE GREATER THAN THE PURCHASE PRICE OF THE EQUIPMENT SOLD BY CANON USA AND CAUSING THE ALLEGED DAMAGE. WITHOUT LIMITING THE FOREGOING, YOU ASSUME ALL RISK AND LIABILITY FOR LOSS, DAMAGE OR INJURY TO YOU AND YOUR PROPERTY AND TO OTHERS AND THEIR PROPERTY ARISING OUT OF USE, MISUSE OR INABILITY TO USE THE EQUIPMENT NOT CAUSED DIRECTLY BY THE NEGLIGENCE OF CANON USA (SOME STATES DO NOT ALLOW THE EXCLUSION OR LIMITATION OF INCIDENTAL OR CONSEQUENTIAL DAMAGES, SO THE ABOVE LIMITATION MAY NOT APPLY TO YOU).THIS WARRANTY SHALL NOT EXTEND TO ANYONE OTHER THAN THE ORIGINAL PURCHASER OF THIS EQUIPMENT OR THE PERSON FOR WHOM IT WAS PURCHASED AS A GIFT.

This warranty gives you specific legal rights, and you may also have other rights which vary from state to state.

CANON U.S.A., INC.

CANADA

CANON PROFESSIONAL DIGITAL VIDEO EQUIPMENT LIMITED WARRANTY FOR PRODUCTS PURCHASED IN CANADA

The limited warranty set forth below is given by Canon Canada Inc. ('Canon Canada') with respect to Canon Professional Digital Video Equipment (the 'Equipment') packaged with this limited warranty and purchased in Canada. This limited warranty is only effective upon presentation of your Bill of Sale or other proof of purchase. The Equipment is warranted to the original end-user purchaser, when delivered in new condition in its original container, under normal use against defective materials or workmanship as follows:
Parts: Defective parts will be exchanged for new parts or comparable rebuilt parts for a period of ONE YEAR from the date of original purchase.
Labor: For a period of ONE YEAR from the date of original purchase, labor will be provided free of charge by Canon Canada's factory service center or designated service facilities located in Canada.
When returning Equipment under this warranty, you must pre-pay the shipping charges, and you must enclose a copy of the Bill of Sale or other proof of purchase with a complete explanation of the problem. During the ONE-YEAR warranty period, repairs will be made and the Equipment will be return-shipped to you free of charge. For repairs after the warranty period is over, you will be given an estimate of the cost of repair and an opportunity to approve or disapprove of the repair expense before it is incurred. If you approve, repairs will be made and the Equipment will be returned to you at your risk and expense. If you disapprove, we will return-ship the Equipment to you at no charge to you to an address within Canada.

This limited warranty only applies if the Equipment is used in conjunction with compatible computer equipment and compatible software, as to which items Canon Canada will have no responsibility. Canon Canada shall have no responsibility under this limited warranty for use of the Equipment in conjunction with incompatible peripheral equipment and/or incompatible software. Non-Canon brand peripheral equipment and software which may be distributed with, or factory loaded on, the Equipment, are sold 'AS IS' without warranty of any kind by Canon Canada, including any implied warranty or condition regarding merchantability or fitness for a particular purpose. The sole warranty with respect to such non-Canon brand items is given by the manufacturer or producer thereof. If the Equipment contains a hard disk drive, Canon Canada recommends that data stored on that drive be duplicated or backed up to prevent its loss in the event of failure or other malfunction of such drive.

In order to obtain warranty service, please contact the authorized Canon retail dealer from whom you purchased the Equipment or contact the CANON PROFESSIONAL SERVICE CENTRE 1-800-667-2666 or on the Internet at **www.canon.ca/pro**. You will be directed to the nearest service facility for your Equipment.

This Limited Warranty covers all defects encountered in normal use of the Equipment and does not apply in the following cases:

A. Loss or damage to the Equipment due to abuse, mishandling, accident, improper maintenance, use of non-Canon accessories or failure to follow operating, maintenance or environmental instructions prescribed in Canon Canada's user's manual;
B. If the Equipment is defective as a result of leaking batteries, sand, dirt or water damage;
C. If defects or damages are caused by the use of parts or supplies (other than those sold by Canon Canada) that cause damage to the Equipment or that cause abnormally frequent service calls or service problems;
D. If defects or damages are caused by service other than Canon Canada's factory service centers or authorized service facilities;
E. Any internal modification to product hardware or firmware;
F. Any applicable fee for Maintenance of the Equipment;
G. If the Equipment has had its serial number or dating altered or removed.

This Limited Warranty does not apply to Equipment purchased outside Canada. This Limited Warranty does not apply to accessories or consumables for the Equipment, which are sold "AS IS", without warranty of any kind by Canon Canada. Please retain this warranty card and your Bill of Sale as a permanent record of your purchase. This card ensures that you are contacted promptly should there be a safety inspection, modification or product recall under applicable laws or regulations.

NO IMPLIED WARRANTY OR CONDITION, INCLUDING MERCHANTABILITY AND FITNESS FOR A PARTICULAR PURPOSE APPLIES TO THIS EQUIPMENT AFTER THE APPLICABLE PERIOD OF EXPRESS WARRANTY OR GUARANTY (EXCEPT AS MENTIONED ABOVE) GIVEN BY ANY PERSON, FIRM OR CORPORATION WITH RESPECT TO THIS EQUIPMENT SHALL BIND THE UNDERSIGNED (SOME PROVINCES DO NOT ALLOW LIMITATIONS ON HOW LONG AN IMPLIED WARRANTY OR CONDITION LASTS, SO THE ABOVE LIMITATION OR EXCLUSION MAY NOT APPLY TO YOU). CANON CANADA SHALL NOT BE LIABLE FOR LOSS OF REVENUES OR PROFITS, EXPENSE FOR SUBSTITUTE EQUIPMENT OR SERVICE, STORAGE CHARGES, LOSS OR CORRUPTION OF DATA, INCLUDING WITHOUT LIMITATION, LOSS OR CORRUPTION OF DATA STORED ON THE EQUIPMENT'S HARD DRIVE, OR ANY OTHER SPECIAL, INCIDENTAL OR CONSEQUENTIAL DAMAGES CAUSED BY THE USE, MISUSE OR INABILITY TO USE THE EQUIPMENT, REGARDLESS OF THE LEGAL THEORY ON WHICH THE CLAIM IS BASED, AND EVEN IF CANON CANADA HAS BEEN ADVISED OF THE POSSIBILITY OF SUCH DAMAGES. NOR SHALL RECOVERY OF ANY KIND AGAINST CANON CANADA BE GREATER THAN THE PURCHASE PRICE OF THE EQUIPMENT SOLD BY CANON CANADA AND CAUSING THE ALLEGED DAMAGE. WITHOUT LIMITING THE FOREGOING, YOU ASSUME ALL RISK AND LIABILITY FOR LOSS, DAMAGE OR INJURY TO YOU AND YOUR PROPERTY AND TO OTHERS AND THEIR PROPERTY ARISING OUT OF USE, MISUSE OR INABILITY TO USE THE EQUIPMENT NOT CAUSED DIRECTLY BY THE NEGLIGENCE OF CANON CANADA (SOME PROVINCES DO NOT ALLOW THE EXCLUSION OR LIMITATION OF INCIDENTAL OR CONSEQUENTIAL DAMAGES, SO THE ABOVE LIMITATION MAY NOT APPLY TO YOU). THIS WARRANTY SHALL NOT EXTEND TO ANYONE OTHER THAN THE ORIGINAL PURCHASER OF THIS EQUIPMENT OR THE PERSON FOR WHOM IT WAS PURCHASED AS A GIFT.

This warranty gives you specific legal rights, and you may also have other rights which vary from province to province.

CANON CANADA INC.

Canon

Canon Inc. 30-2, Shimomaruko 3-chome, Ohta-ku, Tokyo 146-8501, Japan

ASIA and HONG KONG, S.A.R.
Canon Hongkong Company Ltd
19/F, The Metropolis Tower, 10 Metropolis Drive,
Hunghom, Kowloon, Hong Kong
+852 3191 2333, +852 2428 3963

CANADA http://www.canon.ca/pro
CANON CANADA INC.
❖ Professional Product Support /
Soutien des produits professionnels
(800) 667-2666

CENTRO Y SURAMÉRICA http://www.cla.canon.com
CANON LATIN AMERICA, INC.

MÉXICO http://www.canon.com.mx
CANON MEXICANA, S DE RL DE CV
52 (55) 5249-4905

USA
CANON U.S.A., INC. http://pro.usa.canon.com
http://pro.usa.canon.com/support
(855) CINE-EOS (855-246-3367)
(USA only)

- Visit your local Canon Web site to download the latest version of this Instruction Manual.
- Consultez votre site Web Canon local pour télécharger la version la plus récente de ce manuel d'instructions.
- Para descargar la última versión de este manual de instrucciones, visite nuestro sitio web local de Canon.

© CANON INC. 2015

PUB. DIM-1104-000C

DIM1104000