Canon

Large Format Printer

imagePROGRAF

iPF780 Series

Basic Guide

Preface

⚠Safety Precautions 2
Manuals for this printer 6

Handling Paper

Handling rolls 12
Handling sheets 21

Consumables and Maintenance

Ink Tanks 25
Printheads 30
Maintenance Cartridge 37
Cleaning the Printer 42

Printer Parts

Operations and Display Screen 46
Printer parts 57

Printer Relocation

Preparing to Transfer the Printer 62

Software Installation

Installing the Printer Driver (Windows) 69
Installing the Printer Driver (Mac OS) 71
Convenient Printer Driver Features 73

Adjustments for Better Print Quality

Adjusting the Printhead 79
Adjusting the feed amount 81

Troubleshooting

Problems Regarding Paper 84
Printing does not start 94
The printer stops during a print job 95
Problems with the printing quality 96
Cannot print over a network 103
Installation problems 104
HP-GL/2 problems 106
Other problems 108

Error Message

Messages regarding paper 112
Messages regarding ink 121
Messages regarding printing or adjustment 123
Messages regarding printheads 124
Messages regarding the maintenance cartridge 126
Messages regarding HP-GL/2 127
Other Messages 128
Error Messages 130

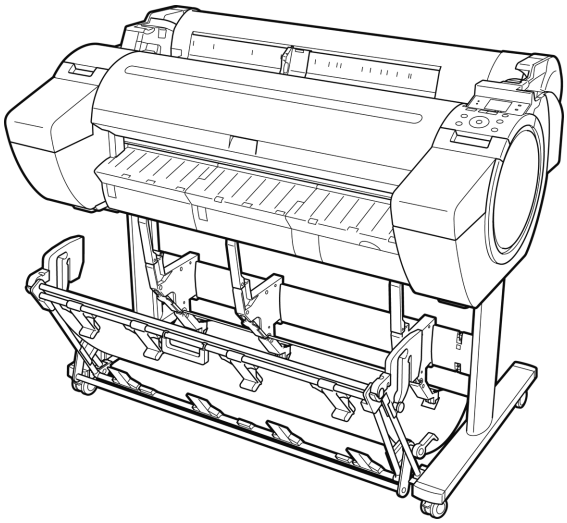

Manuals for this printer

- Setup Guide
- Quick Guide
- Basic Guide — Electronic manual
- User's Guide — Electronic manual
- Paper Reference Guide — Electronic manual

Read this manual before attempting to operate the printer.
Keep this manual in a handy location for future referencing.

ENG

ver1.00 2013-11-28

Preface

Safety Precautions

Safety Precautions 2
Legal Notices 4

Safety Precautions

Follow the warnings and precautions below to use the printer safely. Do not perform any operations or procedures other than as described in this manual. Doing so may result in unexpected accidents and can cause a fire or electrical shocks.

Printer location

Warning

- Do not set up the printer in any location exposed to alcohol, thinner, or other volatile liquids. If these substances come into contact with electrical components inside the printer, there is a risk of fire or electrical shock.

Caution

- Never install the printer on an unstable or vibrating surface. If it falls over, this could cause personal injury.
- Never set up the printer in a location that is exposed to high humidity or large amounts of dust, or exposed to direct sunlight, high temperature, or open flame. This could cause a fire or electrical shock. Use the printer location in an environment where temperature and humidity are within the ranges of 15 °C to 30 °C (59 °F to 86 °F) and 10 to 80% RH (with no condensation).
- Never place the printer on a heavy wool or shag carpet. The fibers may enter the printer and cause a fire.
- Keep the area around the power outlet clear of items so that you can disconnect the power cable immediately if the printer starts operating abnormally. In the event of a printer malfunction, remove the power cable from the outlet as soon as possible to prevent fire and electrical shocks.
- Do not install the printer near sources of strong electromagnetic fields, whether equipment that generates such fields or places where such fields occur. This could damage the printer or cause malfunction.

Power Supply

Warning

- Never handle the power cable with wet hands. Doing so may cause electrical shock.
- Insert the power cable securely and completely into the power source. If the power cable is not inserted completely, this could cause a fire or electrical shock.
- Do not use any power cable other than the one provided. This could cause a fire or electrical shock. Never use the power cable with any other electrical device.
- Never cut the power cable or attempt to modify it, and never stretch it or bend it forcefully. Never place a heavy object on the power cable. Damaged sections of the power cable could cause a short circuit and may cause a fire or electrical shock.
- Never connect the power cable to a power strip or any power source shared by other electrical devices. This could cause a fire or electrical shock.
- Never knot the power cable or wrap it around itself. This could cause a fire or electrical shock.
- Periodically disconnect the power cable and use a dry cloth to wipe away dust that has collected on the plug and the area around the power outlet. Leaving the power cable plugged in and not cleaned for a long period, especially in an area subject to dust, oil, and humidity, could cause the insulation material to deteriorate and lead to a fire.

Caution

- Always grip the plug to remove the power cable from the power outlet. Pulling on the power cable could damage the cable and lead to a fire or electrical shock.
- Never use an extension cord. This could cause a fire or electrical shock.
- Never use any power source other than 100–120 / 220–240 V AC. This could cause a fire or electrical shock. The printer operating conditions are described below. Use the printer under the following conditions.
  Power supply voltage: 100–120 / 220–240 V AC
  Power supply frequency: 50/60 Hz

In an Emergency

Warning

- If the printer emits smoke or strange odors, continuing to use the printer may cause a fire or electrical shock. Switch the printer off immediately and remove the power plug from the power outlet. Contact your Canon dealer or support center.

Cleaning the Printer

Warning

- For cleaning, use a cloth dampened in water. Never use flammable solvents such as alcohol, benzene, or thinner. If these substances come into contact with electrical components inside the printer, there is a risk of fire or electrical shock.

Caution

- Always disconnect the power cable from the outlet before cleaning the printer. If the printer is switched on accidentally, moving parts inside the printer may cause personal injuries.

Pacemakers

Warning

- This printer generates a low-level magnetic field. Anyone wearing a pacemaker who experiences discomfort while working around the printer should leave the area. Consult a physician before continuing to work around the printer.

Moving the Printer

Caution

- Moving the printer requires at least three people, holding it on both sides and from behind. Be careful to avoid back strain and other injuries.
- When moving the printer, firmly grasp the Carrying Handles under each side and in back. The printer may be unsteady if you hold it at other positions, which poses a risk of injury from dropping the printer.

Printhead, Ink Tanks, and Maintenance Cartridge

Caution

- Always store consumables in a safe location out of the reach of small children. If a child licks or ingests ink accidentally, seek medical assistance immediately.
- If ink accidentally gets in your eyes, immediately rinse with water.
  If ink gets on your skin, immediately clean it off with soap and water.
  If irritation persists in your eyes or on your skin, contact a physician immediately.
- Avoid dropping or shaking printheads, ink tanks, and maintenance cartridges. Spilled ink can stain clothing and the work area.
- Never touch the electrical contacts of the Printhead after printing. The contacts become extremely hot and can cause minor burns.

Other

Warning

- Never disassemble the printer or attempt repairs. There are high voltage parts inside the printer that can cause a fire or electrical shock.
- Never use flammable sprays around the printer. The gas of flammable sprays can cause a fire or electrical shock, if it contacts high voltage points inside the printer.
- Never touch the cutting edge of Cutter Unit (a). This could cause personal injury.

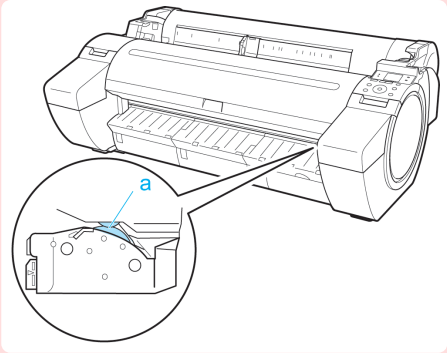

Caution

- Never insert your hand into the printer while it is printing. Moving parts inside the printer can cause injuries.
- Never place anything on the printer such as small metal objects (paper clips, staples), liquids, any type of liquid container that contains flammable liquids (alcohol, benzene, etc.). If such objects fall into the printer, this could cause a fire or electrical shock.
- To prevent a fire hazard or dangerous electric shock, if a foreign object falls into or a liquid spills into the printer, press the Power button immediately to switch the printer off, unplug the printer power cable from the outlet, and then contact your Canon dealer or support center. If you continue to use the printer, this could cause a fire or electrical shock.

Important

- Connect the interface cable correctly. To avoid damage, before connection make sure that the shape of the cable connector matches the connection point on the printer.
- During printing, turn on the ventilation system in the room.
- We recommend ensuring ample space for installation.

Legal Notices

FCC Regulations (U.S.A)

Canon Large Format Printer	iPF780

This device complies with Part 15 of the FCC Rules. Operation is subject to the following two conditions: (1) This device may not cause harmful interference, and (2) this device must accept any interference received, including interference that may cause undesired operation.

Note: This equipment has been tested and found to comply with the limits for class B digital device, pursuant to Part 15 of the FCC Rules. These limits are designed to provide reasonable protection against harmful interference in a residential installation.
This equipment generates, uses and can radiate radio frequency energy and, if not installed and used in accordance with the instructions, may cause harmful interference to radio communications.However, there is no guarantee that interference will not occur in a particular installation. If this equipment does cause harmful interference to radio or television reception, which can be determined by turning the equipment off and on, the user is encouraged to try to correct the interference by one or more of the following measures:

- Reorient or relocate the receiving antenna.
- Increase the separation between the equipment and receiver.

- Connect the equipment into an outlet on a circuit different from that to which the receiver is connected.
- Consult the dealer or an experienced radio/TV technician for help.

Use of shielded cable is required to comply with Class B limits in Subpart B of Part 15 of FCC Rules.
Do not make any changes or modifications to the equipment unless otherwise specified in the manual.
If such changes or modifications should be made, you could be required to stop operation of the equipment.
Canon U.S.A. Inc.
One Canon Park Melville, NY 11747 , U.S.A.
Tel No. 1-800-652-2666

For CA, USA Only

Included battery contains Perchlorate Material - special handling may apply.
See http://www.dtsc.ca.gov/hazardouswaste/perchlorate/ for detail.

Trademarks

- Canon, the Canon logo, and imagePROGRAF are trademarks or registered trademarks of CANON INC.
- Microsoft is a registered trademark of Microsoft Corporation.
- Windows is a trademark or registered trademark of Microsoft Corporation in the U.S. and/or other countries.
- Mac, Mac OS, Bonjour and OS X are trademarks of Apple Inc., registered in the U.S. and other countries.
- Adobe RGB, a trademark of Adobe Systems Incorporated, is color space proposed by Adobe Systems Incorporated.

Copyright

- Unauthorized reproduction of this user manual in whole or part is prohibited.

Legal Notice

- It is illegal to reproduce currency, bills, negotiable securities and other documents prohibited by law. Reproduction of such items may be subject to criminal prosecution.
- It is illegal to reproduce legal certificates, licenses, travel tickets, and certain public and private documents prohibited from reproduction by law. Reproduction of such items may be subject to criminal prosecution.
- Please note that intellectual property protected by copyright may not be reproduced without the express permission of the copyright holder except for personal or household use under limited circumstances.

Manuals for this printer

Manuals for this printer 6
To view the User's Guide or Paper Reference Guide 6
About This User Manual 10

Manuals for this printer

This printer has the following manuals.

Name	Contents	Medium
Setup Guide	Instructions for unpacking and setting up the printer, and for installing the software and electronic manuals.	Printed Manuals
Quick Guide	Contains information such as a guide to exchanging paper, Ink Tank, and Printhead, and cautions for using the product safely.	
Basic Guide	Descriptions of basic printer operations.	Electronic manuals
User's Guide	Detailed instructions for using the printer.	
Paper Reference Guide	This guide describes about the types and specifications of the available media on the printer.	

Setup Guide	Quick Guide	Basic Guide	User's Guide	Paper Reference Guide
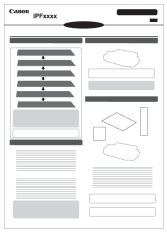	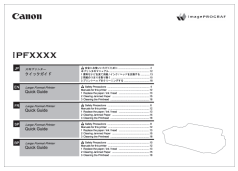			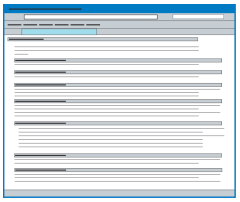

To view the User's Guide or Paper Reference Guide

To view the User's Guide or Paper Reference Guide, display the various manuals on the website from the links in the software installed on your computer.

- Windows

  The basic instructions for displaying the User's Guide or Paper Reference Guide from the printer driver are as follows.

1 Install the software.
Note that the driver installation procedure varies depending on the type of connection.
(See "Installing the Software (Windows).") ➔P.69

2 Click **start** > **Printers and Faxes** (or **Printer**, **Devices and Printers**).

3 Right-click the printer, and then click **Properties** (or **Printer Properties**).

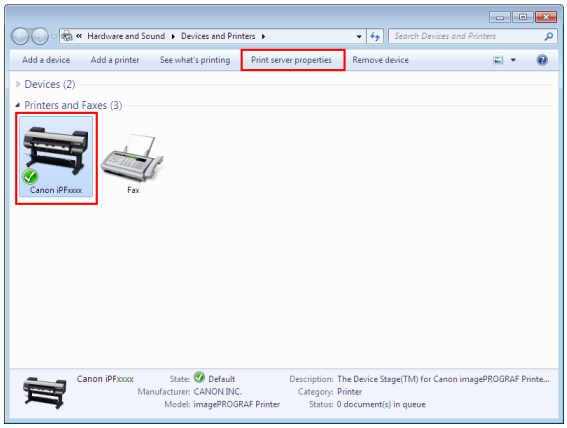

4 Click **Preferences** (or **Printing Preferences**) to display the **Printing Preferences** dialog box with the printer name added to the title.

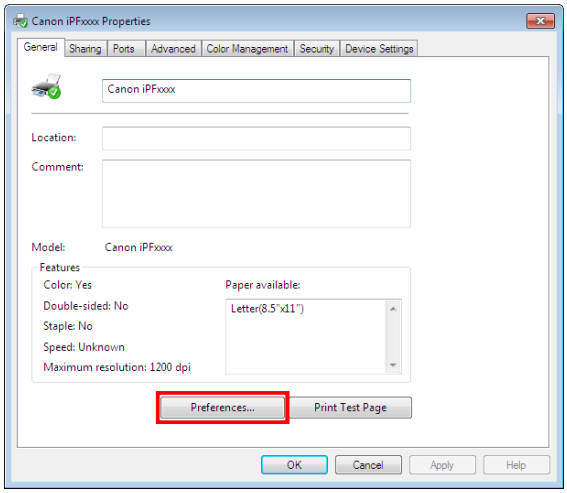

5 Select the **Support** sheet and click the **User Manual** button.

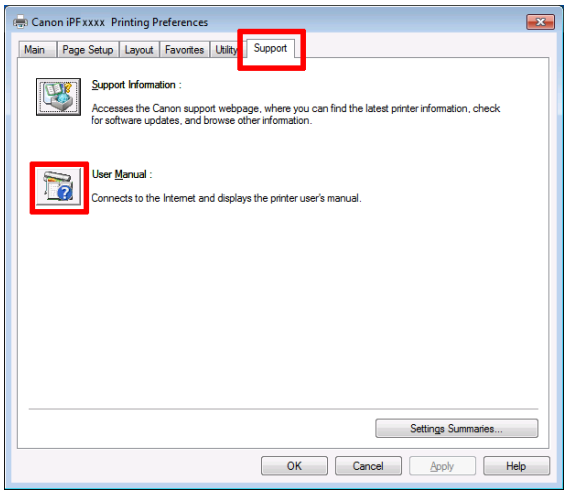

6 To display User's Guide, click **User's Guide**. Alternately, to display Paper Reference Guide, click **Paper Reference Guide**.

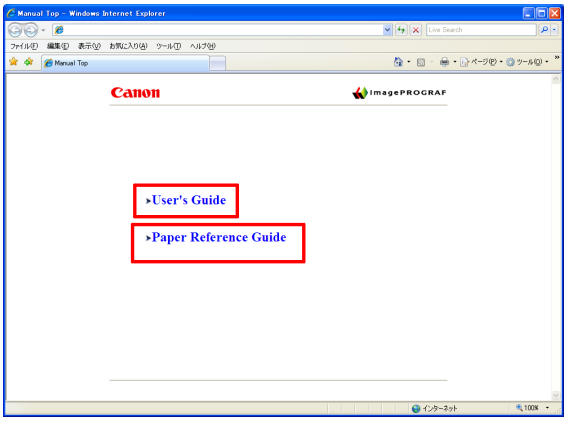

- Mac OS

The basic instructions for displying the User's Guide or Paper Reference Guide from imagePROGRAF Print-monitor are as follows.

1 Install the software.
(See "Installing the Software (Mac OS).") ➔P.71

2 Click **System Preferences** icon in the **Dock**.

3 Click **Printers & Scanners** (**Print & Scan** or **Print & Fax**).

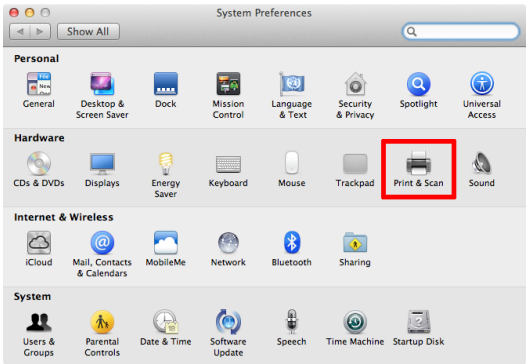

4 Select the printer in the Printer list and click **Options & Supplies**.

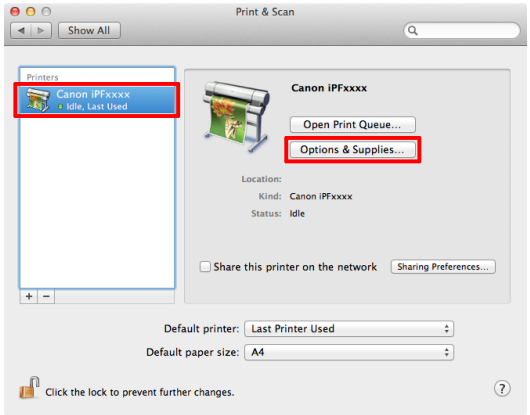

5 Click **Utility**.

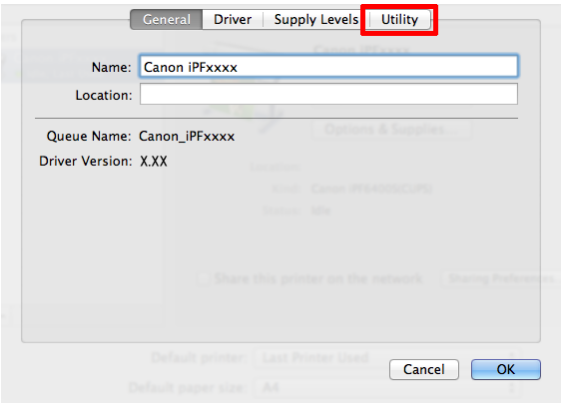

6 Click **Open Printer Utility**.

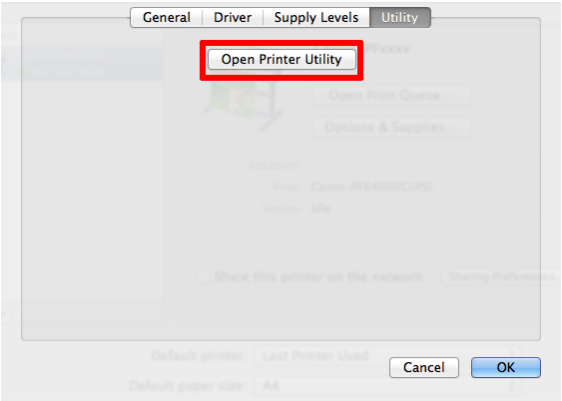

7 Click **Support**.

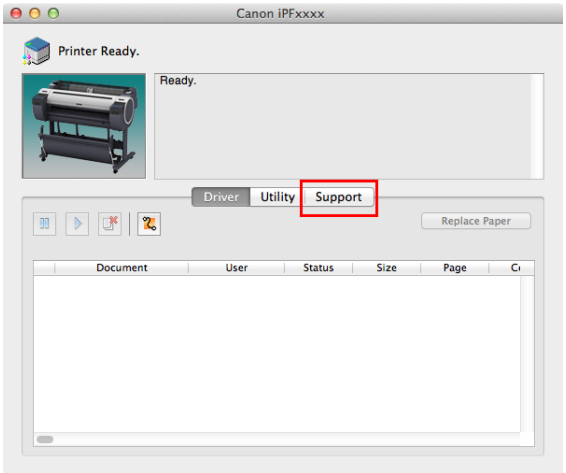

8 Click the **User Manual** button.

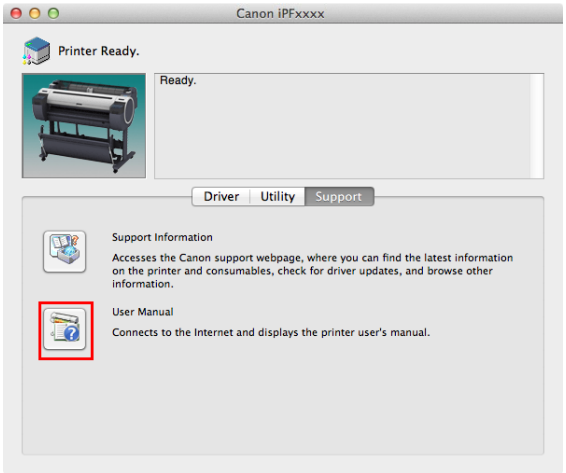

9 To display User's Guide, click **User's Guide**. Alternately, to display Paper Reference Guide, click **Paper Reference Guide**.

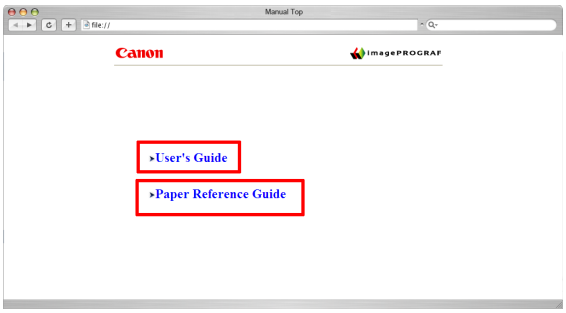

About This User Manual

- Symbols

The following symbols are used in this user manual to indicate safety information and explanations on restrictions or precautions in use.

⚠	Warning	Indicates warning items for which operating error poses a risk of death or serious injury. To ensure safe use, always follow these warnings.

	Caution	Indicates caution items for which operating error poses a risk of injury. To ensure safe use, always follow these cautions.
	Important	Indicates important information and restrictions that definitely are to be followed during operation. Be sure to read this information to prevent troubles, malfunctions, or damage to equipment or property by operating errors.
	Note	Indicates helpful reference information and supplemental information on particular topics.

- Button names and user interface elements

Key and button names on the control panel and user interface elements in software (such as menus and buttons) are indicated as follows in this user manual.

Control panel buttons	Example: Press the **OK** button.
Control panel messages	Example: **Head Cleaning** is displayed.
Software interface items (menus and buttons)	Example: Click **OK**.
Keyboard keys	Example: Press the Tab key.

- Cross-reference

Other pages or manuals that provide related information are indicated as follows in this user manual.

Cross-reference in the same user manual	Example: see "Menu Structure." →P.51
Cross-reference in related manuals	Example: Refer to the Paper Reference Guide.
Other cross-reference	Example: See the printer driver help.

- Figures and software screens
  - Figures in this user manual may be different from the actual appearance of the printer in some cases.
  - Screens depicted in this user manual for the printer driver or other software may be different from the actual screens because of subsequent updates.
- May we request
  - The information in this user manual is subject to change without notice.
  - We strive to ensure accuracy of information in this user manual, but if you notice errors or omissions, contact support center.

Handling Paper

Handling rolls

Attaching the Roll Holder to Rolls 12
Loading Rolls in the Printer 15
Removing the Roll from the Printer 18

Attaching the Roll Holder to Rolls

When printing on rolls, attach the Roll Holder to the roll.
Rolls have a two- or three-inch paper core. Use the correct attachment for the paper core. The printer comes equipped with the 2-Inch Paper Core Attachment installed.

Using Rolls with a 2-Inch Paper Core		Using Rolls with a 3-Inch Paper Core	
Holder Stopper (Left Side)	Roll Holder (Right Side)	Holder Stopper (Left Side)	Roll Holder (Right Side)
2-Inch Paper Core Attachment 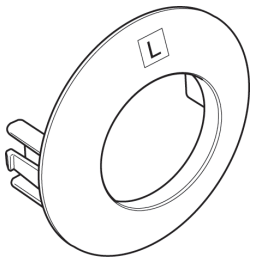	No Attachment Needed	3-Inch Paper Core Attachment L 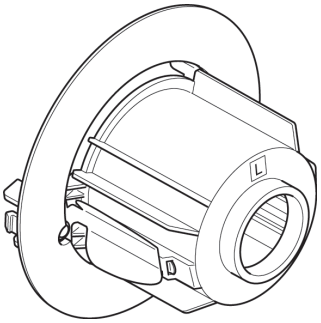	3-Inch Paper Core Attachment R 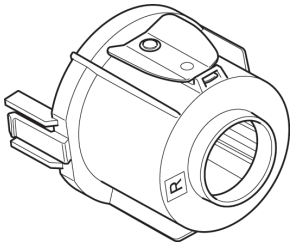

Caution
- Set the roll on a table or other flat surface so that it does not roll or fall. Rolls are heavy, and dropping a roll may cause injury.

Important
- When handling the roll, be careful not to soil the printing surface. This may affect the printing quality. We recommend wearing clean cloth gloves when handling rolls to protect the printing surface.
- Use scissors or a cutting tool to cut the edge of the roll paper if it is uneven, dirty, or has tape residue. Otherwise, it may cause feeding problems and affect the printing quality. Be careful not to cut through any barcodes printed on the roll.
- Align the edges of the paper on both ends of the roll. Misalignment may cause feeding problems.

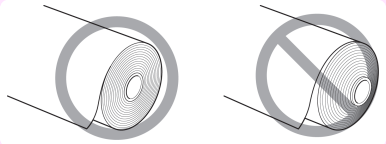

Note
- For details on supported sizes and types of rolls, see **Paper Sizes** or the **Paper Reference Guide**. (See "Paper Sizes.") ➔User's Guide (See "Displaying the Paper Reference Guide.") ➔User's Guide
- To view instructions as you attach the Roll Holder, press the **Navigate** button. (See "How to View Instructions with Navigate.") ➔User's Guide

1 Lift the Holder Stopper lever (a) from the shaft side to unlock it. Holding the Holder Stopper at the position indicated (b), remove it from the Roll Holder.

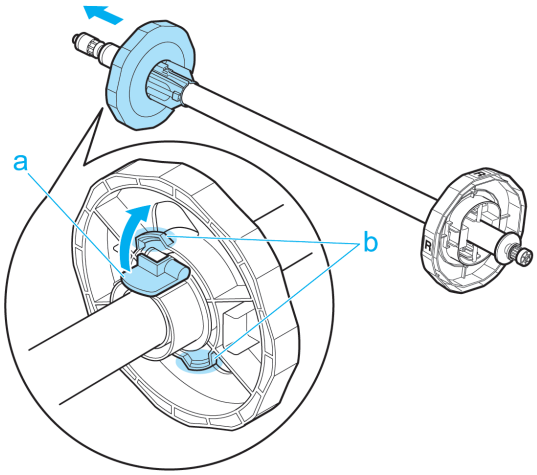

2 Insert the respective attachments for the roll paper core on the Roll Holder and Holder Stopper.

- Using rolls with a 2-inch paper core

Holder Stopper (Left Side)	Roll Holder (Right Side)
Align the tips (a) of the 2-Inch Paper Core Attachment with the holes (b) of the Holder Stopper and insert it firmly. 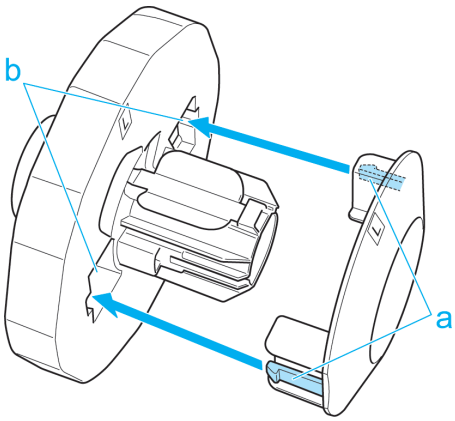	No attachment is needed.

- Using rolls with a 3-inch paper core

Holder Stopper (Left Side)	Roll Holder (Right Side)
Align the tips (a) of the 3-Inch Paper Core Attachment L with the holes (b) of the Holder Stopper and insert it firmly. 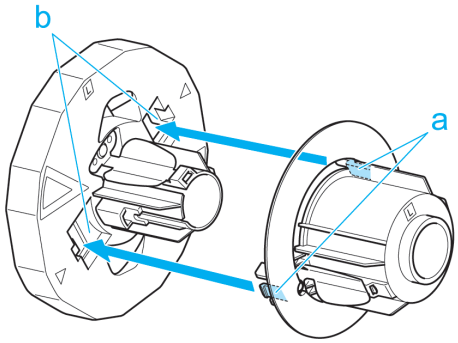	Align the tips (a) of 3-Inch Paper Core Attachment R with the holes (b) of the Roll Holder and insert it firmly. 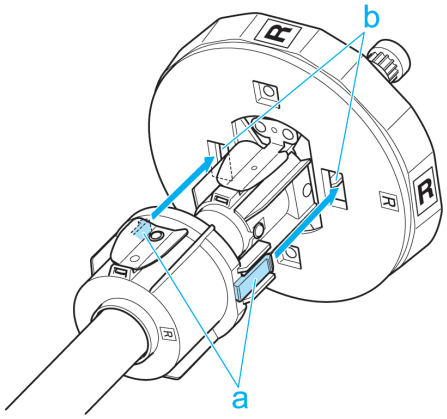

3 With the edge of the roll paper facing forward as shown, insert the Roll Holder from the right of the roll. Insert it firmly until the roll touches the flange (a) of the Roll Holder, leaving no gap.

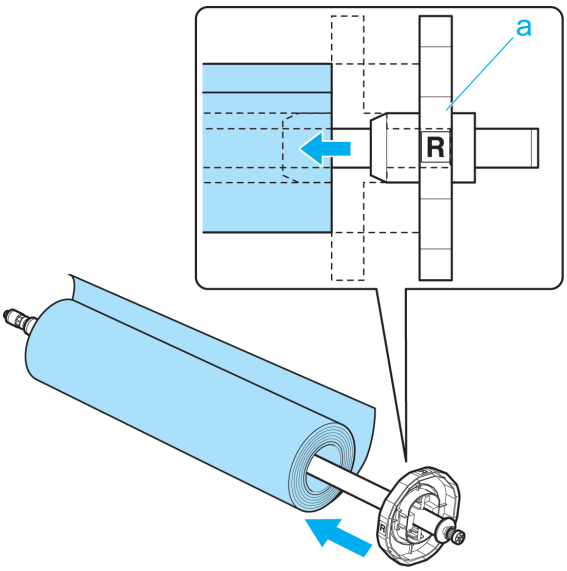

4 Insert the Holder Stopper from the left in the Roll Holder as shown. Holding it at the position shown (b), push it firmly in until the flange (a) of the Holder Stopper touches the roll. Lock the Holder Stopper lever (c) by pushing it down toward the shaft side.

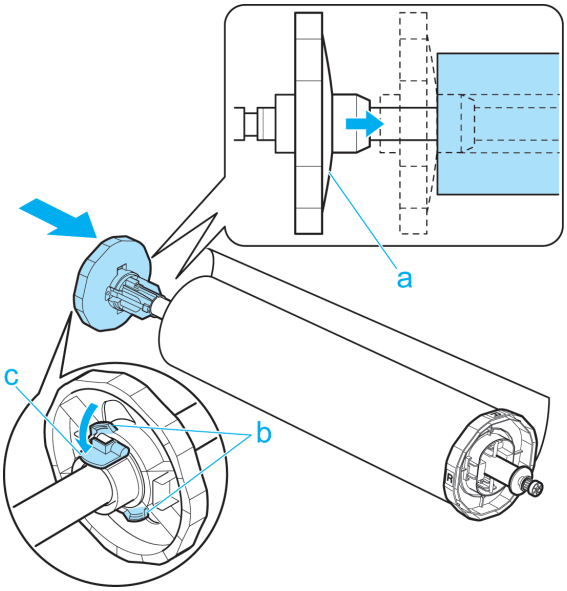

Loading Rolls in the Printer

Follow these steps to load rolls in the printer.

Note
- Before loading rolls, make sure the printer is clean inside the Top Cover and around the Ejection Guide. If these areas are dirty, we recommend cleaning them in advance. (See "Cleaning Inside the Top Cover.") ➔P.42

1 Press the **Load** button.

2 Press ▲ or ▼ to select "**Load Roll Paper**", and then press the **OK** button.

Note
- If any paper has been advanced that will not be used, a message is shown requesting you to remove it. Press ▲ or ▼ to select **Yes**, and then press the **OK** button. Remove the paper and go to the next step.

3 Positioning your hands as shown, open the Roll Cover.

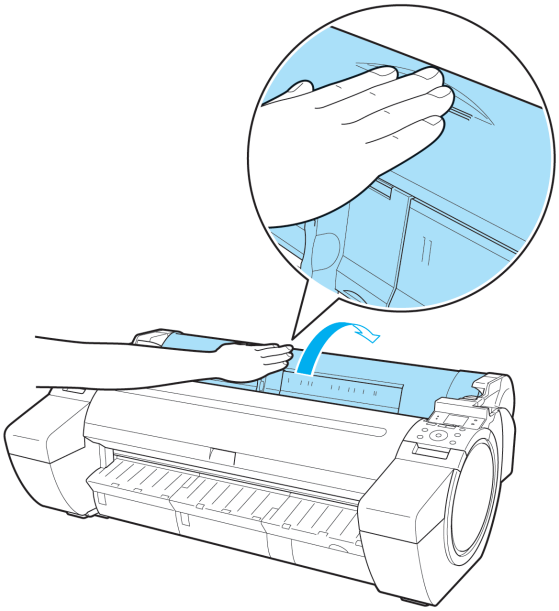

4 Holding the Roll Holder flange (a), rest the Roll Holder shaft on the Roll Ledge (b).
At this time, position the holder so that the **R** label (c) on the [W label (c) on the Roll Holder flange is aligned with the **R** label (d) on the printer .

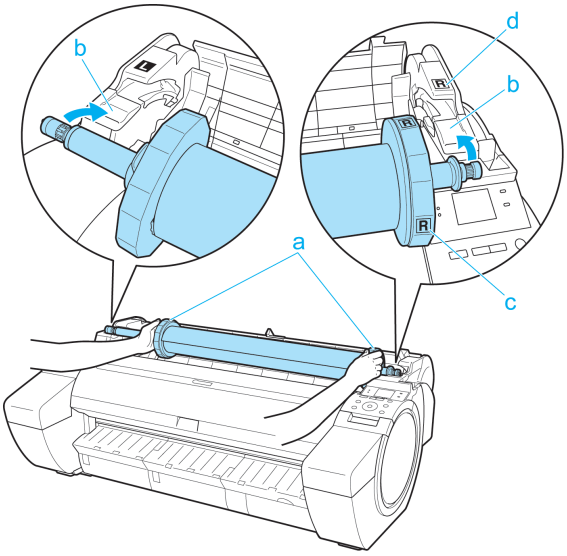

5 Holding the Roll Holder flange (a), guide the holder along the Roll Loading Slots (b) on both ends, keeping the holder level as you load it in the Roll Holder Slot.

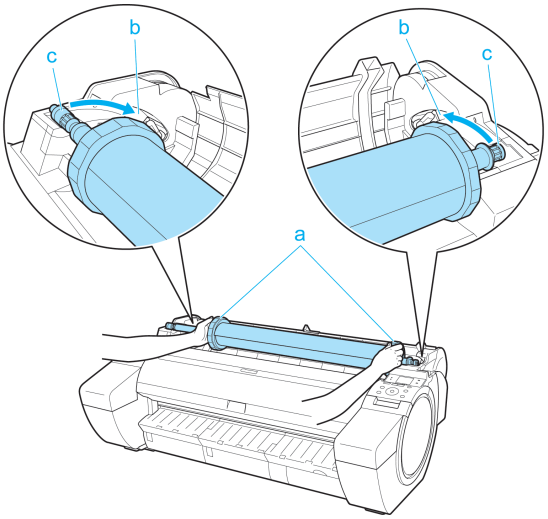

Caution

- Do not force the Roll Holder into the printer with the right and left ends reversed. This may damage the printer and Roll Holder.
- Do not release the flanges until the holder is loaded in the Roll Holder Slot.
- Be careful not to pinch your fingers between the Roll Loading Slots (b) and the Roll Holder shaft (c) when loading rolls.

6 Advance the roll to insert the leading edge in the Paper Feed Slot (a) until you hear a tone.

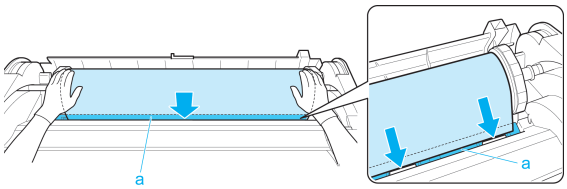

Important

- Be careful not to soil the printing surface of roll paper as you insert it in the slot. This may affect the printing quality. We recommend wearing clean cloth gloves when handling rolls to protect the printing surface.
- If the paper is wrinkled or warped, straighten it out before loading it.
- Load paper straight so it is not fed askew.

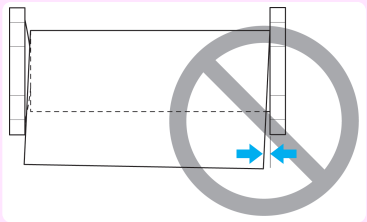

7 Once paper feeding starts, you will need to do the following, based on the **ManageRemainRoll** setting and the barcode printed on rolls. (See "Keeping Track of the Amount of Roll Paper Left.") ➔User's Guide

ManageRemainRoll	Barcodes	Printer Operation After the Paper is Fed
Off	Printed	A menu for selection of the type of paper is automatically shown on the Display Screen. Press ▲ or ▼ to select the type of paper, and then press the **OK** button.
	Not printed	
On	Printed	The type and amount of paper left is automatically detected based on the barcode printed on the roll. There is no need to specify the type and length of the paper.

ManageRemainRoll	Barcodes	Printer Operation After the Paper is Fed
On	Not printed	A menu for selection of the paper type and length is automatically shown on the Display Screen. Press ▲ or ▼ to select the type and length of paper loaded, and then press the **OK** button.

Note
- For details on types of paper to select, see the **Paper Reference Guide**. (See "Displaying the Paper Reference Guide.") ➔User's Guide

8 Holding it at the positions indicated, close the Roll Cover.

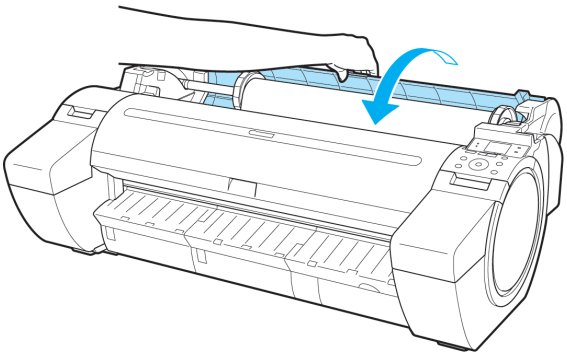

Note
- Cut the edge of the roll after the paper is advanced if it is soiled or if there are cuts from scissors or the blade after removing creased edges. (See "Specifying the Cutting Method for Rolls.") ➔User's Guide

Removing the Roll from the Printer

Remove rolls from the printer as follows.

Note
- If you need to cut the roll, see "Specifying the Cutting Method for Rolls." ➔User's Guide

1 On the **Tab Selection screen** of the Control Panel, press ◀ or ▶ to select the Paper tab ( ).

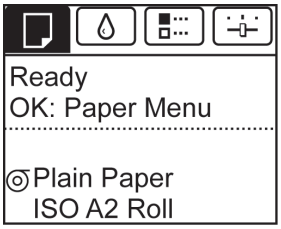

Note
- If the **Tab Selection screen** is not displayed, press the **Menu** button.

2 Press the **OK** button.
The **Paper Menu** is displayed.

3 Press ▲ or ▼ to select **Eject Paper**, and then press the **OK** button.

4 Press ▲ or ▼ to select **Yes**, and then press the **OK** button.
The roll is now rewound and ejected.

Caution

- If you have selected **ManageRemainRoll** > **On** in the Control Panel menu, a barcode is printed on the leading edge of the roll.
  Do not remove the roll before the barcode is printed. You will be unable to keep track of the amount of roll paper left. (See "Keeping Track of the Amount of Roll Paper Left.") ➔User's Guide

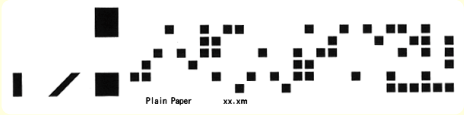

5 Positioning your hands as shown, open the Roll Cover.

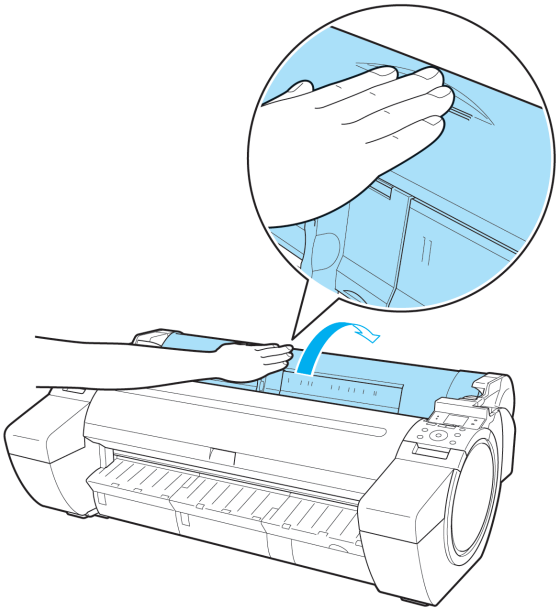

6 Using both hands, rotate the Roll Holder toward the back to rewind the roll.

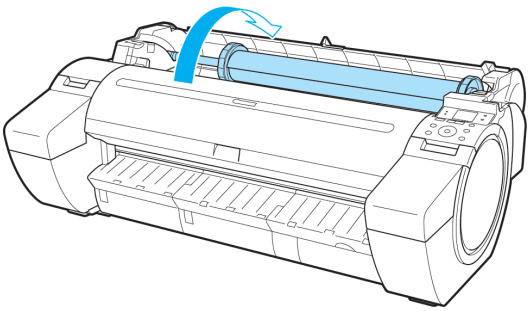

7 Holding the Roll Holder flange (a), remove the holder from the Roll Holder Slot.

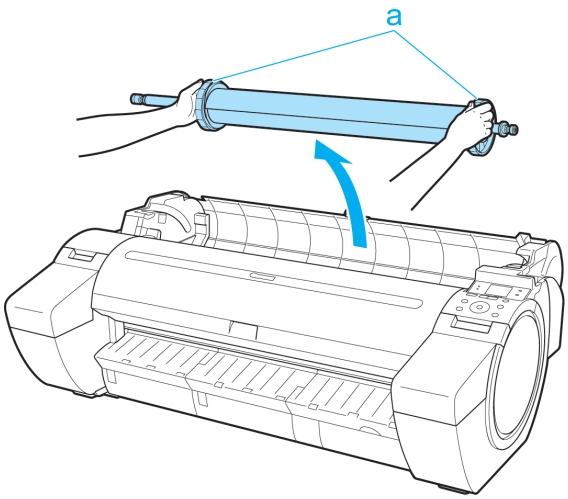

Note

- For instructions on removing the Roll Holder from rolls, see "Removing the Roll Holder from Rolls." ➔User's Guide

8 Holding it at the positions indicated, close the Roll Cover.

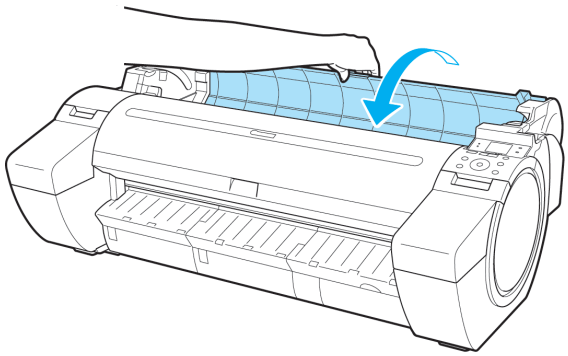

Note

- To load new roll paper in the printer at this point, see "Loading Rolls in the Printer." ➔P.15

Handling sheets

Loading Sheets in the Printer 21
Removing Sheets 23

Loading Sheets in the Printer

Follow these steps to load sheets in the printer.

Important

- One sheet of paper can be loaded in the Paper Feed Slot at a time. Do not load more than one sheet at a time. This may cause paper jams.
- Before feeding paper or printing, make sure the sheet is flat against the Roll Cover. The sheet may jam if it curls before feeding or printing and the trailing edge drops toward the front.
- Paper that is wrinkled or warped may jam. If necessary, straighten the paper and reload it.
- Load the paper straight. Loading paper askew will cause an error. (See "Paper is crooked..") ➔P.117

Note

- Store unused paper in the original package, away from high temperature, humidity, and direct sunlight.

1 Select sheets as the paper source.

- If a print job was received

  Sheets are automatically selected, and the media type and size specified by the print job are shown on the Display Screen. Go to the next step.

- If no print job was received

  1. Press the **Load** button.

  2. Press ▲ or ▼ to select "**Load Cut Sheet**", and then press the **OK** button.

Note

- If any paper has been advanced that will not be used, a message is shown requesting you to remove it. Press ▲ or ▼ to select **Yes**, and then press the **OK** button. Remove the paper and go to the next step.

2 Slide the Width Guide (a) to align it with the mark for the size of paper you will load.

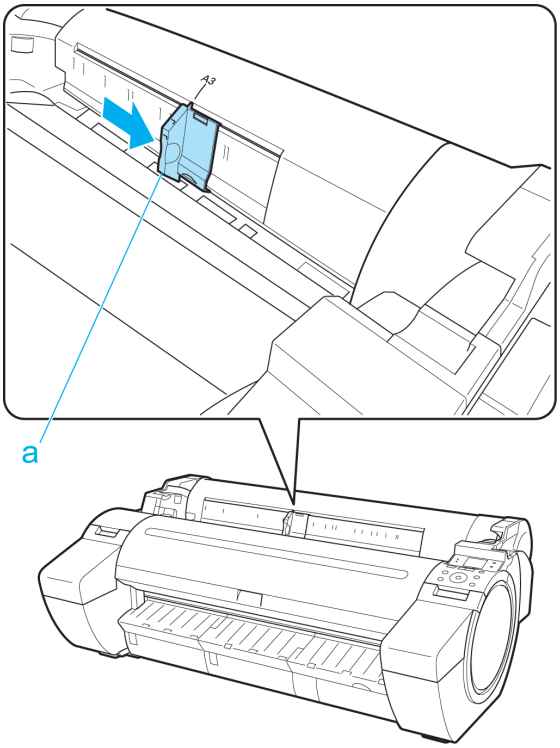

3 Load a single sheet printing-side up in the Paper Feed Slot, with the right edge aligned with the Paper Alignment Guide (a) to the right of the Roll Cover.
Insert the paper until the leading edge makes contact and you hear a tone.

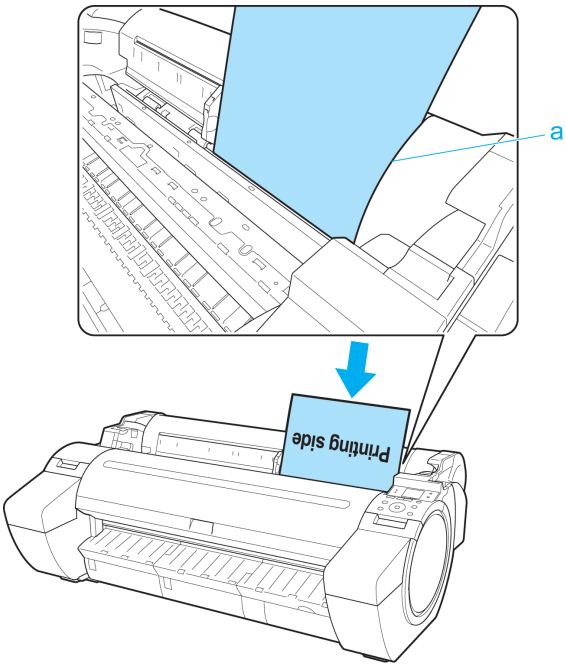

4 Move the Width Guide (a) carefully to match the size of paper loaded.
Set the Width Guide against the edge of the paper to prevent the paper from becoming crooked or wrinkled.

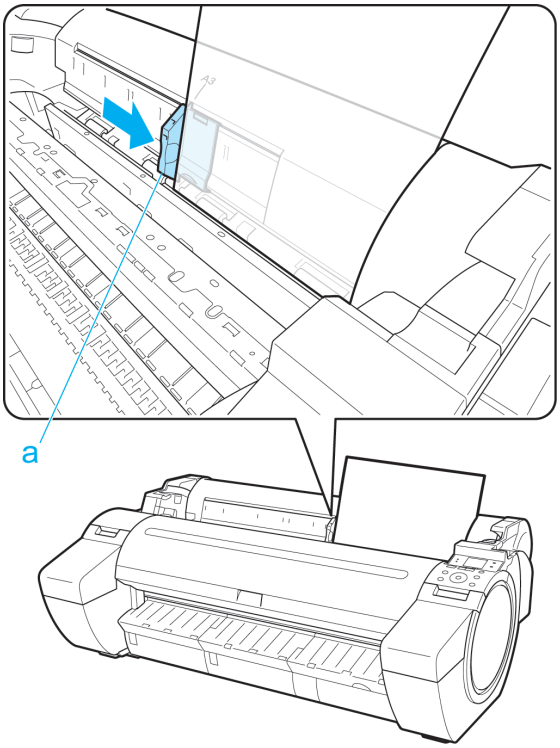

5 Press the **OK** button.

- If a print job was received
  The printer now starts printing the print job.
- If no print job was received
  A menu for selection of the type of paper is automatically shown on the Display Screen.
  Press ▲ or ▼ to select the type of paper, and then press the **OK** button.
  The printer now starts feeding the paper.

Note
- Refer to **Paper Reference Guide** for details on type of paper to select. (See "Displaying the Paper Reference Guide.") ➔User's Guide

Removing Sheets

Remove sheets from the printer as follows.

1 On the **Tab Selection screen** of the Control Panel, press ◀ or ▶ to select the Paper tab ( ).

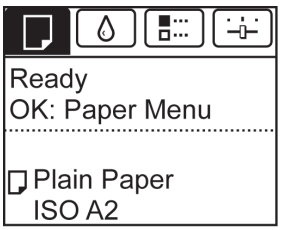

Note
- If the **Tab Selection screen** is not displayed, press the **Menu** button.

2 Press the **OK** button.
The **Paper Menu** is displayed.

3 Press ▲ or ▼ to select **Eject Paper**, and then press the **OK** button.

4 Press ▲ or ▼ to select **Yes**, and then press the **OK** button.
The paper is ejected from the front of the printer.

5 Holding the paper, push the Release Lever back and remove the sheet.

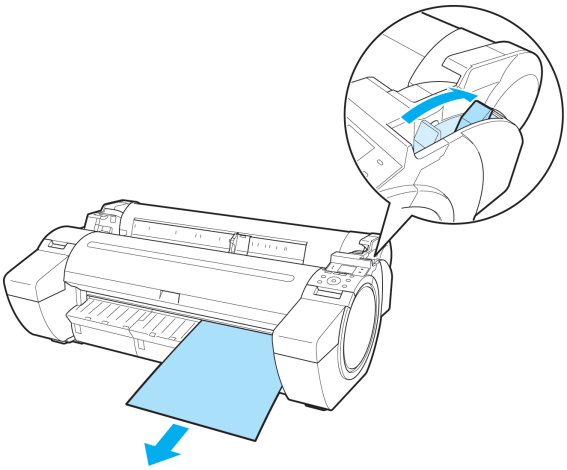

6 Pull the Release Lever forward.

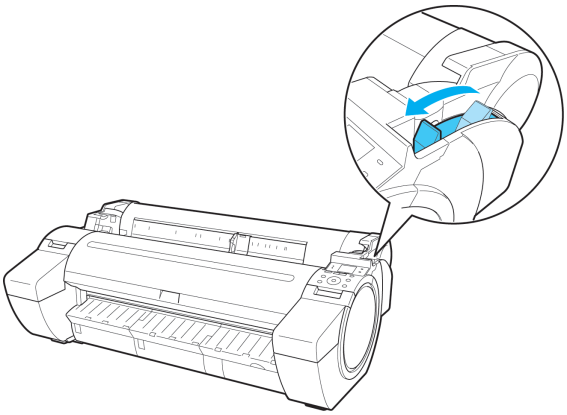

Consumables and Maintenance

Ink Tanks

Replacing Ink Tanks

Compatible ink tanks

For information on the compatible ink tanks for this printer, see "Ink Tanks." ➔User's Guide
Replacement ink tanks in 130 ml (4.4 fl oz) and 300 ml (10.2 fl oz) capacities are supported.

Note
- Depending on the color, you can also use ink tanks of different capacities.

Precautions when handling ink tanks

Take the following precautions when handling ink tanks.

Caution
- For safety, keep ink tanks out of the reach of children.
- If ink is accidentally ingested, contact a physician immediately.

Important
- There may be ink around the ink supply section of ink tanks you removed. Handle ink tanks carefully during replacement. The ink may stain clothing.
- Do not install used ink tanks in another model of printer.
  This will prevent correct ink level detection, which may damage the printer or cause other problems.
- We recommend using up an Ink Tank in the course of printing within six months after breaking the seal. Printing quality may be affected if you use older ink tanks.
- Do not leave the printer without ink tanks installed for extended periods (a month or more). Residual ink may become clogged inside the printer and affect printing quality.

Confirm the message

When the ink level becomes low, a message is displayed on the Display Screen.
According to the message, replace the ink tank or prepare a new ink tank. (See "When to Replace Ink Tanks.") ➔User's Guide

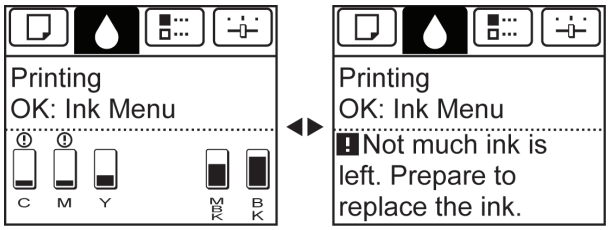

If a message requests you to replace an Ink Tank, press the **OK** button. In this case, you can skip the step **Access the menu for ink tank replacement.** Follow the instructions in **Remove the ink tanks.**

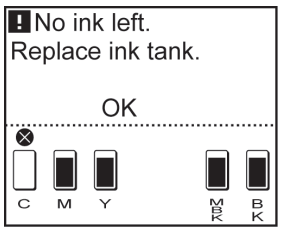

Important
- Do not remove an Ink Tank during initialization immediately after turning on the printer, or during printhead cleaning. Ink may leak out.

Note
- Ink Tank replacement is possible even during printing, when print jobs are being canceled, or when paper is being advanced.

Access the menu for Ink Tank replacement

1 On the **Tab Selection screen** of the Control Panel, press ◀ or ▶ to select the Ink tab ( ).

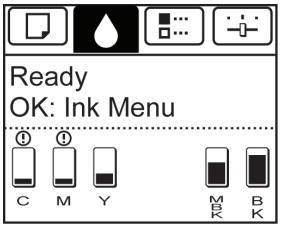

Note
- If the **Tab Selection screen** is not displayed, press the **Menu** button.

2 Press the **OK** button.
The **Ink Menu** is displayed.

3 Press ▲ or ▼ to select **Rep. Ink Tank**, and then press the **OK** button.
A message on the Display Screen requests you to open the Ink Tank Cover.

Remove the Ink Tank

1 Open the Ink Tank Cover and check the ink lamps.
Ink lamps flash when there is little ink left.

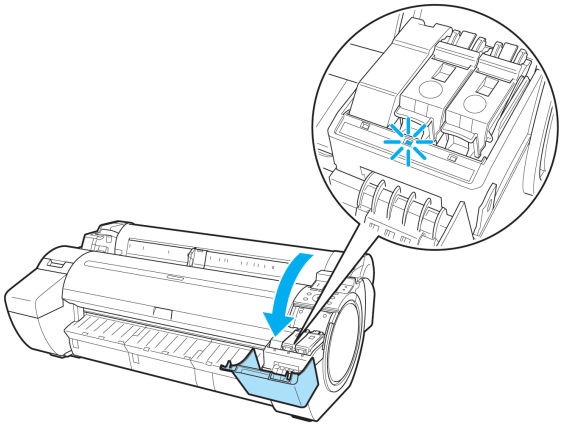

2 Press the tip of the Ink Tank Lock Lever of the color for replacement horizontally and pull the Ink Tank Lock Lever up to open it.

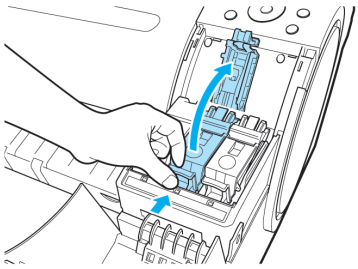

3 Hold the Ink Tank by the grips and remove it. Press the **OK** button.

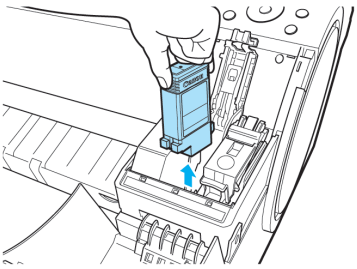

Important

- Do not turn off the printer while the Ink Tank is removed.
  It may cause the interior of the Ink Tank Cover to become soiled.
- If there is still ink in the Ink Tank you removed, store it with the ink holes (a) facing up. Otherwise, ink may leak and cause stains. Put the Ink Tank in a plastic bag and seal it.

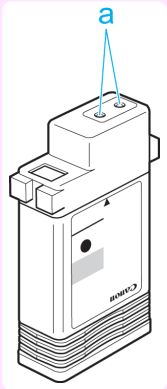

Note

- Dispose of used ink tanks according to local regulations.

Installing Ink Tanks

1 Before opening the pouch, gently agitate the Ink Tank once or twice. Agitate the ink in the Ink Tank by slowly rotating the Ink Tank upside-down and right side up repeatedly.

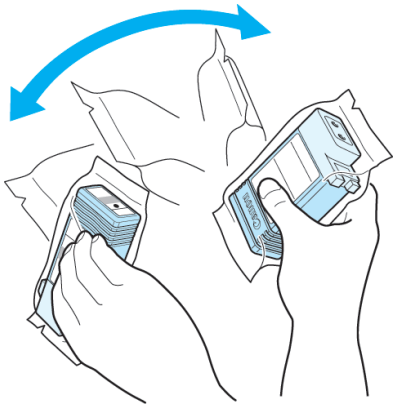

Important

- After installing an ink tank, do not remove and shake it. Doing so may cause the ink to leak out.
- If you do not agitate the Ink Tank, the ink may settle, which may affect printing quality.

2 Open the pouch and remove the Ink Tank.

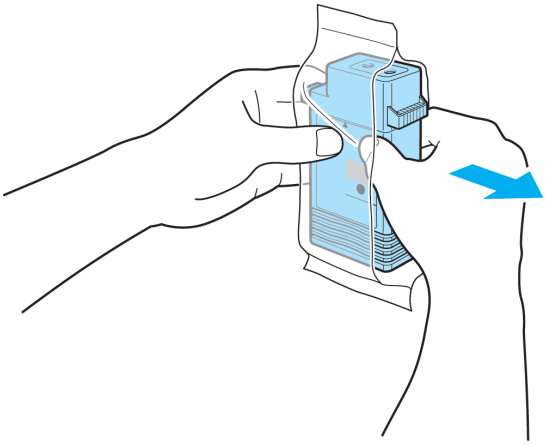

Important
- Never touch the ink holes or electrical contacts. This may cause stains, damage the Ink Tank, and affect printing quality.

3 Press the **OK** button and install the Ink Tank into the holder as shown, with the ink holes facing down.

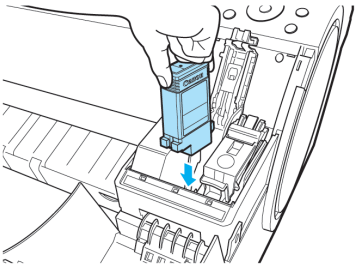

Important
- Ink tanks cannot be installed in the holder if the color or orientation is incorrect.
  If the Ink Tank does not fit in the holder, do not force it in. Check the Ink Tank serial number, the Ink Color Label, the color of the Ink Tank, and the orientation of the Ink Tank before reinstalling it.
  Forcing the Ink Tank into the holder may damage the printer.

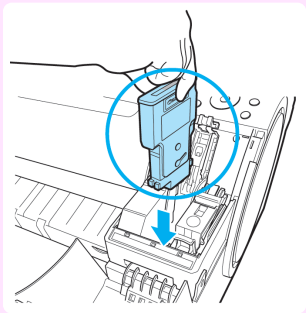

4 Push the Ink Tank Lock Lever closed until it clicks into place.

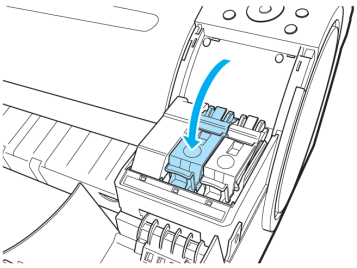

Important

- Do not push the Ink Tank in by hand.
  Forcing the Ink Tank into the holder may damage the printer.

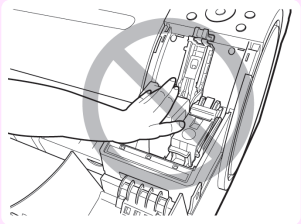

- If a 130 ml (4.4 fl oz) ink tank is installed facing the wrong direction, the rotating part of the Ink Tank Lock Lever come out of place.
  If this happens, open the Ink Tank Lock Lever to return it to the proper position.

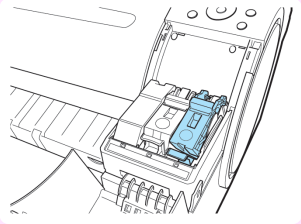

5 Make sure the Ink Lamp is lit in red.

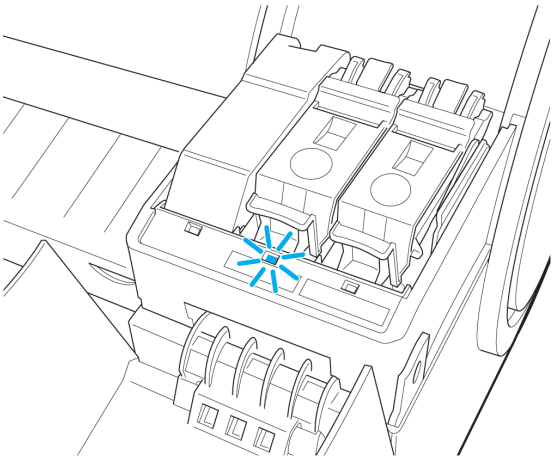

Note

- If the Ink Lamp is not lit, reinstall the tank.

6 Close the Ink Tank Cover.

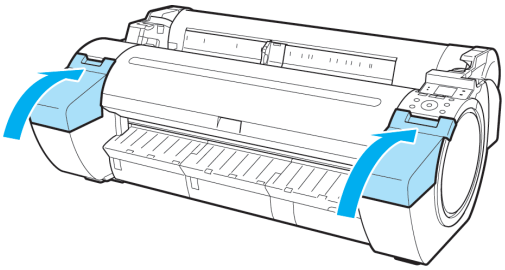

Printheads

Replacing the Printhead

When to replace the Printhead

Replace the Printhead in the following situations.

- If the printing quality does not improve even after one or two cycles of **Head Cleaning B** from the printer menu
- If the Display Screen indicates "**Open top cover and replace the printhead.**"
- If your Canon dealer has advised you to replace the Printhead

Compatible printheads

For information on compatible printheads, see "Printhead." ➔User's Guide

Precautions when handling the Printhead

Take the following precautions when handling the Printhead.

Caution
- For safety, keep the Printhead out of the reach of children.
- If ink is accidentally ingested, contact a physician immediately.
- Do not touch the Printhead immediately after printing. The Printhead becomes extremely hot, and there is a risk of burns.

Important
- There may be ink around the nozzles of the Printhead you remove. Handle the Printhead carefully during replacement. The ink may stain clothing.
- Do not open the Printhead pouch until immediately before installation. After removing the Printhead from the pouch, install it right away. If the Printhead is left after the pouch is opened, the nozzles may dry out, which may affect printing quality.

Access the menu for Printhead replacement

Caution
- When replacing the Printhead immediately after printing, wait a few minutes before replacing it. The metal parts of the Printhead become hot during printing, and there is a risk of burns from touching these parts.

Important
- Your hands may become dirty during Printhead replacement. Use the gloves provided with the new Printhead for replacement.

Note
- Prepare a new Ink Tank when ink levels are low.

1 On the **Tab Selection screen** of the Control Panel, press ◀ or ▶ to select the Settings/Adj. tab ( ).

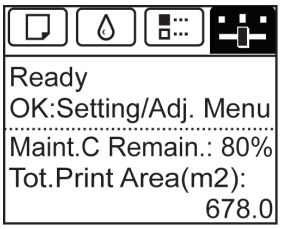

Note
- If the **Tab Selection screen** is not displayed, press the **Menu** button.

2 Press the **OK** button.
The **Set./Adj. Menu** is displayed.

3 Press ▲ or ▼ to select **Maintenance**, and then press the **OK** button.

4 Press ▲ or ▼ to select **Replace P.head**, and then press the **OK** button.
Ink begins being drawn in. When it finishes, instructions are displayed on the Display Screen.

Replace the Printhead

1 Open the Top Cover.
Instructions are now shown on the Display Screen regarding Printhead replacement.

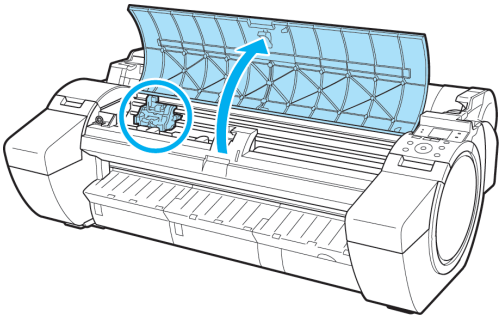

Important
- During Printhead replacement, do not move the Carriage from the position indicated. If you accidentally move the Carriage, you will hear a warning tone, and Printhead replacement is no longer possible.
If you move the Carriage by mistake, close the Top Cover. The Carriage will be moved to the position as indicated.

2 If the Printhead Fixer Cover or Printhead Fixer Lever is dirty, use a damp cloth that you have wrung out completely to wipe it clean.

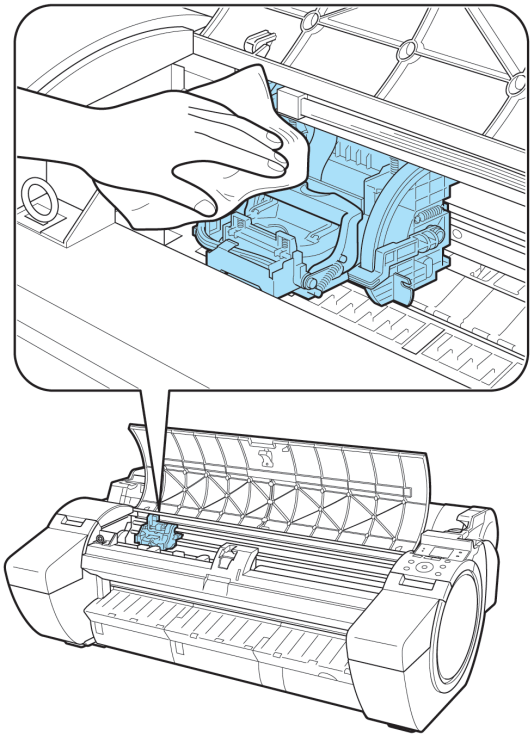

Important

- Do not touch the Linear Scale (a) or Carriage Shaft (b). Touching these parts may damage them.

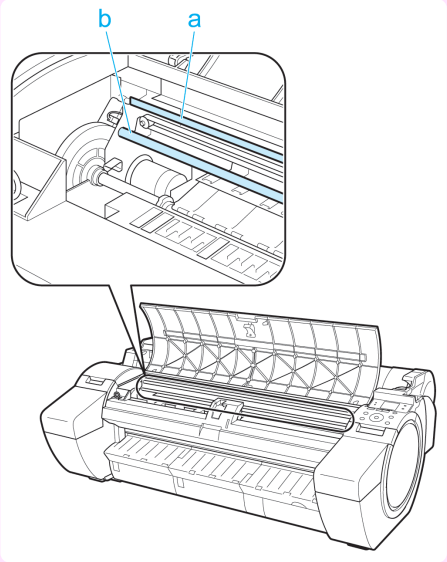

- Never touch the metal contacts of the Carriage. This may damage the printer.

3 Pull the Printhead Fixer Lever forward all the way to open it completely.

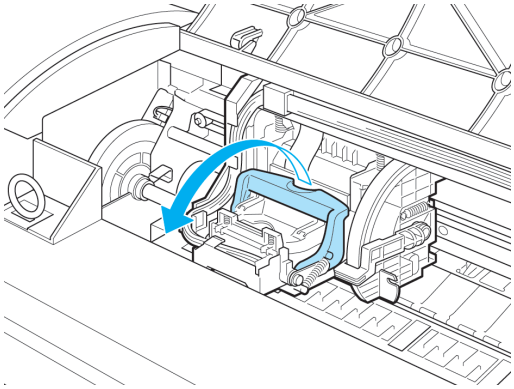

4 Pull up the Printhead Fixer Cover to open it completely.

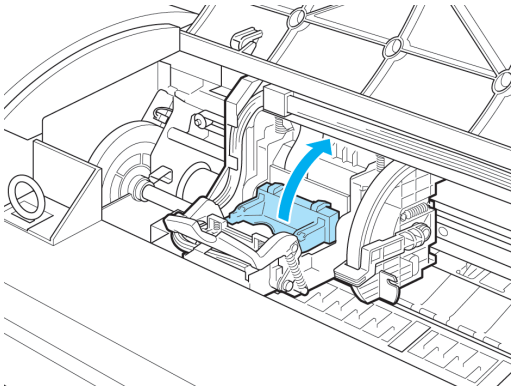

5 Remove the Printhead and press the **OK** button.

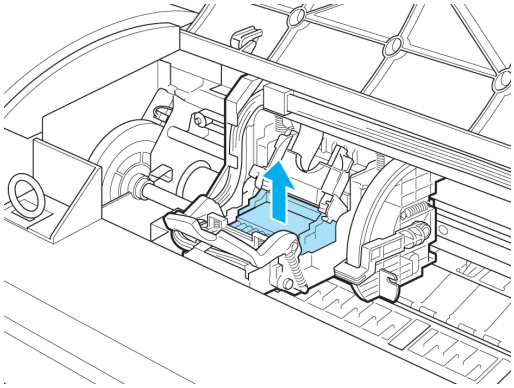

Note

- Dispose of the used Printhead in accordance with local regulations.

6 Holding the new Printhead by the grips (a), remove it from the pouch.

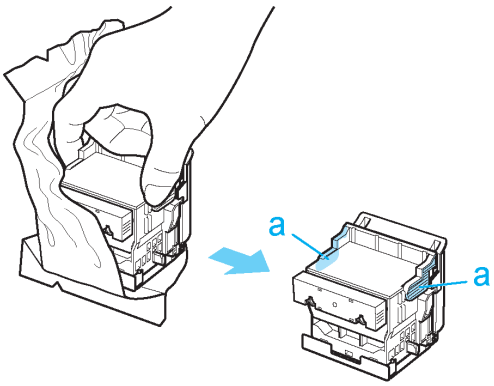

Important

- When handling the Printhead, always hold it by the grips (a). Never touch the nozzles (b) or metal contacts (c). This may damage the Printhead and affect printing quality.
- Never touch the ink supply section (d). This may cause printing problems.

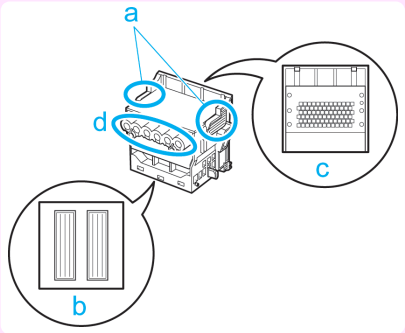

7 While firmly holding the Printhead you have removed, use your other hand to remove the orange Protective Part (a). Squeeze the grips (c) of Protective Part (b) and pull it down to remove it.

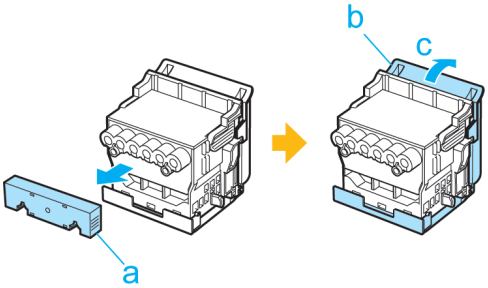

Important

- The inside surface of the Protective Part (a) and Protective Part (b) is coated with ink to protect the nozzles. Be careful not to touch these surfaces when removing the caps.
- The Printhead contains ink to protect the nozzles. We recommend removing Protective Part (b) as you hold it over the Printhead package or safely out of the way to avoid spilling ink and staining your clothes or the surrounding area. If ink accidentally spills, wipe off the ink with a dry cloth.
- If you need to put a Printhead somewhere temporarily before installation, do not keep the nozzles and metal contacts facing down. If the nozzles or metal contacts are damaged, it may affect the printing quality.
- Do not reattach the removed Protective Part. Dispose of these materials in accordance with local regulations.

8 With the nozzles facing down and the metal contacts toward the back, insert the Printhead into the Carriage. Carefully push the printhead firmly into the Carriage, ensuring that the nozzles and metal contacts do not touch the carriage.

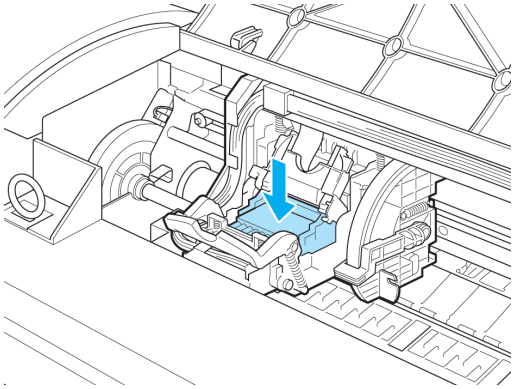

9 Pull the Printhead Fixer Cover down toward the front to lock the Printhead in place.

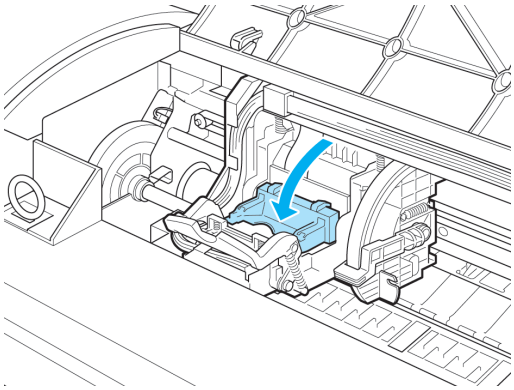

10 Push the Printhead Fixer Lever toward the back of the printer until it clicks.

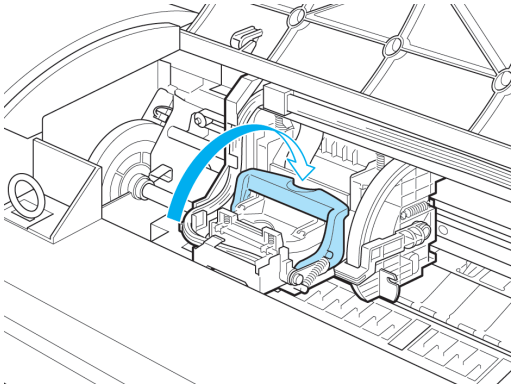

11 Close the Top Cover.
Ink now fills the system.

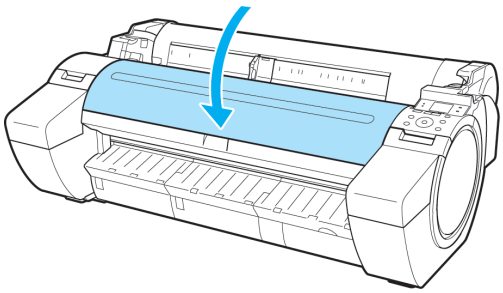

Important

- While ink is being filled, definitely do not remove the Ink Tank or Maintenance Cartridge. Ink may leak out.

Note

- After Printhead has been replaced and filled with ink, **Head Posi. Adj.** (**Auto(Advanced)**) is performed if you have selected **Rep.P.head Print** > **On** in the Control Panel menu. (See "Menu Settings.") ➔User's Guide
  In this case, follow the instructions on the Display Screen for Printhead adjustment.
  If **Rep.P.head Print** is **Off**, perform **Head Posi. Adj.** (**Auto(Advanced)**) yourself. (See "Automatic Adjustment to Straighten Lines and Colors.") ➔P.79

Maintenance Cartridge

Replacing the Maintenance Cartridge

Compatible maintenance cartridges

For information on compatible maintenance cartridges, see "Maintenance Cartridge." ➔User's Guide

Precautions when handling the Maintenance Cartridge

Take the following precautions when handling the Maintenance Cartridge.

Caution

- For safety, keep the Maintenance Cartridge out of the reach of children.
- If ink is accidentally ingested, contact a physician immediately.

Important

- Do not remove the Maintenance Cartridge except to replace it. Ink may leak out.
- Do not remove an Maintenance Cartridge during initialization immediately after turning on the printer, during Printhead cleaning, while ink is being drawn out, or during initialization immediately after replacing the Maintenance Cartridge.
  The Maintenance Cartridge may become damaged or ink may leak out.
- To prevent ink from leaking from a used Maintenance Cartridge, avoid dropping the cartridge or storing it at an angle. Otherwise, ink may leak and cause stains.
- Ink adheres to the top of the Maintenance Cartridge after it has been used. Handle the Maintenance Cartridge carefully during replacement. The ink may stain clothing.

Confirm the message

When the Maintenance Cartridge is almost empty, a message is shown on the Display Screen. According to the message, replace the Maintenance Cartridge or prepare a new Maintenance Cartridge. (See "When to Replace the Maintenance Cartridge.") ➔User's Guide

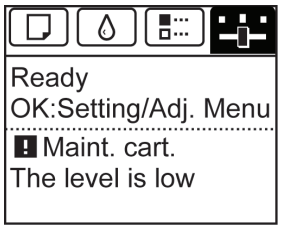

If a message is displayed requesting Maintenance Cartridge replacement, you can skip the step **Access the menu for Maintenance Cartridge replacement.** Follow the instructions in **Replace the Maintenance Cartridge.**

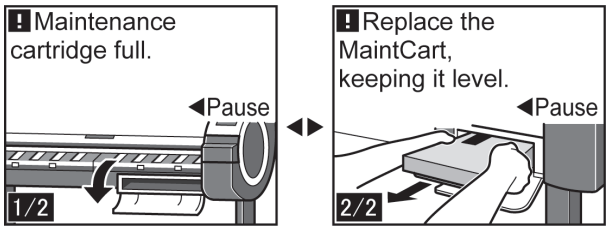

Access the menu for Maintenance Cartridge replacement

1 On the **Tab Selection screen** of the Control Panel, press ◀ or ▶ to select the Settings/Adj. tab ( ).

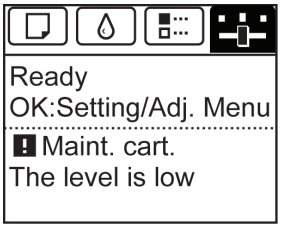

Note
- If the **Tab Selection screen** is not displayed, press the **Menu** button.

2 Press the **OK** button.
The **Set./Adj. Menu** is displayed.

3 Press ▲ or ▼ to select **Maintenance**, and then press the **OK** button.

4 Press ▲ or ▼ to select **Repl. maint cart**, and then press the **OK** button.
A message on the Display Screen advises you to open the Maintenance Cartridge Cover.

Replace the Maintenance Cartridge

1 Open the box, remove the plastic bag and packaging material, and take out the Maintenance Cartridge.

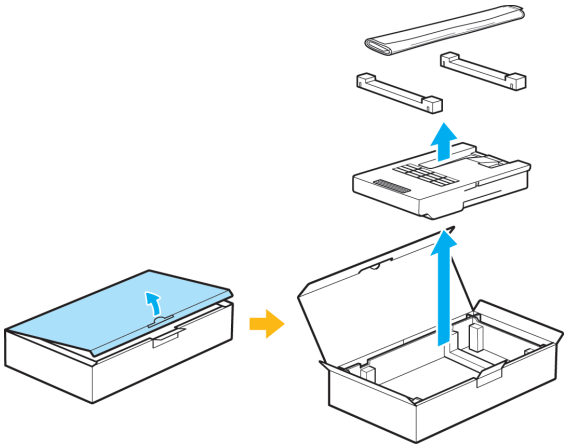

Important
- Never touch the metal contacts (a). This may damage the Maintenance Cartridge.

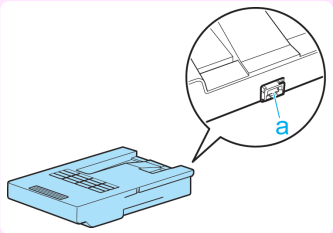

2 At this point, open the Maintenance Cartridge Cover.

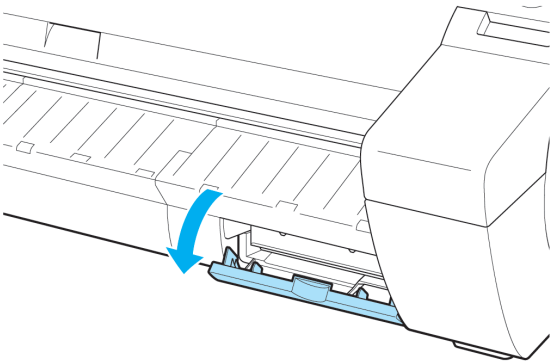

3 Hold the used Maintenance Cartridge by the grip (a) with one hand and put your other hand under the Maintenance Cartridge to hold it firmly on the bottom, keeping it level as you pull it out.

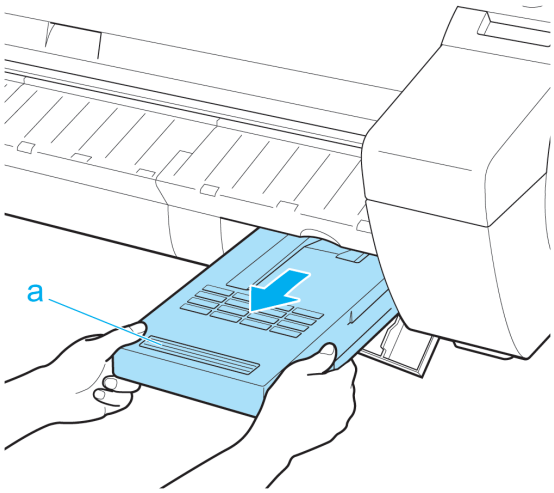

Important

- Used Maintenance Cartridges are heavy. Always grasp the cartridge firmly and keep the cartridge level during removal and storage. If you drop a used Maintenance Cartridge or store it at an angle, ink may leak and cause stains.
- The remaining Maintenance Cartridge capacity is recorded on each printer. Do not install a used Maintenance Cartridge in another printer.

4 Keep the used Maintenance Cartridge level as you put it in the plastic bag. Expel excess air from the plastic bag and seal the zipper.

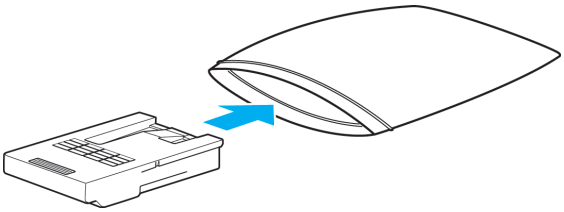

5 Confirm the Maintenance Cartridge is right-side up, put it in the box with the packaging material attached, and store it so that it stays level.

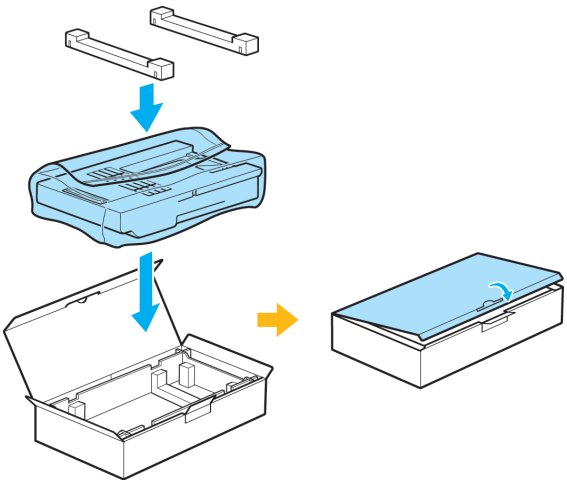

Important
- Always put the used Maintenance Cartridge back in the box and store the box on a flat surface. Also, seal the zipper thoroughly. Otherwise, ink may leak and cause stains.

Note
- Put the used Maintenance Cartridge in the plastic bag of the new cartridge, and dispose of it in accordance with local regulations.

6 Keeping the new Maintenance Cartridge level, insert it all the way in.
The printer now initializes the Maintenance Cartridge.

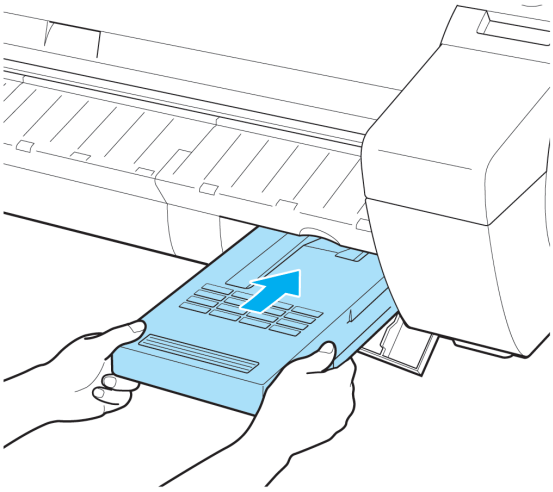

Important
- Do not remove the Maintenance Cartridge during initialization immediately after replacing the Maintenance Cartridge. The Maintenance Cartridge may become damaged.

7 Close the Maintenance Cartridge Cover.

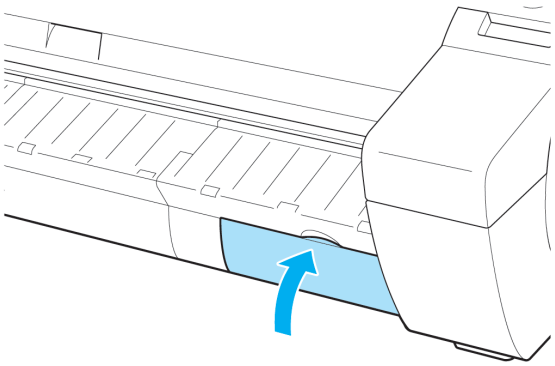

Note

- If you did not perform the operation in **Access the menu for Maintenance Cartridge replacement**, this is the end of the procedure and you do not need to press the **OK** key in the next step.

8 Press the **OK** button.

Cleaning the Printer

Cleaning Inside the Top Cover 42
Cleaning the Printhead 44

Cleaning Inside the Top Cover

Clean inside the Top Cover about once a month to maintain better printing quality and help prevent problems. Also clean inside the Top Cover in the following situations to ensure optimal operation.

- If the printed surface or the underside of paper is dirty after printing
- After you have used up a roll
- After borderless printing
- After printing on small paper
- After printing on paper that generates a lot of cutting debris
- If you have replaced the roll
- After printing on paper that generates a lot of paper dust
- After printing on adhesive paper

Important

- If the Platen inside the Top Cover becomes dirty, it may soil the underside of paper. We recommend cleaning the Platen after borderless printing or printing on small paper.
- If the Ejection Guide is dirty, it may soil the edge of the paper when the paper is cut. We recommend cleaning the Ejection Guide even if it does not appear dirty, because it may actually be covered with paper dust.
- Printing on adhesive paper may leave adhesive on the Platen, Paper Retainer, or other parts. To prevent paper jams, we recommend cleaning inside the Top Cover after printing.

1 Open the Top Cover.

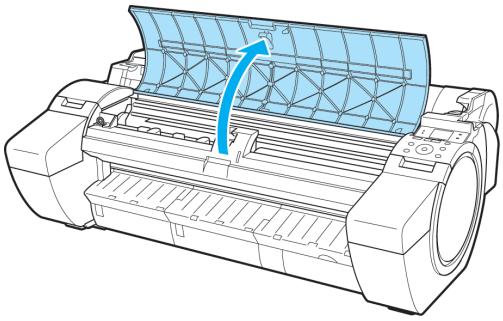

2 If paper dust has accumulated in the Vacuum holes (a) on the Platen or in the Borderless Printing Ink Grooves (b), use the Cleaning Brush (c), provided with the printer, to wipe it away.

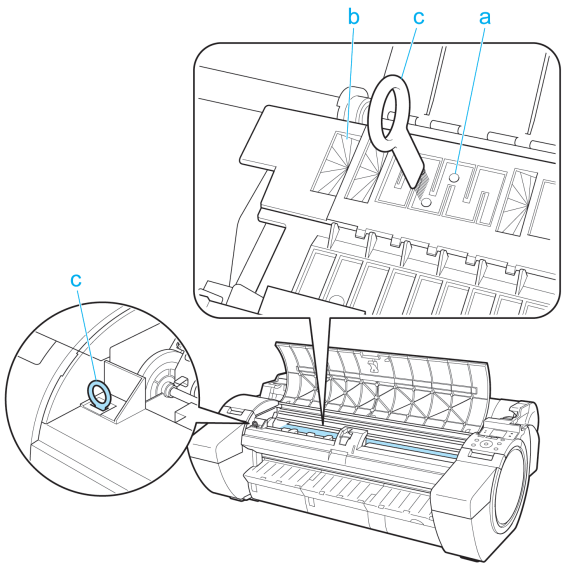

Note
- If the Cleaning Brush is dirty, rinse it in water.

3 Using a damp cloth that you have wrung out completely, wipe inside the Top Cover to clean it. Wipe away any ink residue on the Platen as a whole (a), the Paper Retainer (b), Borderless Printing Ink Grooves (c), and Ejection Guide (d).

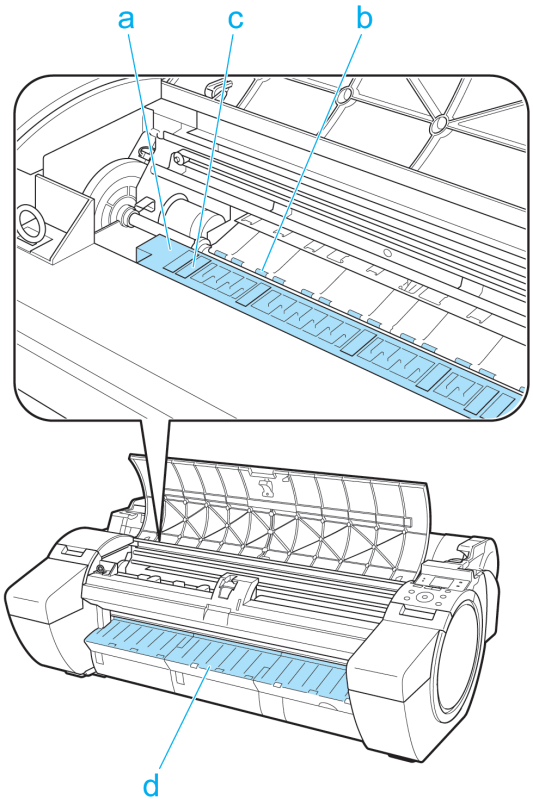

Warning
- Never use flammable solvents such as alcohol, benzene, or thinner. If these substances come into contact with electrical components inside the printer, there is a risk of fire or electrical shock.

Important

- Do not use a dry cloth to wipe inside the Top Cover. This may create a static charge, which may attract dust and affect the printing quality.
- Do not touch the Linear Scale (a) or Carriage Shaft (b). This may stain your hands and damage the printer.

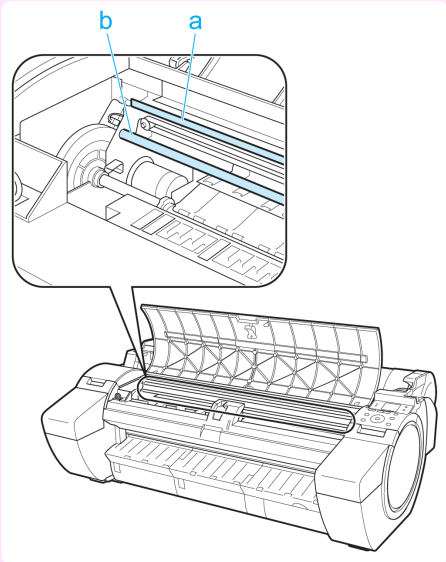

Note

- When cleaning between the Platen and Ejection Guide, use a damp cloth that you have wrung out completely to wipe over the Output Tray and along grooves.

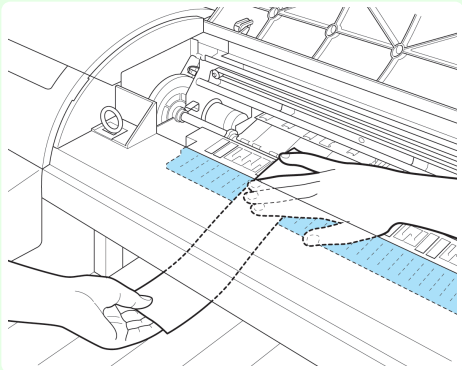

4 Close the Top Cover.

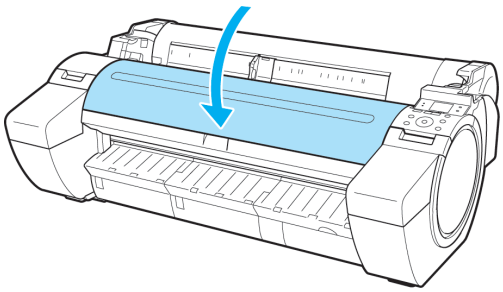

Cleaning the Printhead

If printing is faint, cleaning the Printhead may improve results.
Choose one of two Printhead cleaning modes (**Head Cleaning A** or **Head Cleaning B**), depending on the problem to resolve.

- **Head Cleaning A**

Use this mode if printing is faint or contains foreign substances. This method of cleaning consumes the least amount of ink.

- **Head Cleaning B**
  Use this mode if no ink is ejected at all, or if **Head Cleaning A** does not solve the problem.

Important
- Do not remove the Maintenance Cartridge or ink tanks during either **Head Cleaning A** or **Head Cleaning B**. Ink may leak or an error may occur.
- If printing does not improve even if you execute **Head Cleaning B**, try repeating **Head Cleaning B** once or twice. If this still does not improve printing, the Printhead may have reached the end of its useful life. Contact your Canon dealer for assistance.

Note
- By default, nozzles are checked at fixed intervals.
  Configure the settings on the Control Panel menu in **Nozzle Check**.
  (See "Menu Settings.") ➔User's Guide

Perform cleaning as follows.

1 On the **Tab Selection screen** of the Control Panel, press ◀ or ▶ to select the Settings/Adj. tab ( ).

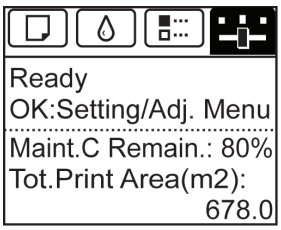

Note
- If the **Tab Selection screen** is not displayed, press the **Menu** button.

2 Press the **OK** button.
The **Set./Adj. Menu** is displayed.

3 Press ▲ or ▼ to select **Maintenance**, and then press the **OK** button.

4 Press ▲ or ▼ to select **Head Cleaning**, and then press the **OK** button.

5 Press ▲ or ▼ to select **Head Cleaning A** or **Head Cleaning B**, and then press the **OK** button.
Head cleaning is now executed.

6 Print a test pattern to check the nozzles, and determine whether cleaning has cleared the nozzles. (See "Checking for Nozzle Clogging.") ➔User's Guide

Printer Parts

Operations and Display Screen

Control Panel 46
Menu Operations 48
Menu Structure 51

Control Panel

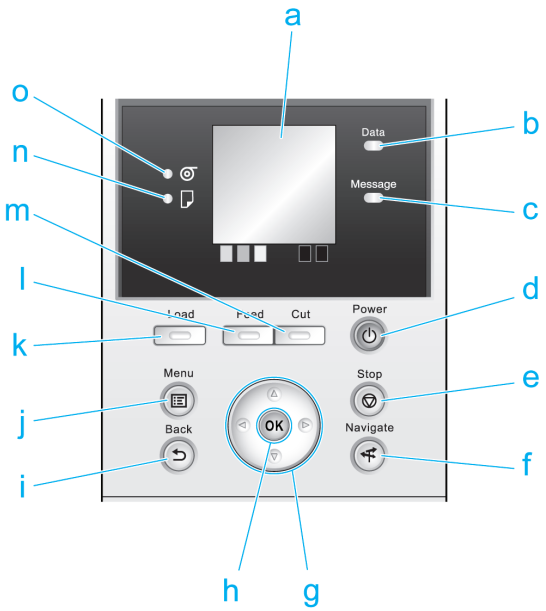

a Display Screen

Shows printer menus, as well as the printer status and messages.

b **Data Lamp** (green)

- Flashing

  During printing, the Data lamp flashes when the printer is receiving or processing print jobs. Otherwise, this lamp flashes when the print job is paused or the printer is updating the firmware.

- Off

  There are no active print jobs when the Data lamp is off.

c **Message Lamp** (orange)

- On

  A warning message is displayed.

- Flashing

  An error message is displayed.

- Off

  The printer is off or is operating normally.

d **Power** button (green)

Turns the printer on and off. (See "Turning the Printer On and Off.") ➔User's Guide

The **Power** button is lit when the printer is on or in Sleep mode.

e Stop button

Cancels print jobs in progress and ends the ink drying period.

f Navigate button

Enables you to check instructions for loading and removing paper or replacing ink tanks or printheads, as well as other operations. (See "How to View Instructions with Navigate.") ➔User's Guide

g Arrow buttons

- ◀ button

  Press this button on the **Tab Selection screen** to move to another tab.
  In menu items requiring numerical input, press this button to move to another digit.

- ▲ button

  Press this button in the menu to move to another item.
  In menu items requiring numerical input, press this button to increment the number.

- ▶ button

  Press this button on the **Tab Selection screen** to move to another tab.
  In menu items requiring numerical input, press this button to move to another digit.

- ▼ button

  Press this button in the menu to move to another item.
  In menu items requiring numerical input, press this button to decrement the number.

h OK button

Press this button on the **Tab Selection screen** to display the menu of the tab shown.
Pressing this button in menu items of each tab for which ⊞ is displayed at left will move to the lower level of the menu item, enabling you to execute menu commands or set menu values.
Also press this button if the Display Screen indicates to press the **OK** button.

i Back button

Displays the screen before the current screen.

j Menu button

Displays the **Tab Selection screen**. (See "Menu Settings.") ➔User's Guide

k Load button

Press this button when loading or replacing paper.
(See "Loading Rolls in the Printer.") ➔P.15
(See "Loading Sheets in the Printer.") ➔P.21

l Feed button

Pressing this button when rolls are loaded enables you to reposition the paper. (See "Feeding Roll Paper Manually.") ➔User's Guide

m Cut button

Pressing this button when rolls are loaded cuts the paper, if you have specified **Automatic** or **Eject** in **Cutting Mode** in the Control Panel menu. (See "Specifying the Cutting Method for Rolls.") ➔User's Guide

n Cut Sheet lamp (green)

Lit when sheets are selected as the paper source.

o Roll Media lamp (green)

Lit when rolls are selected as the paper source.

Note

- To recover from Sleep mode, any button can be pressed except the **Power** button.

Menu Operations

To view available menus organized on tabs, select a tab on the **Tab Selection screen** and press the **OK** button. For details, see "Menu Settings." ➔User's Guide

- When the Ink tab is selected and the **OK** button is pressed

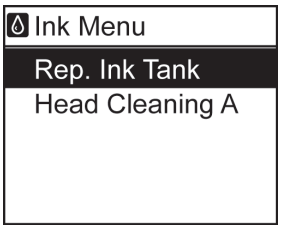

Note
- If the **Tab Selection screen** is not displayed, pressing **OK** will not display menus.
  Menus can be selected after you resolve the problem.

Simply press buttons on the Control Panel to access menus on various tabs from the **Tab Selection screen** and set or execute **Menu** items.
The following section describes menu operations and how they are presented in this **User Manual**.

- Accessing menus ➔P.48
- Specifying menu items ➔P.49
- Specifying numerical values ➔P.49
- Executing menu commands ➔P.50

Accessing menus

Printer menus are grouped by function.
Menus are displayed with the upper line selected. You can use the buttons on the Control Panel to access each menu.

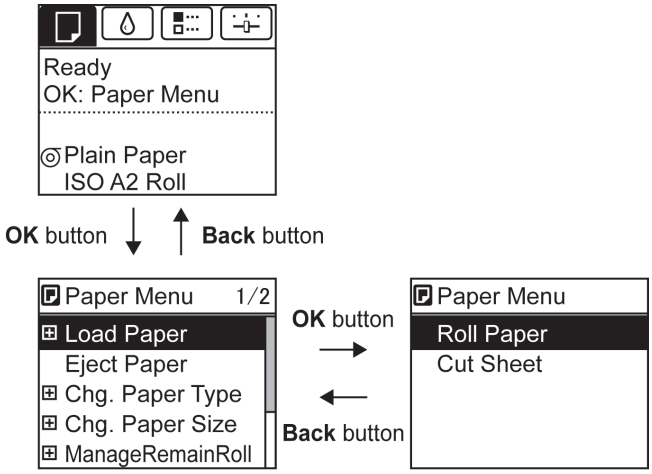

- Press **Back** to access a higher menu in the menu list, and press **OK** to access a lower one. If not all menu items are displayed, hold down ▲ or ▼ to scroll through higher and lower menu items. Items you select are highlighted.

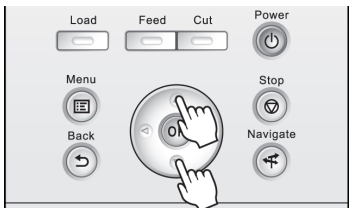

The scroll bar at right indicates the current position in the overall menu.

- Lower menus are available if ⊞ is displayed at right next to the second and subsequent rows. To access the lower menus, select the menu and press the **OK** button.

Specifying menu items

Menu items can be set as follows.

1 Press ▲ or ▼ to select the desired setting, and then press the **OK** button.
After two seconds, the display reverts to the upper level menu.

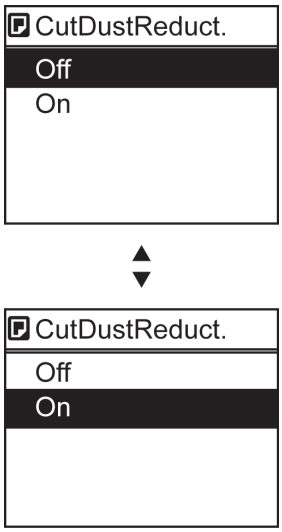

Note
- If a confirmation message is displayed regarding the setting you entered, follow the on-screen instructions.

Specifying numerical values

Follow these steps to enter numbers. In this example, network settings items are entered.

1 Press the ◀ or ▶ button to move to the next field for input.

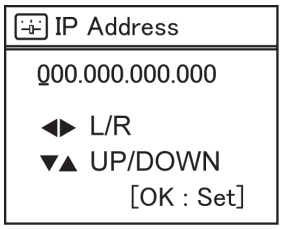

2 Press the ▲ or ▼ button to enter the value.

Note
- Hold down ▲ or ▼ to increase or decrease the value continuously.

3 Repeat steps 1 and 2 to complete the settings, and then press the **OK** button.

Note
- If a confirmation message is displayed regarding the setting you entered, follow the on-screen instructions.

Executing menu commands

Menu commands can be executed as follows.

1 Press ▲ or ▼ to select the action to execute, and then press the **OK** button.
The menu command is now executed.

Menu Structure

The menu structure is shown categorized by tab. The * on the right side of an item indicates the default value.
The printer menu is classified into regular menu items available when no print job is in progress and menu during printing items only available while printing is in progress. see "Printer Menu Operations." ➔User's Guide

Regular menu	Menu during printing
Paper Menu	Not displayed
Ink Menu	The same Ink Menu as normal is displayed.
Job Menu	The same Job Menu as normal is displayed.
Set./Adj. Menu	A limited Set./Adj. Menu containing the following items is displayed. • **Adj. Fine Feed**(*1) • **Printer Info**

*1: Only displayed in the menu during printing. Not displayed in the regular menu.

For instructions on menu operations, see "Menu Operations." ➔P.48
For details on menu items, see "Menu Settings." ➔User's Guide

Paper Menu

The **Paper Menu** is not displayed during printing.

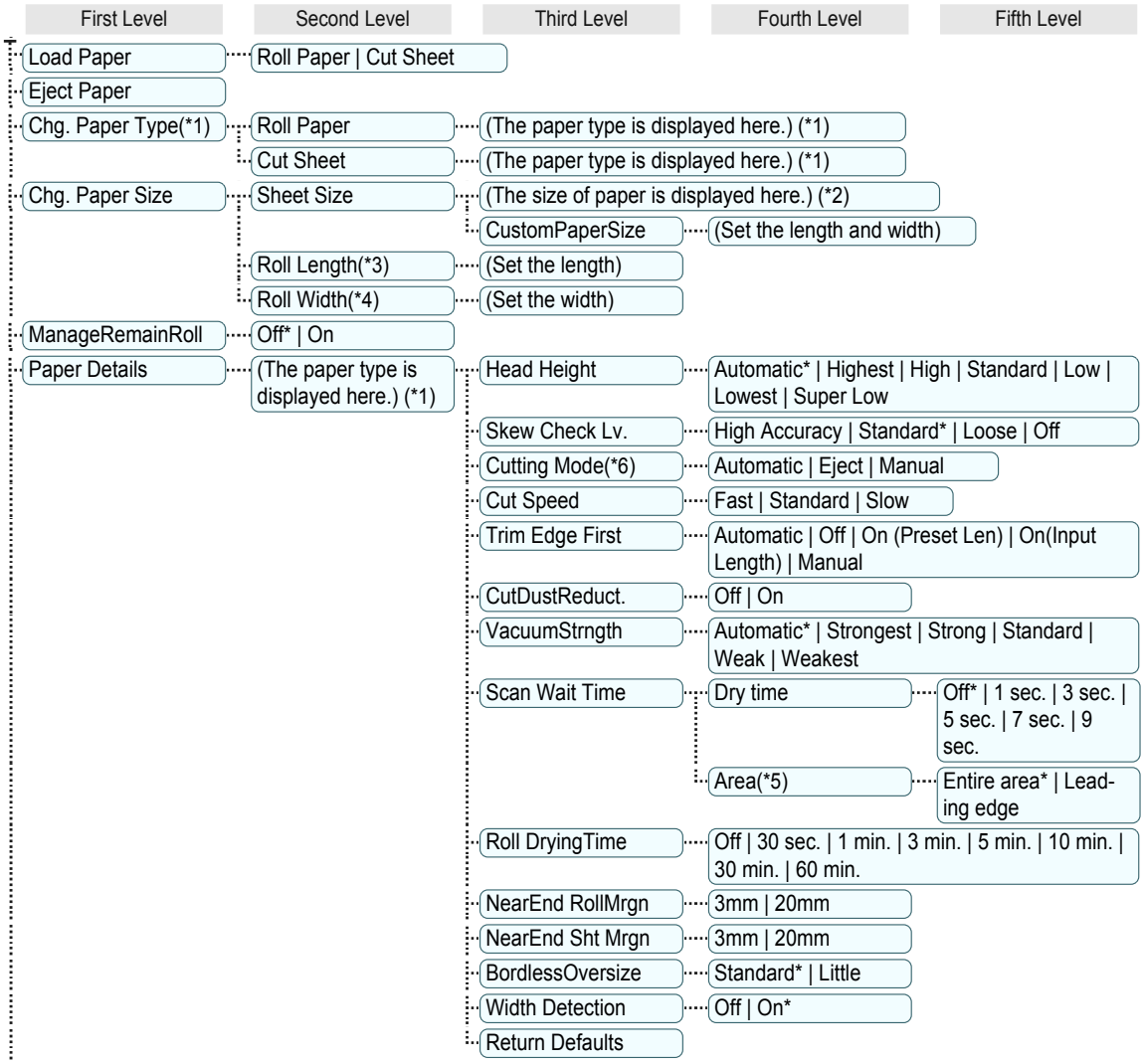

First Level	Second Level	Third Level	Fourth Level	Fifth Level
Paper Details				
Keep Paper Type	Off* | On			

*1: For information on the types of paper the printer supports, refer to the **Paper Reference Guide**. (See "Displaying the Paper Reference Guide.") ➔User's Guide Types of paper in the printer driver and related software (as well as on the Control Panel) are updated when you install the printer driver from the User Software CD-ROM or if you update paper information with the Media Configuration Tool. (See "Updating paper information.") ➔User's Guide

*2: For information on the sizes of paper the printer supports, see "Paper Sizes." ➔User's Guide

*3: Available only if **ManageRemainRoll** is **On**.

*4: Available only if **Width Detection** is **Off**.

*5: **Leading edge** is not available as a setting option in the **Paper Detailed Settings** dialog box of the printer driver.

*6: see "Specifying the Cutting Method for Rolls." ➔User's Guide

Ink Menu

First Level
Rep. Ink Tank
Head Cleaning A

Job Menu

First Level	Second Level	Third Level	Fourth Level	Fifth Level
Job Log(*1)	(Choose from information about the latest three print jobs.)	Document Name		
		User Name		
		Page Count		
		Job Status	OK | CANCELED	
		Print Start Time	yyyy/mm/dd hh:mm:ss	
		Print End Time	yyyy/mm/dd hh:mm:ss	
		Print Time	xxxsec.	
		Print Size	xxxxxxxxsq.mm	
		Media Type		
		Interface	USB | Network	
		Ink Consumed	Tot.Ink Consumed	xxx.xxx ml
			(The ink color is displayed here.)	xxx.xxx ml
		Print settings		
		Head Height		
		Temp./Humidity		
		Adjustment req.		
Print Job Log				
Pause Print	Off* | On			

*1: Restrictions apply if a password is configured using **Change Password** in the **Admin. Menu**.
Viewing is possible for administrators only.

Set./Adj. Menu

Limited items are displayed during printing. The displayed items are indicated by annotations.

First Level	Second Level	Third Level	Fourth Level	Fifth Level	Sixth Level	Seventh Level	Eighth Level
Test Print	Nozzle Check | Status Print | Interface Print | GL2 Set Print | Paper Details | Print Job Log | Menu Map | Color Palette						
Adjust Printer	Head Posi. Adj.	Auto(Standard) | Auto(Advanced) | Manual(*1)					
	Head Inc. Adj.						
	Feed Priority	Adj. Priority	Automatic* | Print Quality | Print Length				
		Adj. Quality(*2)	Auto(GenuinePpr) | Auto(OtherPaper) | Manual				
		Adjust Length(*3)	Adjustmentprint	A:High | B:Standard/Draft			
			Change Settings	A:High | B:Standard/Draft			
Maintenance	Head Cleaning	Head Cleaning A | Head Cleaning B					
	Nozzle Check						
	Replace P.head						
	Repl. maint cart						
	Head Info						
GL2 Replot							
GL2 BufferClear							
GL2 Settings	Quality Manager	Color Mode	Monochrome | Color (CAD) 1* | Color (CAD) 2 | Color (CAD) 3 | Color (CAD) 4 | Color (CAD) 5				
		Print Quality	Fast | Standard* | High				
		Input Resolution	600dpi* | 300dpi				
		Print (Economy)	Off* | On				
	Paper Manager	Paper Source	Automatic* | Roll Paper | Cut Sheet				
		Margin	3mm(Standard)* | 5mm				
		Conserve Paper	Off* | On				
		Auto Rotate	Off* | On				
	Line & Pen Manager	Enable merge	Off* | On				
		Pen Setup	Select Palette	Software* | Palette A | Palette B | Factory			
			Define Palette	Palette A	(Select the pen number)	Width	(Indicates the value of Width)
						Color	0～255
						Line Attributes	No Setting | Circle Setting

First Level	Second Level	Third Level	Fourth Level	Fifth Level	Sixth Level	Seventh Level	Eighth Level
				Palette B	(Select the pen number)	(Indicates Width, Color, and Line Attributes)	(Specify the values of Width, Color, and Line Attributes)
				Factory	(Select the pen number)	(Indicates Width, Color, and Line Attributes)	
			Reset Palette	All Palette | Palette A | Palette B			
		Smoothing	Software* | Smooth				
		ThickenFineLines	Off* | On				
		AdjustFaintLines	Off | On*				
	Processingoption	Warning	Off* | On				
		PageSizeProcess1	Off* | On				
		PageSizeProcess2	Off* | On				
	GL2 Set Print						
Interface Setup(*7)	EOP Timer(*7)	10 sec. | 30 sec. | 1 min. | 2 min. | 5 min. | 10 min.* | 30 min. | 60 min.					
	TCP/IP(*7)	IPv4(*7)	IPv4 Mode(*7)	Automatic | Manual*			
			Protocol(*4)(*7)	DHCP(*7)	On | Off*		
				BOOTP(*7)	On | Off*		
				RARP(*7)	On | Off*		
			IPv4 Settings(*8)	IP Address(*8)	xxx.xxx.xxx.xxx		
				Subnet Mask(*8)	xxx.xxx.xxx.xxx		
				Default G/W(*8)	xxx.xxx.xxx.xxx		
			DNS Settings(*8)	DNS Dync update(*8)	On | Off*		
				Pri. DNS SrvAddr(*8)			
				Sec. DNS SrvAddr(*8)			
				DNS Host Name(*8)			
				DNS Domain Name(*8)			
		IPv6(*7)	IPv6 Support(*7)	On | Off*			
			IPv6 StlessAddrs(*7)(*9)	On* | Off			
			DHCPv6(*7)(*9)	On | Off*			
			DNS Settings(*8)(*9)	DNS Dync update(*8)	Statefull Addr(*8)	On | Off*	
					Stateless Addr(*8)	On | Off*	
				Pri. DNS SrvAddr(*8)			

First Level	Second Level	Third Level	Fourth Level	Fifth Level	Sixth Level	Seventh Level	Eighth Level
				Sec. DNS SrvAddr(*8)			
				DNS Host Name(*8)			
				DNS Domain Name(*8)			
	Ethernet Driver(*7)	Auto Detect(*7)	On* | Off				
		Comm.Mode(*5)(*7)	Half Duplex* | Full Duplex				
		Ethernet Type(*5)(*7)	10 Base-T* | 100 Base-TX | 1000 Base-T				
		Spanning Tree(*7)	Not Use* | Use				
		MAC Address(*7)	xxxxxxxxxxxx				
	Interface Print(*7)						
	Return Defaults(*7)						
System Setup	Sleep Timer(*10)	5 min.* | 10 min. | 15 min. | 20 min. | 30 min. | 40 min. | 50 min. | 60 min. | 210 min.					
	Shut Down Timer	Off | 5 min. | 10 min. | 30 min. | 1 hour | 4 hours | 8 hours* | 12 hours					
	Buzzer	Off | On*					
	Contrast Adj.	-4,-3,-2,-1,0*,+1,+2,+3,+4					
	Date & Time(*7)	Date yyyy/mm/dd(*6)(*7)	Time hh:mm				
	Date Format(*7)	yyyy/mm/dd* | dd/mm/yyyy | mm/dd/yyyy					
	Language	English | 日本語 | Français | Italiano | Deutsch | Español | Português | Русский | 中文 (简体字) | 한국어					
	Time Zone(*7)	0:London (GMT) | +1:Paris,Rome | +2:Athens,Cairo | +3:Moscow | +4:Eerevan,Baku | +5:Islamabad | +6:Dacca | +7:Bangkok | +8:Hong Kong | +9:Tokyo,Seoul | +10:Canberra | +11:NewCaledonia | +12:Wellington | -12:Eniwetok | -11:Midway is. | -10:Hawaii(AHST) | -9:Alaska(AKST) | -8:Oregon (PST) | -7:Arizona(MST) | -6:Texas (CST) | -5:NewYork(EST) | -4:Santiago | -3:Buenos Aires | -2: | -1:Cape Verde					
	Length Unit	meter* | feet/inch					
	Detect Mismatch	Pause | Warning | None*					
	Paper Size Basis	Roll Selection 1	ISO A3 (297mm)* | 300mm Roll				
		Roll Selection 2	10in. (254mm)* | JIS B4 (257mm)				
	Keep Paper Size	Off* | On					
	TrimEdge Reload	Automatic | Off* | On					
	Rep.P.head Print	Off | On*					
	Nozzle Check	Frequency	Standard* | 1 page | 10 pages | Off				
		Warning	Off* | On				
	Use USB(*7)	On* | Off					

First Level	Second Level	Third Level	Fourth Level	Fifth Level	Sixth Level	Seventh Level	Eighth Level
	Use Ethernet(*7)	On* | Off					
	Use RemoteUI(*7)	On* | Off					
	Reset PaprSetngs(*7)						
	Show Job Log(*7)	Off | On*					
Prep.Move Printer	Standard | Limited						
Admin. Menu(*7)	Change Password(*8)	(The screen for setting the password is displayed)					
	Init.Admin.Pswd(*8)						
Adj. Fine Feed(*11)(*12)							
Printer Info(*11)	Paper Info						
	Ink Info						
	Head Info						
	System Info						
	Error Log						
	Use Situation	Tot.Print Area | Duty Counter					

*1: Available after you have used **Auto(Advanced)** in **Head Posi. Adj.** once.
*2: Available if **Adj. Priority** is **Automatic** or **Print Quality**.
*3: Available if **Adj. Priority** is **Automatic** or **Print Length**.
*4: Not displayed if **IPv4 Mode** is **Manual**.
*5: Not displayed if **Auto Detect** is **On**.
*6: Follows the setting in **Date Format**.
*7: Restrictions apply if a password is configured using **Change Password** in the **Admin. Menu**.
Viewing and configuration is possible for administrators, and only viewing for other users.
*8: Restrictions apply if a password is configured using **Change Password** in the **Admin. Menu**.
Viewing and configuration is possible for administrators only.
*9: Not displayed if **IPv6 Support** is **Off**.
*10: Default setting for the time to enter the power save mode/Sleep mode is recommended.
*11: Displayed as the menu during printing while printing is in progress.
*12: Not displayed in the regular menu.

Printer parts

Front 57
Side 58
Top Cover (Inside) 59
Roll Cover (Inside) 60
Carriage 60
Ink Tank Cover (Inside) 61

Front

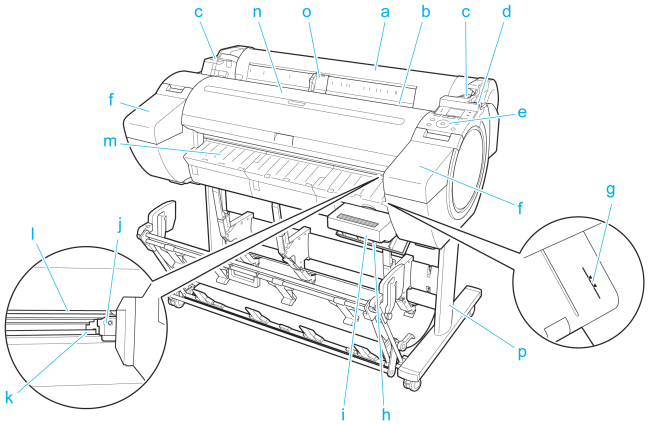

a Roll Cover
Open this cover to load rolls. (See "Roll Cover (Inside).") ➔P.60

b Paper Feed Slot
When loading paper, insert it here.

c Roll Ledge
When loading rolls, rest the Roll Holder here before loading it in the Roll Holder Slot.

d Release Lever
When releasing the Paper Retainer, push this lever back.

e Control Panel
Use this panel to operate the printer and check the printer status. (See "Control Panel.") ➔P.46

f Ink Tank Cover
Open this cover to replace an Ink Tank. (See "Ink Tank Cover (Inside).") ➔P.61

g Paper Alignment Line
An orange line for alignment of paper.

h Maintenance Cartridge Cover
Open this cover to replace the Maintenance Cartridge.

i Maintenance Cartridge
Absorbs ink used for maintenance purposes such as head cleaning. (Replace the cartridge when it is full.)

j Cutter Unit
A round-bladed cutter for automatic roll cutting.

k Cutter Rail
The Cutter Unit passes over this rail to cut paper.

l Output Tray

All printed documents are ejected from this slot.

m Ejection Guide

Supports output paper.

n Top Cover

Open this cover to install the Printhead and remove any jammed paper from inside the printer, as needed. (See "Top Cover (Inside).") ➔P.59

o Width Guide

When loading the sheets , move the guide to match the paper size.

p Stand

A stand that holds the printer. Equipped with casters to facilitate moving it. (See "Stand.") ➔User's Guide

Side

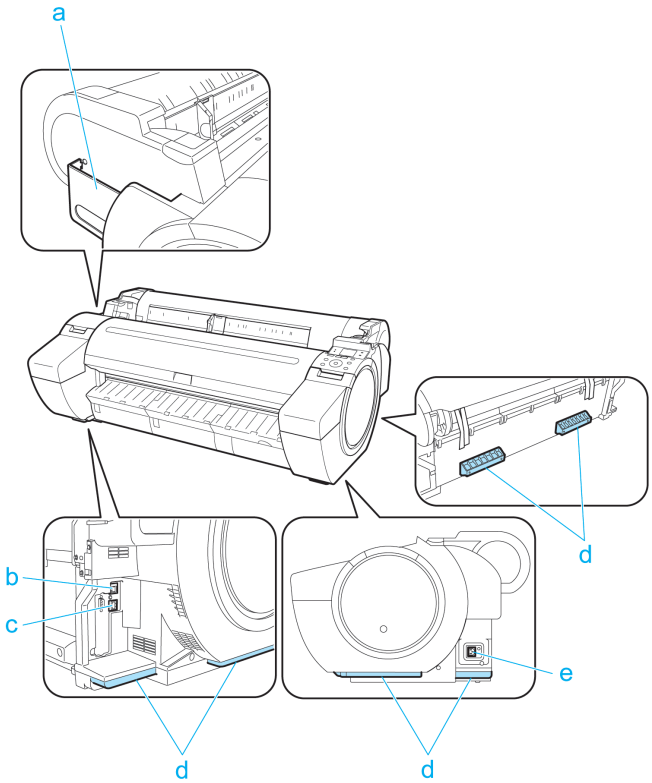

a Manual Pocket

Store printer manuals in this pocket.

b Ethernet Port

Connect an Ethernet cable to this port.

c USB Port

Connect a USB cable to this port. The printer is compatible with Hi-Speed USB connections.

d Carrying Handles

When carrying the printer, have three people hold it by these handles on the back at both ends.

e Power Supply Connector

Connect the power cord to this connector.

Top Cover (Inside)

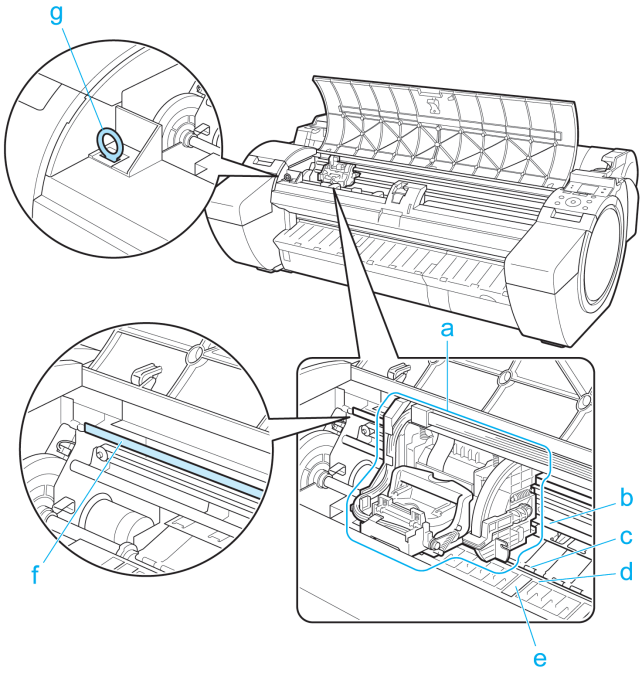

a Carriage

Moves the Printhead. The carriage serves a key role in printing. (See "Carriage.") ➔P.60

b Carriage Shaft

The Carriage slides along this shaft.

c Paper Retainer

Important in supplying the paper. This retainer holds paper as it is fed.

d Platen

The Printhead moves across the platen to print. Vacuum holes on the platen hold paper in place.

e Borderless Printing Ink Grooves

For catching ink outside the edges of paper during borderless printing.

f Linear Scale

The linear scale serves a key role in detecting the Carriage position. Be careful not to touch this part when cleaning inside the Top Cover or clearing paper jams.

g Cleaning Brush

When cleaning inside the printer under the Top Cover, use this brush to sweep away paper dust on the Platen.

Roll Cover (Inside)

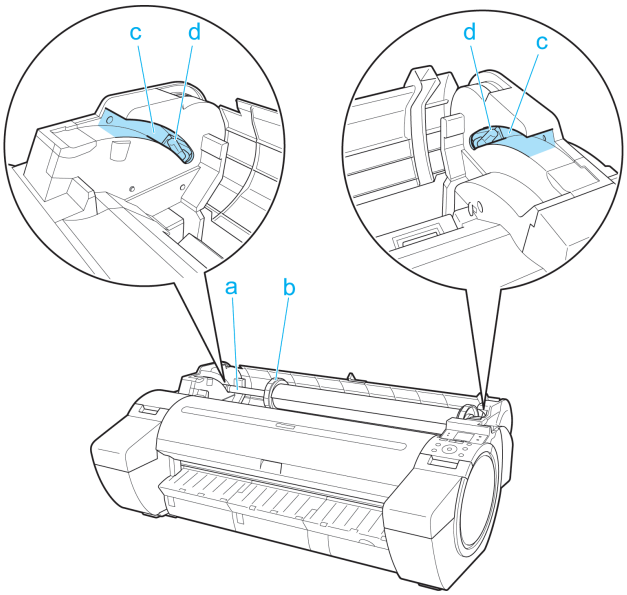

a Roll Holder
Load the roll on this holder.

b Holder Stopper
Secure rolls on the Roll Holder with this part.

c Roll Loading Slots
Slide the Roll Holder along these slots.

d Roll Holder Slot
Load the Roll Holder into this holder slot.

Carriage

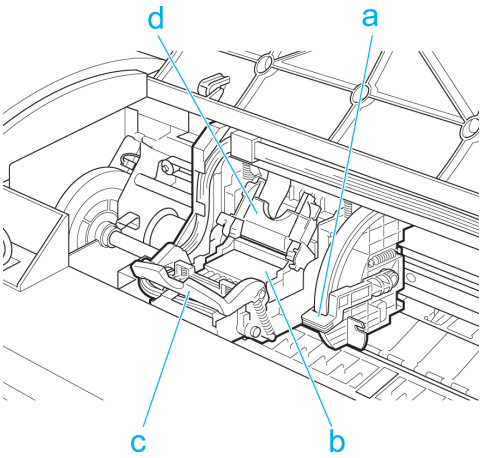

a Angle Adjustment Lever
Use this lever to fine-tune the printer to correct misalignment of printed lines.

b Printhead
The printhead is equipped with ink nozzles. The carriage serves a key role in printing.

c Printhead Fixer Lever
Locks the Printhead Fixer Cover.

d Printhead Fixer Cover
Holds the Printhead in place.

Ink Tank Cover (Inside)

Left Side

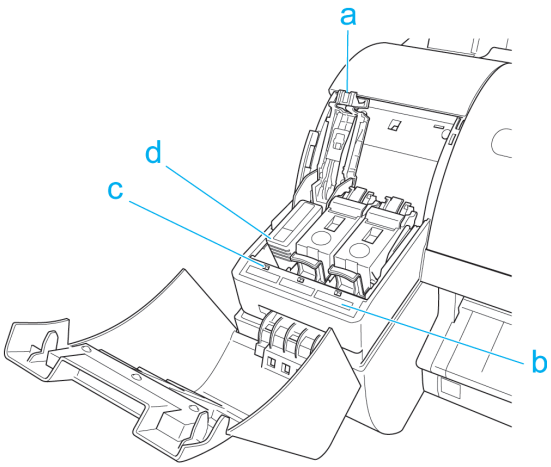

Right Side

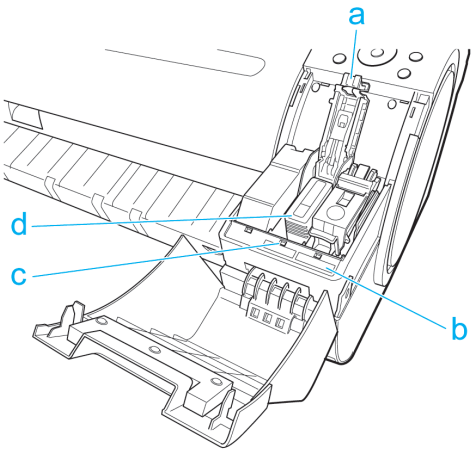

a Ink Tank Lock Lever
A lever that locks the Ink Tank in place and protects it. Lift and press down the lever when replacing an Ink Tank.

b Ink Color Label
Load an Ink Tank that matches the color and name on this label.

c Ink Lamp (Red)
Indicates the state of the Ink Tank as follows when the Ink Tank Cover is opened.

- On
  The Ink Tank is installed correctly.
- Off
  No Ink Tank is installed, or the ink level detection function has been released.
- Flashing Slowly
  Not much ink is left.
- Flashing Rapidly
  There is no ink left.

d Ink Tank
Cartridges of ink in various colors.

Printer Relocation

Preparing to Transfer the Printer

Preparing to Transfer the Printer 62
Reinstalling the Printer 65

Preparing to Transfer the Printer

To protect the internal parts in transit, always follow these steps before transferring the printer to a new location. Refer to the Setup Guide for details on packing the printer and installing it after transfer.

Important
- Avoid tilting the printer excessively in transit. This may cause ink in the printer to leak and cause stains.

Note
- When you execute prepare to transfer, ink is drawn into the Maintenance Cartridge. Depending on the amount of free space in the mounted Maintenance Cartridge, you may need to replace it with a new one at this time. Note that replacement is not required if there is 80% or more free space. (See "Checking the Remaining Maintenance Cartridge Capacity.") ➔User's Guide
- Depending on the state of the printer, part replacement may be necessary when preparing to transfer the printer (that is, when you execute the printer menu item to prepare for transfer).

Remove paper

1 Remove the paper.

- Rolls (See "Removing the Roll from the Printer.") ➔P.18
- Sheets (See "Removing Sheets.") ➔P.23

Access the **Prep.MovePrinter** menu

1 If a message instructing you to replace the Maintenance Cartridge is displayed on the Display Screen, replace the Maintenance Cartridge.
(See "Replacing the Maintenance Cartridge.") ➔P.37

2 On the **Tab Selection screen** of the Control Panel, press ◀ or ▶ to select the Settings/Adj. tab ( ).

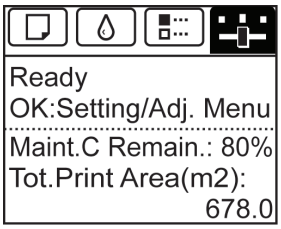

Note
- If the **Tab Selection screen** is not displayed, press the **Menu** button.

3 Press the **OK** button.
The **Set./Adj. Menu** is displayed.

4 Press ▲ or ▼ to select **Prep.MovePrinter**, and then press the **OK** button.

5 Press ▲ or ▼ to select **Standard** or **Limited**, and then press the **OK** button.
Displays the confirmation screen.

Important
- If **Limited** is selected, do not transport in low temperature environments. The ink remaining in the printer may freeze and damage the printer.

6 Press ▲ or ▼ to select **Yes** (or **Execute** if **Limited** is selected), and then press the **OK** button.
Ink is now drawn into the Maintenance Cartridge.
Once preparations are finished, a message on the Display Screen requests you to open the Ink Tank Cover.

Important
- Do not remove the Maintenance Cartridge except when the message for replacing it is displayed.
  If you remove the Maintenance Cartridge while ink is being drawn out, the ink may leak out.
- If consumables must be replaced, the message "**Consumables must be replaced. Call for service.**" is shown on the Display Screen and preparation is not possible. If this message is displayed, press the **OK** button and contact your Canon dealer for assistance.

Remove the Ink Tank

1 Open the Ink Tank Cover.

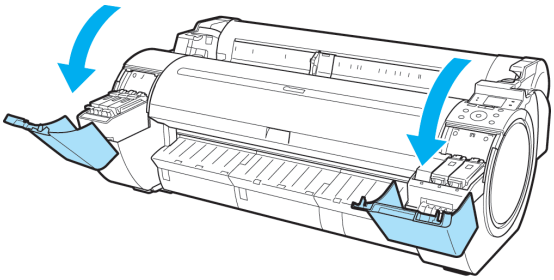

2 Pressing the tip of the Ink Tank Lock Lever horizontally, lift the Ink Tank Lock Lever to release the lock.

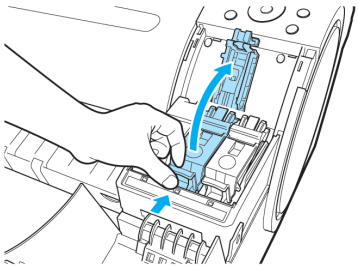

3 Holding the ink tanks by the grips, remove them.

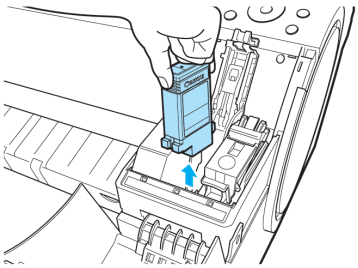

Important

- Store the ink tanks you removed with the ink holes (a) facing up. Otherwise, ink may leak and cause stains.

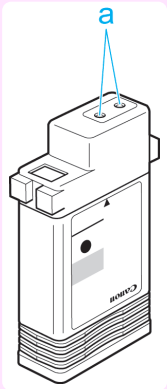

4 Repeat steps 2 and 3 to remove all ink tanks.

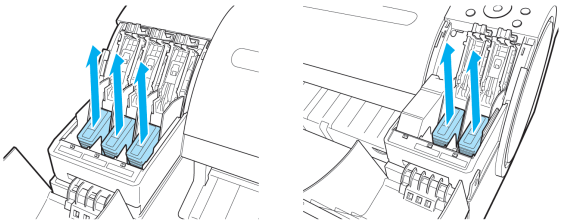

5 Push all ink tank lock levers closed until they click into place.

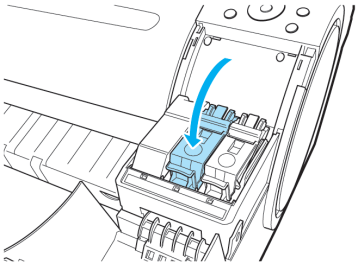

6 Close the Ink Tank Cover.
Ink is now drawn into the Maintenance Cartridge.

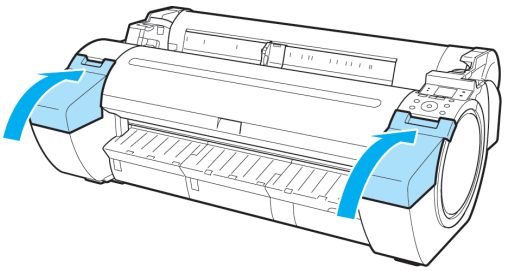

Important

- Do not remove the Maintenance Cartridge except when the message for replacing it is displayed. If you remove the Maintenance Cartridge while ink is being drawn out, the ink may leak out.

7 When the processing is complete, "**Completed! Turn Power Off!!**" is displayed. Press the **Power** button to turn the power off.

Pack the printer

1 Disconnect the power cord and interface cable.

> **Important**
> - Turn off the printer before you unplug it. It may damage the printer if you unplug it before it is off and transfer it in that state. If you accidentally unplug the printer, plug it in again, reinstall the ink tanks, and follow this procedure again.

2 Tape down printer covers to secure them, in the reverse order of tape removal during installation.

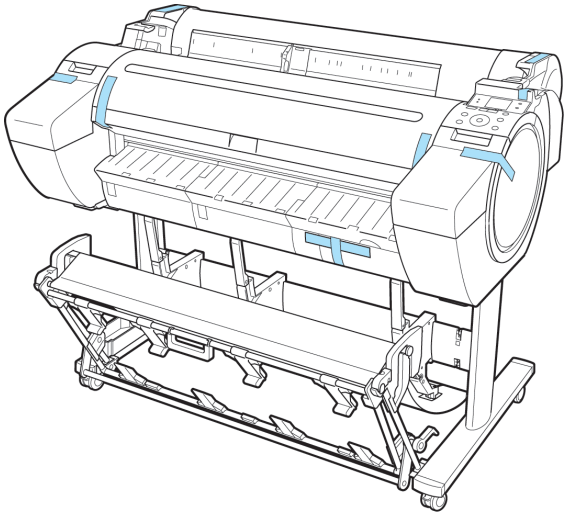

3 Remove the Stand by reversing the installation procedure, when it was attached to the printer.

4 Disassemble and repackage the Stand by following the installation procedure in reverse.

5 Repack the Roll Holder, Holder Stopper, and printer in shipping materials, and then package them in a shipping box.

Reinstalling the Printer

The basic workflow for reinstalling the printer is as follows.
For detailed instructions, see the Setup Guide.

Assemble the stand

1 Referring to the Printer Stand Setup Guide, assemble the Stand.

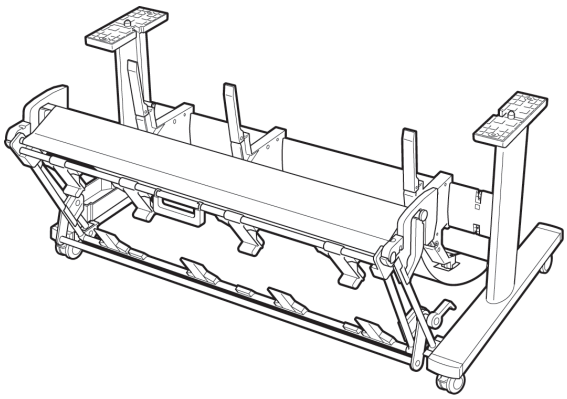

Caution

- The Stand must be assembled by at least two people on a flat surface. Attempting assembly by yourself poses a risk of injury or bending the Stand.
- When assembling the Stand, lock all four of the casters. Attempting to move the stand when the casters are not locked poses a risk of injury or damage to the location site.
- Before moving the assembled stand, lift the support rod to the position shown (a) and unlock all four casters. Moving the stand with the support rod lowered or the casters locked may cause injury or damage the area of installation or basket cloth.

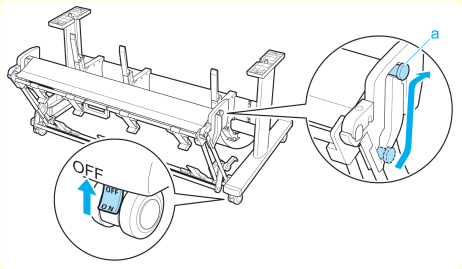

Install the printer

1 Mount the printer on the assembled Stand and tighten the screws firmly.

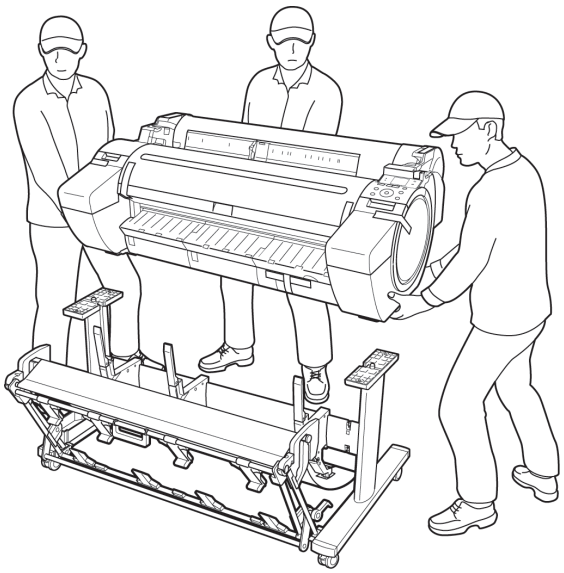

Caution

- Moving the printer requires at least three people. Be careful to avoid back strain and other injuries.
- When moving the printer, firmly grasp the Carrying Handles. The printer may be unsteady if you hold it at other positions, which poses a risk of injury from dropping the printer.

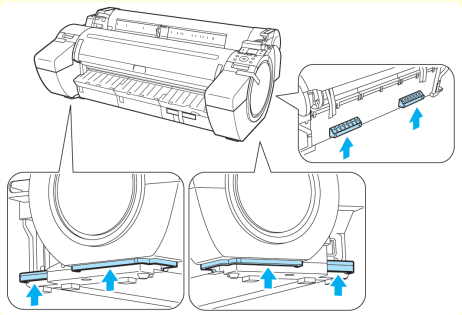

- When placing the printer on the Stand, lock all four of the casters of the Stand. Attempting to place the printer on the Stand while the casters are not locked poses a risk of injury.

2 Remove tape and packaging material attached to the printer.

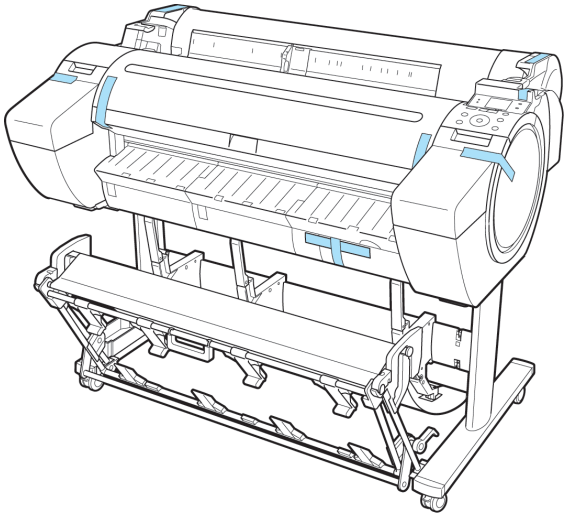

3 Connect the power cord to the Power Supply Connector on the right side of the printer.

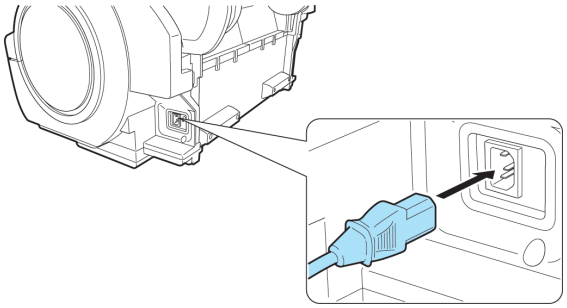

4 Plug the power cord into the outlet.

5 Press the power button to turn the printer on. Instructions are displayed on the Display Screen.

6 Open the Ink Tank Cover and install the ink tanks.

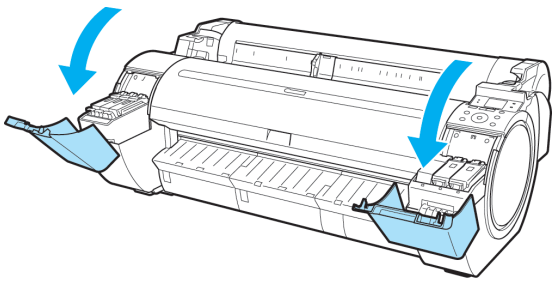

7 Load the Roll Media on the Roll Holder.
(See "Attaching the Roll Holder to Rolls.") ➔P.12

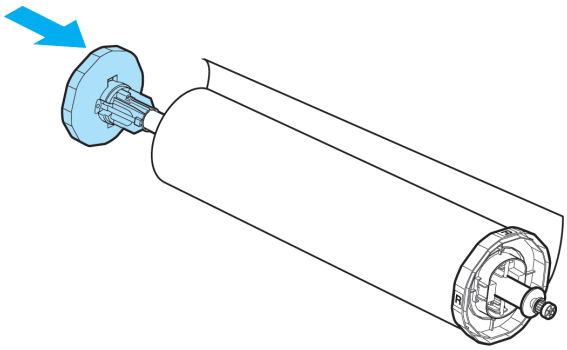

8 Load the Roll Media in the printer.
(See "Loading Rolls in the Printer.") ➔P.15

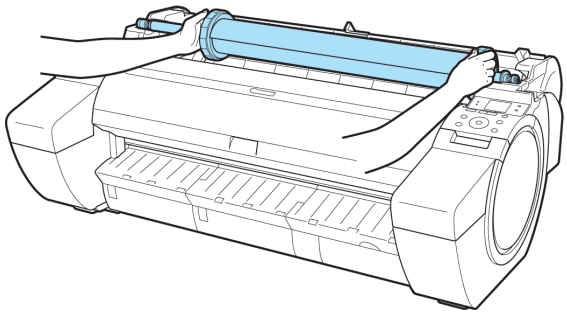

9 Install the software.
Note that the driver installation procedure varies depending on the type of connection.
(See "Installing the Software (Windows).") ➔P.69
(See "Installing the Software (Mac OS).") ➔P.71

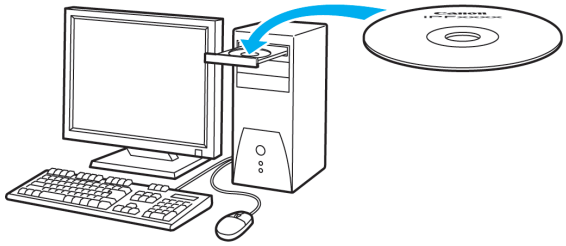

Important
- When the printer is connected to a network (via TCP/IP), the printer's IP address may be changed if you reinstall the printer.
In this case, be sure to reconfigure the printer's IP address.

Software Installation

Installing the Printer Driver (Windows)

Installing the Software

The basic instructions for installing the software are as follows.
For detailed instructions, see the Setup Guide.

Supported connection methods

The printer driver works over USB or network (TCP/IP) connections.
The driver installation procedure varies depending on the type of connection.
Follow these steps to install the software.

Installing the Software (Windows)

Important

- When setting up a USB connection, connect the USB cable during printer driver installation following the instructions displayed.
  If you accidentally connect the USB cable first, the printer driver may not be installed correctly.
- When the printer is connected to a network (via TCP/IP), the printer's IP address may be changed if you reinstall the printer. In this case, be sure to reconfigure the printer's IP address.

1 Turn the computer on.
When setting up a TCP/IP (network) connection, after making sure the printer is on, connect the LAN cable to the Ethernet port on the left side of the printer and to your network hub port.

2 Insert the provided User Software CD-ROM for the appropriate operating system in the CD-ROM drive.

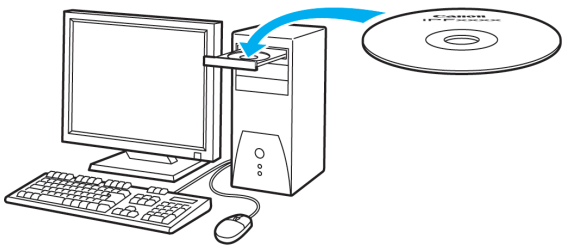

3 Follow the instructions displayed to complete installation.

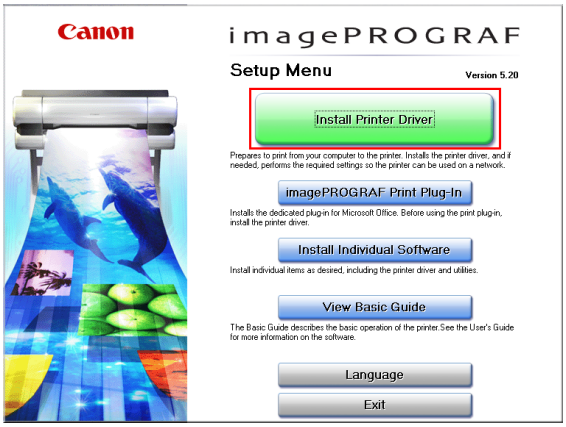

Important

- For USB connections, when the dialog box at right is displayed, make sure the printer is on and connect the printer and computer with the USB cable.

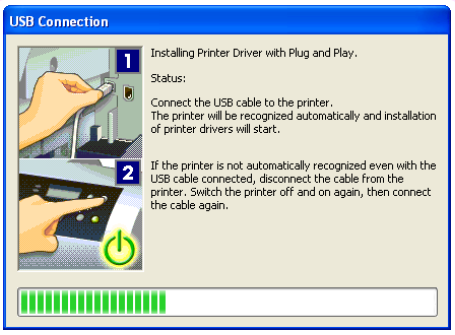

4 On the **Finish** window, select **Restart my computer now** and click **Restart**.
Software settings take effect after the computer restarts.

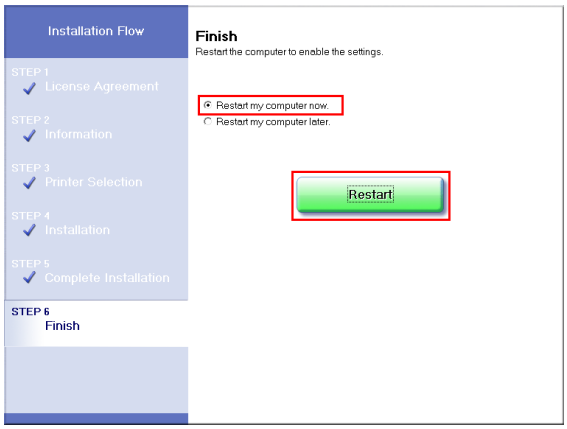

Installing the Printer Driver (Mac OS)

Installing the Software

The basic instructions for installing the software are as follows.
For detailed instructions, see the Setup Guide.

Supported connection methods

The printer driver works over USB or network (Bonjour or IP) connections.
Follow these steps to install the software.

Installing the software

Important
- When the printer is used over a network, the printer's IP address may be changed if you reinstall the printer. In this case, be sure to reconfigure the printer's IP address.

1 After making sure the computer and printer are not connected by a cable, turn the computer on.

2 Insert the provided User Software CD-ROM for the appropriate operating system in the CD-ROM drive.

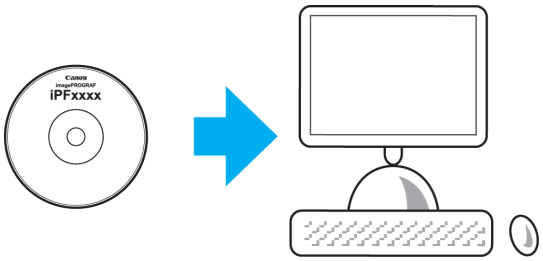

3 Follow the instructions displayed to complete installation.

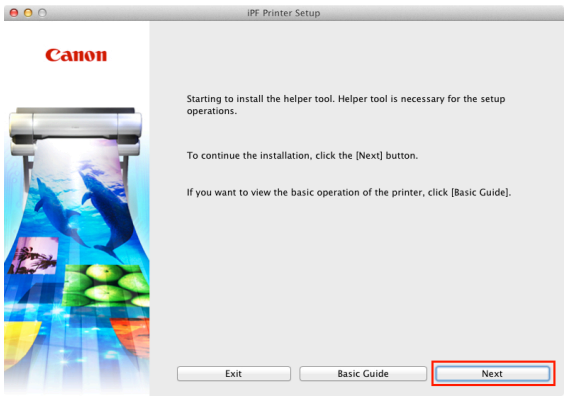

Important
- When the dialog box at right is displayed, make sure the printer is on and connect the printer and computer with the cable.

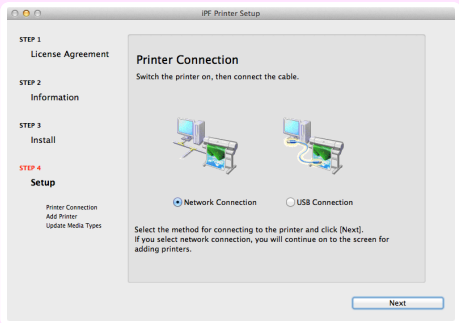

4 After installation, click **Exit**.

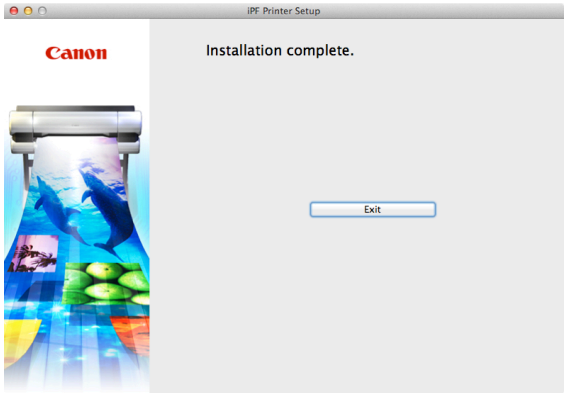

Convenient Printer Driver Features

Print Preview 73
Rotate Page 90 degrees (Converse Paper) 75
Borderless Printing 76
Large-Format Printing 77
Enlarged/Reduced Printing 78

Print Preview

Using the print preview function enables the following.

- Check an image of the document as arranged on the paper, in the position it will be printed.
  You can reduce printing costs by checking how documents will be printed beforehand, without the need to print them.
- Change the layout orientation relative to the paper.
  You can save paper by correcting the direction in which the document is arranged on the paper, if necessary.

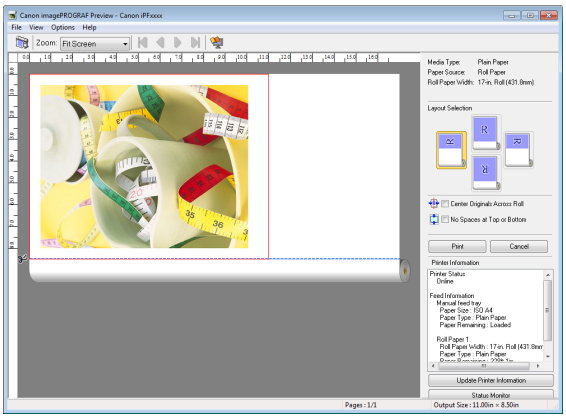

Configuring Settings in Windows

1. Access the **Main** sheet.
2. Select the **Open Preview When Print Job Starts** check box.
3. Check details in the **Information** dialog box displayed next and click **OK** to close the **Information** dialog box.
4. After you click **OK**, when you print a job, the **imagePROGRAF Preview** window will be displayed.

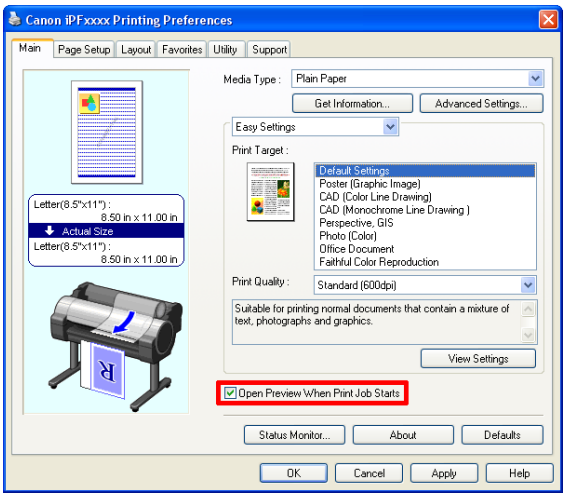

Note

- Under some settings and in some environments, PageComposer may be started.

Configuring Settings in Mac OS

1. In the **File** menu of the source application, choose the appropriate menu item for printer settings to display the **Print** dialog box.
2. Access the **Main** pane.
3. Select the **Print Preview** check box.
4. After you click **Print**, the **Canon imagePROGRAF Preview** window will be displayed.

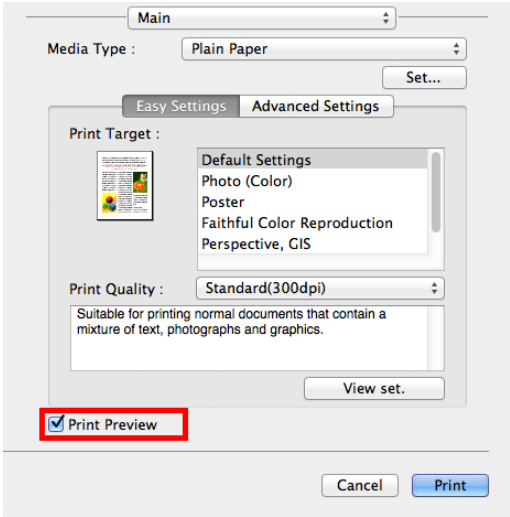

Rotate Page 90 degrees (Converse Paper)

You can conserve roll paper by specifying particular settings as suitable for your original.
When you print an original that is in portrait orientation, the original is rotated 90 degrees before printing if it fits within the roll width. This enables you to conserve paper.

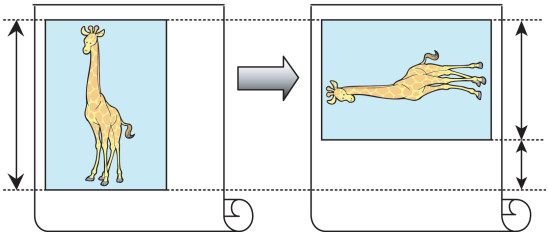

Note
- If the page would exceed the roll paper width after rotation, you can use this function with Scale to fit Roll Paper Width to print rotated pages.

Configuring Settings in Windows

1. Access the **Page Setup** sheet.
2. Select the **Rotate Page 90 degrees (Conserve Paper)** check box.

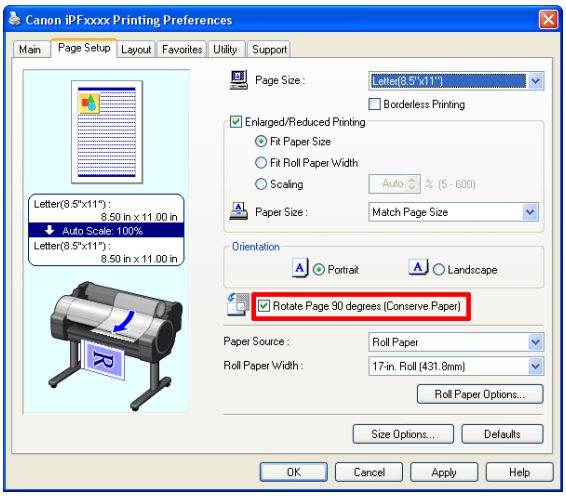

Configuring Settings in Mac OS

1. Access the **Page Setup** pane.
2. Select the **Rotate Page 90 degrees** check box.

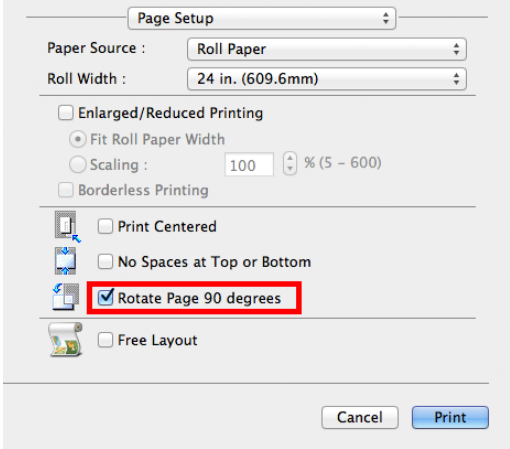

Borderless Printing

In regular printing, a margin required by the printer is added around the original. With borderless printing, you can print documents without the margin, so that the printed image covers the entire surface of the paper.
Borderless printing is only available with rolls.

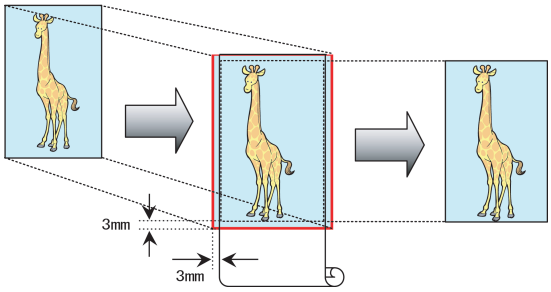

Configuring Settings in Windows

1. Access the **Page Setup** sheet.
2. Select the **Borderless Printing** check box to display the **Information** dialog box.
3. Click the width of the loaded roll in the **Roll Paper Width** list.
4. Click **OK** to close the **Information** dialog box.
5. Select **Fit Paper Size**, **Scale to fit Roll Paper Width**, or **Print Image with Actual Size**.

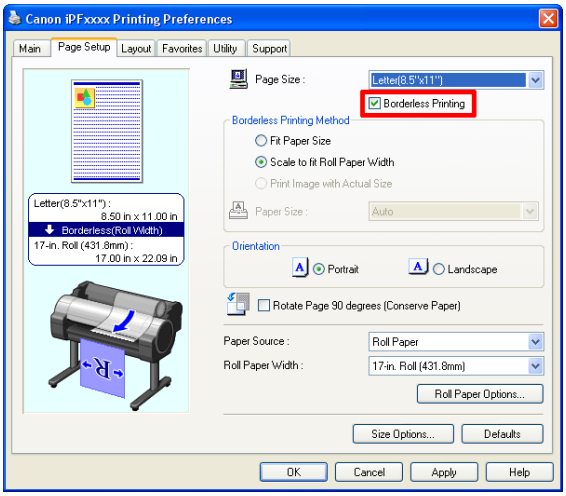

Configuring Settings in Mac OS

1. Access the **Page Setup** pane.
2. Click the width of the loaded roll in the **Roll Width** list.
3. Select the **Enlarged/Reduced Printing** check box.
4. Select the **Borderless Printing** check box.

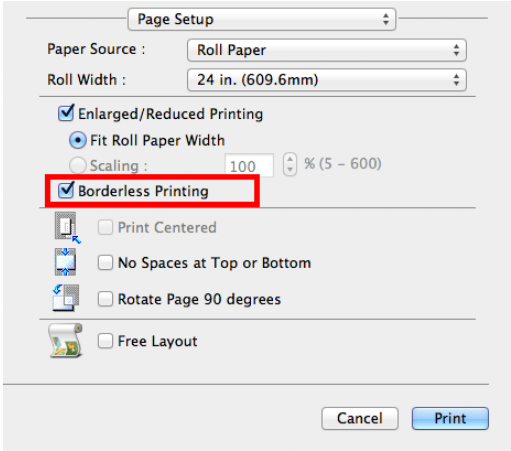

Large-Format Printing

You can create vertical or horizontal banners by printing originals in banner formats on rolls.
Originals created in Microsoft Word or other applications in your preferred size can be enlarged to fill the width of roll paper by completing simple printer driver settings.
The printer supports roll printing up to a maximum length of 18.0 m (19.7 yd).

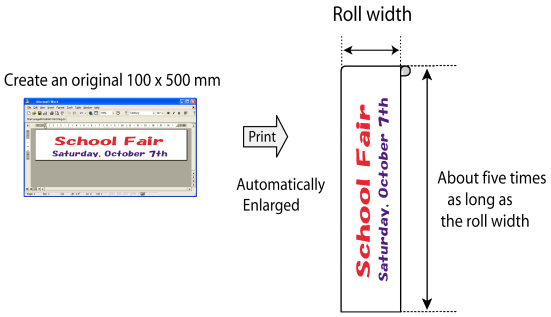

Configuring Settings in Windows

1. Access the **Page Setup** sheet.
2. Click **Size Options** and register the original size.
3. Select the **Enlarged/Reduced Printing** check box.
4. After you click **Fit Roll Paper Width**, the **Information** dialog box is displayed.
5. Click the width of the loaded roll in the **Roll Paper Width** list, and then click **OK**.

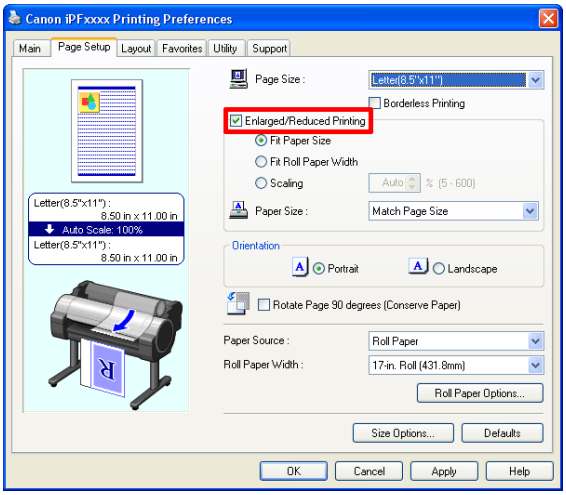

Configuring Settings in Mac OS

1. Access the **Page Setup** pane.
2. Click the width of the loaded roll in the **Roll Width** list.
3. Select the **Enlarged/Reduced Printing** check box.
4. Click **Fit Roll Paper Width**.

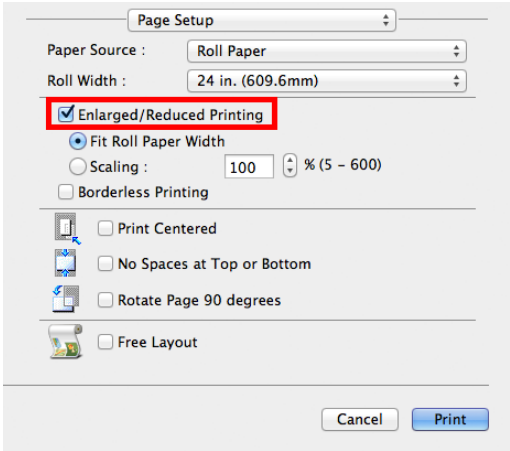

Enlarged/Reduced Printing

Originals can be printed at larger or smaller sizes, as desired.

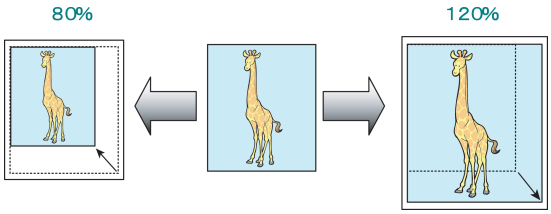

Configuring Settings in Windows

1. Access the **Page Setup** sheet.
2. Click the width of the loaded roll in the **Roll Paper Width** list.
3. In the **Page Size** list, click the size of the original as specified in the source application.
4. Select the **Enlarged/Reduced Printing** check box.
5. Select **Fit Paper Size**, **Fit Roll Paper Width**, or **Scaling**.

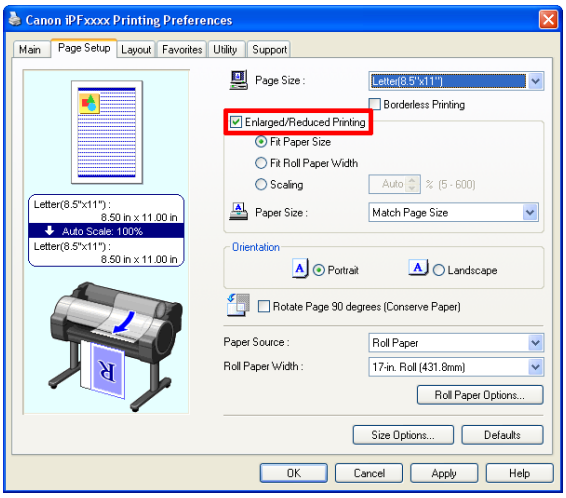

Configuring Settings in Mac OS

1. Access the **Page Setup** pane.
2. Click the width of the loaded roll in the **Roll Width** list.
3. Select the **Enlarged/Reduced Printing** check box.
4. Select either **Fit Roll Paper Width** or **Scaling**.

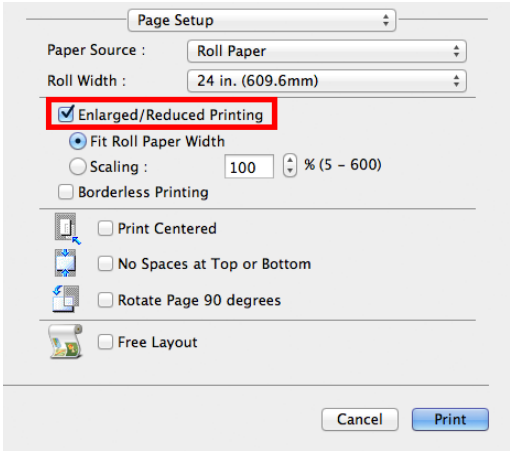

Adjustments for Better Print Quality

Adjusting the Printhead

Automatic Adjustment to Straighten Lines and Colors

If printed vertical lines are warped or colors are out of alignment, execute **Head Posi. Adj.** to adjust the Printhead alignment.
There are two modes for automatic Printhead adjustment: **Auto(Standard)** and **Auto(Advanced)**.
Auto(Standard) will fix most slight image distortion or color misalignment, but if not, try **Auto(Advanced)**.
Use **Auto(Standard)** or **Auto(Advanced)** to have the printer print and read a test pattern for automatic adjustment of the Printhead.

Important
- This function is not available with Tracing Paper, Translucent Matte Film, or Clear Film.
- If adjustment is not possible as expected using special media, try another type of paper, or try **Manual** adjustment.
  (See "Manual Adjustment to Straighten Lines and Colors.") ➔User's Guide

Note
- Because the results of adjustment vary depending on the type of paper used for adjustment, use the same type of paper as you will use for printing.
- Use **Auto(Standard)** if you have switched to another type of paper or if you want the boundaries between colors to appear as clear as possible.
- Use **Auto(Advanced)** to fine-tune the space between nozzles or colors if you have switched the printhead or if clearer printing is required. We recommend **Auto(Advanced)** for printing at the highest level of quality.

Paper to Prepare

When Using Rolls	An unused roll at least 10 inches wide
When Using Sheets	**Auto(Standard)** : One sheet of unused paper of at least A4/Letter size **Auto(Advanced)**: Six sheets of unused paper of at least A4/Letter size (or one sheet when using A2 or larger)

Perform adjustment as follows.

1 Load the paper.

- Attaching the Roll Holder to Rolls ➔P.12
- Loading Rolls in the Printer ➔P.15
- Loading Sheets in the Printer ➔P.21

Important
- Always make sure the loaded paper matches the type of paper specified on the printer. Adjustment cannot be completed correctly unless the loaded paper matches the settings.

2 On the **Tab Selection screen** of the Control Panel, press ◀ or ▶ to select the Settings/Adj. tab ( ).

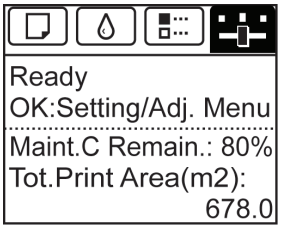

Note
- If the **Tab Selection screen** is not displayed, press the **Menu** button.

3 Press the **OK** button.
The **Set./Adj. Menu** is displayed.

4 Press ▲ or ▼ to select **Adjust Printer**, and then press the **OK** button.

5 Press ▲ or ▼ to select **Head Posi. Adj.**, and then press the **OK** button.

6 Press ▲ or ▼ to select **Auto(Standard)** or **Auto(Advanced)**, and then press the **OK** button.
A test pattern is printed for adjustment.
Adjustment is now finished if you have printed on a roll or a sheet of A2 size or larger.

7 If you are printing on sheets smaller than A2 size for **Auto(Advanced)**, a confirmation message is displayed requesting you to continue printing. Press the **OK** button and follow the instructions displayed.

Adjusting the feed amount

Selecting a Feed Amount Adjustment Method 81
Adjusting Line Length 82

Selecting a Feed Amount Adjustment Method

Methods of adjusting the amount paper is fed are set in **Adj. Priority**.
Adjust **Adj. Priority** to suit your particular printing application.

- **Print Quality**: Adjusts the feed amount to reduce banding across the sheet in printed documents.
  Adj. Quality settings are applied. When **Adj. Fine Feed** is executed, the **Adj. Fine Feed** settings are applied in addition to the **Adj. Quality** settings.
- **Print Length**: Adjusts the feed amount for better accuracy of lines in printed documents.
  The settings of **A:High** or **B:Standard/Draft** in **Adjust Length** are applied.
- **Automatic**: **Print Quality** or **Print Length** is selected, depending on **Print Priority** as selected in the printer driver at the time of printing.
  Image or **Office Document**: **Print Quality** is selected.
  Line Drawing/Text: **Print Length** is selected.

Note
- Either **A:High** or **B:Standard/Draft** in the **Adjust Length** menu is applied, depending on printer driver settings at the time of printing.
- If you have selected **Easy Settings** in the printer driver, follow these steps to confirm the **Print Priority** setting.
  - Windows: Click **View Settings** on the **Main** tab to display the **View Settings** dialog box.
  - Mac OS: Click **View set.** on the **Main** pane to display the **View set.** dialog box.

Follow these steps to configure the settings.

1 Load the paper.

- Attaching the Roll Holder to Rolls ➔P.12
- Loading Rolls in the Printer ➔P.15
- Loading Sheets in the Printer ➔P.21

2 On the **Tab Selection screen** of the Control Panel, press ◀ or ▶ to select the Settings/Adj. tab ( ).

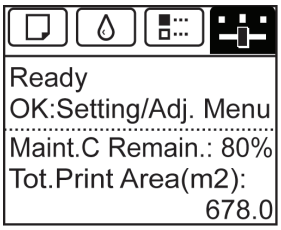

Note
- If the **Tab Selection screen** is not displayed, press the **Menu** button.

3 Press the **OK** button.
The **Set./Adj. Menu** is displayed.

4 Press ▲ or ▼ to select **Adjust Printer**, and then press the **OK** button.

5 Press ▲ or ▼ to select **Feed Priority**, and then press the **OK** button.

6 Press ▲ or ▼ to select **Adj. Priority**, and then press the **OK** button.

7 Press ▲ or ▼ to select **Automatic**, **Print Quality**, or **Print Length**, and then press the **OK** button.

Adjusting Line Length

To ensure that lines in CAD drawings are printed at exactly the right length, use **Adjust Length** to adjust the amount that paper is advanced.
There are two options in **Adjust Length** : **AdjustmentPrint** and **Change Settings**.

- **AdjustmentPrint**
  After a test pattern is printed, you will measure the discrepancy based on the results of printing.
- **Change Settings**
  No test pattern is printed. Instead, you will measure a document already printed to determine the discrepancy.

Additionally, two modes are available in both **AdjustmentPrint** and **Change Settings** : **A:High** or **B:Standard/Draft**. Choose the mode that suits your particular printing application.

- **A:High**
  This setting is applied when **Highest** or **High** is selected in **Print Quality** in the printer driver.
- **B:Standard/Draft**
  This setting is applied when **Standard** or **Fast** is selected in **Print Quality** in the printer driver.

Note
- Always check the **Adj. Priority** values before using **Adjust Length**. (See "Selecting a Feed Amount Adjustment Method.") ➔P.81
- Use paper of the same type and size for adjustment as you will use for printing.

Paper to Prepare

When Using Rolls	• An unused roll at least 10 inches wide • High-precision ruler
When Using Sheets	• One sheet of unused paper of at least A4/Letter size • High-precision ruler

Perform adjustment as follows.

1 Load the paper.

- Attaching the Roll Holder to Rolls ➔P.12
- Loading Rolls in the Printer ➔P.15
- Loading Sheets in the Printer ➔P.21

Important
- Always make sure the loaded paper matches the type of paper specified. Adjustment cannot be completed correctly unless the loaded paper matches the settings.

2 On the **Tab Selection screen** of the Control Panel, press ◀ or ▶ to select the Settings/Adj. tab ( ).

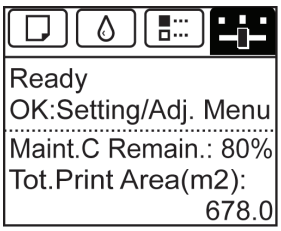

Note
- If the **Tab Selection screen** is not displayed, press the **Menu** button.

3 Press the **OK** button.
The **Set./Adj. Menu** is displayed.

4 Press ▲ or ▼ to select **Adjust Printer**, and then press the **OK** button.

5 Press ▲ or ▼ to select **Feed Priority**, and then press the **OK** button.

6 Press ▲ or ▼ to select **Adjust Length**, and then press the **OK** button.

7 Press ▲ or ▼ to select **AdjustmentPrint** or **Change Settings**, and then press the **OK** button.
When you select **AdjustmentPrint**, a test pattern is printed for you to measure the scale and calculate the discrepancy. The scale bar prints **Millimeter** in 50 mm increments and **Inch** in 1-inch increments.

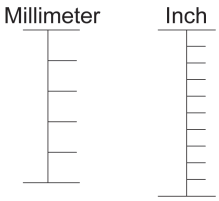

Note
- A test pattern is printed in black when you choose **A:High** or in magenta if you choose **B:Standard/Draft**.
- To cancel printing the test pattern for adjustment, hold down the **Stop** button. When "**Stop printing?**" is displayed, press ▲ or ▼ to select **Yes**, and then press the **OK** button.

8 Press ▲ or ▼ to enter the amount of discrepancy, and then press the **OK** button.
If the scale is shorter than the actual size, use a positive setting value. If it is longer, use a negative value.
The feed amount can be adjusted in 0.02% increments.

Troubleshooting

Problems Regarding Paper

Clearing Jammed Roll Paper 84
Clearing a Jammed Sheet 87
Clearing Jammed Paper (Paper Feed Slot) 90
Roll paper cannot be inserted into the paper feed slot 92
Cannot load sheets 92
Paper is not cut neatly 92
Paper is not cut 92
Depression on the leading edge is left 93
The size of clear film cannot be detected 93
Roll Paper is Continuously Ejected 93

Clearing Jammed Roll Paper

If paper from a roll becomes jammed, "**Paper jam.**" is shown on the Display Screen of the Control Panel. Remove the jammed paper as follows.

1 Positioning your hands as shown, open the Roll Cover.

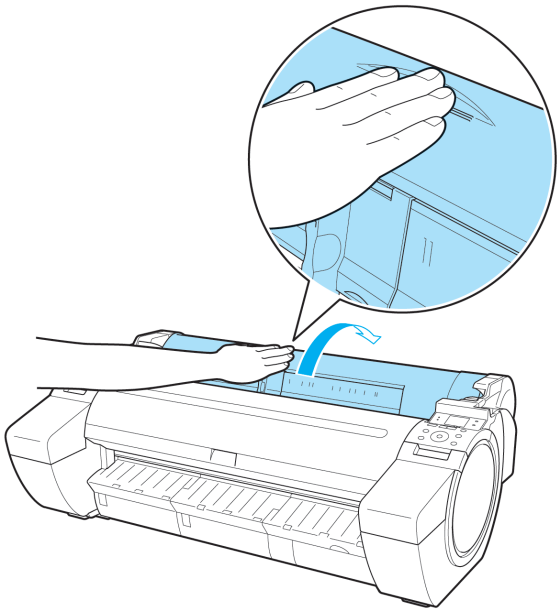

2 Cut the loaded roll paper with regular scissors or the like.

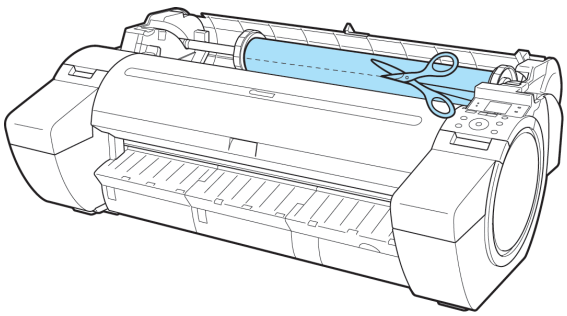

Caution
- When cutting paper, be careful to avoid injury or damage to the printer.

3 Push the Release Lever back.

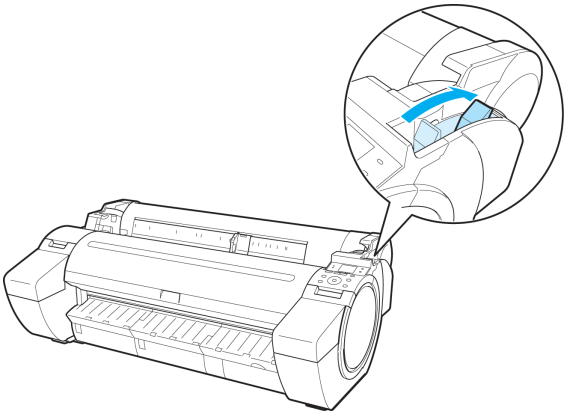

4 Remove the jammed paper.

- If paper is jammed inside the Top Cover

1. Open the Top Cover and move the Carriage to the left or right side manually, away from the jam.

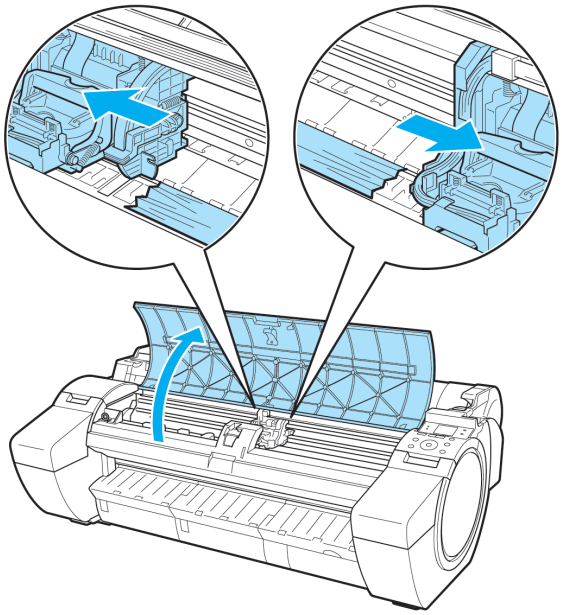

Important
- Do not move the Carriage over jammed paper. This may damage the Printhead.

2. Clear any jammed paper from inside the Top Cover.
After removing the paper, make sure there are no other scraps of paper in the printer.
3. Close the Top Cover.

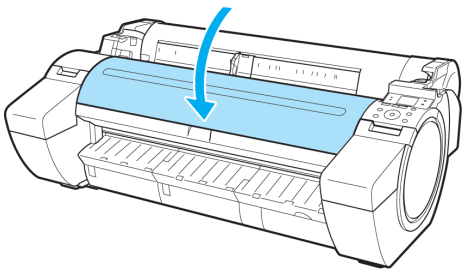

Important

- Do not touch the Linear Scale (a) or Carriage Shaft (b). This may stain your hands and damage the printer.

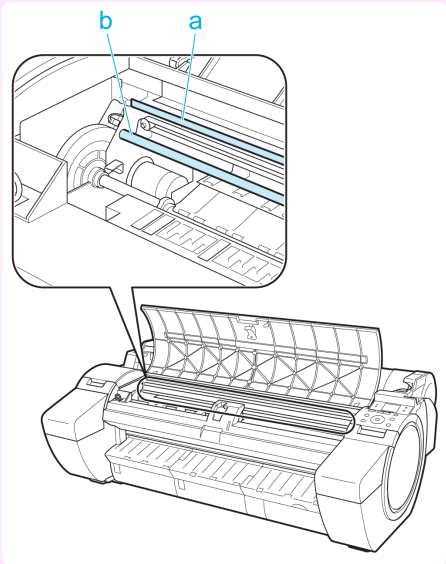

- If paper from a roll is jammed by the Paper Feed Slot

  Remove the jammed paper from the Paper Feed Slot.

  After removing the paper, make sure there are no other scraps of paper in the printer.

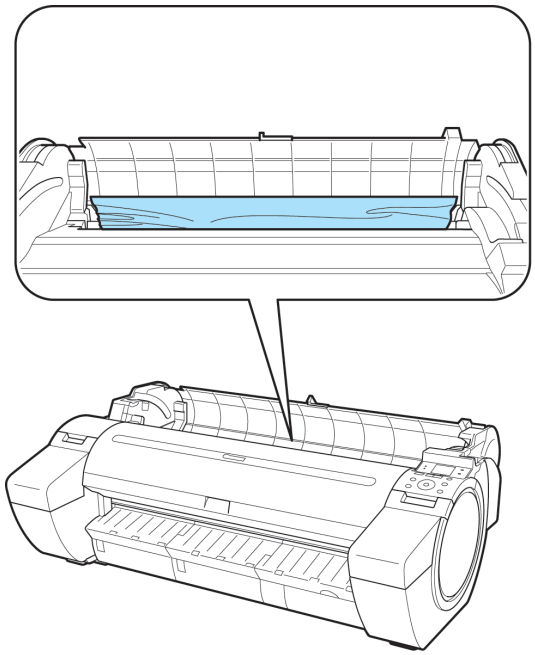

- If the paper is jammed by the Ejection Guide

  Remove the jammed paper from the Output Tray.

  After removing the paper, make sure there are no other scraps of paper in the printer.

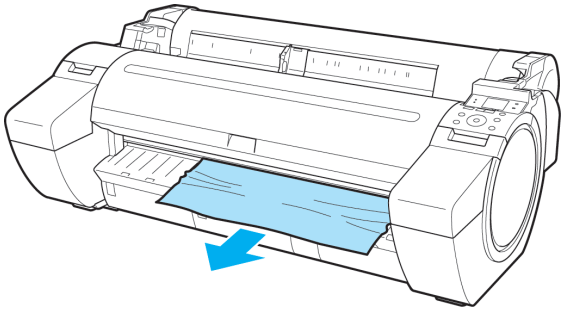

5 Pull the Release Lever forward.

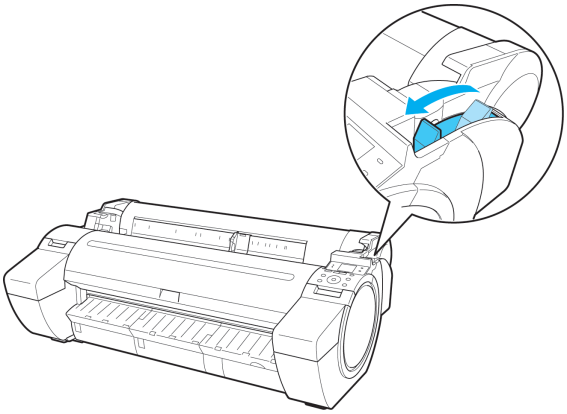

Clearing a Jammed Sheet

If a sheet becomes jammed, "**Paper jam.**" is shown on the Display Screen of the Control Panel. Remove the jammed paper as follows.

1 Push the Release Lever back.

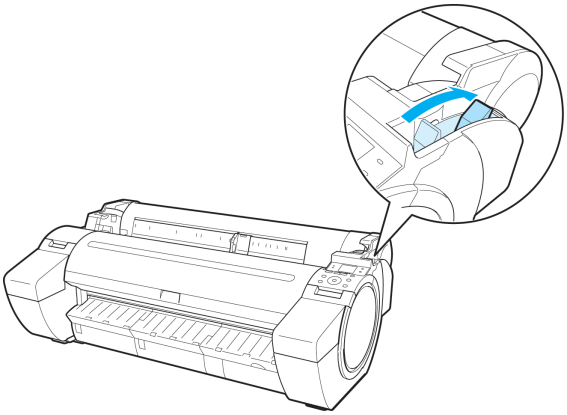

2 Remove the jammed paper.

- If paper is jammed inside the Top Cover

1. Open the Top Cover and move the Carriage to the left or right side manually, away from the jam.

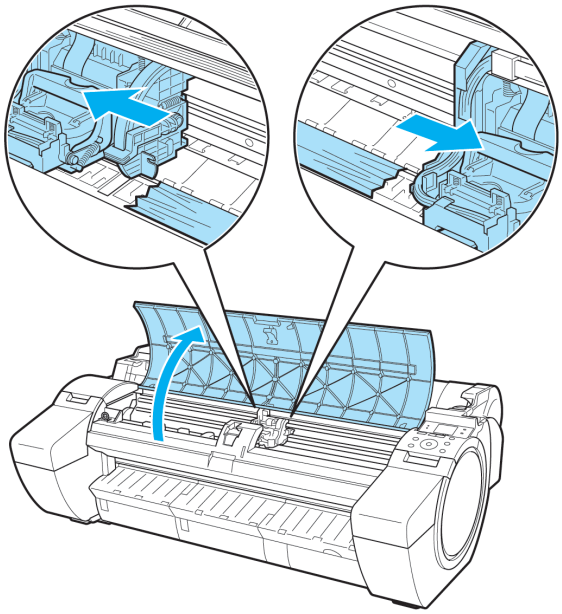

Important
- Do not move the Carriage over jammed paper. This may damage the Printhead.

2. Clear any jammed paper from inside the Top Cover.
After removing the paper, make sure there are no other scraps of paper in the printer.

3. Close the Top Cover.

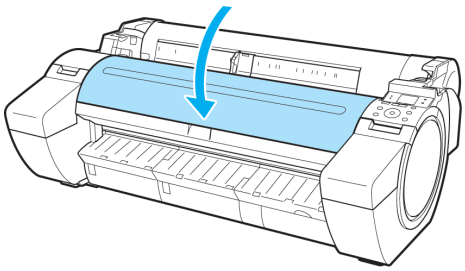

Important

- Do not touch the Linear Scale (a) or Carriage Shaft (b). This may stain your hands and damage the printer.

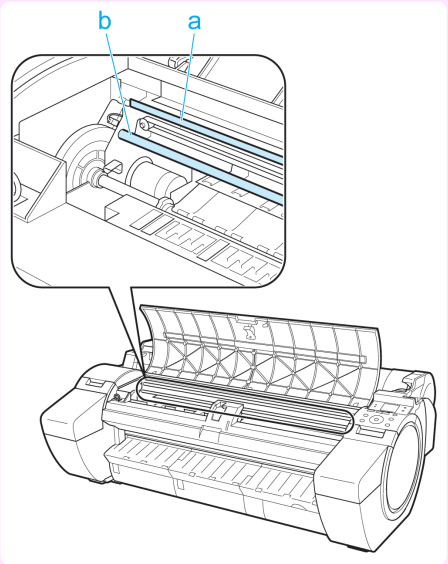

- If the paper is jammed by the Paper Feed Slot

  Remove the jammed paper from the Paper Feed Slot.

  After removing the paper, make sure there are no other scraps of paper in the printer.

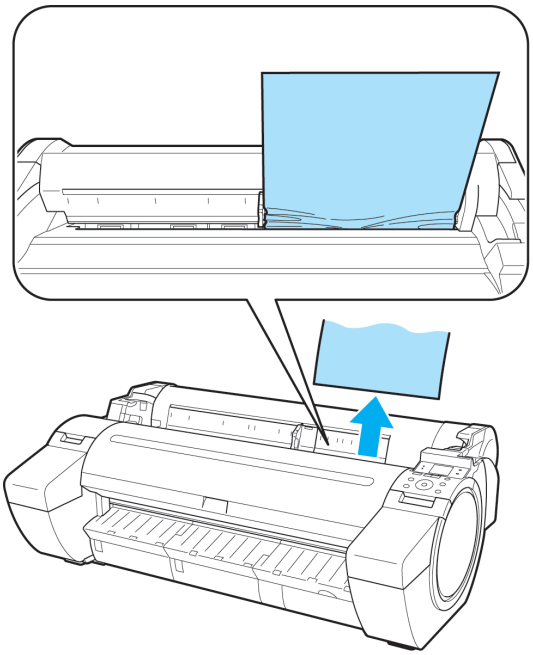

- If the paper is jammed by the Ejection Guide

  Remove the jammed paper from the Output Tray.

  After removing the paper, make sure there are no other scraps of paper in the printer.

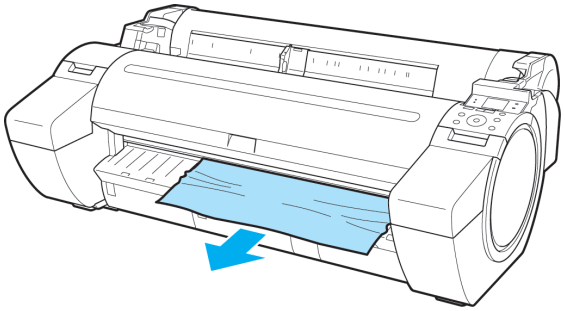

3 Pull the Release Lever forward.

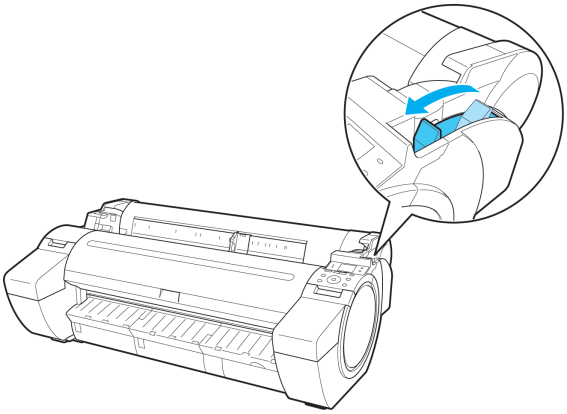

Clearing Jammed Paper (Paper Feed Slot)

Follow these steps to remove any scraps left in the Paper Feed Slot after you clear jammed sheets or roll paper.

1 Turn the printer off. (See "Turning the Printer On and Off.") ➔User's Guide

2 Push the Release Lever back.

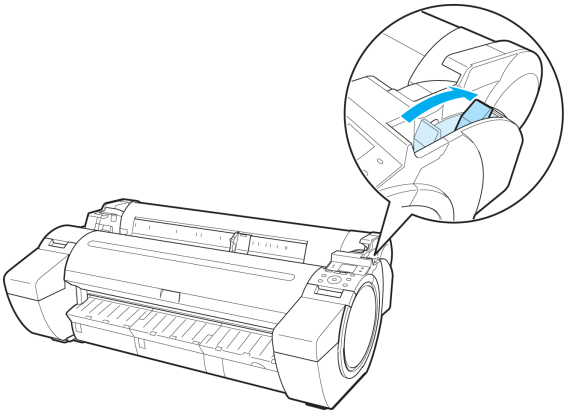

3 Positioning your hands as shown, open the Roll Cover.

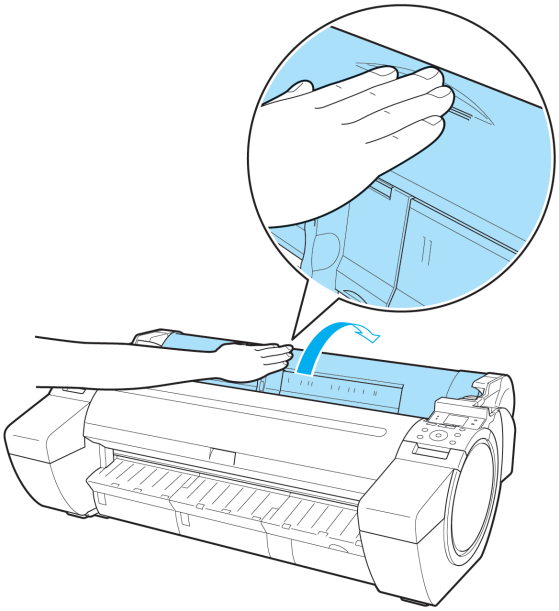

4 Fold an A4 sheet lengthwise four times and insert it through the gap of the Paper Feed Slot. Push the scrap out toward the Platen.

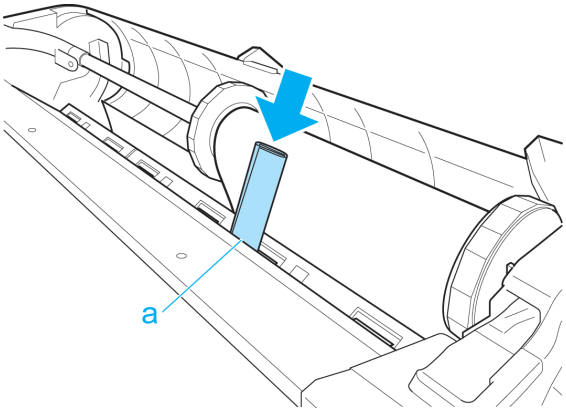

5 Remove the scrap when it is pushed out onto the Platen.

6 If any scraps remain inside the paper feed slot, repeat steps 4 and 5.

7 Holding it at the positions indicated, close the Roll Cover.

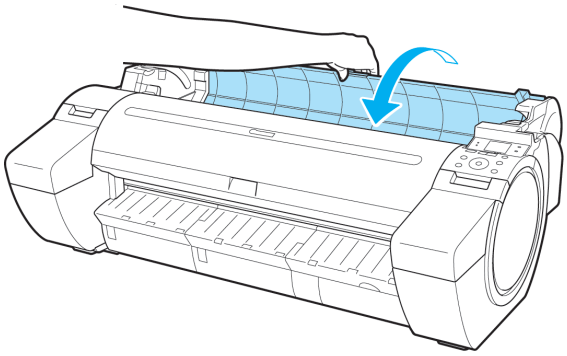

8 Pull the Release Lever forward.

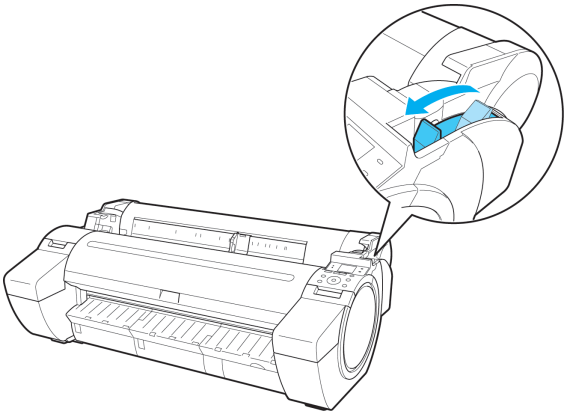

Roll paper cannot be inserted into the paper feed slot

Cause	Corrective Action
The roll paper is warped.	Straighten out curls and reload the roll.
Paper is jammed by the paper feed slot.	Remove the jammed paper. (See "Clearing Jammed Roll Paper.") ➔P.84 (See "Clearing a Jammed Sheet.") ➔P.87
The paper source selection is incorrect.	Press the **Load** button and select the paper source.

Cannot load sheets

Cause	Corrective Action
The paper source selection is incorrect.	Press the **Load** button and select the paper source.

Paper is not cut neatly

Cause	Corrective Action
The paper is bent or curled at the cut position.	Straighten out any curling by the edges of the paper.
Paper rises by the ends of the cut position before it is cut.	Reload the paper correctly.
You are using paper that cannot be cut with the Cutter Unit.	Specify **Manual** in **Cutting Mode** in the Control Panel menu and use scissors or a cutting tool to cut the roll after printing. (See "Specifying the Cutting Method for Rolls.") ➔User's Guide
Cut Speed is not configured correctly in the Control Panel menu.	Change the **Cut Speed** setting in the Control Panel menu. (See "Menu Structure.") ➔P.51
During cutting, printed documents fall out at an angle.	In the Control Panel menu, set **Cutting Mode** to **Eject**. Hold documents after printing, as they are cut. (See "Specifying the Cutting Method for Rolls.") ➔User's Guide

Paper is not cut

Cause	Corrective Action
In the printer driver, **No** or **Print Cut Guideline** is specified in **Automatic Cutting**.	Specify **Yes** in **Automatic Cutting** in the printer driver. (See "Page Setup Sheet (Windows).") ➔User's Guide (See "Paper Detailed Settings Dialog Box (Mac OS).") ➔User's Guide
In the Control Panel menu, **Cutting Mode** is set to **Eject** or **Manual**.	If the **Cutting Mode** is **Eject**, press the **Cut** button to cut the paper. If the **Cutting Mode** is **Manual**, cut rolls with scissors or the like. (See "Specifying the Cutting Method for Rolls.") ➔User's Guide

Depression on the leading edge is left

Cause	Corrective Action
Keeping a roll in the printer for a long time without printing on it may leave a depression on the leading edge.	When printing quality is most important, we recommend setting **TrimEdge Reload** to **On** or **Automatic** so that the paper edge is automatically cut before printing. (See "Menu Structure.") ➔P.51

The size of clear film cannot be detected

Cause	Corrective Action
The Platen is soiled with ink or other substances.	Open the Top Cover and clean the entire Platen. (See "Cleaning Inside the Top Cover.") ➔P.42

Roll Paper is Continuously Ejected

Cause	Corrective Action
Although sheets are selected as the paper source, a roll was advanced.	After roll ejection stops, follow these steps to reload the roll. 1. Push the Release Lever back. 2. Open the Roll Cover. 3. Using both hands, rotate the Roll Holder toward the back to rewind the roll. At this time, ensure that both ends of the roll are rewound evenly. 4. Pull the Release Lever forward. 5. Load the roll. At this time, be sure to press the **Load** button and select "**Load Roll Paper**". (See "Loading Rolls in the Printer.") ➔P.15

Printing does not start

The Data lamp on the Control Panel does not light up 94
The printer does not respond even if print jobs are sent 94
Ink Filling.. is displayed 94
The display screen indicates Agitating... 94

The Data lamp on the Control Panel does not light up

Cause	Corrective Action
The printer is not on.	Make sure the power cord is securely plugged in, all the way. Press the **Power** button to turn on the printer.
The target printer was not selected when printing.	• In Windows, select the printer by clicking **Select Printer** or **Printer** in the printing dialog box and try printing again. • In Mac OS, open the dialog box of the printer driver, select the printer from the list of **Printer**, and try printing again.
The print job is paused.	• In Windows, restart the print job as follows. 1. Select the printer icon in the **Printers and Faxes** (or **Printers**) window. 2. Clear **Pause Printing** in the **File** menu to restart the print job. • In Mac OS, restart the print job as follows. 1. Click **Print & Scan**. (This is identified as **Printers & Scanners** or **Print & Fax** in other versions of Mac OS.) 2. Select the printer, and then **Resume Printer** (or **Resume**) in the **Printers** menu to restart the print job.

The printer does not respond even if print jobs are sent

Cause	Corrective Action
In the Control Panel menu, **Pause Print** is **On**.	Set **Pause Print** to **Off**. (See "Pausing Printing.") ➔User's Guide
In the Control Panel menu, **Use USB** or **Use Ethernet** is set to **Off**.	Set **Use USB** or **Use Ethernet** to **On**. (See "Menu Settings.") ➔User's Guide

Ink Filling.. is displayed

Cause	Corrective Action
The printer was forced off during operation.	Wait until the system has been filled with ink.

The display screen indicates Agitating...

Cause	Corrective Action
Ink agitation is in progress.	Please wait until ink agitation is finished. The time for agitation varies depending on how long the printer has been off.

The printer stops during a print job

An error message is shown on the Display Screen 95
The printer ejects blank, unprinted paper 95

An error message is shown on the Display Screen

Cause	Corrective Action
The last portion of roll paper was used during a print job, and paper could not be advanced because the trailing edge is taped to the roll.	Remove the used roll and insert a new roll. (See "Removing the Roll from the Printer.") ➔P.18 (See "Removing the Roll Holder from Rolls.") ➔User's Guide (See "Loading and Printing on Rolls.") ➔User's Guide

The printer ejects blank, unprinted paper

Cause	Corrective Action
The leading edge of the roll paper was cut to straighten it.	The leading edge of rolls may be cut to straighten it if **Trim Edge First** is set to a value other than **Off** in the Control Panel menu. (See "Cutting the Leading Edge of Roll Paper Automatically.") ➔User's Guide
The Printhead nozzles are clogged.	Print a test pattern to check the nozzles and make sure the Printhead is in good condition for printing. (See "Checking for Nozzle Clogging.") ➔User's Guide
A print job was received from an incompatible printer driver.	Use the correct imagePROGRAF printer driver for the printer and try printing again.
The printer has received print data that includes HP RTL commands when **Auto Rotate** is **On** in the Control Panel menu.	In the Control Panel, set **Auto Rotate** to **Off** and print again. (See "Menu Settings.") ➔User's Guide
The printer is damaged.	Contact your Canon dealer for assistance.

Problems with the printing quality

Printing is faint 96
Paper rubs against the Printhead 96
The edges of the paper are dirty 97
The surface of the paper is dirty 98
The back side of the paper is dirty 98
Printed colors are inaccurate 98
Banding in different colors occurs 99
Colors in printed images are uneven 99
Image edges are blurred or white banding occurs 100
The contrast becomes uneven during printing 100
The length of printed images is inaccurate in the feeding direction 101
Images are printed crooked 101
Documents are printed in monochrome 101
Line thickness is not uniform 101
Lines are misaligned 102

Printing is faint

Cause	Corrective Action
You may be printing on the wrong side of the paper.	Print on the printing surface.
The Printhead nozzles are clogged.	Print a test pattern to check the nozzles and see if they are clogged. (See "Checking for Nozzle Clogging.") ➔User's Guide
Because the printer was left without ink tanks installed for some time, ink has become clogged in the ink supply system.	After the ink tanks have been installed for 24 hours, run **Head Cleaning B** from the Control Panel. (See "Cleaning the Printhead.") ➔P.44
Paper is jammed inside the Top Cover.	Follow the steps below to remove the jammed piece of paper inside the Top Cover. 1. Open the Top Cover and make sure the Carriage is not over the Platen. 2. Remove any scraps of paper inside the Top Cover. (See "Clearing Jammed Roll Paper.") ➔P.84 (See "Clearing a Jammed Sheet.") ➔P.87 3. Close the Top Cover.
The ink was not dry when paper was cut.	Specify a longer drying period in the Control Panel menu, in **Paper Details** > **Roll Drying-Time**. (See "Menu Settings.") ➔User's Guide
Printing may be faint if **Print Quality** in **Advanced Settings** in the printer driver is set to **Standard** or **Fast**.	In **Advanced Settings** of the printer driver, choose **Highest** or **High** in **Print Quality**. Printing in **Fast** or **Standard** mode is faster and consumes less ink than in **Highest** or **High** modes, but the printing quality is lower. (See "Giving Priority to Particular Graphic Elements and Colors for Printing.") ➔User's Guide
You are printing on paper that tends to generate dust when cut.	In the Control Panel menu, set **CutDustReduct.** in **Paper Details** to **On**. (See "Reducing Dust from Cutting Rolls.") ➔User's Guide

Paper rubs against the Printhead

Cause	Corrective Action
The type of paper specified in the printer driver does not match the type loaded in the printer.	Load paper of the same type as you have specified in the printer driver. (See "Loading Rolls in the Printer.") ➔P.15 (See "Loading Sheets in the Printer.") ➔P.21
	Make sure the same type of paper is specified in the printer driver as you have loaded in the printer. 1. Press the **Stop** button and stop printing.

Cause	Corrective Action
The type of paper specified in the printer driver does not match the type loaded in the printer.	2. Change the type of paper in the printer driver and try printing again.
Paper has been loaded incorrectly, causing it to wrinkle.	Reload the paper. (See "Loading Rolls in the Printer.") ➔P.15 (See "Loading Sheets in the Printer.") ➔P.21
The Printhead is set too low in the Control Panel menu.	In the Control Panel menu, set **Head Height** to **Automatic**. (See "Troubleshooting Paper Abrasion and Blurry Images.") ➔User's Guide
You are printing on heavyweight paper or paper that curls or wrinkles easily after absorbing ink.	For paper-based media such as Heavyweight Coated Paper, set the **VacuumStrngth** to **Strong** or **Strongest** in the Control Panel menu. If the paper still rubs against the printhead, set the **Head Height** in the Control Panel menu to a higher value than the current setting. (See "Adjusting the Vacuum Strength.") ➔User's Guide (See "Troubleshooting Paper Abrasion and Blurry Images.") ➔User's Guide
	For film-based media such as Tracing Paper, set the **VacuumStrngth** to **Standard**, **Strong** or **Strongest** in the Control Panel menu. If the paper still rubs against the printhead, set the **Head Height** in the Control Panel menu to a higher value than the current setting. (See "Adjusting the Vacuum Strength.") ➔User's Guide (See "Troubleshooting Paper Abrasion and Blurry Images.") ➔User's Guide
	When printing on paper 0.1 mm (0.004 in) thick or less, choose a **VacuumStrngth** setting of **Weakest** in the Control Panel menu. If rubbing still occurs, in the Control Panel menu, use a higher **Head Height** setting. (See "Adjusting the Vacuum Strength.") ➔User's Guide (See "Troubleshooting Paper Abrasion and Blurry Images.") ➔User's Guide
When you have loaded paper, the paper you have loaded does not match the type selected on the Control Panel.	Be sure to select the correct type of paper in the Control Panel menu when loading paper. (See "Loading Rolls in the Printer.") ➔P.15 (See "Loading Sheets in the Printer.") ➔P.21

The edges of the paper are dirty

Cause	Corrective Action
The Platen has become dirty after borderless printing or printing on small paper.	Open the Top Cover and clean the Platen. (See "Cleaning Inside the Top Cover.") ➔P.42
The type of paper as specified on the printer does not match the type specified in the printer driver.	Make sure the same type of paper is specified on the printer as in the printer driver. (See "Changing the Type of Paper.") ➔User's Guide
	Make sure the same paper type is specified in the printer driver as on the printer. 1. Press the **Stop** button and stop printing. 2. Change the type of paper in the printer driver and try printing again.
The paper is wrinkled or warped.	Straighten out the wrinkles or curls and reload the paper. Do not use paper that has been printed on previously. (See "Loading Rolls in the Printer.") ➔P.15 (See "Loading Sheets in the Printer.") ➔P.21
A cut line is printed because **CutDustReduct.** is **On** in the Control Panel menu to reduce cutting dust.	If this function is not needed, set **CutDustReduct.** to **Off** in the Control Panel menu. (See "Menu Settings.") ➔User's Guide
The Printhead is set too low in the Control Panel menu.	In the Control Panel menu, set **Head Height** to **Automatic**. (See "Troubleshooting Paper Abrasion and Blurry Images.") ➔User's Guide
You are printing on heavyweight paper or paper that curls or wrinkles easily after absorbing ink.	For paper-based media such as Heavyweight Coated Paper, set the **VacuumStrngth** to **Strong** or **Strongest** in the Control Panel menu. If the paper still rubs against the printhead, set the **Head Height** in the Control Panel menu to a higher value than the current setting. (See "Adjusting the Vacuum Strength.") ➔User's Guide (See "Troubleshooting Paper Abrasion and Blurry Images.") ➔User's Guide

Cause	Corrective Action
You are printing on heavyweight paper or paper that curls or wrinkles easily after absorbing ink.	For film-based media such as Tracing Paper, set the **VacuumStrngth** to **Standard**, **Strong** or **Strongest** in the Control Panel menu. If the paper still rubs against the printhead, set the **Head Height** in the Control Panel menu to a higher value than the current setting. (See "Adjusting the Vacuum Strength.") ➔User's Guide (See "Troubleshooting Paper Abrasion and Blurry Images.") ➔User's Guide
The Ejection Guide is soiled.	Clean the Ejection Guide. (See "Cleaning the Printer Exterior.") ➔User's Guide

The surface of the paper is dirty

Cause	Corrective Action
The Paper Retainer is soiled.	Clean the Paper Retainer. (See "Cleaning Inside the Top Cover.") ➔P.42
You are using a paper that does not dry easily.	In the Control Panel menu, set **Roll DryingTime** to at least **1 min.** (See "Menu Settings.") ➔User's Guide
	When paper that does not dry easily is used for printing, it may curl during printing and touch the Output Tray. In this case, in the Control Panel menu, complete the settings for **Dry time** and **Area** in **Scan Wait Time**. However, note that printing will now take longer. (See "Menu Settings.") ➔User's Guide

The back side of the paper is dirty

Cause	Corrective Action
The Platen has become dirty after borderless printing or printing on small paper.	Open the Top Cover and clean the Platen. (See "Cleaning Inside the Top Cover.") ➔P.42
The Platen has become soiled because you have set **Width Detection** to **Off** in the Control Panel menu.	Set **Width Detection** to **On** in the Control Panel menu, and then open the Top Cover and clean the Platen. (See "Cleaning Inside the Top Cover.") ➔P.42
	Open the Top Cover and clean the Platen. After this, manually advance the roll onto the Platen before printing. (See "Cleaning Inside the Top Cover.") ➔P.42 (See "Feeding Roll Paper Manually.") ➔User's Guide
The Paper Retainer is soiled.	Clean the Paper Retainer. (See "Cleaning Inside the Top Cover.") ➔P.42

Printed colors are inaccurate

Cause	Corrective Action
Color adjustment has not been activated in the **Advanced Settings** of the printer driver.	In the **Advanced Settings** of the printer driver, access **Color Settings** in **Color Mode** to adjust colors. (See "Main Sheet (Windows).") ➔User's Guide (See "Main Pane (Mac OS X).") ➔User's Guide
Colors have not been adjusted on the computer or monitor.	Refer to the computer and monitor documentation to adjust the colors.
	Adjust the settings of the color management software, referring to the software documentation as needed.
The Printhead nozzles are clogged.	Print a test pattern to check the nozzles and see if they are clogged. (See "Checking for Nozzle Clogging.") ➔User's Guide
Application Color Matching Priority is set to **Off** in the Windows printer driver.	Click **Special Settings** in the **Layout** sheet of the printer driver, and set **Application Color Matching Priority** to **On** in the dialog box that is displayed. (See "Layout Sheet (Windows).") ➔User's Guide

Cause	Corrective Action
Color may change slightly even on the same model of printer if you use a different version of the firmware or printer driver, or when you print under different settings or in a different printing environment.	Follow these steps to prepare the printing environment. 1. Use the same version of firmware or printer driver. 2. Specify the same value for all settings items.

Banding in different colors occurs

Cause	Corrective Action
The paper feed amount is out of adjustment.	Adjust the feed amount. (See "Adjusting the Feed Amount.") ➔User's Guide
Printing does not proceed smoothly because print jobs are interrupted during transmission.	Exit other applications and cancel other print jobs.
In the Control Panel menu, **Adj. Priority** is set to **Print Length**.	Setting **Adj. Priority** to **Print Quality** in the Control Panel menu and adjusting the feed amount may improve results. (See "Adjusting the Feed Amount.") ➔User's Guide
The Printhead is out of alignment.	Adjust the Printhead alignment. (See "Automatic Adjustment to Straighten Lines and Colors.") ➔P.79
The Printhead nozzles are clogged.	Print a test pattern to check the nozzles and see if they are clogged. (See "Checking for Nozzle Clogging.") ➔User's Guide
Streaks may occur if you set the **Print Quality** too low.	Choose a higher level of **Print Quality** in the **Advanced Settings** of the printer driver and try printing again. Printing in **Fast** or **Standard** mode is faster and consumes less ink than in **Highest** or **High** modes, but the printing quality is lower. (See "Giving Priority to Particular Graphic Elements and Colors for Printing.") ➔User's Guide
The type of paper specified in the printer driver does not match the type loaded in the printer.	Load paper of the same type as you have specified in the printer driver. (See "Loading Rolls in the Printer.") ➔P.15 (See "Loading Sheets in the Printer.") ➔P.21
	Make sure the same type of paper is specified in the printer driver as you have loaded in the printer. 1. Press the **Stop** button and stop printing. 2. Change the type of paper in the printer driver and try printing again.

Colors in printed images are uneven

Cause	Corrective Action
Line Drawing/Text is selected when printing images in many solid colors.	In **Print Priority** in the **Advanced Settings** of the printer driver, choose **Image**.
You are printing on paper that curls easily.	Printed colors may appear uneven on the leading edge of paper that is susceptible to curling. Select a stronger level in **VacuumStrngth** in the Control Panel menu to increase suction against the paper, or specify a leading margin of 20 mm (0.79 in) or more. (See "Adjusting the Vacuum Strength.") ➔User's Guide
Printed colors may be uneven if you set the **Print Quality** too low.	Choose a higher level of **Print Quality** in the **Advanced Settings** of the printer driver. Printing in **Fast** or **Standard** mode is faster and consumes less ink than in **Highest** or **High** modes, but the printing quality is lower. (See "Giving Priority to Particular Graphic Elements and Colors for Printing.") ➔User's Guide
Color may be uneven between dark and light image areas.	Select **Unidirectional Printing** in the **Advanced Settings** of the printer driver.

Cause	Corrective Action
When borderless printing is used, the edge of the paper is cut during printing. Thus, ink density may be slightly uneven at the leading edges.	Specify **No** in **Auto Cut** in the printer driver before printing. In this case, the paper can be printed without borders on the left and right sides only. Cut the printed document ejected from the printer, and then use scissors or a cutting tool to cut away the edges on the top and bottom.
	Choose a higher level of **Print Quality** in the **Advanced Settings** of the printer driver. (See "Giving Priority to Particular Graphic Elements and Colors for Printing.") ➔User's Guide
The Printhead is out of alignment.	Adjust the Printhead alignment. (See "Automatic Adjustment to Straighten Lines and Colors.") ➔P.79
Allowing printed documents to dry on top of each other may cause uneven colors.	To avoid uneven colors, we recommend drying each sheet separately.
Density may be uneven if you use Glossy Paper or Coated Paper.	In **Advanced Settings** of the printer driver, choose **Highest** or **High** in **Print Quality**.
The type of paper specified in the printer driver does not match the type loaded in the printer.	Load paper of the same type as you have specified in the printer driver. (See "Loading Rolls in the Printer.") ➔P.15 (See "Loading Sheets in the Printer.") ➔P.21
	Make sure the same type of paper is specified in the printer driver as you have loaded in the printer. 1. Press the **Stop** button and stop printing. 2. Change the type of paper in the printer driver and try printing again.
Scan Wait Time > **Area** in the Control Panel menu is set to **Leading edge**.	When **Scan Wait Time** > **Area** is set to **Leading edge**, colors may be uneven 110–140 mm from the leading edge. (The position varies depending on the **Print Quality** setting.) In this case, select **Scan Wait Time** > **Area** > **Entire area**. However, note that printing will now take longer. (See "Menu Settings.") ➔User's Guide

Image edges are blurred or white banding occurs

Cause	Corrective Action
The Platen suction is too strong.	In the Control Panel menu, reduce the level of **VacuumStrngth**. (See "Adjusting the Vacuum Strength.") ➔User's Guide
Incorrect Printhead alignment value.	In the Control Panel menu, set **Head Height** to a lower height. (See "Troubleshooting Paper Abrasion and Blurry Images.") ➔User's Guide
The type of paper specified in the printer driver does not match the type loaded in the printer.	Load paper of the same type as you have specified in the printer driver. (See "Loading Rolls in the Printer.") ➔P.15 (See "Loading Sheets in the Printer.") ➔P.21
	Make sure the same type of paper is specified in the printer driver as you have loaded in the printer. 1. Press the **Stop** button and stop printing. 2. Change the type of paper in the printer driver and try printing again.

The contrast becomes uneven during printing

Cause	Corrective Action
The paper feed amount is out of adjustment.	Adjust the feed amount. (See "Adjusting the Feed Amount.") ➔User's Guide
The type of paper specified in the printer driver does not match the type loaded in the printer.	Load paper of the same type as you have specified in the printer driver. (See "Loading Rolls in the Printer.") ➔P.15 (See "Loading Sheets in the Printer.") ➔P.21
	Make sure the same type of paper is specified in the printer driver as you have loaded in the printer. 1. Press the **Stop** button and stop printing.

Cause	Corrective Action
The type of paper specified in the printer driver does not match the type loaded in the printer.	2. Change the type of paper in the printer driver and try printing again.

The length of printed images is inaccurate in the feeding direction

Cause	Corrective Action
In the Control Panel menu, **Adj. Priority** is set to **Print Quality**.	Set **Adj. Priority** to **Print Length** in the Control Panel menu, and then execute **Adjust Length**. (See "Adjusting the Feed Amount.") ➔User's Guide
The type of paper specified in the printer driver does not match the type loaded in the printer.	Load paper of the same type as you have specified in the printer driver. (See "Loading Rolls in the Printer.") ➔P.15 (See "Loading Sheets in the Printer.") ➔P.21
	Make sure the same type of paper is specified in the printer driver as you have loaded in the printer. 1. Press the **Stop** button and stop printing. 2. Change the type of paper in the printer driver and try printing again.

Images are printed crooked

Cause	Corrective Action
In the Control Panel menu, **Skew Check Lv.** is set to **Loose** or **Off**.	In the Control Panel menu, set **Skew Check Lv.** to **Standard**.
In the Control Panel menu, **Width Detection** is set to **Off**.	Set **Width Detection** to **On** in the Control Panel menu.

Documents are printed in monochrome

Cause	Corrective Action
In the **Advanced Settings** of the printer driver, **Monochrome**, **Monochrome (BK ink)**, or **Monochrome Bitmap** is specified in **Color Mode**.	In the **Advanced Settings** of the printer driver, specify **Color** in **Color Mode** and try printing again.
The Printhead nozzles are clogged.	Print a test pattern to check the color ink nozzles and see if they are clogged. (See "Checking for Nozzle Clogging.") ➔User's Guide

Line thickness is not uniform

Cause	Corrective Action
In the **Special Settings** dialog box of the Windows printer driver, **Fast Graphic Process** is set to **On**.	Access the printer driver **Properties** dialog box from **Print** in the **File** menu of the source application, and follow these steps to print. 1. Clear the option **Open Preview When Print Job Starts** on the **Main** sheet. 2. Clear the option **Page Layout** on the **Layout** sheet. 3. Click the **Special Settings** button in the **Layout** sheet, open the **Special Settings** dialog box, and set **Fast Graphic Process** to **Off**.
The type of paper specified in the printer driver does not match the type loaded in the printer.	Load paper of the same type as you have specified in the printer driver. (See "Loading Rolls in the Printer.") ➔P.15 (See "Loading Sheets in the Printer.") ➔P.21
	Make sure the same type of paper is specified in the printer driver as you have loaded in the printer. 1. Press the **Stop** button and stop printing. 2. Change the type of paper in the printer driver and try printing again.

Lines are misaligned

Cause	Corrective Action
The Printhead alignment is not adjusted.	Adjust the Printhead alignment. (See "Automatic Adjustment to Straighten Lines and Colors.") ➔P.79 (See "Manual Adjustment to Straighten Lines and Colors.") ➔User's Guide (See "Adjusting Line Misalignment.") ➔User's Guide
The type of paper specified in the printer driver does not match the type loaded in the printer.	Load paper of the same type as you have specified in the printer driver. (See "Loading Rolls in the Printer.") ➔P.15 (See "Loading Sheets in the Printer.") ➔P.21
	Make sure the same type of paper is specified in the printer driver as you have loaded in the printer. 1. Press the **Stop** button and stop printing. 2. Change the type of paper in the printer driver and try printing again.

Cannot print over a network

Cannot connect the printer to the network 103
Cannot print over a TCP/IP network 103
Cannot print over a Bonjour network 103

Cannot connect the printer to the network

Cause	Corrective Action
The Ethernet cable is not connected correctly to the printer's Ethernet port.	**1.** Make sure the printer is connected to the network with the correct Ethernet cable, and then turn the printer on. For instructions on connecting the cable, refer to the Setup Guide. **2.** Make sure the Link indicator is lit. The bottom indicator is green if the printer is connected via 1000Base-T, while the top indicator is orange if connected via 100Base-TX and the top indicator is green if connected via 10Base-T. If the Link indicator is not lit, check the following points. • Make sure the hub is on. • Make sure the end of the Ethernet cable is connected correctly. Insert the Ethernet cable until it clicks and locks in place. • Make sure there is no problem with the Ethernet cable. If there is any problem, replace the Ethernet cable. • Check the communication mode with the hub. Although the printer normally detects the hub communication mode and transmission rate automatically (in auto negotiation mode), sometimes the hub settings cannot be detected. In this case, configure the connection method manually, specifying the communication mode in use. (See "Configuring the Communication Mode Manually.") ➔User's Guide

Cannot print over a TCP/IP network

Cause	Corrective Action
The printer's IP address is not configured correctly.	Make sure the printer's IP address is configured correctly. (See "Configuring the IP Address Using imagePROGRAF Device Setup Utility.") ➔User's Guide (See "Configuring the IP Address Using the Printer Control Panel.") ➔User's Guide
The printer's TCP/IP network settings are not configured correctly.	Make sure the printer's TCP/IP network settings are configured correctly. (See "Configuring the Printer's TCP/IP Network Settings With RemoteUI.") ➔User's Guide
The computer you are trying to print from is not configured correctly.	Make sure the computer's TCP/IP network settings are configured correctly. (See "Configuring the Printer Driver Destination (Windows).") ➔User's Guide (See "Configuring the Destination in TCP/IP Networks (Macintosh).") ➔User's Guide

Cannot print over a Bonjour network

Cause	Corrective Action
The computer you are trying to print from is not configured correctly.	Make sure the computer is configured correctly. (See "Configuring the Destination for Bonjour Network (Macintosh).") ➔User's Guide
The computer and printer are not on the same network.	Due to the nature of Bonjour, you cannot print if the printer is on another network behind a router. Make sure the computer and printer are on the same network. For information about network settings, ask your network administrator.

Installation problems

The computer does not recognize the printer 104
Removing Installed Printer Drivers 104

The computer does not recognize the printer

Cause	Corrective Action
In the Control Panel menu, **Use USB** or **Use Ethernet** is set to **Off**.	Set **Use USB** or **Use Ethernet** to **On**. (See "Menu Settings.") ➔User's Guide

Removing Installed Printer Drivers

Follow these steps to remove installed printer drivers and utilities.

Removing printer drivers (Windows)

Remove the printer driver as follows.

Note
- The following procedure is for Windows 7. The method of removing printer drivers varies depending on the version of Windows.

1. From the Windows **start** menu, select **All Programs** > **Canon Printer Uninstaller** > **imagePROGRAF Printer Driver Uninstaller** to display the **Delete Printer** window.
2. Select the printer in the list and click **Delete**.
3. Click **Yes** after the **Warning** message is displayed.
4. Make sure that the printer has been removed from the list, and then click **Exit**.

Removing imagePROGRAF Status Monitor (Windows)

Remove imagePROGRAF Status Monitor as follows.

Note
- The following procedure is for Windows 7. The method of removing printer drivers varies depending on the version of Windows.

1. Select **Control Panel** from the **start** menu.
2. Select **Uninstall a program**.

   Note
   - If the **User Account Control** dialog box is displayed, click **Yes**.

3. Select **imagePROGRAF Status Monitor**, and then click the **Uninstall** button.

Removing imagePROGRAF Device Setup Utility (Windows)

Remove imagePROGRAF Device Setup Utility as follows.

Note
- The following procedure is for Windows 7. The method of removing printer drivers varies depending on the version of Windows.

1 From the Windows **start** menu, select **All Programs** > **imagePROGRAF Device Setup Utility** > **Uninstaller (imagePROGRAF Device Setup Utility)** to start the wizard.

2 In the wizard window, click **Delete**, and then click **Next**.

3 Follow the instructions on the screen to remove **imagePROGRAF Device Setup Utility**.

HP-GL/2 problems

With HP-GL/2, printing is misaligned 106
Lines or images are missing in printed HP-GL/2 jobs. 106
Lines are printed too thick or thin in HP-GL/2 print jobs 106
HP-GL/2 jobs are printed in monochrome (or color) 106
Printed colors of lines are inaccurate during HP-GL/2 printing 106
HP-GL/2 jobs are printed 6 mm larger than specified 107
HP-GL/2 jobs are printed at maximum size, even if a standard size is specified 107

HP-GL/2 printing takes a long time 107
Replotting with HP-GL/2 jobs is not possible. 107
The printer stops when printing a HP-GL/2 job (the carriage stops moving) 107

With HP-GL/2, printing is misaligned

Cause	Corrective Action
The plotter origin is incorrect.	Check the printing commands.
The **Margin** setting in the Control Panel menu is incorrect.	Adjust the **Margin** setting values in the Control Panel menu.

Lines or images are missing in printed HP-GL/2 jobs.

Cause	Corrective Action
The memory is full.	Check the size of the data in the print job.
An HP-GL/2 command not supported by this printer was received.	Check the print job and settings.
The printer has received print data that includes HP RTL commands when **Auto Rotate** is **On** in the Control Panel menu.	In the Control Panel, set **Auto Rotate** to **Off** and print again. (See "Menu Settings.") ➔User's Guide

Lines are printed too thick or thin in HP-GL/2 print jobs

Cause	Corrective Action
The **Width** setting in the Control Panel menu is incorrect.	Change the **Width** setting configured in **Pen no.** of the **Palette A** or **Palette B** selected in the Control Panel menu. (See "Menu Settings.") ➔User's Guide
ThickenFineLines in the Control Panel menu is set to **Off**.	If fine lines are printed faintly, setting **ThickenFineLines** to **On** will print the lines more distinctly. (See "Menu Settings.") ➔User's Guide

HP-GL/2 jobs are printed in monochrome (or color)

Cause	Corrective Action
The **Color Mode** setting in the Control Panel menu is incorrect.	Check the **Color Mode** setting in the Control Panel menu. (See "Menu Settings.") ➔User's Guide However, for optimal Printhead performance, the printer consumes trace amounts of color ink even when **Monochrome** is selected as **Color Mode**.

Printed colors of lines are inaccurate during HP-GL/2 printing

Cause	Corrective Action
AdjustFaintLines is **On** in the Control Panel menu.	Setting **AdjustFaintLines** to **Off** in the Control Panel menu may help produce the expected results. However, lines in some colors may appear broken.

HP-GL/2 jobs are printed 6 mm larger than specified

Cause	Corrective Action
The page size of the HP-GL/2 print job, as created in the source application, is incorrect.	In the Control Panel menu, set **PageSizeProcess1** to **On**. (See "Menu Settings.") ➔User's Guide

HP-GL/2 jobs are printed at maximum size, even if a standard size is specified

Cause	Corrective Action
The page size of the HP-GL/2 print job, as created in the source application, is incorrect.	In the Control Panel menu, set **PageSizeProcess2** or **Conserve Paper** to **On**. The layout will be changed to the optimal layout. (See "Menu Settings.") ➔User's Guide

HP-GL/2 printing takes a long time

Cause	Corrective Action
Large print jobs with a lot of data take longer to print.	Please wait a while until printing is finished.
A job was printed when **Input Resolution** in the Control Panel menu was set to **600dpi**.	In the Control Panel menu, set **Input Resolution** to **300dpi** and print again. (See "Menu Settings.") ➔User's Guide

Replotting with HP-GL/2 jobs is not possible.

Cause	Corrective Action
The data was lost because of replotting.	Data for replotting is lost after the following operations. In this case, send the print job again. • The memory buffer was cleared from the Control Panel. • The printer was turned off. • The printer has received a new HP-GL/2 print job. • Printing has been canceled

The printer stops when printing a HP-GL/2 job (the carriage stops moving)

Cause	Corrective Action
The printer is analyzing the print job.	Please wait a while until printing is finished.
A job was printed when **Input Resolution** in the Control Panel menu was set to **600dpi**.	In the Control Panel menu, set **Input Resolution** to **300dpi** and print again. (See "Menu Settings.") ➔User's Guide

Other problems

The printer does not go on 108
If the Printer Makes a Strange Sound 108
Messages advising to check the maintenance cartridge are not cleared 108
The printer consumes a lot of ink 108
Ink Level Detection 109

The printer does not go on

Cause	Corrective Action
The printer is unplugged.	Plug the power cord into the outlet, and then turn on the printer.
The specified voltage is not supplied.	Check the voltage of the outlet and breaker. (See "Specifications.") ➔User's Guide

If the Printer Makes a Strange Sound

Cause	Corrective Action
The printer makes a sound during operation.	The following sounds do not indicate a problem with the printer. • There is a sound of suction from the Platen To prevent paper from rising, paper is held against the Platen by suction from Vacuum holes under it. • There is a sound when a different size of paper is used and when the Carriage goes from side to side When paper of a different size is used, a valve is automatically activated to switch the area for paper suction, which may make a sound. This mechanism prevents suction from Vacuum holes where there is no paper. In addition, ink is ejected in sync with the movement of the Carriage back and forth to ensure optimal ink flow. At this time, the valve automatically switches the area for paper suction, which may make a sound. • Roll paper makes a fluttering sound during printing There may be a fluttering sound when large paper is advanced. • If you suddenly hear the tone for cleaning operations At regular intervals, for printer maintenance, cleaning operations will begin automatically, even if the printer is in Sleep mode. • If you suddenly hear the tone for ink agitation At regular intervals, to ensure optimal printing quality, the ink is agitated automatically, even if the printer is in Sleep mode. The ink is also agitated automatically under the following conditions. Note that other operations are not possible while "**Agitating...**" is displayed on the control panel. • After the printer is turned on In other cases, contact your Canon dealer.

Messages advising to check the maintenance cartridge are not cleared

Cause	Corrective Action
The printer has not detected the new Maintenance Cartridge that was used to replace the old one.	Remove the new Maintenance Cartridge you have just installed and insert it again firmly. (See "Replacing the Maintenance Cartridge.") ➔P.37

The printer consumes a lot of ink

Cause	Corrective Action
Many full-page color images are printed.	In print jobs such as photos, images are filled with color. This consumes a lot of ink. This does not indicate a problem with the printer.

Cause	Corrective Action
Head Cleaning B in the Control Panel menu is executed frequently.	**Head Cleaning B** in the Control Panel menu consumes a lot of ink. This does not indicate a problem with the printer. Unless the printer has been moved or stored for a long period or you are troubleshooting Printhead problems, we recommend not performing **Head Cleaning B**, to the extent possible.
You have just finished initial installation, when more ink is consumed to fill the system.	After initial installation or at the first-time use after transfer, ink flows into the system between the Ink Tank and Printhead. Although the amount of remaining ink may drop as a result, it does not indicate a problem.
The Printhead nozzles are clogged.	Check for nozzle clogging. (See "Checking for Nozzle Clogging.") ➔User's Guide

Ink Level Detection

Ink level detection will be deactivated if you load ink tanks once emptied.

Ink level detection

Ink tanks specified for this printer feature an ink level detection function to prevent the ink from running out during printing, which prevents printer damage. (See "Ink Tanks.") ➔User's Guide
This function will not work correctly if you use refill ink tanks. As a result, printing stops. Thus, before using refill ink tanks, you must cancel the ink level detection.
Printing with the ink level detection canceled may lead to printer damage and printing problems. Canon Inc. is not liable for any damage that may occur as a result of refilling ink.

Important

- After ink level detection has been released, this function cannot be reactivated for currently loaded Ink Tank. To use ink level detection again, replace the Ink Tank with new ones specified for use with the printer.
- Repeatedly removing and inserting an Ink Tank may damage the connection between the Ink Tank and the printer, which may cause ink leakage from the Ink Tank and damage the printer.

Releasing ink level detection

1 On the Display Screen, a message indicates that the ink level cannot be detected. After checking the message, press the ▶ button.

Remaining level
of the ink cannot
be correctly
detected.
Check ink tank.
▶

2 Press ▲ or ▼ to select **Information**, and then press the **OK** button.

◀ Please Check

Check
Information

3 A confirmation message is shown on the Display Screen about releasing ink level detection. After checking the message, press the ▶ button.

Tank once emptied
is used. Printing
stopped due to ink
level unknown.
▶

4 After checking the message, press the ▶ button.

To continue, you must release ink level detection.

5 Press ▲ or ▼ to select **Yes**, and then press the **OK** button.

◀ Release?

No
Yes

6 Check the message and press the ▶ button.

Release ink level detection after confirming that ink is in ink tank.

7 Check the message and press the ▶ button.

Canon is not liable for damages due to ink tank filling.

8 Press ▲ or ▼ to select **Yes**, and then press the **OK** button.

◀ Agree?

No
Yes

9 A confirmation message about updating ink information is shown on the Display Screen. After checking the message, press the ▶ button.

Release ink level detection. Perform after use of ink tank was registered?

10 Press ▲ or ▼ to select **Yes**, and then press the **OK** button.

Ink level detection is now released.

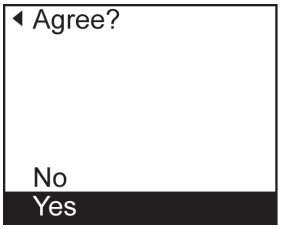

Error Message

Messages regarding paper

Paper mismatch 112
MediaType Mismatch 112
The paper is too small. 113
The paper is too small. 113
PaprWidth Mismatch 114
Paper size not detected. 114
Insufficient paper for job 115
This paper cannot be used. 115

Roll printing is selected. 115
Roll printing is selected, but sheets are loaded. 116
The roll is empty. 116

Sheet printing is selected. 116
Regular printing is selected, but a roll is loaded. 116

Paper jam 117
Paper is crooked. 117
Paper not aligned with right guide. 118
Cannot detect papr 118
Leading edge detection error. 118
Paper cutting failed. 118
End of paper feed. 119
Rel lever is in wrong position. 119

Borderless printng not possible. 119
Paper position not suitable for borderless printing. 120

Roll paper is not securely in contact with roll holder. 120

Paper mismatch

Cause	Corrective Action
You tried to print a test pattern for printer adjustment on several sheets, but sheets of different types or sizes of paper were used.	When printing a test pattern for adjustment, use sheets of the same size and type of paper, in the required quantity. Press ▲ or ▼ to select **Change Paper**, press the **OK** button, and replace the paper. (See "Loading and Printing on Sheets.") ➔User's Guide The printer now starts printing the test pattern.
	Press ▲ or ▼ to select **Stop Printing**, and then press the **OK** button.

MediaType Mismatch

Cause	Corrective Action
When **Detect Mismatch** in the Control Panel menu is set to **Pause**, the type of paper loaded does not match the type specified in the printer driver.	Follow these steps to ensure the paper type matches on the printer and in the printer driver. 1. Press ▲ or ▼ to select **Stop Printing**, and then press the **OK** button. 2. Change the paper type setting in the printer driver to the type loaded in the printer and try printing again.
	Follow these steps to ensure the paper type matches on the printer and in the printer driver. 1. Press ▲ or ▼ to select **Change Paper**, and then press the **OK** button.

Cause	Corrective Action
When **Detect Mismatch** in the Control Panel menu is set to **Pause**, the type of paper loaded does not match the type specified in the printer driver.	2. Replace the loaded paper with paper of the type and size you have specified in the printer driver. (See "Loading and Printing on Rolls.") ➔User's Guide (See "Loading and Printing on Sheets.") ➔User's Guide
	Press ▲ or ▼ to select **Print**, and then press the **OK** button to resume printing. However, note that this error may cause paper jams and affect the printing quality.
When **Detect Mismatch** in the Control Panel menu is set to **Warning**, the type of paper loaded does not match the type specified in the printer driver.	You can continue to print, but note that this error may cause paper jams or problems in the printing results.

The paper is too small.

Cause	Corrective Action
When **Detect Mismatch** in the Control Panel menu is set to **Pause**, paper smaller than the size specified in the printer driver is loaded.	Press ▲ or ▼ to select **Print**, and then press the **OK** button to resume printing. However, note that this error may cause paper jams and affect the printing quality.
	Adjust the paper size setting in the printer driver to match the size loaded in the printer as follows. 1. Press ▲ or ▼ to select **Stop Printing**, and then press the **OK** button. 2. Change the paper size setting in the printer driver to the size loaded in the printer and try printing again.
	Replace the loaded paper with paper of a size that matches the size setting in the printer driver as follows. 1. Press ▲ or ▼ to select **Change Paper**, and then press the **OK** button to stop printing. 2. Replace the loaded paper to match the settings in the printer driver and try printing again. (See "Loading and Printing on Rolls.") ➔User's Guide (See "Loading and Printing on Sheets.") ➔User's Guide
When **Detect Mismatch** in the Control Panel menu is set to **Warning**, paper smaller than the size specified in the printer driver is loaded.	You can continue to print, but note that this error may cause problems in the printing results.

The paper is too small.

"Replace paper with A4/LTR (vertical) or larger"

Cause	Corrective Action
The loaded paper is too small.	Replace the paper with paper of A4/Letter (vertical) size or larger as follows. 1. Press ▲ or ▼ to select **Change Paper**, press the **OK** button, and remove the paper. (See "Removing Sheets.") ➔P.23 2. Switch to paper A4/Letter (vertical) or larger. (See "Loading and Printing on Sheets.") ➔User's Guide The printer will resume printing.
	Press ▲ or ▼ to select **Stop Printing**, and then press the **OK** button.

"Replace roll with 10 in. wide or larger roll."

Cause	Corrective Action
The loaded paper is too small.	Replace the roll with a roll 10 inches in width or larger as follows.

Cause	Corrective Action
The loaded paper is too small.	**1.** Press ▲ or ▼ to select **Change Paper**, and then press the **OK** button. (See "Removing the Roll from the Printer.") ➔P.18 (See "Removing the Roll Holder from Rolls.") ➔User's Guide **2.** Replace the roll with a roll 10 inches wide or larger. (See "Attaching the Roll Holder to Rolls.") ➔P.12 (See "Loading Rolls in the Printer.") ➔P.15 The printer will resume printing.
	Press ▲ or ▼ to select **Stop Printing**, and then press the **OK** button.

"Remove paper and check pap. size"

Cause	Corrective Action
A sheet has come out of the printer during printing. 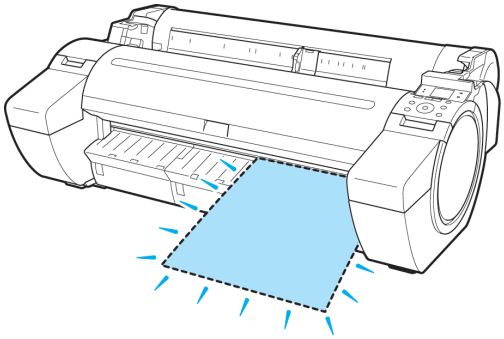	**1.** Press the Release Lever back and remove the paper. **2.** Reload the sheet, aligning it with the guide on the right. **3.** Pull the Release Lever forward. **4.** If "**Not finished printing. Finish printing remaining jobs?**" is shown on the Display Screen, press the **OK** button. Printing will resume, starting from the page on which the error occurred. (See "Loading Sheets in the Printer.") ➔P.21

PaprWidth Mismatch

Cause	Corrective Action
When **Detect Mismatch** in the Control Panel menu is set to **Pause**, the width of the loaded roll does not match the width specified in **Fit Roll Paper Width** in the printer driver.	Press ▲ or ▼ to select **Print**, and then press the **OK** button to resume printing. However, note that this error may cause paper jams and affect the printing quality.
	Press ▲ or ▼ to select **Stop Printing**, and then press the **OK** button.
	Follow these steps to replace the roll to match the width specified in the printer driver. **1.** Press ▲ or ▼ to select **Change Paper**, and then press the **OK** button. (See "Removing the Roll from the Printer.") ➔P.18 (See "Removing the Roll Holder from Rolls.") ➔User's Guide **2.** Replace with paper of the width configured in the printer driver. (See "Attaching the Roll Holder to Rolls.") ➔P.12 (See "Loading Rolls in the Printer.") ➔P.15 The printer now starts printing the print job.
	Make sure the roll width selected in the dialog box displayed when you select **Fit Roll Paper Width** in the printer driver matches the width of the roll loaded in the printer, and then try printing again.

Paper size not detected.

Cause	Corrective Action
Paper has been loaded askew, or warped paper has been loaded.	Follow these steps to reload the roll. **1.** Press the **OK** button and reload the paper. (See "Loading Rolls in the Printer.") ➔P.15 **2.** Pull the Release Lever forward.

Cause	Corrective Action
Paper has been loaded askew, or warped paper has been loaded.	**3.** If "**Not finished printing. Finish printing remaining jobs?**" is shown on the Display Screen, press the **OK** button. Printing will resume, starting from the page on which the error occurred.
	If this error recurs after you reload the roll, remove the Roll Holder from the printer, push the roll firmly in until it touches the Roll Holder flange, and reload the Roll Holder in the printer. (See "Attaching the Roll Holder to Rolls.") ➔P.12
	Follow these step to reload a sheet. **1.** Push the Release Lever back. **2.** Load the sheet, aligning it with the guide on the right. (See "Loading Sheets in the Printer.") ➔P.21 **3.** Pull the Release Lever forward. **4.** If "**Not finished printing. Finish printing remaining jobs?**" is shown on the Display Screen, press the **OK** button. Printing will resume, starting from the page on which the error occurred.

Insufficient paper for job

Cause	Corrective Action
The printer has received a print job longer than the amount of roll paper left when **ManageRemainRoll** in the Control Panel menu is **On**. 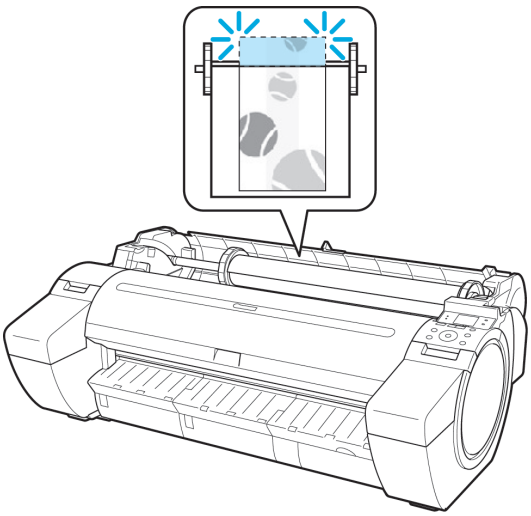	Press ▲ or ▼ to select **Print**, and then press the **OK** button to resume printing. However, the roll paper may run out during the print job and you may not be able to print all of the document.
	Press ▲ or ▼ to select **Change Paper**, and then press the **OK** button to stop printing. Either change the printer driver **Paper Source** setting or the **GL2 Settings** > **Paper Source** setting in the printer menu or replace the roll with a roll that has enough paper for the print job, and then try printing again. (See "Removing the Roll from the Printer.") ➔P.18 (See "Loading Rolls in the Printer.") ➔P.15
	Press ▲ or ▼ and select **Stop Printing** or press the **Stop** button to stop printing.

This paper cannot be used.

Cause	Corrective Action
Paper smaller than the printer's minimum supported size has been loaded.	Push the Release Lever back and load paper of the correct size. (See "Paper Sizes.") ➔User's Guide
Paper has been loaded that is too small to print the test pattern for printhead adjustment or nozzle checking.	Push the Release Lever back and load unused paper of A4 size or larger. More than one sheet may be required depending on the adjustment.

Roll printing is selected.

Cause	Corrective Action
You have attempted to print on a roll, but no roll is loaded.	Press ▲ or ▼ to select "**Load Roll Paper**", and then press the **OK** button. Load the roll, and then print. (See "Attaching the Roll Holder to Rolls.") ➔P.12 (See "Loading Rolls in the Printer.") ➔P.15

Cause	Corrective Action
You have attempted to print on a roll, but no roll is loaded.	Press ▲ or ▼ and select **Stop Printing** or press the **Stop** button to stop printing.

Roll printing is selected, but sheets are loaded.

Cause	Corrective Action
A print job for rolls was received when a sheet is loaded.	Follow these steps to load and print on a roll. 1. Press ▲ or ▼ to select **Eject Cut Sheet**, press the **OK** button, and remove the sheet. (See "Removing Sheets.") ➔P.23 2. Load a new roll. (See "Loading Rolls in the Printer.") ➔P.15 The printer now starts printing the print job.
	Press ▲ or ▼ to select **Stop Printing**, and then press the **OK** button.

The roll is empty.

Cause	Corrective Action
The roll is empty.	Follow these steps to replace the used roll with a new roll of the same type and size. 1. Press the Release Lever back and remove the roll. (See "Removing the Roll from the Printer.") ➔P.18 (See "Removing the Roll Holder from Rolls.") ➔User's Guide 2. Load the new roll. (See "Attaching the Roll Holder to Rolls.") ➔P.12 (See "Loading Rolls in the Printer.") ➔P.15 3. If no barcode was printed on the roll, specify the type of paper. (See "Changing the Type of Paper.") ➔User's Guide 4. When you have selected **ManageRemainRoll** > **On** in the control panel menu and a barcode is not printed on the roll, also specify the paper length. (See "Specifying the Paper Length.") ➔User's Guide 5. If "**Not finished printing. Finish printing remaining jobs?**" is shown on the Display Screen, press the **OK** button. Printing will resume, starting from the page on which the error occurred. If no message appears, printing will continue from the next page.
There is remaining roll paper, but because it could not be advanced, it could not be detected.	The unused portion of the roll is heavy, and this is placing a burden on the printer. It may be helpful to change the printing mode, which will change the paper feed timing. Choose a higher level of **Print Quality** in the **Advanced Settings** of the printer driver. (See "Giving Priority to Particular Graphic Elements and Colors for Printing.") ➔User's Guide

Sheet printing is selected.

Cause	Corrective Action
You have attempted to print on a sheet, but no sheet is loaded.	Press ▲ or ▼ to select **Load Paper**, and then press the **OK** button. Load a sheet, and then print. (See "Loading and Printing on Sheets.") ➔User's Guide
	Press ▲ or ▼ and select **Stop Printing** or press the **Stop** button to stop printing.

Regular printing is selected, but a roll is loaded.

Cause	Corrective Action
A print job for printing on sheets was sent when a roll is loaded.	1. Press ▲ or ▼ to select **Remove Roll Paper**, and then press the **OK** button to stop printing.

Cause	Corrective Action
A print job for printing on sheets was sent when a roll is loaded.	**2.** After removing the roll, load and print on a sheet of the type and size of paper you have specified in the printer driver. (See "Removing the Roll from the Printer.") ➔P.18 (See "Loading and Printing on Sheets.") ➔User's Guide
	Press ▲ or ▼ to select **Stop Printing**, and then press the **OK** button to stop printing.

Paper jam

Cause	Corrective Action
A paper jam occurred in the printer during printing.	For roll paper, cut the paper on the upper side of the {Paper Feed Slot. **1.** Push the Release Lever back and remove the jammed paper. (See "Clearing Jammed Roll Paper.") ➔P.84 (See "Clearing a Jammed Sheet.") ➔P.87 **2.** Load the paper. (See "Loading Rolls in the Printer.") ➔P.15 (See "Loading Sheets in the Printer.") ➔P.21 **3.** Pull the Release Lever forward. **4.** If "**Not finished printing. Finish printing remaining jobs?**" is shown on the Display Screen, press the **OK** button. Printing will resume, starting from the page on which the error occurred.

Paper is crooked.

Cause	Corrective Action
Paper loaded crooked was detected when the paper was advanced.	Follow these steps to reload the roll. **1.** Push the Release Lever back. **2.** Adjust the right edge of the roll to make it parallel to the orange Paper Alignment Line. **3.** Pull the Release Lever forward. (See "Loading Rolls in the Printer.") ➔P.15
	If this error recurs after you reload the roll, remove the Roll Holder from the printer, push the roll firmly in until it touches the Roll Holder flange, and reload the Roll Holder in the printer. (See "Attaching the Roll Holder to Rolls.") ➔P.12
	Follow these step to reload a sheet. **1.** Push the Release Lever back. **2.** Pull out the sheet. **3.** Pull the Release Lever forward. **4.** Reload the sheet, aligning it with the guide on the right. (See "Loading Sheets in the Printer.") ➔P.21

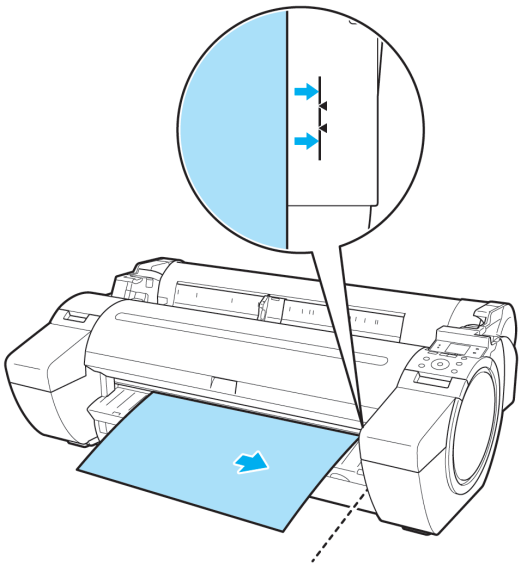

Important

- To disable this message (if it is displayed repeatedly despite reloading paper, for example), choose **Off** or **Loose** in the **Skew Check Lv.** setting of the printer menu. However, this may cause jams and printing problems because paper may be askew when printed. Also, the Platen may become soiled, which may soil the back of the next document when it is printed.

Paper not aligned with right guide.

Cause	Corrective Action
When paper was loaded, it was not aligned with the guide on the right side.	Follow these step to reload a sheet. 1. Push the Release Lever back. 2. Pull out the sheet. 3. Pull the Release Lever forward. 4. Reload the sheet, aligning it with the guide on the right.

Cannot detect papr

Cause	Corrective Action
The printer could not detect the paper.	Reload the paper as follows. 1. Remove the paper and press the **OK** button. 2. Reload the paper. (See "Loading Sheets in the Printer.") ➔P.21 (See "Loading Rolls in the Printer.") ➔P.15

Leading edge detection error.

Cause	Corrective Action
The leading edge of the paper cannot be detected.	Follow these step to reload a sheet. 1. Push the Release Lever back. 2. Reload the sheet straight, in the correct position. (See "Loading Sheets in the Printer.") ➔P.21

Paper cutting failed.

Cause	Corrective Action
There are sheets left on the Ejection Guide.	1. Push the Release Lever back and remove the paper. 2. Load the paper. 3. Pull the Release Lever forward. 4. If "**Not finished printing. Finish printing remaining jobs?**" is shown on the Display Screen, press the **OK** button. Printing will resume, starting from the page on which the error occurred. (See "Loading Rolls in the Printer.") ➔P.15
There is a foreign object by the Output Tray, obstructing the Cutter Unit.	1. Lift the Top Cover and remove the foreign object. 2. If "**Not finished printing. Finish printing remaining jobs?**" is shown on the Display Screen, press the **OK** button. Printing will resume, starting from the page on which the error occurred.
You are not using the printer under the recommended environmental conditions for the paper.	Use the printer only where the recommended environmental conditions for the paper are met. Note that various environmental conditions are recommended for various types of paper. For details on the recommended environmental conditions for paper, see **Paper Reference Guide**." (See "Displaying the Paper Reference Guide.") ➔User's Guide
You are using paper that is not compatible with automatic cutting.	1. Specify **Manual** as the cutting method and use scissors or a cutting tool to cut the roll. (See "Specifying the Cutting Method for Rolls.") ➔User's Guide For information about paper that is compatible with automatic cutting, see the **Paper Reference Guide**. (See "Displaying the Paper Reference Guide.") ➔User's Guide 2. Push the Release Lever back and remove the paper.

Cause	Corrective Action
In other cases, the Cutter Unit may be damaged.	Contact your Canon dealer for assistance.

End of paper feed.

Cause	Corrective Action
Although an attempt was made to advance the paper manually, it reached the limit position that can be advanced.	Canceling manual advancing. (See "Feeding Roll Paper Manually.") ➔User's Guide

Rel lever is in wrong position.

Cause	Corrective Action
The Release Lever is pushed back.	Pull the Release Lever forward. Turn off the printer and wait a while before restoring power.

Borderless printng not possible.

Cause	Corrective Action
The print job received specifies a type or width of paper that is not compatible with borderless printing.	Follow these steps to change the settings of the print job to enable borderless printing. 1. Press ▲ or ▼ to select **Stop Printing**, and then press the **OK** button. 2. Make sure the correct printer driver for the printer is selected and try printing again. For information on types of paper compatible with borderless printing, refer to the **Paper Reference Guide**. (See "Displaying the Paper Reference Guide.") ➔User's Guide }
	Press ▲ or ▼ to select **Print With Border**, and then press the **OK** button to continue printing. The document will be printed with a border.
The loaded paper is a size not compatible with borderless printing.	Press ▲ or ▼ to select **Stop Printing**, and then press the **OK** button.
	Replace the paper with paper compatible for borderless printing as follows. 1. Press ▲ or ▼ to select **Change Paper**, and then press the **OK** button. (See "Removing the Roll from the Printer.") ➔P.18 (See "Removing the Roll Holder from Rolls.") ➔User's Guide 2. Replace the paper with paper compatible for borderless printing. (See "Attaching the Roll Holder to Rolls.") ➔P.12 (See "Loading Rolls in the Printer.") ➔P.15 The printer now starts printing the print job. For information on types of paper compatible with borderless printing, refer to the **Paper Reference Guide**. (See "Displaying the Paper Reference Guide.") ➔User's Guide }
	Press ▲ or ▼ to select **Print With Border**, and then press the **OK** button to continue printing. The document will be printed with a border.
Because paper expands or contracts depending on the environment of use, it may become narrower or wider than the supported width for borderless printing.	Use each type of paper only where the recommended environmental conditions are met. For details on environmental conditions for various paper, see the **Paper Reference Guide**. (See "Displaying the Paper Reference Guide.") ➔User's Guide

Paper position not suitable for borderless printing.

Cause	Corrective Action
Because paper expands or contracts depending on the environment of use, it may become narrower or wider than the supported width for borderless printing.	Press ▲ or ▼ to select **Stop Printing**, and then press the **OK** button. Use each type of paper only where the recommended environmental conditions are met. For details on environmental conditions for various paper, see the **Paper Reference Guide**. (See "Displaying the Paper Reference Guide.") ➔User's Guide
The paper is loaded askew.	Press ▲ or ▼ to select **Fix Paper Position** and straighten the paper so that the edges are between the ink grooves for borderless printing. Insert the roll firmly until it touches the flange of the Roll Holder. (See "Attaching the Roll Holder to Rolls.") ➔P.12
	Press ▲ or ▼ to select **Print With Border**, and then press the **OK** button to continue printing. The document will be printed with a border.
	Press ▲ or ▼ to select **Stop Printing**, and then press the **OK** button.

Roll paper is not securely in contact with roll holder.

Cause	Corrective Action
When the roll was loaded, the roll was not inserted firmly all the way on the Roll Holder.	Follow these steps to reload the roll. 1. Press the **OK** button and remove the roll holder from the printer. 2. Insert the roll firmly on the Roll Holder until it touches the flange. (See "Attaching the Roll Holder to Rolls.") ➔P.12 3. Load the Roll Holder in the printer.

Messages regarding ink

Ink insufficient. 121
No ink left. 121
Remaining level of the ink cannot be correctly detected. Check ink tank. 121
Cannot detect ink level correctly. Close tank cover. 121

Close Ink Tank Cover 122
Ink tank is empty. 122
Not much ink is left. 122
Check if ink tank is set, and its color and direction. 122
The following ink tanks cannot be recognized. 122
Wrong ink tank. 122
Do not pull out ink tank. 122

Ink insufficient.

Cause	Corrective Action
The ink level is low, so you cannot print, clean the Printhead, or do other operations that require ink. There is not enough ink of the color with × displayed above the remaining ink indicator.	Press ▲ or ▼ to select **Rep. Ink Tank**, and then press the **OK** button. Replace the Ink Tank that is low with a new Ink Tank. (See "Replacing Ink Tanks.") ➔P.25
	Press ▲ or ▼ to select **Continue to print**, and then press the **OK** button to resume printing. However, note that this error may affect the printing quality.
	Press the **OK** button, open the Ink Tank Cover, and replace the Ink Tank for the color that does not have enough ink. (See "Replacing Ink Tanks.") ➔P.25

No ink left.

Cause	Corrective Action
There is no ink left. There are no ink colors with × displayed above the remaining ink indicator.	Press the **OK** button, open the Ink Tank Cover, and replace the Ink Tank for the color that is out of ink. (See "Replacing Ink Tanks.") ➔P.25

Remaining level of the ink cannot be correctly detected. Check ink tank.

Cause	Corrective Action
Ink level detection cannot work correctly if you use refill ink tanks.	The refill ink tank can no longer be used. See the section **Ink level detection** and take the appropriate action. (See "Ink Level Detection.") ➔P.109

Cannot detect ink level correctly. Close tank cover.

Cause	Corrective Action
The remaining ink level could not be correctly detected.	Close the Ink Tank Cover. The buzzer stops sounding. Next, "**No ink left.**" is displayed and see "No ink left.." ➔P.121

Close Ink Tank Cover

Cause	Corrective Action
The Ink Tank Cover is open. 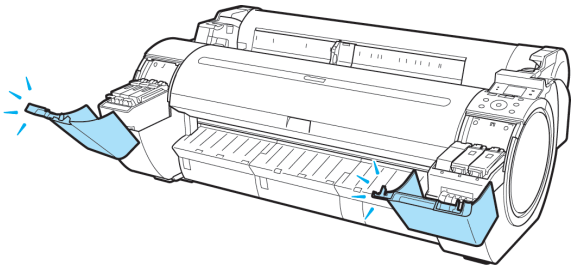	Close the Ink Tank Cover.

Ink tank is empty.

Cause	Corrective Action
There is no ink left in an ink tank. There are no ink colors with × displayed above the remaining ink indicator in the Ink tab top screen. (See "Checking Ink Tank Levels.") ➔User's Guide	Open the Ink Tank Cover, and replace the Ink Tank for the color that is out of ink. (See "Replacing Ink Tanks.") ➔P.25

Not much ink is left.

Cause	Corrective Action
Not much ink is left.	Prepare a new Ink Tank. We recommend replacing the Ink Tank with a new Ink Tank at this point if you plan to print large-format or high-quantity jobs.

Check if ink tank is set, and its color and direction.

Cause	Corrective Action
There is no Ink Tank of the indicated color in the printer.	Load the Ink Tank. (See "Replacing Ink Tanks.") ➔P.25
There is a problem with the Ink Tank.	Replace it with a new Ink Tank. (See "Replacing Ink Tanks.") ➔P.25

The following ink tanks cannot be recognized.

Cause	Corrective Action
An Ink Tank that is incompatible with the printer is loaded.	Load an Ink Tank that is compatible with the printer. (See "Replacing Ink Tanks.") ➔P.25

Wrong ink tank.

Cause	Corrective Action
The Ink Tank in the printer is incompatible.	Load an Ink Tank specified for use with the printer. (See "Replacing Ink Tanks.") ➔P.25

Do not pull out ink tank.

Cause	Corrective Action
The Ink Tank was removed using an incorrect procedure.	Install the Ink Tank that was removed. The buzzer stops sounding. Next, replace the Ink Tank using the procedure on the Display Screen in the Control Panel.

Messages regarding printing or adjustment

Cannot adjust printhead. 124
Borderless printng not possible. 119
Cannot adjust paper feed. 123
Check printed document. 123

Cannot adjust paper feed.

Cause	Corrective Action
The Printhead nozzles are clogged.	Execute **Adj. Quality** again, as follows. 1. Press the **OK** button to clear the error. 2. Print a test pattern to check the nozzles. (See "Checking for Nozzle Clogging.") ➔User's Guide 3. Clean the Printhead if the nozzles are clogged. (See "Cleaning the Printhead.") ➔P.44 4. Execute **Adj. Quality** again. (See "Automatic Banding Adjustment.") ➔User's Guide
Highly transparent film is loaded that cannot be used for automatic feed amount adjustment.	Press the **OK** button to clear the error, and then adjust the feed amount manually. (See "Manual Banding Adjustment.") ➔User's Guide

Check printed document.

Cause	Corrective Action
The Printhead nozzles are becoming clogged.	If printing is faint, clean the Printhead. (See "Cleaning the Printhead.") ➔P.44

Messages regarding printheads

Cannot adjust printhead. 124
Wrong printhead. 124
Printhead error 124
Cannot recognize print head. 124
Execute printhead cleaning. 125

Cannot adjust printhead.

Cause	Corrective Action
The Printhead nozzles are clogged.	Execute **Head Posi. Adj.** again, as follows. 1. Press the **OK** button to clear the error. 2. Print a test pattern to check the nozzles. (See "Checking for Nozzle Clogging.") ➔User's Guide 3. Clean the Printhead if the nozzles are clogged. (See "Cleaning the Printhead.") ➔P.44 4. Execute **Head Posi. Adj.** again. (See "Automatic Adjustment to Straighten Lines and Colors.") ➔P.79
The Printhead cannot be aligned; highly transparent film is loaded.	Press the **OK** button to clear the error. We recommend using a type of paper that you often use, other than film, for Printhead adjustment. (See "Automatic Adjustment to Straighten Lines and Colors.") ➔P.79
The Printhead is installed crooked.	Straighten the Printhead as follows, and then execute **Head Posi. Adj.** again. 1. Press the **OK** button to clear the error. 2. Use **Head Inc. Adj.** to adjust the angle of inclination of the Printhead. (See "Adjusting Line Misalignment.") ➔User's Guide 3. Execute **Head Posi. Adj.** again. (See "Automatic Adjustment to Straighten Lines and Colors.") ➔P.79

Wrong printhead.

Cause	Corrective Action
An incompatible Printhead has been installed.	Open the Top Cover and replace the Printhead with a new one. (See "Replacing the Printhead.") ➔P.30

Printhead error

Cause	Corrective Action
There is a problem with the Printhead.	Open the Top Cover and replace the Printhead with a new one. (See "Replacing the Printhead.") ➔P.30

Cannot recognize print head.

Cause	Corrective Action
No Printhead is installed.	Follow these steps to install the Printhead. 1. Open the Top Cover. 2. Install the Printhead. (See "Replacing the Printhead.") ➔P.30
The Printhead cannot be recognized because it is not installed correctly.	Follow these steps to reinstall the Printhead. 1. Open the Top Cover.

Cause	Corrective Action
The Printhead cannot be recognized because it is not installed correctly.	2. Reinstall the Printhead. (See "Replacing the Printhead.") ➔P.30

Execute printhead cleaning.

Cause	Corrective Action
The Printhead nozzles are clogged.	Follow these steps to clean the Printhead. 1. Stop printing by pressing ▲ or ▼ to select **Stop Printing**. 2. Clean the Printhead. (See "Cleaning the Printhead.") ➔P.44 If the message is still displayed when printing, replace the Printhead. (See "Replacing the Printhead.") ➔P.30
	Press ▲ or ▼ to select **Print**, and then press the **OK** button to resume printing. However, note that this error may affect the printing quality.

Messages regarding the maintenance cartridge

Insert the maintenance cartridge. 126
Wrong maintenance cartridge. 126
Maint. cart. The level is low 126
No Maintenance Cartridge capacity. 126
Maintenance cartridge full. 126
Maintenance cartridge problem. 126

Insert the maintenance cartridge.

Cause	Corrective Action
The Maintenance Cartridge is not installed.	Install the Maintenance Cartridge. (See "Replacing the Maintenance Cartridge.") →P.37

Wrong maintenance cartridge.

Cause	Corrective Action
A Maintenance Cartridge for a different model of printer is installed.	Replace it with the Maintenance Cartridge for your particular model. (See "Maintenance Cartridge.") →User's Guide

Maint. cart. The level is low

Cause	Corrective Action
The Maintenance Cartridge is almost full.	You can continue to print, but prepare a new Maintenance Cartridge to use when the message for replacement is displayed.

No Maintenance Cartridge capacity.

Cause	Corrective Action
The Maintenance Cartridge cannot absorb enough ink for Printhead cleaning or other operation.	After confirming that the printer has stopped operating, replace the Maintenance Cartridge. (See "Replacing the Maintenance Cartridge.") →P.37

Maintenance cartridge full.

Cause	Corrective Action
The Maintenance Cartridge is full.	After confirming that the printer has stopped operating, replace the Maintenance Cartridge. (See "Replacing the Maintenance Cartridge.") →P.37

Maintenance cartridge problem.

Cause	Corrective Action
An incompatible or used Maintenance Cartridge has been installed.	Install an unused Maintenance Cartridge specified for use with the printer. (See "Replacing the Maintenance Cartridge.") →P.37

Messages regarding HP-GL/2

This type of paper is not compatible with HP-GL/2. 127
GL2: Wxxxx The memory is full. (xxxx is 0501, 0903, or 0904) 127
GL2: W0502 The parameter is out of range. 127
GL2: W0504 This command is not supported. 127

This type of paper is not compatible with HP-GL/2.

Cause	Corrective Action
The printer has received a HP-GL/2 print job that cannot be printed on the paper that has been advanced.	Follow these steps to replace the type of paper in the printer. 1. Press ▲ or ▼ to select **Stop Printing**, and then press the **OK** button. 2. Replace the paper with a type compatible with HP-GL/2. For details on paper compatible with HP-GL/2, refer to the **Paper Reference Guide**. (See "Displaying the Paper Reference Guide.") ➔User's Guide
	Press ▲ or ▼ to select **Print**, and then press the **OK** button to resume printing. However, note that this error may cause paper jams and affect the printing quality.

GL2: Wxxxx The memory is full. (xxxx is 0501, 0903, or 0904)

Cause	Corrective Action
The printer memory is full.	Because the entire print job could not be received, the printer may not be able to print the entire original. Check the printing results.
	In the Control Panel menu, setting **On-the-Fly** to **On** may enable printing. However, check the printing results because the image may be incomplete in some cases.

GL2: W0502 The parameter is out of range.

Cause	Corrective Action
A parameter specified in a HP-GL/2 command is out of the supported range.	Check the print job.
	If you have specified **ProcessingOption** > **Warning** > **On** in the Control Panel menu, set it to **Off** instead.

GL2: W0504 This command is not supported.

Cause	Corrective Action
The printer has received an unsupported HP-GL/2 command.	Check the print job.
	If you have specified **ProcessingOption** > **Warning** > **On** in the Control Panel menu, set it to **Off** instead.

Other Messages

GARO Wxxxx (x represents a number) 128
ERROR Exxx-xxxx (x represents a letter or number) 128
Hardware error. xxxxxxxx-xxxx (x represents a letter or number) 128
Top cover is open. 129
Prepare for parts replacement. 129
Parts replacement time has passed. 129
Unknown file. 129
Multi-sensor error 129
Error in cutter position. 129

GARO Wxxxx (x represents a number)

Cause	Corrective Action
There is a problem with the print job.	Try printing again, using the correct printer driver.
	It is also possible to continue printing in this state. However, you may not be able to obtain the desired printing results.

ERROR Exxx-xxxx (x represents a letter or number)

Cause	Corrective Action
An error requiring service may have occurred. ! ERROR Exxx-xxxx Call for service. OK: Printer Info.	Write down the error code and message, turn off the printer, and contact your Canon dealer for assistance.

Hardware error. xxxxxxxx-xxxx (x represents a letter or number)

Cause	Corrective Action
The last portion of roll paper was used during a print job. The paper was not advanced because the trailing edge is taped to the roll.	Turn off the printer and remove the roll from the printer before restoring power.
Fastening tape or the Belt Stopper has not been removed inside the Top Cover.	Turn off the printer, open the Top Cover and remove the tape or the Belt Stopper before restoring power.
An error requiring service may have occurred. ! Hardware error. xxxxxxxx-xxxx Turn off printer, wait, then turn on again. OK: Printer Info.	Turn off the printer and wait at least three seconds before restoring the power. If the message is displayed again, write down the error code and message, turn off the printer, and contact your Canon dealer for assistance.

Hardware error. 03130031-2F7x (x is 0, 1, or 2)

Cause	Corrective Action
The ink tank is not installed correctly.	Turn off the power, remove and then reinstall all of the ink tanks, and then turn on the power. If the same message is displayed again, write down the error code and message, turn off the printer, and contact your Canon dealer for assistance. (See "Replacing Ink Tanks.") →P.25

Top cover is open.

Cause	Corrective Action
The printer has detected that the Top Cover is open.	Open the Top Cover fully, remove any foreign objects, and close the Top Cover again.
	If the error occurs again, close the Top Cover, turn off the printer, and wait a while before restoring power.

Prepare for parts replacement.

Cause	Corrective Action
It is almost time to replace consumables for which service is required.	If "**Parts replacement time has passed.**" is displayed, you can continue to use the printer for some time. Contact your Canon dealer for assistance.

Parts replacement time has passed.

Cause	Corrective Action
It is past the recommended time to replace consumables for which service is required.	Contact your Canon dealer for assistance.

Unknown file.

Cause	Corrective Action
Data sent to keep the printer up to date (such as paper information) is in the wrong format.	Check the data. Turn off the printer and wait a while before restoring power, and then resend the data.
You have uploaded firmware for a different model.	Check the firmware version. Turn off the printer and wait a while before restoring power, and then resend the firmware.
	If the message is displayed again, contact your Canon dealer for assistance.

Multi-sensor error

Cause	Corrective Action
Direct sunlight or strong lighting may be shining on the printer and causing the sensor to malfunction.	Take steps to ensure the printer is not used when exposed to direct sunlight or strong lighting.
The performance of a sensor inside the printer may be impaired.	Turn off the printer and wait at least three seconds before restoring the power. If the message is displayed again, contact your Canon dealer for assistance.

Error in cutter position.

Cause	Corrective Action
The Cutter Unit stops in the middle of cutting.	1. Push the Release Lever back and remove the paper. 2. Pull the Release Lever forward.

Error Messages

Borderless printng not possible. 119

Cannot adjust paper feed. 123
Cannot adjust printhead. 124
Cannot detect ink level correctly. Close tank cover. 121
Cannot detect papr 118
Cannot recognize print head. 124
Check if ink tank is set, and its color and direction. 122
Check printed document. 123
Close Ink Tank Cover 122

Do not pull out ink tank. 122

End of paper feed. 119
ERROR Exxx-xxxx (x represents a letter or number) 128
Error in cutter position. 129
Execute printhead cleaning. 125

GARO Wxxxx (x represents a number) 128
GL2: W0502 The parameter is out of range. 127
GL2: W0504 This command is not supported. 127
GL2: Wxxxx The memory is full. (xxxx is 0501, 0903, or 0904) 127

Hardware error. xxxxxxxx-xxxx (x represents a letter or number) 128

Ink insufficient. 121
Ink tank is empty. 122
Insert the maintenance cartridge. 126
Insufficient paper for job 115

Leading edge detection error. 118

Maint. cart. The level is low 126
Maintenance cartridge full. 126
Maintenance cartridge problem. 126
MediaType Mismatch 112
Multi-sensor error 129

No ink left. 121
No Maintenance Cartridge capacity. 126
Not much ink is left. 122

Paper cutting failed. 118
Paper is crooked. 117
Paper jam 117
Paper mismatch 112
Paper not aligned with right guide. 118
Paper position not suitable for borderless printing. 120
Paper size not detected. 114
PaprWidth Mismatch 114
Parts replacement time has passed. 129
Prepare for parts replacement. 129
Printhead error 124

Regular printing is selected, but a roll is loaded. 116
Rel lever is in wrong position. 119
Remaining level of the ink cannot be correctly detected. Check ink tank. 121
Roll paper is not securely in contact with roll holder. 120
Roll printing is selected, but sheets are loaded. 116
Roll printing is selected. 115

Sheet printing is selected. 116

The following ink tanks cannot be recognized. 122
The paper is too small. 113
The paper is too small. 113
The roll is empty. 116
This paper cannot be used. 115
This type of paper is not compatible with HP-GL/2. 127
Top cover is open. 129

Unknown file. 129

Wrong ink tank. 122
Wrong maintenance cartridge. 126
Wrong printhead. 124

Index

A

Adjust Length 81, 82
Adjust Printer 81
Adobe RGB 5

C

CAD 82
Cleaning 3, 30, 42, 44, 59
Clearing a Jammed Sheet 87
Cutting Mode 47

D

Device Setup Utility 104

E

Ejection Guide 43, 58

F

Feed Priority 81

G

GARO Wxxxx (x represents a number) 128

H

Hardware error 128
Head Cleaning 44
Head Cleaning A 44
Head Cleaning B 44
Holder Stopper 60, 65

I

If a message is displayed 37
Ink level 109
Ink level detection 109

L

Large-Format Printing 77

M

Maintenance Cartridge 3, 37, 57, 62, 126
Menu Operations 48
Menu Structure 51

N

Navigate 47

P

Paper Feed Slot 17, 22, 57, 90
Power 2, 46, 58, 64, 67
Preparing to Transfer the Printer 62
Print Priority 81
Printer menu 48
Printhead 3, 30, 44, 58, 59, 60, 79, 96, 124

R

Removing printer drivers 104
Removing the Roll 18
Replace P.head 31
Replacing Ink Tanks 25
Roll Holder 12, 16, 19, 57, 60, 65, 68
Rotate Page 90 degrees 75

S

Strange Sound 108

W

When to replace 30

iPF780 Series Basic Guide

ENG

© CANON INC. 2013