Canon

PUB. DIE-0489-001A

PAL

4K Camcorder

XC15

Quick Guide

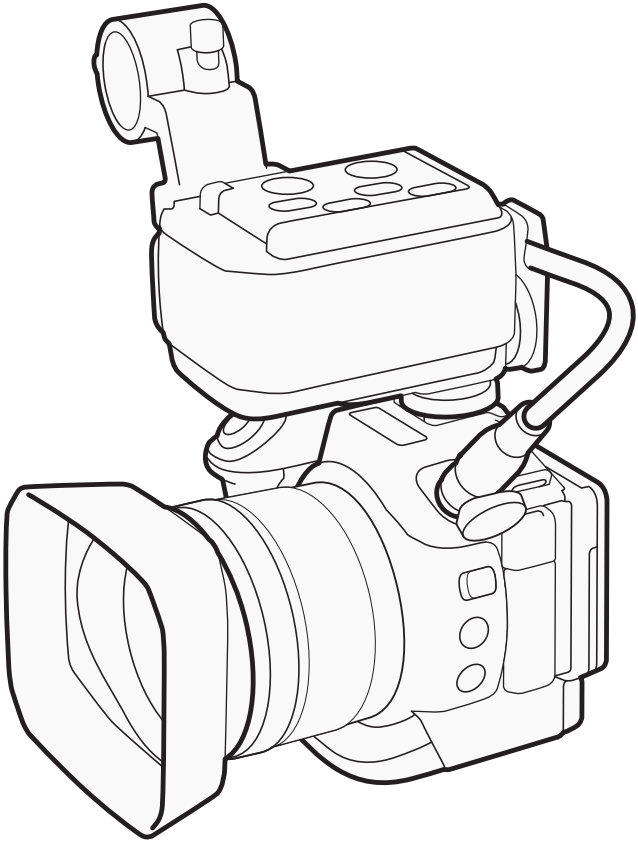

This guide introduces only basic functions. To download the Instruction Manual, which contains more advanced information, refer to page 5.

4K XF-AVC HDMI Wi Fi CERTIFIED

Important Usage Instructions

WARNING – To reduce the risk of electric shock, do not expose this product to dripping or splashing.

To reduce the risk of fire or electric shock, do not expose this apparatus to dripping or splashing, and do not place objects filled with liquids, such as vases, on the apparatus.

WARNING
TO REDUCE THE RISK OF ELECTRIC SHOCK AND TO REDUCE ANNOYING INTERFERENCE, USE THE RECOMMENDED ACCESSORIES ONLY.

COPYRIGHT WARNING:
Unauthorized recording of copyrighted materials may infringe on the rights of copyright owners and be contrary to copyright laws.

The Mains plug is used as the disconnect device. The Mains plug shall remain readily operable to disconnect the plug in case of an accident.

CA-946 identification plate is located on the bottom.

Only for European Union and EEA (Norway, Iceland and Liechtenstein)

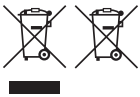

These symbols indicate that this product is not to be disposed of with your household waste, according to the WEEE Directive (2012/19/EU), the Battery Directive (2006/66/EC) and/or national legislation implementing those Directives.
If a chemical symbol is printed beneath the symbol shown above, in accordance with the Battery Directive, this indicates that a heavy metal (Hg = Mercury, Cd = Cadmium, Pb = Lead) is present in this battery or accumulator at a concentration above an applicable threshold specified in the Battery Directive.
This product should be handed over to a designated collection point, e.g., on an authorized one-for-one basis when you buy a new similar product or to an authorized collection site for recycling waste electrical and electronic equipment (EEE) and batteries and accumulators. Improper handling of this type of waste could have a possible impact on the environment and human health due to potentially hazardous substances that are generally associated with EEE. Your cooperation in the correct disposal of this product will contribute to the effective usage of natural resources.
For more information about the recycling of this product, please contact your local city office, waste authority, approved scheme or your household waste disposal service or
visit www.canon-europe.com/weee, or www.canon-europe.com/battery.

REGIONS OF USE
XC15 is in compliance (as of November 2016) with the radio signal regulations of the regions listed below. For details on other regions where it can be used, make inquiries with the contacts listed on the supplied warranty card or leaflet.

REGIONS	Radio channels prohibited for outdoor use
Australia, Austria, Belgium, Bulgaria, Croatia, Cyprus, Czech Republic, Denmark, Estonia, Finland, France, Germany, Greece, Hong Kong S.A.R., Hungary, Iceland, Ireland, Italy, Latvia, Liechtenstein, Lithuania, Luxembourg, Malta, Netherlands, New Zealand, Norway, Poland, Portugal, Romania, Slovakia, Slovenia, Spain, Sweden, Switzerland, United Kingdom	Channels 36 to 64
Russia, Singapore	Not prohibited

Statement on EC directive

Hereby, Canon Inc. declares that this equipment is in compliance with Directive 2014/53/EU. The full text of the EU declaration of conformity is available at the following Internet address:
http://www.canon-europe.com/ce-documentation

Wi-Fi frequency range: 2401 MHz - 2483 MHz
Wi-Fi maximum output power: 16.1 dBm

Model
ID0081: XC15

Complies with IDA
Standards
DB00671

Precautions About the Battery Pack

DANGER!

Treat the battery pack with care.

- Keep it away from fire (or it might explode).
- Do not expose the battery pack to temperature higher than 60 °C. Do not leave it near a heater or inside a car in hot weather.
- Do not try to disassemble or modify it.
- Do not drop it or subject it to shocks.
- Do not get it wet.

Important Note about the Recording Media

- Observe the following precautions while the ACCESS indicator is on or flashing in red. Failure to do so may result in permanent data loss or damage to the recording media.
  - Do not disconnect the camcorder's power source or turn off the camcorder.
  - Do not open the recording media slot cover.
  - Do not change the camcorder's operating mode.

Viewing the Certification Logo

You can open the [System Setup] ➤ [5] (in mode) or [4] (in mode) ➤ [Certification Logo Display] screen to view some certification information for this camcorder.

Trademark Acknowledgements

- SD, SDHC and SDXC Logos are trademarks of SD-3C, LLC.
- Canon is an authorized licensee of the CFast 2.0™ trademark, which may be registered in various jurisdictions.
- Microsoft and Windows are trademarks or registered trademarks of Microsoft Corporation in the United States and/or other countries.
- Apple, App Store, Mac OS, Final Cut Pro are trademarks of Apple Inc., registered in the U.S. and other countries.
- IOS is a trademark or registered trademark of Cisco in the U.S. and other countries and is used under license.
- Avid and Media Composer are trademarks or registered trademarks of Avid Technology, Inc. or its subsidiaries in the United States and/or other countries.
- Wi-Fi is a registered trademark of the Wi-Fi Alliance.
- Wi-Fi Certified, WPA, WPA2, and the Wi-Fi Certified logo are trademarks of the Wi-Fi Alliance.
- WPS as used on the camcorder's settings, onscreen displays and in this manual signifies Wi-Fi Protected Setup.
- The Wi-Fi Protected Setup Identifier Mark is a mark of the Wi-Fi Alliance.
- JavaScript is a trademark or registered trademark of Oracle Corporation, its affiliates or subsidiaries in the United States and other countries.
- HDMI, the HDMI logo and High-Definition Multimedia Interface are trademarks or registered trademarks of HDMI Licensing LLC in the United States and other countries.
- Other names and products not mentioned above may be trademarks or registered trademarks of their respective companies.
- This device incorporates exFAT technology licensed from Microsoft.
- This product is licensed under AT&T patents for the MPEG-4 standard and may be used for encoding MPEG-4 compliant video and/or decoding MPEG-4 compliant video that was encoded only (1) for a personal and noncommercial purpose or (2) by a video provider licensed under the AT&T patents to provide MPEG-4 compliant video. No license is granted or implied for any other use for MPEG-4 standard.

Supplied Accessories

The following accessories are supplied with the camcorder.

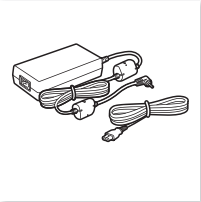

CA-946 AC Adapter
(incl. power cord)

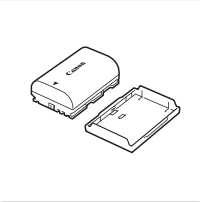

LP-E6N Battery Pack
(incl. protective cover)

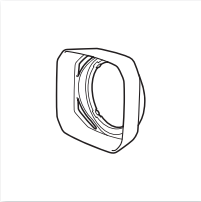

Lens Hood

Viewfinder Unit
(incl. viewfinder unit cover)

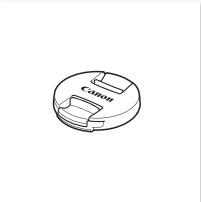

Lens Cap

MA-400 Microphone Adapter

UN-5 Unit Cable

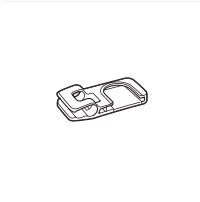

Cable Clamp

Shoulder Strap

IFC-300PCU/S USB Cable

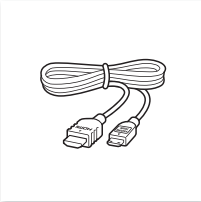

HTC-100/S High Speed HDMI Cable

Table of Contents

04 Supplied Accessories
06 Names of Parts
13 Onscreen Icons and Displays
18 Step 1: Charging the Battery Pack
21 Step 2: Preparing the Camcorder
24 Step 3: Date, Time and Language Settings
26 Step 4: Basic Operation of the Camcorder
29 Step 5: Preparing Recording Media
32 Recording Video and Taking Photos
35 Playback
38 Connecting to an External Monitor
39 Saving Clips to a Computer
40 Overview of Wi-Fi Functions
41 Abridged Specifications

About the Camcorder's Wi-Fi Functions

You can enjoy a variety of Wi-Fi functions with your camcorder. To read about all the convenient ways you can use your camcorder using Wi-Fi, refer to the full-version Instruction Manual (PDF file).

Downloading the Full-version Instruction Manual (PDF File)

To learn how to use the more advanced functions, to read important handling precautions and to consult the troubleshooting section if an error message is displayed, download the full-version Instruction Manual (PDF file). Access the following Web site. Click on your country/region and follow the onscreen instructions to download the PDF file.

www.canon.com/icpd

Names of Parts

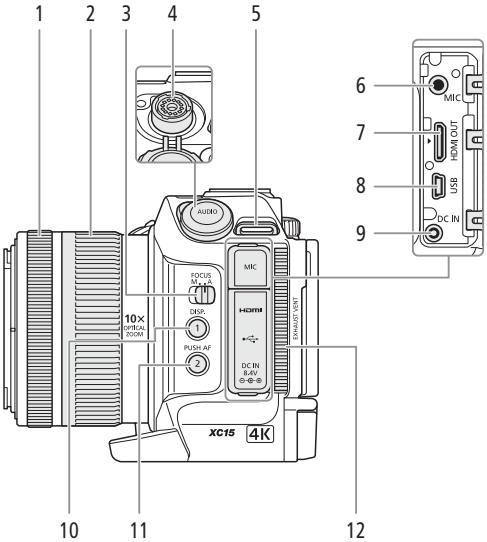

1 Focus ring (PDF 74)
2 Zoom ring (PDF 73)
3 FOCUS (focus mode) switch (PDF 74)
4 AUDIO terminal (PDF 24)
5 Shoulder strap mount (PDF 27)
6 MIC (microphone) terminal (PDF 87)
7 HDMI OUT terminal (PDF 121)
8 USB terminal (PDF 100)
9 DC IN terminal (□ 18)
10 DISP. (display) button (PDF 51)/ Assignable button 1 (PDF 105)
11 PUSH AF (momentary autofocus) button (PDF 79)/ Assignable button 2 (PDF 105)
12 Exhaust ventilation outlet (PDF 52)

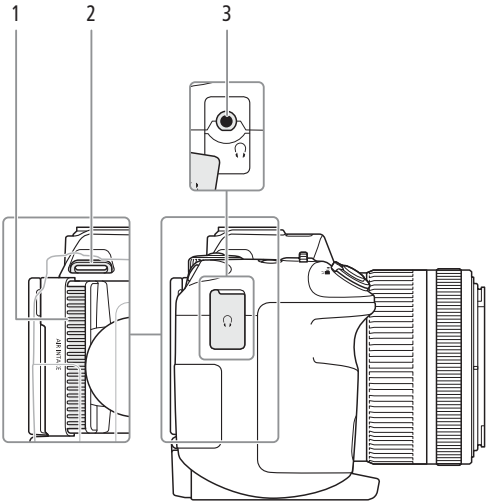

1 Air intake vent (PDF 52)
2 Shoulder strap mount (PDF 27)
3 (headphone) terminal (PDF 93)

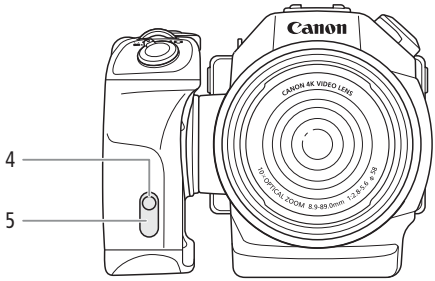

4 Tally lamp (PDF 42)
5 Remote sensor (PDF 40): For operating the camcorder with the optional RC-6 Remote Controller.

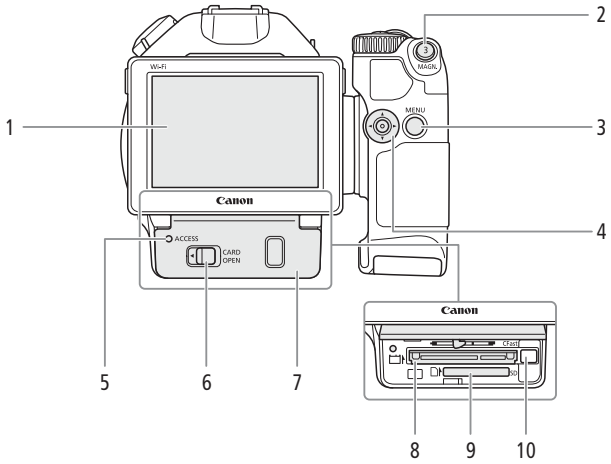

1 LCD touch screen (📖 23)
2 MAGN. (magnification) button (PDF 77)/ Assignable button 3 (PDF 105)
3 MENU button (PDF 30)
4 Joystick (PDF 30)
5 ACCESS indicator (📖 29)
6 CARD OPEN (open recording media slot cover) lever (📖 29)
7 Recording media slot cover
8 CFast card slot (📖 29)
9 SD card slot (📖 29)
10 CFast card release button (PDF 35)

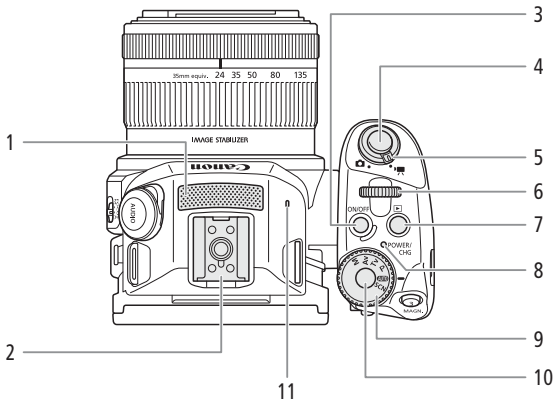

1 Built-in microphone (PDF 87)
2 Accessory shoe (□ 21, PDF 87): For attaching the supplied MA-400 Microphone Adapter.
3 ON/OFF button (□ 24)
4 START/STOP button (□ 32)/PHOTO button (□ 32): When you are recording video clips, this button is referred to in this manual as the START/STOP button; when you are shooting photos, it is referred to as the PHOTO button.
5 Movie/photo switch (□ 26)
6 Control dial (PDF 55)
7 ▶ (playback) button (PDF 108)
8 POWER/CHG (power/battery charging) indicator (□ 18)
9 Shooting mode dial (PDF 55)
10 Shooting mode dial button (PDF 55)
11 Built-in speaker (PDF 113)

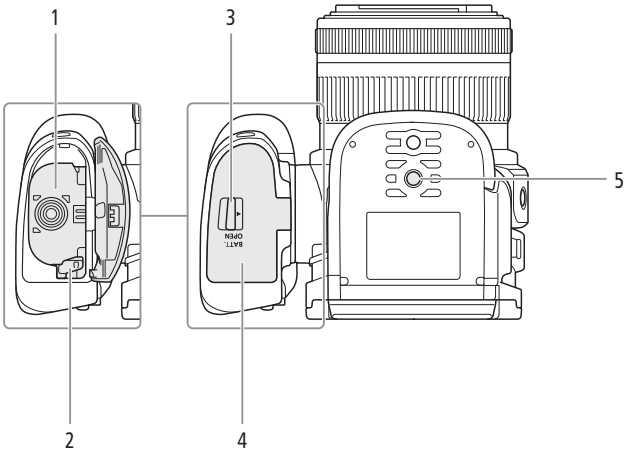

1 Battery compartment
2 Battery release latch (📖 18)
3 BATT. OPEN (open battery compartment) switch (📖 18)
4 Battery compartment cover (📖 18)
5 Tripod socket (PDF 27)

MA-400 Microphone Adapter

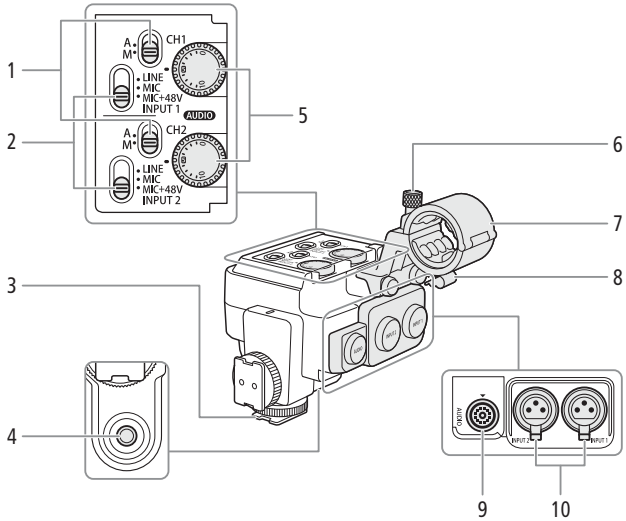

1 Audio recording level switches for CH1 (top) and CH2 (bottom) (PDF 90)
2 INPUT 1 (top)/ INPUT 2 (bottom) switches (audio source selection) (PDF 88)
3 Attachment base
4 Socket for 0.64 cm (1/4") screws
5 AUDIO (audio level) dials for CH1 (top) and CH2 (bottom) (PDF 90)
6 Microphone lock screw (21)
7 Microphone holder: For microphones with a diameter of Ø19 mm to 20 mm.
8 Microphone cable clamp
9 AUDIO terminal (21)
10 INPUT 1 (right) and INPUT 2 (left) terminals (PDF 88): For microphones and external audio sources with an XLR connector.

Viewfinder unit

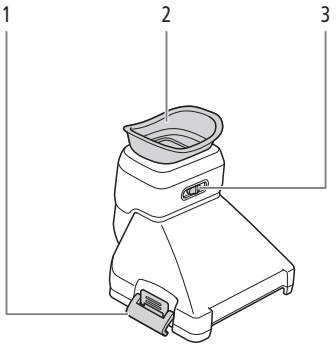

1 Viewfinder unit latch (PDF 22)
2 Eye cup
3 Dioptric adjustment lever (PDF 23)

Onscreen Icons and Displays

Refer to this section for an explanation of the various icons and screen displays that appear in [🎥] and [📷] modes. They may differ depending on the shooting mode and settings in the FUNC. menu and setup menus.
Some icons that appear in [🎥] mode also appear in [📷] mode. If the camcorder is in [📷] mode and you do not find an icon in these tables for [🎥] mode, refer to *Icons that appear during [📷] mode* (📖 16).

Icons that appear during [🎥] mode

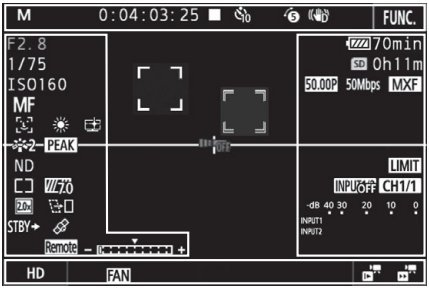

Icons on the top of the screen

Icon/Display	Description	PDF
M, Av, Tv, P, AUTO, 🙂, 🔍, 🌷, 👤, 🏃, 🌅, 🌃, 🏠, ▦	Shooting mode	55
0:00:00:00	Time code	84
●, ■	Recording operation ●: recording, ■: record standby	41
2, 10, 0, 🎥	Self timer	99
📷	Appears when recording a photo in record standby mode.	43
5	Pre-recording mode	97
✋, ✋D, ✋P	Image stabilizer	81
[FUNC.]	Button to open the FUNC. menu.	30, 137

Icons on the left side of the screen

Icon/Display	Description	PDF
F0.0	Aperture value	55, 58
1/0000, 000.00°	Shutter speed, shutter angle	55, 58
±0 0/0, ✳	±0 0/0: AE shift, ✳: exposure locked	65
ISO00000, 00.0dB	ISO00000: ISO speed, 00.0dB: gain	55

ISO, GAIN	ISO: auto ISO limit, GAIN: AGC limit	63
AF, MF 0.0m	Focus mode • While focusing in manual focus mode, the estimated distance to the subject will be displayed as well.	74, 76
	Face detection and tracking	79
, , , , , , K, ,	White balance	69
	Highlight priority look	71
2, 3, 4, 5, 6, 7, 8, 9, ,	Looks	71
PEAK, PEAK	Peaking	77
ND	ND filter	140
, ,	Light metering mode	68
70, 100	Zebra patterns	82
20x	Digital tele-converter	73
	Rolling shutter distortion reduction	140
STBY, REC	HDMI recording command	145
	GPS signal: continuously on - satellite signal acquired; flashing - satellite signal not acquired. • Displayed only when an optional GP-E2 GPS Receiver is connected to the camcorder.	100
Remote	Browser Remote: in white – preparations for connections completed; in yellow – connecting to or disconnecting from the control device.	131
	Exposure bar	58

Icons in the center of the screen

Icon/Display	Description	PDF
OFF	Remote sensor disabled	40
	Onscreen markers	82
	Face detection. When a face is detected, a white frame will appear around the main subject's face.	79
	User-selected tracking frame	79

Icons on the right side of the screen

Icon/Display	Description	PDF
, , , , 000 min	Remaining battery charge The icon shows an estimate of the remaining charge. The remaining recording time is displayed, in minutes, next to the icon. • When is displayed, replace the battery pack with a fully charged one. • Depending on the conditions of use, the actual battery charge may not be indicated accurately.	–
SD	Recording a photo. If an SD card error occurs, SD will appear instead.	43
CFast 0h00m, SD 0h00m	Recording media status and available recording time estimate • The remaining available space is displayed, in minutes, next to the icon. • When the icon appears in red followed by [END], there is no more available space and recording will stop.	–
W T	Zoom indicator	73
50.00P , 50.00i , 25.00P , 24.00P 000Mbps	Frame rate Bit rate	53
MXF	Movie format	–
INPUT OFF	INPUT terminals deactivated	88
LIMIT	Audio peak limiter	90
CH1/1 , CH2/2 , CH1+2/1+2	Audio output channel	120
-dB 40 30 20 10 0 INT_L INT_R M -dB 40 30 20 10 0 INPUT1 INPUT2	Audio recording level	89, 91

Icons on the bottom of the screen

Icon/Display	Description	PDF
[4K], [HD]	Button to open the [4K/HD] submenu and currently selected recording resolution (4K/HD).	53
	When the camcorder's internal temperature has risen to a predetermined level, will appear in yellow. If it continues to rise, will appear in red.	148
FAN	Cooling fan operation	52
MAGN.	Magnification (focus assistance function)	77
x1/4, x1/2 x2, x4, x10, x20, x60, x120, x1200	Button to open the [Slow & Fast Motion] submenu. Currently selected slow motion rate. Currently selected fast motion rate.	96

Icons that appear during mode

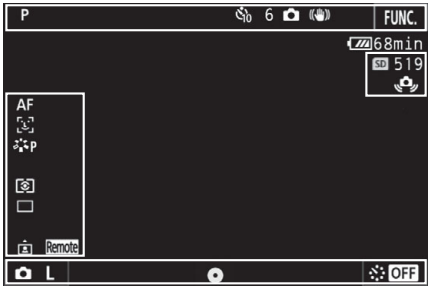

Icons on the top of the screen

Icon/Display	Description	PDF
2, 10, 0,	Self timer	99

Icons on the left side of the screen

Icon/Display	Description	PDF
P, L, N, F, M, Se, Cl, Au, ,	Looks	71
, ,	Light metering mode	68
, ,	Drive mode	44
	Orientation detection	102

Icons on the right side of the screen

Icon/Display	Description	PDF
SD 000	Recording media and available number of photos.	–
	Camcorder shake warning • If this icon appears, we recommend stabilizing the camcorder, for example, by mounting it on a tripod.	–

Icons on the bottom of the screen

Icon/Display	Description	PDF
L, S	Button to open the [Photo Aspect Ratio] submenu and currently selected photo size (L or S).	44
	Indicates whether the focus and/or exposure is locked while the PHOTO button is pressed halfway. • In green – focus and exposure are locked (during auto focus mode); exposure is locked (manual focus mode). • In yellow (flashing) – focus is not locked. If the zoom is operated while the icon is green in autofocus mode, it will start flashing in yellow. • In white (flashing) – the camcorder is attempting to focus on the subject.	–
, OFF, 5sec, 10sec, 30sec, 1min, 10min	Button to open the [Interval Recording] submenu and currently selected interval length.	98

Step 1: Charging the Battery Pack

The camcorder can be powered with a battery pack or directly using the AC adapter. The first time you use the camcorder, charge the battery pack.
For approximate charging times and recording/playback times with a fully charged battery pack, refer to *Recording and Playback Times* (PDF 166).

1 Connect the power cord to the AC adapter.
2 Plug the power cord into a power outlet.
3 Connect the AC adapter to the camcorder's DC IN terminal.

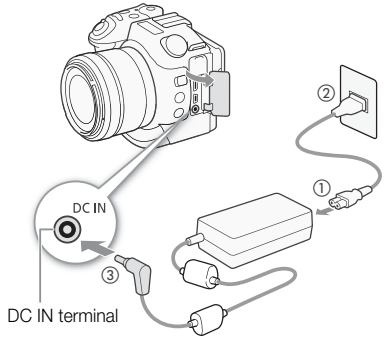

4 Slide the BATT. OPEN switch in the direction of the arrow and open the battery compartment cover.
5 Insert the battery pack all the way into the compartment as shown in the illustration.
   - Push it all the way in until the battery release latch secures it in place.
6 Close the battery compartment cover.
   - Push the cover until you hear a click. Do not force the cover closed if the battery pack is not correctly inserted.

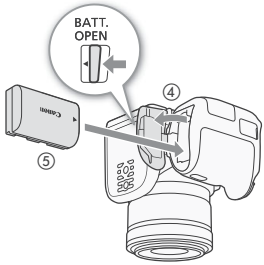

7 Charging will start when the camcorder is turned off.
   - If the camcorder was on, the green POWER/CHG indicator will go out when you turn off the camcorder. After a moment, the POWER/CHG indicator will illuminate in red (battery pack charging). The red POWER/CHG indicator will go out when the battery pack is fully charged.
   - If the indicator flashes, refer to *Troubleshooting* (PDF 146).

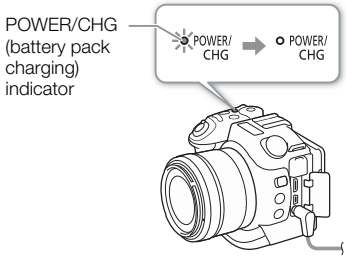

8 Disconnect the AC adapter in the order shown in the illustration.

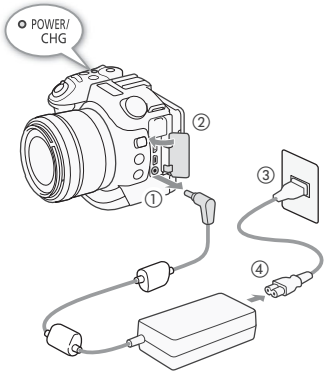

To remove the battery pack

Open the battery compartment cover and slide the battery release latch in the direction of the arrow so the battery pack springs out. Remove the battery pack and close the cover.

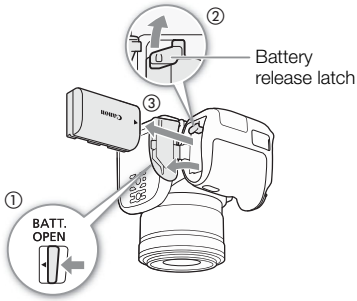

Charging Times

Charging the supplied battery pack will take approximately 4 hours. The following table shows the typical recording and playback times for a fully charged battery pack using the listed frame rate and bit rate. Actual times will vary according to factors such as frame rate, and charging, recording or playback conditions. For more comprehensive information, refer to *Recording and Playback Times* (PDF 166).

Frame rate / Bit rate	Recording (typical)*	Playback
25.00P / 305 Mbps	75 min.	150 min.
50.00P / 50 Mbps	80 min.	185 min.

* Typical recording times measure recording with repeated operations such as start/stop recording and power on/off.

IMPORTANT

- Turn off the camcorder before connecting or disconnecting the AC adapter. After you turn off the camcorder, important data is updated on the recording media. Be sure to wait until the green POWER/CHG indicator goes out.
- When using the AC adapter, do not fix it permanently to one place as this may cause a malfunction.
- Do not connect to the camcorder's DC IN terminal or to the AC adapter any electrical equipment that is not expressly recommended for use with this camcorder.
- To prevent equipment breakdowns and excessive heating, do not connect the supplied AC adapter to voltage converters for overseas travels or special power sources such as those on aircraft and ships, DC-AC inverters, etc.

NOTES

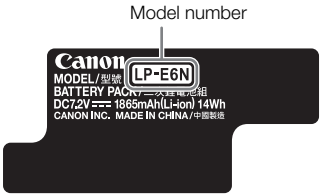

- You cannot charge the optional LP-E6 Battery Pack with the camcorder. Check the bottom label of the battery pack and make sure it is an LP-E6N Battery Pack.
- We recommend charging the battery pack in temperatures between 10 °C and 30 °C. If either the ambient temperature or the battery pack's temperature is outside the range of approx. 0 °C to 40 °C, charging will not start.
- The battery pack will be charged only when the camcorder is off.
- If the power supply was disconnected while charging a battery pack, make sure the POWER/CHG indicator has gone out before restoring the power supply.
- If remaining battery time is an issue, use the AC adapter to power the camcorder from a power outlet so the battery pack will not be consumed.
- Charged battery packs continue to discharge naturally. Therefore, charge them on the day of use, or the day before, to ensure a full charge.
- We recommend that you prepare battery packs to last 2 to 3 times longer than you think you might need.

Step 2: Preparing the Camcorder

Attaching the Lens Hood

Attach the lens hood to protect the lens and reduce the amount of stray light that may hit the lens.

Place the lens hood on the front of the lens so that the hood's lens mount index covers the index on the lens (①) and turn it 90 degrees clockwise until it clicks (②).

- Be careful not to deform the lens hood.
- Make sure that the lens hood is aligned with the thread.

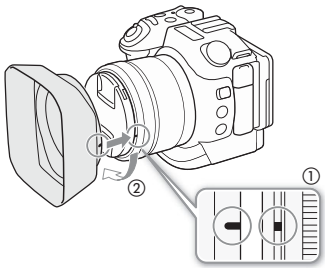

Attaching the MA-400 Microphone Adapter

By attaching the microphone adapter to the camcorder, you can use the INPUT terminals to record audio from commercially available microphones or analog line in sources with an XLR connector. The microphone adapter is powered by the camcorder's power supply.

1 **Attach the supplied cable clamp to the attachment base at the back of the microphone adapter (①) and tighten the lock screw (②).**

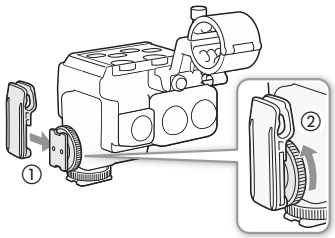

2 **Insert the attachment base at the bottom of the microphone adapter (③) to the camcorder's accessory shoe and tighten the lock screw (④).**

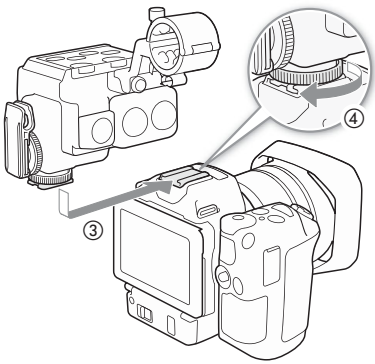

3 Using the supplied unit cable, connect the microphone adapter's AUDIO terminal to the camcorder's AUDIO terminal (⑤).
- Align the ▲ marks on the unit cable's plugs and terminals.
- The unit cable's connectors are interchangeable and either end can be plugged into either terminal.

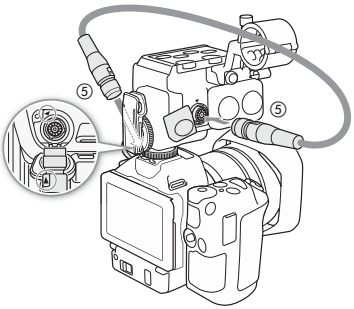

4 Put the unit cable through the cable clamp (⑥).

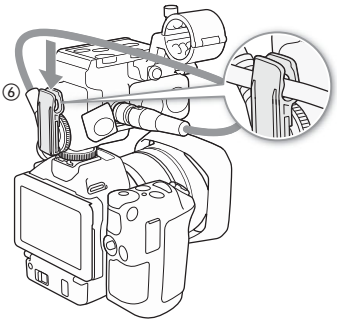

Removing the Microphone Adapter

1 Remove the unit cable from the cable clamp.

2 Disconnect the unit cable from the camcorder's and the microphone adapter's AUDIO terminals (①).
- Pull back the metallic tip of the plug and then disconnect the cable from the terminal.

3 Unscrew the lock screw at the bottom of the microphone adapter (②) and then gently slide out the microphone adapter from the camcorder's accessory shoe (③).

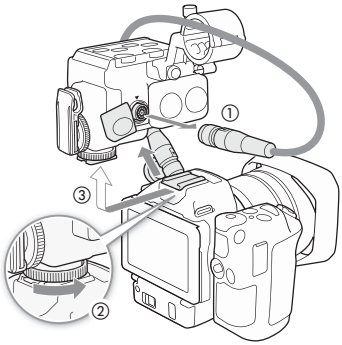

4 Unscrew the lock screw at the back of the microphone adapter (④) and then remove the cable clamp (⑤).

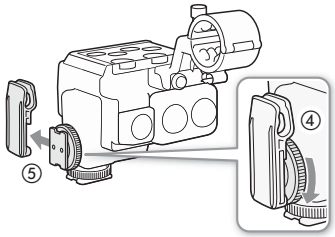

Using the LCD Panel

Pull out the LCD panel and adjust it to a comfortable viewing angle.

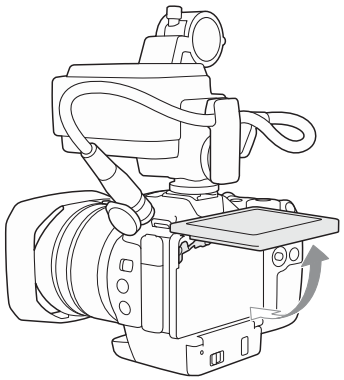

Step 3: Date, Time and Language Settings

Setting the Date and Time

You will need to set the date and time of the camcorder before you can start using it. When the camcorder's clock is not set, the [Date/Time] screen will appear automatically with the day selected.

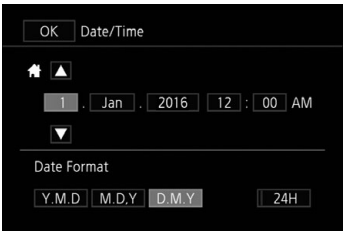

1 Press the ON/OFF button to turn on the camcorder.
- The POWER/CHG indicator will illuminate and the [Date/Time] screen will appear.

2 Touch a field you want to change (year, month, day, hours or minutes).
- You can also push the joystick (◀▶) to move between the fields and then press the joystick to make your selection.

3 Touch [▲] or [▼] to change the field as necessary.
- You can also push the joystick (▲▼) to change the field.

4 Set the correct date and time by changing all the fields in the same way.

5 Touch [Y.M.D], [M.D,Y] or [D.M.Y] to select the date format you prefer.
- You can also push the joystick (◀▶) to move between the fields and then press the joystick to make your selection.
- In some screens, the date will be displayed in short form (numbers instead of month names or only the day and month), but it will still follow the order you selected.

6 Touch [24H] to use 24-hour clock or leave it unselected to use 12-hour clock (AM/PM).
- You can also push the joystick (◀▶) to move between the fields and then press the joystick to make your selection.

7 Touch [OK] to start the clock and close the setup screen.
- You can also push the joystick (◀▶) to move between the fields and then press the joystick to make your selection.

NOTES

- You can adjust the date and time later on with the [System Setup] [1] [Date/Time] setting.
- When you do not use the camcorder for about 3 months, the built-in rechargeable lithium battery may discharge completely and the date and time setting may be lost. In such case, recharge the built-in lithium battery (PDF 157) and set the time zone, date and time again.

Changing the Language

The default language of the camcorder is English. You can set it to one of 27 languages.

1 Press the MENU button.

2 Open the [Language] screen.
[System Setup] [1] [Language]

3 Touch the desired language and then touch [OK].

4 Touch [✕] to close the menu.

NOTES

- Some buttons, such as [FUNC.] and [MENU], will appear in English regardless of the language selected.

Changing the Time Zone

Change the time zone to match your location. The default setting is Paris. In addition, the camcorder is able to retain the date and time of an additional location. This is convenient when you travel so that you can set the camcorder to match the time of your home location or that of your travel destination.

1 Press the MENU button.

2 Open the [Time Zone/DST] screen.
[System Setup] [1] [Time Zone/DST]

3 Touch [⌂] to set the home time zone, or [✈] to set the time zone of your destination when you are traveling.

4 Touch [◀] or [▶] to set the desired time zone. If necessary, touch [☀] to adjust for daylight saving time.

5 Touch [✕] to close the menu.

Step 4: Basic Operation of the Camcorder

Depending on how you plan to shoot, you may need to switch between shooting movies and shooting photos. Before you shoot, you can also select a shooting mode, which can give you the freedom of adjusting the camcorder's camera-related settings or allow you to entrust the settings to the camcorder to varying degrees, depending on the mode. After you finish recording, you can check your recordings by switching the camcorder to playback mode.

Switching Between Movies and Photos

To shoot video clips, set the movie/photo switch to 🎥; to shoot photos, set it to 📷.

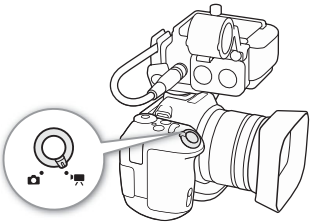

Setting the Shooting Mode

You can select a shooting mode to match your shooting style.

While pressing down the shooting mode dial button, turn the shooting mode dial to the desired mode.

- For details on the various shooting modes, refer to *Shooting Modes* (PDF 55).

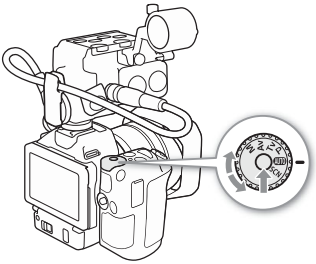

Switching Between Recording and Playback

With a single press of a button, the camcorder can easily switch between recording mode and playback mode. For details, refer to *Playback* (📖 35).

Hold the ▶ button pressed down.

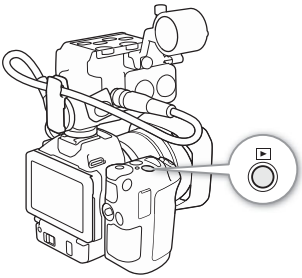

Using the Touch Screen

The buttons and menu items that appear on the touch screen change dynamically depending on the operating mode and the task you are performing. With the intuitive touch screen interface you have all the controls at your fingertips.

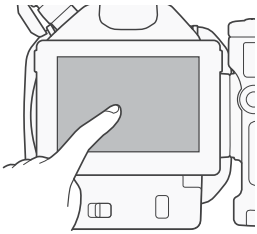

Touch

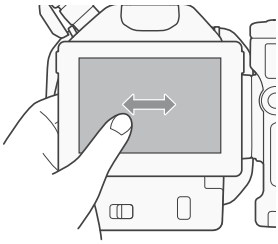

Drag

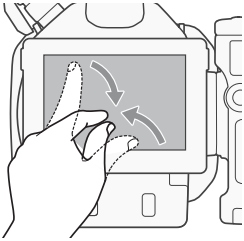

Pinch in

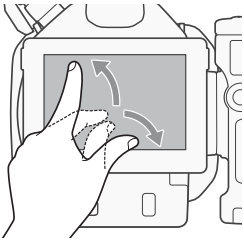

Pinch out

Touch

Press on an element displayed on the touch screen.
Used to start playing back a recording in an index screen, to select a setting from the menus, etc.

Drag

Swipe your finger up and down or left and right across the screen. Used to scroll menus, to browse through index screen pages or to adjust slider controls like the volume.

Pinch In

Place two fingers on the screen and bring them together.
Used when playing back clips and photos. Pinch your fingers in to return to the index screen. Also used during photo playback to zoom out from a photo that has been zoomed in.

Pinch Out

Place two fingers on the screen and move them apart.
Used on an index screen during playback. Pinch your fingers out to start playing back the clip. Also used during photo playback to zoom in on the photo.

IMPORTANT

- The camcorder features a capacitive touch screen. In the following cases, you may not be able to perform touch operations correctly.
  - Using your fingernails or hard-tipped objects, such as ballpoint pens.
  - Operating the touch screen with wet or gloved hands.
  - Applying excessive force or forcefully scratching the touch screen.
  - Attaching commercially available screen protectors or adhesive film onto the touch screen's surface.

Step 5: Preparing Recording Media

The camcorder records 4K clips to CFast cards, and HD clips and photos to SD, SDHC and SDXC memory cards. Initialize recording media (PDF 38) when you use them with this camcorder for the first time. In the case of SD cards, initialize using the [Complete Initialization] option. See *Compatible Recording Media* (PDF 35) for recording media you can use.

Inserting a CFast Card

1 Turn off the camcorder.
- Wait until the ACCESS indicator is off.

2 Slide the CARD OPEN switch in the direction of the arrow and open the recording media slot cover.

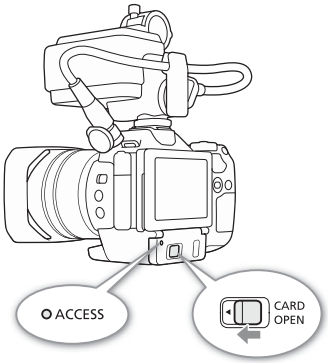

3 Insert the CFast card straight, with the label facing up all the way into the slot ①.
- Make sure that you insert the CFast card into the slot so that the connectors in the card match the orientation shown on the illustration to the left of the CFast card slot.

4 Close the recording media slot cover ②.
- Do not force the cover closed if the CFast card is not correctly inserted.

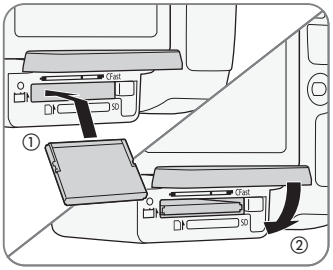

ACCESS indicator	Recording media status
On or flashing	Accessing the recording media.
Off	A recording media is not inserted or it is not being accessed.

IMPORTANT
- Turn off the camcorder before inserting or removing recording media. Inserting or removing the recording media with the camcorder on may result in permanent data loss.
- CFast cards have front and back sides that are not interchangeable. Inserting a CFast card facing the wrong direction can cause a malfunction of the camcorder. Be sure to insert the CFast card as described in the procedure above.

Removing a CFast card

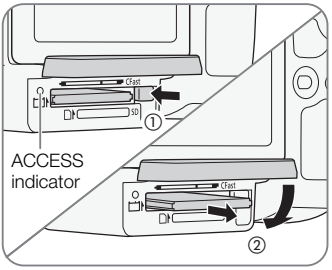

1 Turn off the camcorder.
- Wait until the ACCESS indicator is off.

2 Slide the CARD OPEN switch in the direction of the arrow and open the recording media slot cover ①.

3 Push in the CFast card release button to release the CFast card.

4 Pull the CFast card all the way out and close the recording media slot cover ②.

Inserting and Removing an SD Card

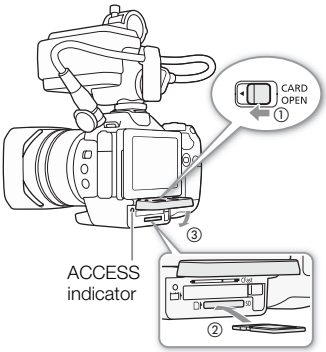

1 Turn off the camcorder.
- Wait until the ACCESS indicator is off.

2 Slide the CARD OPEN switch in the direction of the arrow and open the recording media slot cover ①.

3 Insert the SD card, with the label facing up, all the way into the SD card slot until it clicks ②.
- To remove the SD card, push the SD card once to release it. When the SD card springs out, pull it all the way out.

4 Close the recording media slot cover ③.
- Do not force the cover closed if the SD card is not correctly inserted.

ACCESS indicator	Recording media status
On or flashing	Accessing the recording media.
Off	A recording media is not inserted or it is not being accessed.

IMPORTANT

- Turn off the camcorder before inserting or removing recording media. Inserting or removing the recording media with the camcorder on may result in permanent data loss.
- SD cards have front and back sides that are not interchangeable. Inserting an SD card facing the wrong direction can cause a malfunction of the camcorder. Be sure to insert the SD card as described in the procedure above.

NOTES

- SD cards have a physical switch to prevent writing on the card so as to avoid the accidental erasure of the card's content. To write-protect the SD card, set the switch to the LOCK position.

Recording Video and Taking Photos

Preparing to Record

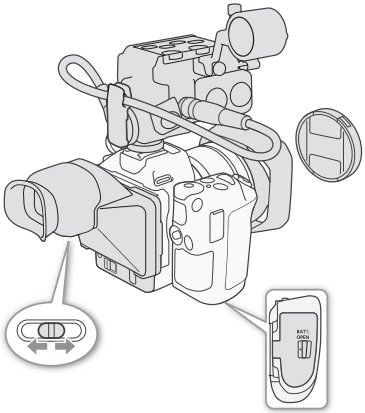

1 Remove the lens cap.

2 Attach the lens hood and, if necessary, attach the viewfinder unit (PDF 22) and MA-400 Microphone Adapter (📖 21).

3 Insert a charged battery pack into the camcorder (📖 18).

4 Insert recording media as necessary (📖 29, 30).
- Insert a CFast card to record 4K clips; insert an SD card to record HD clips and photos.

5 Attach and adjust the viewfinder unit, if necessary (PDF 23).

Recording

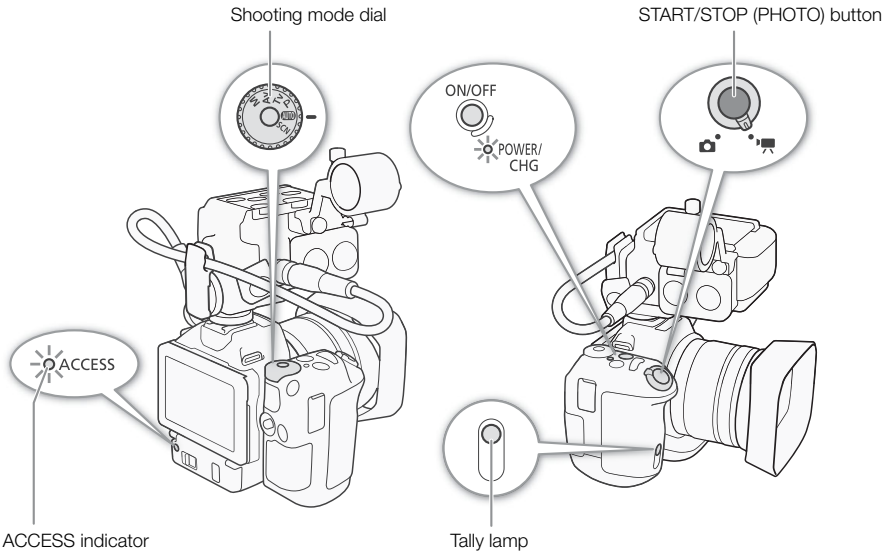

1 Set the movie/photo switch to 🎥 to record clips or 📷 to take photos.

2 Set the shooting mode dial to the desired shooting mode.

3 Press the ON/OFF button to turn on the camcorder.

- The POWER/CHG indicator will illuminate in green.

To shoot clips

4 Press the START/STOP button.

- Recording starts. The tally lamp illuminates and the ■ icon at the top of the screen changes to ●.
- The ACCESS indicator flashes in red intermittently as the camcorder records to the recording media.
- You can also take a photo while recording a clip (PDF 43).
- You can select the size of recorded photos (PDF 44).

5 Press the START/STOP button to stop the recording.

- The clip is recorded on the recording media and the camcorder enters record standby mode. The tally lamp will also go out.

6 Press and hold the ON/OFF button until the POWER/CHG indicator goes out.

- Make sure the ACCESS indicator has also gone out.

To take photos

4 Press the PHOTO button halfway.

- **When the FOCUS switch is set to A (autofocus):** If the subject is not in focus, ◉ will flash in yellow. Once the focus is automatically adjusted, ◉ will turn green and one or more AF (autofocus) frames will appear. You can also change the autofocus method (PDF 74).

5 Press the PHOTO button fully.

- The ACCESS indicator flashes in red intermittently as the camcorder records to the recording media.

6 Press and hold the ON/OFF button until the POWER/CHG indicator goes out.

- Make sure the ACCESS indicator has also gone out.

Selecting the Resolution (Recording in 4K or HD)

This camcorder allows you to record clips in 4K or HD. The resolution (frame size) of 4K clips is 3840x2160 while that of HD clips is 1920x1080. Note that 4K clips are saved to the CFast card and HD clips are saved to the SD card.

1 Touch [4K] or [HD] on the bottom left of the screen.

- The icon will show the currently selected option.
- Alternatively, you can press the MENU button and select [Recording Setup] ❯ [1] ❯ [4K / HD].

2 Select the desired option and then touch [↩] or [✕].

Selecting the Frame Rate and Bit Rate

Follow the procedure below to select the frame rate and bit rate. Choose the combination of frame rate and bit rate that best suits your needs.

1 Press the MENU button.

2 Open the [4K Recording] or [HD Recording] submenu.

[Recording Setup] ❯ [1] ❯ [4K Recording] or [HD Recording]

3 Select the desired frame rate and bit rate option and then touch [✕].

- Icons of the currently selected option will appear on the right side of the screen.

NOTES

- You have the option to change the system frequency (PDF 53).

Playback

Playing Back Recordings

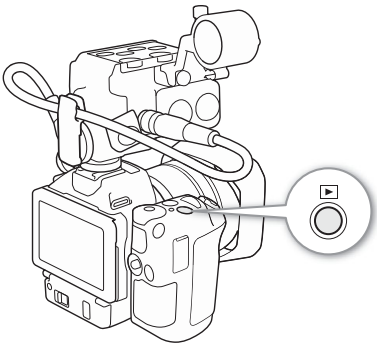

1 While the camcorder is turned off, hold the [▶] button pressed down.
- The camcorder will turn on and an index screen will appear.
- If you hold the button pressed down again, the camcorder will switch to [🎥] or [📷] mode, depending on the position of the movie/photo switch.

2 Touch the thumbnail of the desired recording to start playback.
- You can also use the joystick to select a recording.
- During playback, you can touch the screen or press the DISP. button to display the playback controls. You can use the touch panel or joystick to operate the playback controls.

Playing back clips

- Playback will start from the selected clip until the end of the last clip in the index screen.
- From the playback controls, touch [❚❚] to pause playback or touch [■] to stop playback and return to the index screen.

Playing back photos

- After the photo appears, drag your finger left/right to browse through the photos one by one.
- You can also use the joystick to browse through the photos.
- From the playback controls, touch [▦] to return to the index screen.

ⓘ NOTES

- You may notice brief stops in video or audio playback between clips.

Using the Playback Index Screens

Clips and photos are sorted into different index screens depending on the type of recording. The [4K] index screen contains 4K clips, the [HD] index screen contains HD clips and the [] index screen contains photos. You can easily switch between index screens.

1 Touch the index screen button on the upper left of the screen.

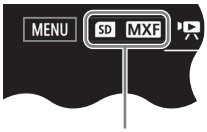

Index screen button

2 Select the desired index screen.
- The index screen of the current recording type will appear.
- will appear for clips recorded using the [9 Highlight Priority] look (PDF 71).

3 Touch the thumbnail of the desired recording to start playback.

Deleting Recordings

Deleting a Clip During Playback Pause

1 Play back the clip you want to delete.

2 Touch the screen to display the playback controls.

3 Delete the clip.
[] [] [Yes]
- The clip is deleted.

4 Touch [OK].

Deleting a Photo during Playback

1 Play back the photo you want to delete.

2 Touch the screen to display the playback controls.

3 Delete the photo.

[🗑] ➤ [🗑 Proceed] ➤ [Yes]

- The photo is deleted and the next photo is displayed. You can drag your finger left/right select another photo to delete and then touch [🗑 Proceed] again.

4 Touch [✕].

5 In the playback controls, touch [▦].

IMPORTANT

- Be careful when deleting recordings. Once deleted, they cannot be recovered.
- Save copies of important recordings before deleting them (PDF 122).

Connecting to an External Monitor

When you connect the camcorder to an external monitor for recording or playback, connect the camcorder's HDMI™ OUT terminal to the monitor's HDMI input terminal using the supplied HTC-100/S High Speed HDMI Cable.

Connection Diagram

We recommend that you power the camcorder from a power outlet using the AC adapter.

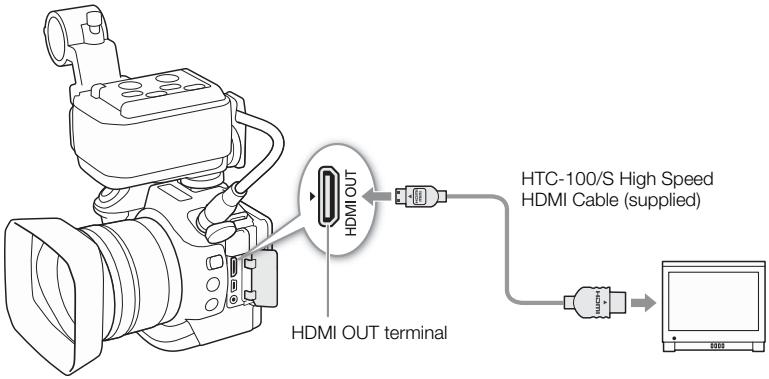

NOTES

- The HDMI OUT terminal is for output only. Do not connect the camcorder to another device's output terminal using the HDMI OUT terminal as this will cause a malfunction.
- When using a commercially available HDMI cable, make sure the HDMI cable is Type A to Type C.
- Audio and video will not be output from the HDMI OUT terminal while Wi-Fi functions are in use.
- Correct operation cannot be guaranteed when connecting the camcorder to DVI monitors.
- Video may not be output correctly depending on the monitor.
- When [Camera Setup] [3] [Rolling Shutter Reduction] is set to [ON On] and recording starts, HDMI output will stop.

Saving Clips to a Computer

Use Canon XF Utility to save clips or one of the Canon XF plugins* to import clips into non-linear editing (NLE) software. When using the software to transfer clips to a computer, make sure to use a compatible card reader. For the latest information on compatibility with commercially available non-linear (NLE) software, visit your local Canon Web site. Canon XF Utility and the Canon XF plugins are available as a free download from the following Canon Web site.

www.canon.com/icpd

To download, click on your country/region and follow the onscreen instructions.

* Plugins are available for NLE software by Avid and Apple.

Canon XF Utility: Browser for transferring clips to a computer and playing back, checking and managing clips. The software also allows you to capture photos from clips.

Plugins for non-linear editing (NLE) software: The plugins allow you to transfer clips from a computer or the recording media (connected via USB reader to a computer) to the NLE software. The following plugins are available.

- Canon XF Plugin for Avid Media Access (Windows or Mac OS)
- Canon XF Plugin for Final Cut Pro X (Mac OS)

Overview of Wi-Fi Functions

This camcorder's Wi-Fi functions use either an infrastructure or camera access point connection, depending on the function. Refer to the following table for a brief summary of the Wi-Fi functions.

Wi-Fi functions and connection types

Function	Description	Wi-Fi connection		PDF
		Infrastructure[1]	Camera Access Point[2]	
Browser Remote	Control the camcorder remotely from the Web browser of a connected device.	–	●	131
Playback via Browser	Access the photos on the SD card in the camcorder from the Web browser of a connected device to play back or save locally.	–	●	135
Media Server	Wirelessly view on a computer the photos on the camcorder's SD card.	●	–	136

[1] Connection to a Wi-Fi network via an external access point (wireless router, etc.)
[2] Direct connection to one Wi-Fi-enabled device where the camcorder serves as the Wi-Fi access point.

Abridged Specifications

The specifications given here are **an abridged version** of the full specifications of the camcorder. Be sure to read the full version of the instruction manual for the complete information. See *Specifications* (PDF 161) for details.

- Power Supply (rated): 7.2 V DC (battery pack), 8.4 V DC (DC IN)
- Power Consumption (screen at normal brightness)
  When shooting 4K clips (305 Mbps, 25.00P): 6.0 W
  When shooting HD clips (50 Mbps, 50.00P): 5.5 W

Optional Accessories

Canon offers a wide range of optional accessories for your camcorder.
See *Optional Accessories* (PDF 159) for details.

Use of genuine Canon accessories is recommended.
The message [Battery communication error] is displayed if you use a non-genuine Canon battery pack, and user response is required. Note that Canon shall not be liable for any damages resulting from accidents, such as malfunction or fire, that occur due to use of non-genuine Canon battery packs.

This mark identifies genuine Canon video accessories. When you use Canon video equipment, we recommend Canon-brand accessories or products bearing the same mark.

The information in this manual is verified as of February 2017. Subject to change without notice.

Canon Inc. 30-2, Shimomaruko 3-chome, Ohta-ku, Tokyo 146-8501, Japan
Canon Europa N.V. Bovenkerkerweg 59, 1185 XB Amstelveen, The Netherlands http://www.canon-europe.com

ASIA and HONG KONG, S.A.R.
Canon Hongkong Company Ltd
19/F, The Metropolis Tower, 10 Metropolis Drive,
Hunghom, Kowloon, Hong Kong
+852 3191 2333, +852 2428 3963

AUSTRALIA http://www.canon.com.au
Canon Australia Pty Ltd
13-13-83 (within Australia only)
(61) 02-9805-2555

CENTRO Y SURAMÉRICA http://www.cla.canon.com
CANON LATIN AMERICA, INC.

NEW ZEALAND http://www.canon.co.nz
Canon New Zealand Ltd
0800-222-666 (within New Zealand only)
(64) 09-489-0300

SINGAPORE
Canon Singapore Pte. Ltd
1 Fusionopolis Place, #15-10 Galaxis,
Singapore 138522
(65) 6799 8888, (65) 6799 8882

UNITED KINGDOM
Canon UK Ltd
Unit 160, Centennial Park, Centennial Avenue,
Elstree, Hertfordshire, WD6 3SG
020-7660-0186

Visit your local Canon Web site to download the latest version of the full-version Instruction Manual (PDF file).

DIE0489001

0202W491
© CANON INC. 2017
PUB. DIE-0489-001A