Canon

Exif Print BUBBLE JET DIRECT PictBridge

PIXMA MP800

User's Guide

ENG QT5-0044-V08

Getting Help from Canon

Help Us Help You Better

Before you contact Canon, please record the following information.

Serial Number (located inside the machine): _____

Model Number (located on the front of the machine): _____

Machine Driver CD-ROM number (located on the CD-ROM): _____

Purchase Date:_____

Customer Technical Support Sequence*

1. **Internet — www.canontechsupport.com**
   For quick and comprehensive self-help in an intuitively guided interactive troubleshooting environment, the place to start is our helpful tech support web site. In addition, the latest driver downloads, answers to frequently asked questions, product information, and "where to buy" instructions are found here.

2. **Email Tech Support — www.canontechsupport.com**
   For individual attention to a special issue, try emailing our friendly technical engineers, specially trained to communicate quick, easy, and logical solutions to your inquiries within 24 hours.

3. **Toll-Free Live Tech Support — (1-800-828-4040)**
   This option provides live telephone technical support, free of service charges, Monday-Saturday (excluding holidays), during your product's 1 year limited warranty period. Telephone Device for the Deaf (TDD) support is available at **(1-866-251-3752)**.

4. **Extended Service and Support — www.canonesp.com**
   Canon CarePAK Extended Service Plan is a cost-attractive and easy-to-use extended service program that provides up to three full years of service and support coverage at a very attractive price. CarePAK offers toll-free Canon technical support and includes Canon's superb InstantExchange product replacement program. For further information about extending your Canon service and support, call (1-800-385-2155), or visit our Web site at **www.canonesp.com**. CarePAK must be purchased during your product's warranty period.

   For more information and updated program specifics, please visit our web site at **www.canontechsupport.com**.

* Support program specifics are subject to change without notice.

Table of Contents

Copyright 3
Disclaimer 3
Model Name 3
Trademarks 4
How to Use the Documentation Provided 4
Safety Precautions 5
Reading the Document 10
Symbols Used in This Guide 10
Legal Limitations on Use of Your Product and Use of Images 11

1 Before Printing 12
Main Components and Their Functions 12
Turning the Machine ON and OFF 17
Loading Documents to Copy or Scan 18
Loading Paper 19
Changing the Print Settings 33

2 Copying 37
Making Copies 37
Changing the Copy Settings 39
Using Useful Copy Functions 39

3 Printing from a Memory Card 44
Using the Memory Card 44
Printing Photograph 47
Other Useful Functions 50

4 Photo Printing from Photo or Film 60
Scanning a Photo 60
Scanning a Film 62
Printing Photographs 66
Other Useful Functions 68

5 Printing Photographs Directly from a Compliant Device 70
Connecting to a PictBridge Compliant Device 70
Printing Photographs Directly from a PictBridge Compliant Device 72
Printing Photographs Directly from a Canon Bubble Jet Direct Compatible Digital Camera 75

6 Printing Photographs from a Wireless Communication Device 77
Setting the Page Size, Media Type, and Layout When Printing from a Mobile Phone 77
Performing Infrared Communication 78
Performing Bluetooth Communication 80

7 Printing from Your Computer 82
Windows
Printing with Windows 82
Macintosh
Printing with Macintosh 84

8 Scanning Images 87
About Scanning Images 87
Scanning Methods 87

9 Reading from and Writing to a Memory Card 90
Setting up the Card Slot as the Memory Card Drive of the Computer 90

10 Changing the Machine Settings 91
The Print Settings 92
Wireless Print Settings 93
Bluetooth Settings 93
Other Settings 93
Language selection 94
Reset setting 94
Save settings 94
Load settings 94

11 Routine Maintenance 95
Replacing an Ink Tank 95
Getting the Ink Level Information 95
Knowing When to Replace Ink Tank 96
Replacing Ink Tanks 96
Keeping the Best Printing Results 100
When Printing Becomes Faint or Colors are Incorrect 101
Cleaning Your Machine 107

12 Troubleshooting 111
An Error Message is Displayed on the LCD 113
Cannot See the Display Properly on the LCD/Cannot See the Display on the LCD 115
Cannot Scan Films 116
Ink Does Not Come Out/Printing is Blurred/Colors are Wrong/White Streaks/Straight Lines are Misaligned/Cannot Print to End of Job 117
Back of Paper is Smudged/Paper Does Not Feed Properly/Printed Surface is Scratched 121
Paper Jams 125
Cannot Print Properly from a Photo Index Sheet 128
Cannot Print Properly from the Digital Camera 128
Cannot Print Properly through Wireless Communication 130
Cannot Install the MP Drivers 131
Cannot Connect to the Computer Properly 133

Problems Scanning.....133
Cannot Scan Films 138
An Error Message Appears on the Screen 139
If You Cannot Resolve the Problem 143

13 Appendix.....144
Printing Area.....144
How to Read the On-screen Manuals.....145
Uninstalling the On-screen Manuals.....146
Transporting Machine.....147
Specifications.....147
Users in the U.S.A. 151
FCC Notice 151
Mercury Legislation.....151
Canon U.S.A., Inc. Limited Warranty - U.S. Only 152
Users in Canada.....155
Customer Technical Supports 155

Index 156

Copyright

This manual is copyrighted by Canon Inc. with all rights reserved.

Under the copyright laws, this manual may not be reproduced in any form, in whole or in part, without the prior written consent of Canon Inc.

© 2005 Canon Inc.

Disclaimer

Canon Inc. has reviewed this manual thoroughly in order that it will be an easy-to-use guide to your Canon MP800 Series. All statements, technical information and recommendations in this manual and in any guides or related documents are believed reliable, but the accuracy and completeness thereof are not guaranteed or warranted, and they are not intended to be, nor should they be understood to be, representation or warranties concerning the products described.

Specifications are subject to change without notice.

As an ENERGY STAR partner, Canon Inc., has determined that this product meets the ENERGY STAR guidelines for energy efficiency.

All information regarding non-Canon products was compiled from publicly available information. No representation is made regarding the accuracy thereof.

This machine supports Exif 2.2 (also called "Exif Print").

Exif Print is a standard for enhancing the communication between digital cameras and printers.

By connecting to an Exif Print-compliant digital camera, the camera's image data at the time of shooting is used and optimized, yielding extremely high quality prints.

Model Name

K10265 (PIXMA MP800)

Trademarks

- "Windows" and "Internet Explorer" are trademarks of Microsoft Corporation, registered in the United States and other countries.
- "Macintosh" and "Mac" are trademarks of Apple Computer, Inc., registered in the U.S. and other countries.
- "SmartMedia" is a trademark of Toshiba Corporation.
- "MEMORY STICK", "Memory Stick PRO", "MEMORY STICK Duo" and "Memory Stick Pro Duo" are trademarks of Sony Corporation.
- "xD-Picture Card" is a trademark of Fuji Photo Film Co., Ltd.
- "MultiMediaCard" is a trademark of Infineon Technologies AG.
- "SD Secure Digital memory card" and "miniSD Card" are trademarks of SD Association.
- "IrDA Feature Trademark" is owned by the Infrared Data Association and used under license therefrom.
- "Bluetooth" is a trademark of Bluetooth SIG, Inc.,U.S.A. and are licensed to Canon Inc.
- Specifications are subject to change without notice.

How to Use the Documentation Provided

Easy Setup Instructions
(Printed documentation)

Be sure to read this sheet first.
This sheet includes instructions for setting up your machine and getting it ready for use.

User's Guide
(This guide)

Read this guide when starting to use the machine.
After following instructions in the *Easy Setup Instructions*, read this guide for instructions on printing from your computer, direct photo printing from selected digital cameras, copying, and scanning.

On-screen Manuals

Refer to these guides as needed for full instructions on some of the more advanced features.

Printer Driver Guide
Refer to this guide for full instructions on setting the printer driver.

Scan Guide
Refer to this guide for full instructions on scanning operation and settings.

Photo Application Guide
Refer to this guide for instructions on using various application software included on the Setup CD-ROM.

Bluetooth User's Guide
Refer to this guide for full instructions on printing from computers and devices that support Bluetooth communication, and on troubleshooting them.

Safety Precautions

Please read the safety warnings and cautions provided in this guide to ensure that you use your machine safely. Do not attempt to use the machine in any way not described in this guide.

Warning You may cause an electric shock/fire or damage the machine if you ignore any of these safety precautions.

Location	**Do not place the machine close to flammable solvents such as alcohol or thinners. If flammable substances come into contact with electrical parts inside the machine, it may result in fire or electrical shock.**
Power supply	**Never attempt to plug or unplug the machine from the power supply when your hands are wet. This may result in electrical shock.**
	Always push the plug all the way into the power outlet. If the prongs of the power plug come into contact with metal objects, it may result in fire or electrical shock.
	Never damage, modify, stretch or excessively bend or twist the power cord. Do not place heavy objects on the power cord. These actions may cause electrical damage and result in fire or electrical shock.
	Never plug the machine into a power socket that is shared with other equipment (extension lead/cord, 2- or 3-way adapter, etc.). This may result in fire or electrical shock.
	Plug the machine into a standard 110-120 V AC, 50/60 Hz or 200-240 V AC, 50/60 Hz, (depending on your local electrical requirements), two-prong* grounded outlet. Operate the machine only from the type of power source indicated on the machine's label or a fire, electrical shock, or malfunction may occur. If you are unsure of the type of power available, consult your local power company. *** The shape of the plug and outlet may vary depending on the country of purchase.**
	Do not allow the power cord to be near objects that emit heat. The outer cover of the power cord may melt resulting in fire or electrical shock.
	Never use the machine if the power cord is bundled or knotted. Knots in the cord may result in fire or electrical shock.
	If you detect smoke, unusual smells or strange noises around the machine, immediately unplug the machine at the power supply and contact the Canon Customer Care Center. **Using the machine in such conditions may result in fire or electrical shock.**
	Periodically, unplug the machine and use a dry cloth to wipe off any dust or dirt collected on the plug and the power outlet. **If the machine is placed at a location exposed to a lot of dust, smoke, or high humidity, the dust collected on the plug absorbs moisture and may cause insulation failure and fire.**
Maintenance	**Do not service the machine yourself except as specifically described in this guide. If further servicing is required, contact the Canon Customer Care Center.**
	When storing the machine, choose a location where the machine is not exposed to dust. Dust accumulation may prevent the machine from operating properly.
	Use a damp cloth to clean the machine. Never use flammable solvents such as alcohol, benzene or thinners. If flammable solvents come in contact with electrical components inside the machine, it could cause a fire or electrical shock.
	Always turn OFF the power and unplug the machine from the power outlet before cleaning the machine. **If you leave on or accidentally switch the machine ON while cleaning it, it may result in injury or damage the machine.**

Handling	**Do not attempt to disassemble or modify the machine. There are no user serviceable parts inside the machine.** **The machine contains high-voltage components. Never attempt any maintenance procedure not described in this guide. Incorrect maintenance procedures may damage the machine, or cause a fire or electrical shock.**
	Do not drop paper clips, staples, or other metal objects inside the machine. Also do not spill water, liquid, or flammable substances inside the machine. If these items come into contact with high-voltage parts inside the machine, it may result in fire or electrical shock. If these items are dropped or spilled in the machine, turn OFF the power and unplug the power cord immediately with dry hands. Then contact the Canon Customer Care Center.
	Do not use flammable sprays near the machine. **This could cause a fire or electrical shock if the spray comes into contact with electrical components inside the machine.**
	There are high-voltage components inside the machine. If you are looking inside the machine to clear paper jams etc., do not allow metal objects such as jewelry to come into contact with the inside of the machine. Contact may result in burns or electrical shock.
Others	**This product emits low level magnetic flux. If you use a cardiac pacemaker and feel abnormalities, please move away from this product and consult your doctor.**
	When setting the machine near electric products with fluorescent lighting, separate the machine at least 5.9 inches (15 cm) from electric products equipped with fluorescent lighting. If you place it near to them, the machine may malfunction as a result of the noise emitted by the fluorescent lighting.
	When turning OFF the power, be sure to press [ON/OFF] and confirm that the Alarm Lamp has shut off. If you pull the power plug out of the wall outlet while the Alarm Lamp is lit or flashing, the Print Head is not protected, and you may not be able to print later.

Caution You may cause injury or damage the machine if you ignore any of these safety precautions.

Location	**Do not block or cover the ventilation port or any openings on the machine with objects, as it may cause the inside of machine to overheat and cause a fire.**
	Place the machine on a flat, stable, vibration-free surface that is strong enough to support its weight. If the machine topples over, it may result in injury. (For the weight of the machine, see "Appendix" on page 144.)
	Do not use or store the machine outdoors.
	Do not install the machine near devices that contain magnets or generate magnetic fields, such as speakers.
	To ensure proper ventilation, make sure the machine is approximately 4 inches (10 cm) away from walls and other equipment.
	Do not install the machine in a location that is very humid or dusty, in direct sunlight, outdoors, or close to a heating source. **Installing in such a location may result in fire or electrical shock.** **To avoid the risk of fire or electrical shocks, install the machine in a location with an ambient temperature range of 41°F to 95°F (5°C to 35°C) and humidity of 10% to 90% (condensation free).**
	Do not place the machine on a thick rug or carpet. **If fibers or dust come inside the machine, it could cause a fire.**

Power supply	**Never remove the plug by pulling on the cord.** **Pulling on the power cord may damage the cord and cause a fire or electrical shock.**
	When turning OFF the power, be sure to press [ON/OFF] or unplug the machine. **However, if the machine is unplugged during printing, the Print Head is not protected with the cap that prevents the ink from drying. This may affect the print quality of the machine when printing later.**
	During electrical storms, turn OFF the power and disconnect the power cord from the power outlet.
	Do not use an extension cord as this may result in fire or electrical shock.
	Ensure that the area around the power outlet is kept clear at all times so you can easily unplug the power cord if necessary. Otherwise you will be unable to disconnect the power plug in case of an emergency, and it may result in fire or electrical shock.
	Never use a power supply source other than the one rated for the machine in the country where you purchased the machine as it may result in fire or electrical shock. **The operating requirement of this machine is as follows:** **110-120 V AC, 50/60 Hz or 200-240 V AC, 50/60 Hz (depending on local electrical requirements)**
	Do not plug the machine into the same circuit as appliances such as an air conditioner, television, or copier. These devices generate electrical noise which may interfere with your machine's operation.
	Whenever you turn OFF the power and unplug the machine, wait at least five seconds before you plug it in again.
	Use only the power cord that came with the machine. Using a different power cord may cause electric leakage or damage to the machine.
	Turn OFF the power and unplug the machine in the following conditions: ● **When the power cord or plug is damaged or frayed.** ● **If liquid has spilled into the machine.** ● **If the machine has been exposed to rain or water.** ● **If the machine does not operate normally when you have followed the instructions in the guides included with your machine.** ● **If the machine does not operate normally when you have followed the instructions provided in "Troubleshooting" on page 111.** ● **If the machine has been dropped or damaged.** ● **If the machine exhibits a distinct change in performance, indicating a need for servicing.**
	Turn OFF the power and disconnect the power cord if the machine will not be used for a long period such as during holidays.
	The socket-outlet shall be installed near the equipment and shall be easily accessible.

Handling	**Close the Document Cover gently to avoid catching your hand. Failing to do so may result in personal injury.** 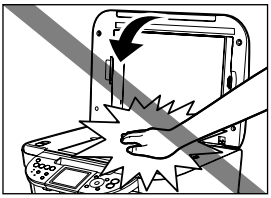
	Do not press down hard on the Document Cover when using the Platen Glass to scan thick books. This may damage the Platen Glass and Document Cover and/or result in personal injury. 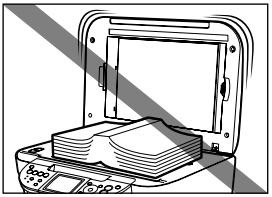
	Do not place the following objects on top of the machine. If such objects come into contact with internal electrical components, the machine may short-circuit, resulting in fire or electrical shock. ● **Metal objects such as jewelry and watches** ● **Containers of water or other liquids such as glasses, vases, or pot plants** **If water does spill inside the machine, turn OFF the power immediately by pressing [ON/OFF], and disconnect the power cord. Then, contact the Canon Customer Care Center.**
	Do not touch the high-voltage electrical parts as this may result in electrical shock.
	Do not place heavy objects on top of the machine as these may topple over and result in injury.
	When removing paper jammed in the machine, be careful not to get ink on your hands or clothing. If ink gets on your hands or clothing, wash them soon in running water. If you use hot water, the ink may adhere and become difficult to remove.
	After printing, do not touch the electrical contacts of the Print Head. They will be hot and may result in burns or electrical shock.
	Do not subject the machine to strong physical shock or vibration. This can damage the machine's components.
	Before moving the machine, turn OFF the power and unplug the machine.
	When moving the machine, carry the machine at both ends. 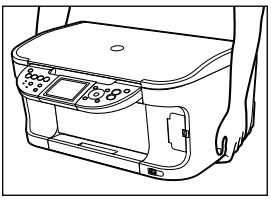
	A distinct change in performance may indicate a need for servicing.
	Do not insert your hands into the machine while it is printing. **Parts inside the machine are moving and this may result in injury.**
	Do not turn the machine upside down. **Ink may leak out and stain clothing or the surrounding area.**
	Adjust only those controls that are covered by the instructions in the guides since improper adjustment of other controls may result in damage and require extensive repair by a qualified technician to restore the product to normal operation.
	When storing or transporting the machine, do not tilt it, stand it on its side, or turn it upside down. Doing so may cause ink to leak out.

Print Head/Ink tanks	**For safety reasons, store print heads and ink tanks out of the reach of small children. If a child ingests any ink, consult a doctor immediately.**
	Do not shake print heads or ink tanks. Ink may leak out and stain clothing or the surrounding area.
	Never touch the Print Head.

Reading the Document

Symbols Used in This Guide

Please read the list below of symbols used in this guide. The following symbols are used to indicate important instructions. Be sure to obey these instructions.

Warning	Indicates a warning concerning operations that may lead to death or injury to persons if not performed correctly. In order to use the machine safely, always pay attention to these warnings.
Caution	Indicates a caution concerning operations that may lead to injury to persons or damage to property if not performed correctly. In order to use the machine safely, always pay attention to these cautions.
Important	Indicates operational warnings and restrictions. Be certain to read these items to operate the machine correctly and to avoid damage to the machine.
Note	Indicates notes for operation or additional explanations. Reading these is highly recommended.
Windows	Read this when the machine is connected to a Windows® system.
Macintosh	Read this when the machine is connected to a Macintosh® system.

Legal Limitations on Use of Your Product and Use of Images

It may be unlawful to make copies of, scan, print or use reproductions of the following documents. The list provided is non-exhaustive. When in doubt, check with a legal representative in your jurisdiction.

- Paper money
- Money orders
- Certificates of deposit
- Postage stamps (canceled or uncanceled)
- Identifying badges or insignias
- Selective service or draft papers
- Checks or drafts issued by governmental agencies
- Motor vehicle licenses and certificates of title
- Traveler's checks
- Food stamps
- Passports
- Immigration papers
- Internal revenue stamps (canceled or uncanceled)
- Bonds or other certificates of indebtedness
- Stock certificates
- Copyrighted works/works of art without permission of copyright owner

Chapter 1

Before Printing

Main Components and Their Functions

■ Front View

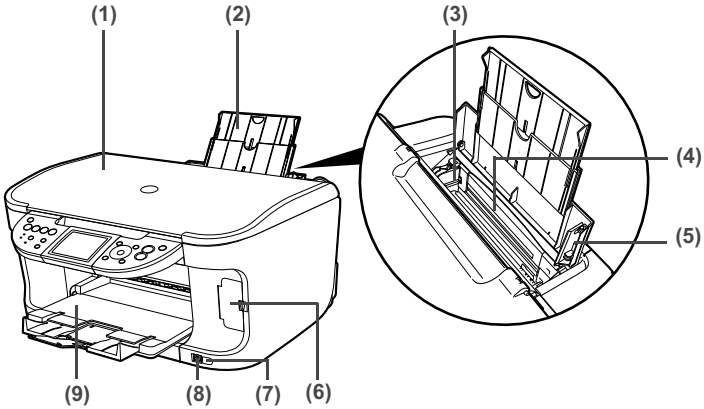

(1) Document Cover
Open this cover when loading a document on the Platen Glass.

(2) Paper Support
Supports paper loaded on the tray. Extend it before loading paper by putting your finger in the rounded indent and pulling out the extension until it stops.

(3) Paper Guide
When loading paper, ensure that the left edge just touches this guide.

To move the Paper Guide, pinch the knob and slide in the appropriate direction.

(4) Auto Sheet Feeder
Load paper here before printing. Paper feeds automatically, one sheet at a time.

(5) Cover Guide
Align the right side of the paper to this guide.

(6) Card Slot Cover
Open to insert a memory card. For details, see "Inserting the Memory Card" on page 45.

(7) IrDA Port
Receives photo data sent from the mobile phone through infrared communication.
See "Performing Infrared Communication" on page 78.

(8) Direct Print Port
Used when printing directly from a digital camera or a digital video camcorder or a mobile phone equipped with a camera compatible with the machine.

When using optional Bluetooth Unit*, connect it to this port. Refer to the *Bluetooth User's Guide*.

*The Bluetooth Unit is not available to some regions due to the law of the countries or the regulations. For details, contact the Canon Customer Care Center.

(9) Paper Output Tray
Open this tray before copying or printing by pressing the Open button. However, even if it is closed, the tray will open automatically when copying or printing is started.

Close the tray when it is not in use.

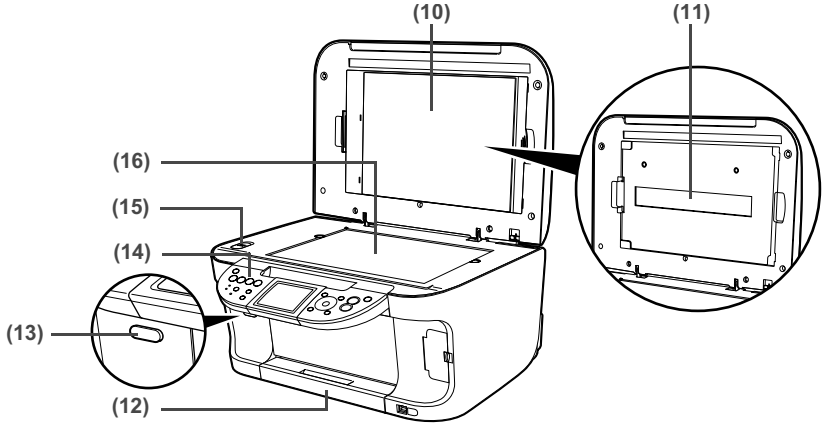

(10) FAU (Film Adapter Unit) Protective Sheet
Protects the FAU Lamp and the Platen Glass. The film guides used for scanning in film are stored at the rear.

Remove when performing Film Direct Print. Always attach this cover when copying or scanning originals other than film originals (e.g., documents or photographs).

(11) FAU Lamp
Lights up the film original when scanning films.

(12) Cassette
Load paper to be used regularly here. Paper feeds automatically, one sheet at a time.

*Legal-sized paper and 2.13" x 3.39"/ 54.0 x 86.0 mm size paper are not loadable in the Cassette.

(13) Open Button
Press this button to open the Paper Output Tray.

(14) Operation Panel
Used to change the settings or operate the machine. See "Operation Panel Name and Functions" on page 15.

(15) Scanner Lock Switch
Locks the internal fluorescent lamp that is located underneath the Platen Glass (scanning lamp), to be used when transporting the machine. Make sure to unlock it before turning the machine on.

(16) Platen Glass
Used to load a document to be processed.

■ Rear View and Interior

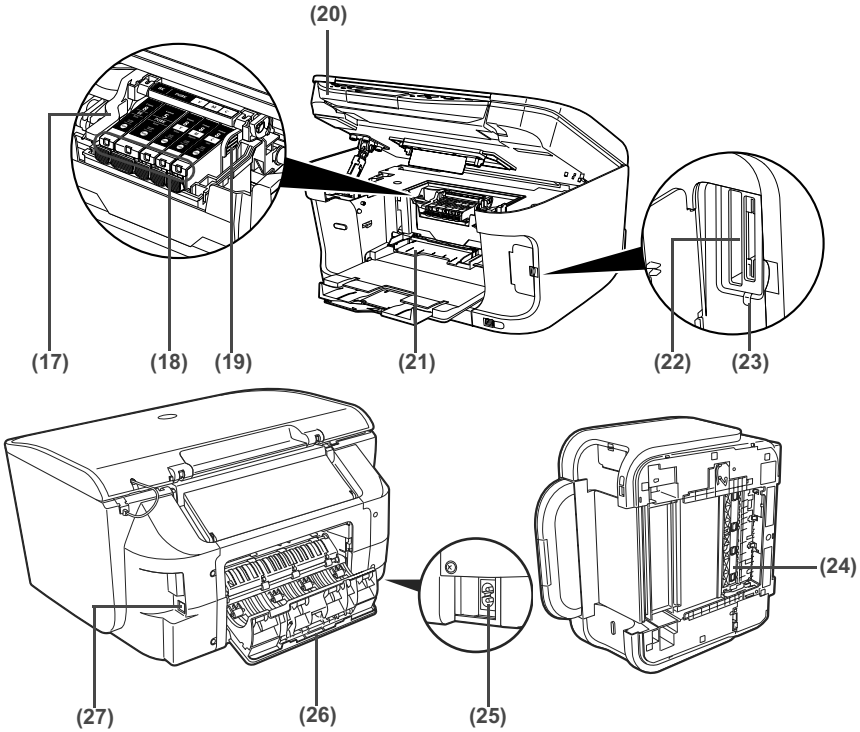

(17) Print Head Lock Lever
Used to fix the Print Head.

Important Do not pull up this lever after installing the Print Head.

(18) Ink Tank Lamp
Lights or flashes red to indicate the status of the ink tank. You can check the status of each ink tank according to the way its lamp flashes. See "Ink Tank Lamps" on page 15.

(19) Print Head Holder
Used to install a Print Head.

(20) Scanning Unit (Printer Cover)
This is the unit used to scan documents.

(21) Inner Cover
Open this cover when replacing the ink tanks.

(22) Card Slot
Set the memory card containing photos here. For details, see "Inserting the Memory Card" on page 45.

(23) Access Lamp
Lights when a memory card is inserted into the Card Slot. This lamp flashes while the machine is reading or writing data from/to the memory card. For details, see "Inserting the Memory Card" on page 45.

(24) Duplexing Transport Unit
Open when clearing jammed paper after pulling out the Cassette.

(25) Power Connector
This is the connector used to connect the provided power cord.

(26) Rear Cover
Open when clearing jammed paper.

(27) USB Connector (for computer)
This is the connector used to connect the machine to a computer using a USB cable.

Important

While the machine is printing from or scanning images to the computer, or the computer is in the sleep mode or standby mode, do not disconnect and connect the USB cable.

Note

- For information on how to install the Print Head and ink tanks, refer to the *Easy Setup Instructions*.

Ink Tank Lamps

- You can check the status of each ink tank according to the way its lamp flashes.

  On: The machine is ready to print.

  Slow flashing (about three seconds): Ink is low. Prepare a new ink tank. For details, see "Getting the Ink Level Information" on page 95.

  Fast flashing (about one second): Ink tank is empty, or the machine is not ready due to an error.

  Off: Make sure all the ink tanks are installed properly. If an Ink Tank Lamp remains unlit even after reinstalling ink tanks, an error has occurred and the machine is not ready to print.

■ Operation Panel Name and Functions

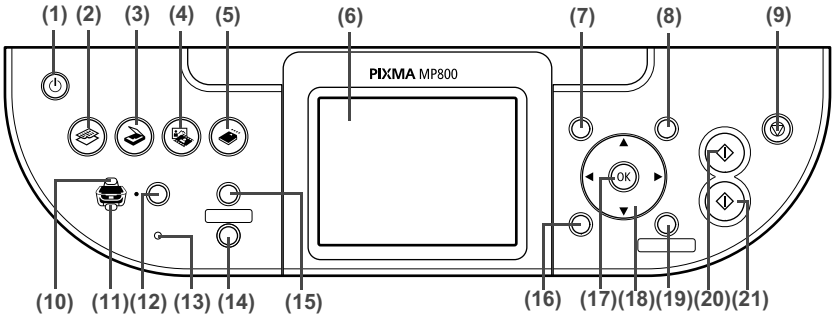

(1) [ON/OFF]
Turns the machine ON and OFF. Before turning ON the machine, make sure the Document Cover is closed.

(2) [COPY]
Switches the machine to Copy mode. Flashes when the machine is turned on.

(3) [SCAN]
Switches the machine to Scan mode. This button is used when the machine is connected to a computer. (Refer to the *Scan Guide*.)

(4) [PHOTO/FILM]
Switches the machine to Photo/film mode.

(5) [MEMORY CARD]
Switches the machine to Memory card mode.

(6) LCD (Liquid Crystal Display)
Displays messages, menu selections, and the operation status.

(7) [Menu]
Used to display menus.

(8) [Settings]
Use to configure the page size, media type, and image correction settings.

(9) [Stop/Reset]
Cancels operations. If this button is pressed during printing, the machine aborts printing.

(10) Auto Sheet Feeder Lamp
Lit when the Auto Sheet Feeder is selected.

(11) Cassette Lamp
Lit when the Cassette is selected.

(12) [Feed Switch]
Selects the paper source. Press this toggle switch to change the paper source between the Auto Sheet Feeder and Cassette.

(13) Alarm Lamp
Lights or flashes orange, when an error occurs, or when paper or ink has run out.

(14) [Search]
Looks up target photos in the memory card using the shooting date as the search key. See "Searching for Photos with the Shooting Date (Search)" on page 50.

(15) [Photo Index Sheet]
Switches to Photo Index Sheet mode. See "Printing by Using the Photo Index Sheet" on page 56.

(16) [Back]
Allows you to return to the previous screen.

(17) [OK]
Finalizes your selection for the menu or setting item.

Restores the machine to normal operation after a printing error was resolved, or if paper jams are cleared.

(18) [▲] [▼] [◀] [▶]
Scroll through menu selections, and increase or decrease the number of copies. You can use these buttons when <▲>, <▼>, <◀>, and <▶> are displayed on the LCD.

(19) [Trimming]
Use to crop the photo that is displayed. See "Printing a Specified Area (Trimming)" on page 51.

(20) [Black]
Starts black & white copying, or photo scanning.

(21) [Color]
Starts color copying, photo printing, or scanning.

Turning the Machine ON and OFF

Turn on the machine before starting printing.

■ Turning on the Machine

Before turning on the machine, confirm that the Print Head and ink tanks are set into place.

Note If preparatory operations above are not yet finished, follow the *Easy Setup Instructions* to complete them.

1 Press [ON/OFF].

[COPY] flashes green for a while, and then turns on.

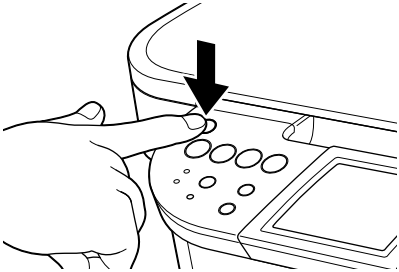

Note If the Alarm Lamp lights orange and an error message is displayed on the LCD, see "An Error Message is Displayed on the LCD" on page 113.

■ Turning off the Machine

1 To turn off the machine, press [ON/OFF].

The machine is off when the currently selected Mode button (e.g. COPY) stops flashing and all Operation Panel lamps are off.

Important When removing the power plug after turning off the machine, be sure to check that all the lamps on the Operation Panel are not lit. If the power plug is removed from the wall outlet with the lamps on the Operation Panel lit or blinking, the machine cannot protect its Print Head and may be unable to print.

See "Keeping the Best Printing Results" on page 100.

■ Setting the Power Save Mode

The machine is equipped with a Power save mode. In the Power save mode, the internal fluorescent lamp are turned off, and the selected Mode Lamp stays lit. You can configure the interval that the machine waits before entering Power save mode. See "Power save setting" on page 94.

When you try to copy or scan, the machine will exit from Power save mode.

If you use the machine frequently, we recommend that you set the Power save transfer time to 1 hour or 8 hours.

■ The Screen-saver Mode

The LCD goes out if the machine is not operated for 5 minutes. Press any button to restore the display. You cannot change the period before the LCD goes out.

Loading Documents to Copy or Scan

This section describes how to load the document on the Platen Glass.

■ Document Requirements

The documents you load on the Platen Glass for copying or scanning must meet these requirements:

Document type	● **Documents** ● **Photographs** ● **Book** *** For details on positive and negative 35 mm film strip and 35 mm slides, see "Photo Printing from Photo or Film" on page 60.**
Size (W x L)	**Max. 8.5" x 11.7" / 216 x 297 mm**
Thickness	**Max. 0.8" / 20 mm**

■ Loading Documents

Load documents that you want to copy or scan on the Platen Glass. For how to load a photo, see "Scanning a Photo" on page 60. For how to load a film, see "Scanning a Film" on page 62.

Note Make sure any glue, ink, correction fluid, or the like is completely dry before loading the document on the Platen Glass.

1 Lift the Document Cover.

2 Load your document on the Platen Glass.

- Place your document face down on the Platen Glass.
- Align the upper left corner of your document with the alignment mark on the upper left corner of the Platen Glass.

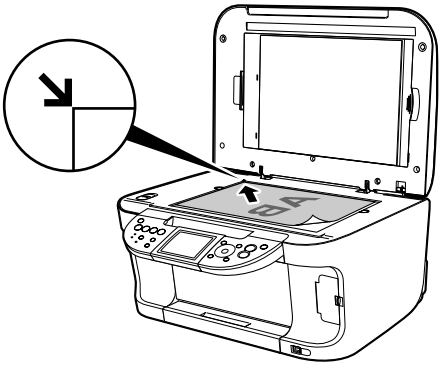

Note

- The machine cannot scan the area within about 0.04" / 1 mm from the rear edge, and within about 0.08" / 2 mm from the left edge of the Platen Glass.
- You can also scan in originals that are up to 0.8" / 20 mm thick, such as books. Set them on the Platen Glass in the same way as documents.

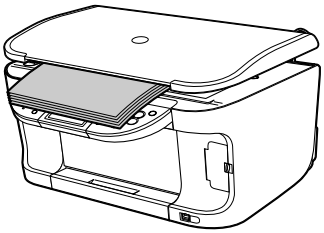

3 Gently close the Document Cover.

Loading Paper

This section describes how to load paper in the Auto Sheet Feeder and the Cassette.

■ Paper Handling

● Recommended Paper and Requirements

Media Type	Model*1	Paper Support Load Limit		Printer Driver Setting for [Media Type]
		Auto Sheet Feeder	Cassette	
Plain Paper	—	0.52"/13 mm	0.52"/13 mm	[Plain Paper]
High Resolution Paper	HR-101N	80 sheets (A4, Letter)	80 sheets (A4, Letter)	[High Resolution Paper]
Super White Paper	SW-201	0.52"/13 mm (A4, Letter)	0.52"/13 mm (A4, Letter)	[Plain Paper]
Glossy Photo Paper	GP-401	10 sheets (A4, Letter), 20 sheets (4" x 6" / 101.6 x 152.4 mm, Credit Card)	10 sheets (A4, Letter), 20 sheets (4" x 6" / 101.6 x 152.4 mm), Not supported (Credit Card)*5	[Glossy Photo Paper]
Glossy Photo Paper “Everyday Use”	GP-501	10 sheets (A4), 20 sheets (4" x 6" / 101.6 x 152.4 mm)	10 sheets (A4), 20 sheets (4" x 6" / 101.6 x 152.4 mm)	[Glossy Photo Paper]
Matte Photo Paper	MP-101	10 sheets (A4, Letter), 20 sheets (4" x 6" / 101.6 x 152.4 mm)	10 sheets (A4, Letter), 20 sheets (4" x 6" / 101.6 x 152.4 mm)	[Matte Photo Paper]

Media Type	Model[*1]	Paper Support Load Limit		Printer Driver Setting for [Media Type]
		Auto Sheet Feeder	Cassette	
Photo Paper Plus Double Sided[*2, *3]	PP-101D	10 sheets (A4, Letter, 5" x 7" / 127.0 x 177.8 mm)	10 sheets (A4, Letter, 5" x 7" / 127.0 x 177.8 mm)	[Photo Paper Plus Double Sided]
Photo Paper Plus Glossy[*3]	PP-101	10 sheets (A4, Letter, 5" x 7" / 127.0 x 177.8 mm), 20 sheets (4" x 6" / 101.6 x 152.4 mm)	10 sheets (A4, Letter, 5" x 7" / 127.0 x 177.8 mm), 20 sheets (4" x 6" / 101.6 x 152.4 mm)	[Photo Paper Plus Glossy]
Photo Paper Plus Semi-gloss[*3]	SG-101	10 sheets (A4, Letter), 20 sheets (4" x 6" / 101.6 x 152.4 mm)	10 sheets (A4, Letter), 20 sheets (4" x 6" / 101.6 x 152.4 mm)	[Photo Paper Plus Glossy]
Photo Paper Pro[*3]	PR-101	10 sheets (A4, Letter), 20 sheets (4" x 6" / 101.6 x 152.4 mm)	10 sheets (A4, Letter), 20 sheets (4" x 6" / 101.6 x 152.4 mm)	[Photo Paper Pro]
Photo Stickers[*4]	PS-101	1 sheet	Not loadable[*5]	[Photo Paper Plus Glossy]
Transparencies	CF-102	30 sheets	30 sheets	[Transparencies]
T-Shirt Transfers[*2]	TR-301	1 sheet	1 sheet	[T-Shirt Transfers]
Envelopes[*2]	—	10 envelopes	5 envelopes	[Envelope]

Paper having a "Model Number" is Canon specialty media.

You may not be able to purchase some Canon branded paper depending on your country.

[*1] Paper is not sold in the US by Model Number. Purchase paper by the name.

[*2] This is available only when printing from your computer.

[*3] When loading a stack of paper, the printed side may be marked when it is fed in. If this happens, load paper one sheet at a time.

[*4] When Windows is being used, you can specify the print setting easily by using the Easy-Photo Print provided with the Setup CD-ROM.

[*5] Feeding from the Cassette can damage the machine. Always load in the Auto Sheet Feeder.

Note

- For specifying the page size and media type when performing copy direct printing, see “Changing the Print Settings” on page 33.
- For specifying the page size and media type when printing photos saved on mobile phones, see “Setting the Page Size, Media Type, and Layout When Printing from a Mobile Phone” on page 77.
- When using plain paper (64 gsm or 17 lb), up to 150 sheets (13 mm or 0.52 inches in height) can be loaded in the Auto Sheet Feeder and Cassette respectively. Select [Plain Paper] from [Media Type] in the printer driver.
  For a detailed description of printing media types, refer to the *Printer Driver Guide*.

Media types you cannot use

Do not use the following types of paper. Using such paper will not only produce unsatisfactory results, but can also cause the machine to jam or malfunction.

- Folded, curled or wrinkled paper
- Damp paper
- Excessively thin paper (less than 64 gsm or 17 lb)
- Excessively thick paper* (more than 105 gsm or 28 lb)(non-Canon branded paper)
- Picture postcards
- Postcards affixed with photos or stickers
- Envelopes with double flaps
- Envelopes with sticker flaps
- Envelopes with an embossed or treated surface
- Any type of paper with holes

Handling paper

- Hold the paper as closely as possible to its edges and try not to touch the print surface. Print quality will deteriorate if the print surface is damaged or becomes dirty.
- Do not touch the print surface until the ink has dried. If prints get wet, do not touch the printed side until they dry.
- Paper may curl or the print surface may become smudged if you use a large amount of ink for printing. In this case, select <ON> for <Prevent paper abrasion> under <Device settings>. See "If printing surface abrasion is not resolved even after taking the actions above:" on page 124. Do not print photos or documents that contain graphics on paper that curls easily. Remove this kind of paper for printing text-only documents.
- If the paper is curled, uncurl it before printing. To uncurl the paper, see "Paper is curled." on page 123.
- Put unused paper back into the package, and store them out of direct sunlight in a place where the temperature and humidity are low. Keep them on a level surface to avoid curling and wrinkling.
- If the printed area is traced with a highlight pen or paint-stick or stained with water or sweat, ink may blur depending on the paper.

Photo Paper Pro guidelines

- Do not touch the print surface until the ink is dry (approx. 30 minutes). Colors in dark images may appear indistinct at first, but will become clearer after approx. 30 minutes.
- Images may become smudged if you place them in an album before the ink is completely dry. It is recommended that you allow the ink to dry for 24 hours.
- Do not attempt to dry the ink with a hair dryer or by exposing printouts to direct sunlight.
- Do not store or display printouts in hot, damp, or humid conditions. Never expose them to heat or direct sunlight.
- Store printouts in photo albums, photo frames, or presentation binders to protect them from direct exposure to air or sunlight.
- Do not mount printouts in an adhesive-type album as you may not be able to remove them.
- Be aware that some types of clear plastic folders and albums may cause the edges of the paper to turn yellow.

■ About the Auto Sheet Feeder and the Cassette

You can load paper in both the Auto Sheet Feeder and Cassette.

Loading paper in the Auto Sheet Feeder is easy, and is convenient if you frequently switch to and print on various sizes or types of paper.

Loading paper in the Cassette allows you to print without reloading paper for each job. This is convenient for loading a certain type of paper, such as plain paper, you regularly print onto.

Loading paper in both the Auto Sheet Feeder and Cassette makes the following paper feed methods available:

* Some types of paper cannot be used on the Cassette. See “Recommended Paper and Requirements” on page 19.

● Changing the paper source to feed different types/sizes of paper

If you load plain paper in the Cassette and photo paper in the Auto Sheet Feeder, changing the paper source allows you to print on both types of paper without removing and reloading paper. To change the paper source, use [Feed Switch] on the machine or printer driver.

You can also specify the type/size of paper to be fed from the Cassette for regular use with the printer driver. For example, you can specify that Letter-sized plain paper is always fed from the Cassette whenever you print.

Note

- For information on page size, media type, and paper support load limit for Auto Sheet Feeder or Cassette, see “Recommended Paper and Requirements” on page 19.
- For information on the printer driver settings, refer to the *Printer Driver Guide.*

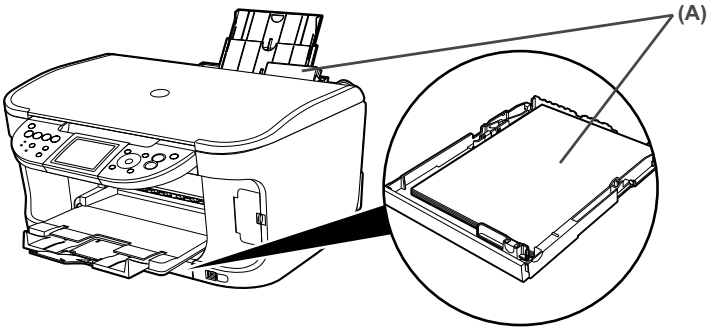

(A) You can switch between paper loaded in the Auto Sheet Feeder (e.g., 4" x 6" / 101.6 x 152.4 mm) or the Cassette (e.g., A4/Letter-sized paper).

● Continuous printing on the same type/size of paper by using both the Auto Sheet Feeder and Cassette together

If the Auto Sheet Feeder or Cassette runs out of paper, the paper source automatically switches to the other one. This is useful for printing onto a large volume of paper. To use this feature, you can select this setting with the printer driver beforehand.

Important

- This feature can be used only when printing from a computer.
- This feature can be used only when paper of the same size and media type are loaded in the Cassette and Auto Sheet Feeder.

Note

- For information on page size, media type, and paper support load limit for Auto Sheet Feeder or Cassette, see "Recommended Paper and Requirements" on page 19.
- For information on the printer driver settings, refer to the *Printer Driver Guide*.

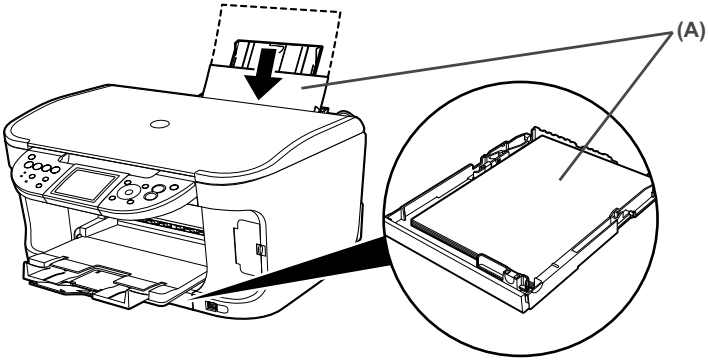

(A) If the Auto Sheet Feeder runs out of paper, the paper source automatically changes to the Cassette.

Changing the Paper Source

Before printing, confirm that the location where you have loaded paper is selected as a paper source. Press [Feed Switch] to change the paper source.

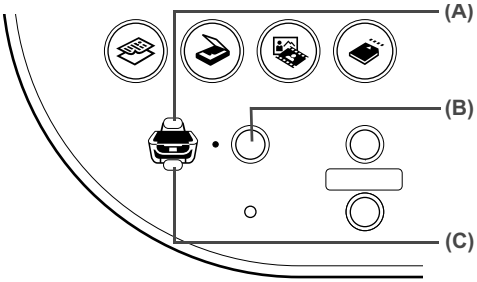

(A) Auto Sheet Feeder Lamp

(B) [Feed Switch]

(C) Cassette Lamp

Note

- Press [Feed Switch] so that the Auto Sheet Feeder Lamp is lit when feeding paper from the Auto Sheet Feeder and the Cassette Lamp is lit when feeding paper from the Cassette.
- You can also select the paper source with the printer driver when printing from the computer. For details, refer to the *Printer Driver Guide*.

■ Loading the Print Media in the Auto Sheet Feeder

● Loading Paper

Note For detailed information on the specialty media Canon provides for use with its various printers, see "Recommended Paper and Requirements" on page 19.

1 Flatten the four corners of the paper before loading it.

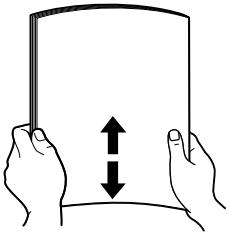

Note

- Align the edges of paper neatly before loading. Loading paper without aligning the edges may cause paper jams.
- When paper is curled, hold the opposing curled corners and gently bend them in the opposite direction until the paper becomes completely flat. See "Paper is curled." on page 123.

2 Prepare to load paper.

(1) Open the Paper Support, then pull out the Paper Support Extension to support the paper.

(2) Press the Open Button to open the Paper Output Tray.

(3) Pull out the Paper Output Tray Extension completely.

Note After printing, to put back the Paper Output Tray Extension, push it back while raising it a little.

(4) Press [Feed Switch] so that the Auto Sheet Feeder Lamp (A) lights.

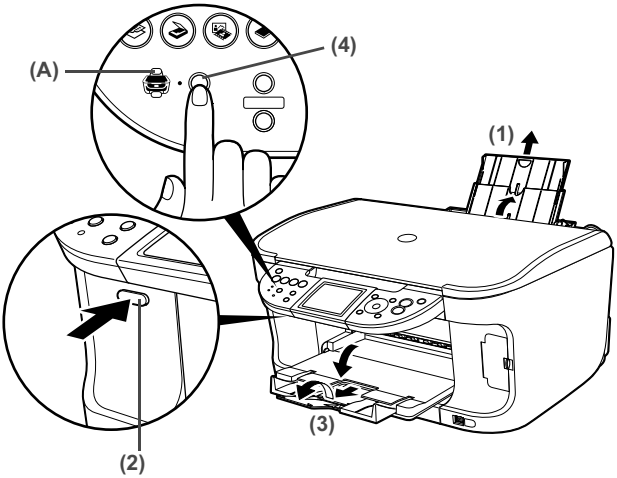

Note You can also select the paper source with the printer driver. For details, refer to the *Printer Driver Guide*.

3 Load the paper.

(1) Load the paper into the Auto Sheet Feeder with the print side facing UP.

(2) Align the paper stack against the Cover Guide on the right side of the Paper Support.

Important Ensure that the Cover Guide stands when you load paper in the Auto Sheet Feeder.

(3) Pinch the Paper Guide and slide it against the left side of the paper stack.

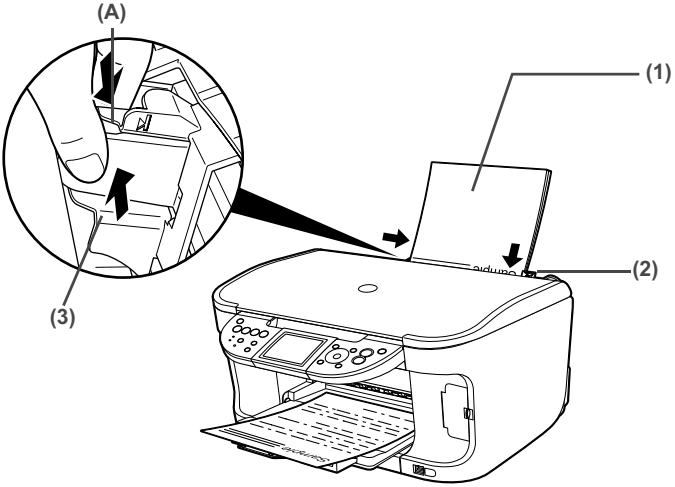

Important Do not load the paper beyond this Load Limit Mark (A).

Note

- You can use general copy paper or Canon's Super White Paper SW-201.
- You can load up to 150 sheets of plain paper (64 gsm or 17 lb, 13 mm or 0.52 inches in height) in the Auto Sheet Feeder. However, the paper may not be fed normally depending on its media type or your environment where the temperature and humidity are high or low. In that case, reduce the amount of paper to half (approx. 0.2" / 5 mm in height).
- Remove the printed sheets from the Paper Output Tray before the count reaches 50.
- Do not touch the printed surfaces until the ink dries. For specific drying times, refer to the instructions packaged with your media.

Loading Envelopes

Use either European DL or US Comm. Env. #10 size envelopes.

The address is rotated automatically to match the direction of the envelope when printing.

Important

- Envelopes can be used only when printing from a computer.
- Do not use envelopes with embossed or treated surfaces, a double flap, pressure seals or sticker flaps.
- Select either [DL Env.] or [Comm. Env. #10] according to the envelope size you are using.
- The printed image will be upside down depending on the application. If this occurs, open the printer properties dialog box then select the [Rotate 180 degrees] check box on the [Page Setup] tab.

  For information on the printer driver settings, refer to the *Printer Driver Guide*.

1 Load the envelope against the Cover Guide on the right side of the Paper Support with the print side facing UP, and the rear flaps DOWN on the left.

Important Ensure that the Cover Guide stands when you load paper in the Auto Sheet Feeder.

Note A maximum of 10 envelopes can be loaded at once.

2 Pinch the Paper Guide and slide it against the left side of the envelope.

3 Press [Feed Switch] so that the Auto Sheet Feeder Lamp lights.

4 Select [Envelope] in [Media Type], and then select [DL Env.] or [Comm. Env. #10] in [Page Size].

For information on the printer driver settings, refer to the *Printer Driver Guide*.

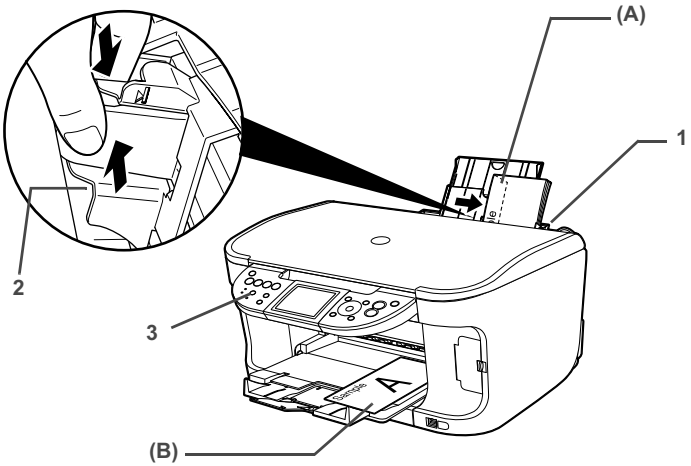

Note

- Fold the envelope flap shut (A).
- Printing direction (B).

Loading Other Small-Sized Paper in the Auto Sheet Feeder

Important Loading plain paper cut to 4" x 6" / 101.6 mm x 152.4 mm, 5" x 7" / 127.0 x 177.8 mm, or 2.13" x 3.39" / 54.0 x 86.0 mm (Credit Card) size for a trial printing can cause paper jams.

1 Load the paper into the Auto Sheet Feeder with the print side facing UP and align the Cover Guide on the right side of the Paper Support.

Important Ensure that the Cover Guide stands when you load paper in the Auto Sheet Feeder.

Note
- Load the paper lengthways regardless of the direction of the document.
- You can load up to 20 sheets of 4" x 6" or Credit Card-sized paper, and 10 sheets of 5" x 7"-sized paper.

2 Pinch the Paper Guide and slide it against the left side of the paper stack.

3 Press [Feed Switch] so that the Auto Sheet Feeder Lamp lights.

4 When performing copy direct printing without using a computer, press [Settings] to select the page size. When using the machine connected to a computer, select the page size of the loaded paper from [Page Size] in the printer driver.

For a detailed description of the printer driver settings, see "Printing with Windows" on page 82, or "Printing with Macintosh" on page 84.

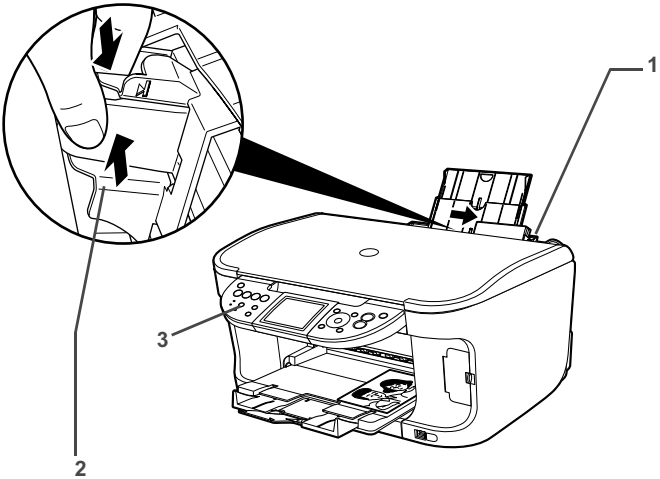

Important Always load paper in portrait orientation (A). Loading paper in landscape orientation (B) can cause the paper to be jammed.

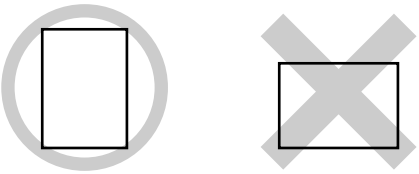

(A) (B)

Note We recommend using genuine Canon photo media when printing photographs. See "Recommended Paper and Requirements" on page 19.

■ Loading the Print Media in the Cassette

Depending on page size and media type, some paper must always be loaded in the Auto Sheet Feeder.

If you intend to use only the Cassette, check any usage restrictions in advance.

See “Recommended Paper and Requirements” on page 19.

● Loading Paper

Note

For detailed information on the specialty media Canon provides for use with its various printers, see “Recommended Paper and Requirements” on page 19.

1 Flatten the four corners of the paper before loading it.

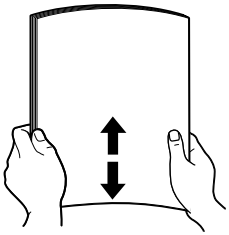

Note

- Align the edges of paper neatly before loading. Loading paper without aligning the edges may cause paper jams.
- When paper is curled, hold the opposing curled corners and gently bend them in the opposite direction until the paper becomes completely flat. See “Paper is curled.” on page 123.

2 Prepare to load paper.

(1) Pull out the Cassette from the machine.

(2) Remove the Cover on the Cassette.

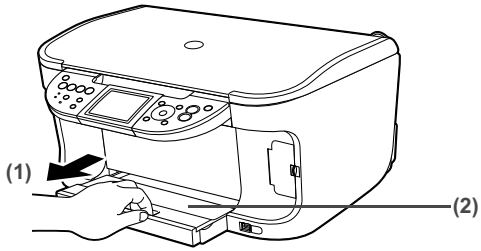

3 Load the paper. (Print side facing DOWN)

(1) Load the paper into the Cassette with the print side facing DOWN.

(2) Align the paper stack against the right side of the Cassette.

(3) Slide the Paper Guides to fit the loaded paper stack.

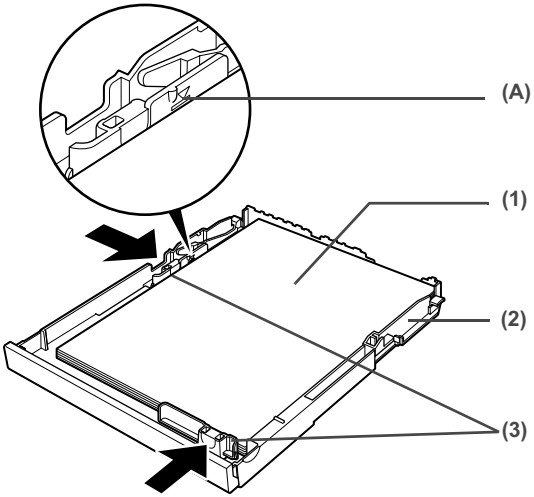

Important Do not load the paper beyond this Load Limit Mark (A).

Note

- You can use general copy paper or Canon's Super White Paper SW-201.
- You can load up to 150 sheets of plain paper (64 gsm or 17 lb, 13 mm or 0.52 inches in height) in the Cassette. However, do not stack more than 50 sheets in the Paper Output Tray.
- Do not touch the printed surfaces until the ink dries. For specific drying times, refer to the instructions packaged with your media.

4 Insert the Cassette into the machine.

(1) Set the Cover on the Cassette.

(2) Insert the Cassette into the machine.
Push the Cassette all the way into the machine.

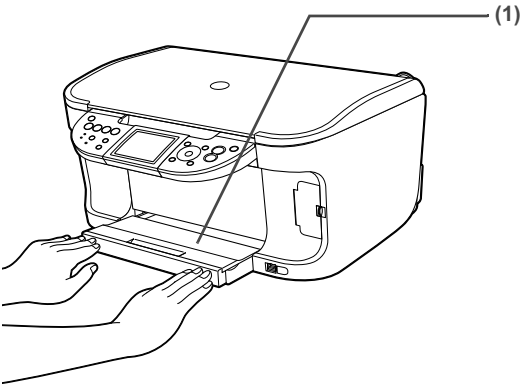

5 Prepare the Paper Output Tray.

(1) Press the Open Button to open the Paper Output Tray.

(2) Pull out the Paper Output Tray Extension completely.

Note After printing, to put back the Paper Output Tray Extension, push it back while raising it a little.

(3) Press [Feed Switch] so that the Cassette Lamp (A) lights.

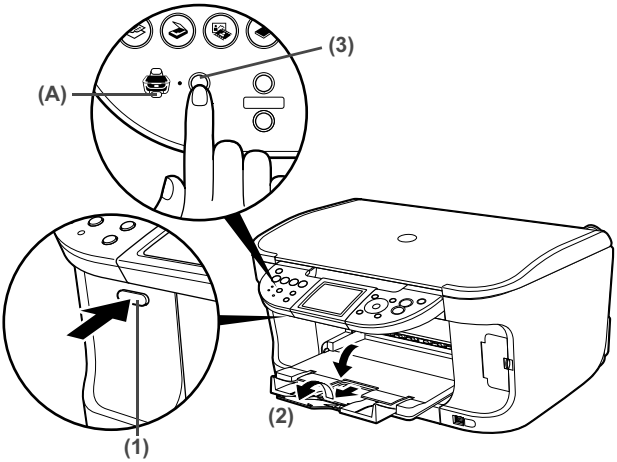

Note You can also select the paper source with the printer driver. For details, refer to the *Printer Driver Guide*.

Loading Envelopes

Use either European DL or US Comm. Env. #10 size envelopes.

The address is rotated automatically to match the direction of the envelope when printing.

Important

- Envelopes can be used only when printing from a computer.
- Do not use envelopes with embossed or treated surfaces, a double flap, pressure seals or sticker flaps.
- Select either [DL Env.] or [Comm. Env. #10] according to the envelope size you are using.
- The printed image will be upside down depending on the application. If this occurs, open the printer properties dialog box then select the [Rotate 180 degrees] check box on the [Page Setup] tab.

  For information on the printer driver settings, refer to the *Printer Driver Guide*.

1 Align the envelope stack against the right side of the Cassette with the print side facing DOWN, and the rear flaps UP on the left side.

Note A maximum of 5 envelopes can be loaded at once.

2 Slide the Paper Guides against the sides of the envelope.

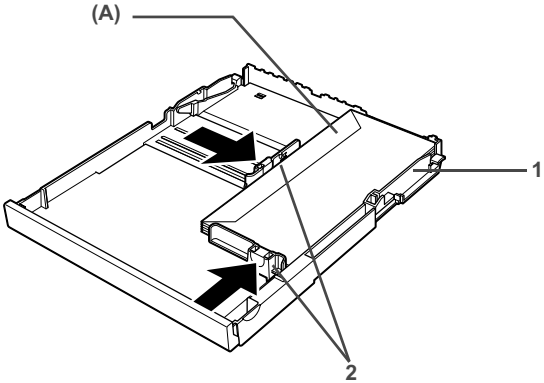

Note Fold the envelope flap shut (A).

3 Press [Feed Switch] so that the Cassette Lamp lights.

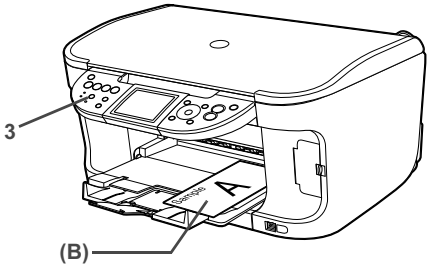

Note Printing direction (B).

4 Select [Envelope] in [Media Type], and then select [DL Env.] or [Comm. Env. #10] in [Page Size].

For information on the printer driver settings, refer to the *Printer Driver Guide*.

Loading 4" x 6"- or 5" x 7"-Sized Paper in the Cassette

Important

- Do not leave photo paper, such as Photo Paper Pro, in the Cassette for a long time. This may cause paper discoloration due to natural aging.
- If you are using photo paper such as Photo Paper Pro and have loaded them in the Cassette, the printout may have roller traces on the print surface. To avoid this, load paper in the Auto Sheet Feeder.
- Loading plain paper cut to 4" x 6" / 101.6 mm x 152.4 mm or 5" x 7" / 127.0 x 177.8 mm size for a trial printing can cause paper jams.

1 Load the paper into the Cassette with the print side facing DOWN.

Note

- Load the paper lengthways regardless of the direction of the document.
- You can load up to 20 sheets of 4" x 6"-sized paper or up to 10 sheets of 5" x 7"-sized paper.

2 Align the paper stack against the right side of the Cassette.

3 Slide the Paper Guides to fit the loaded paper stack.

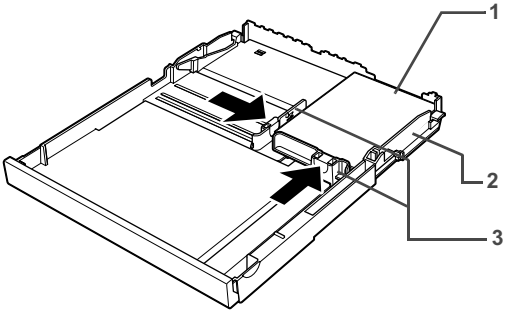

4 Press [Feed Switch] so that the Cassette Lamp lights.

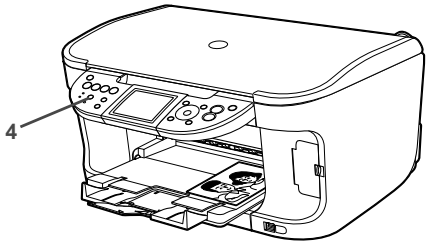

5 When performing copy direct printing without using a computer, press [Settings] to select the page size. When using the machine connected to a computer, select the page size of the loaded paper from [Page Size] in the printer driver.

For a detailed description of the printer driver settings, see "Printing with Windows" on page 82, or "Printing with Macintosh" on page 84.

Important Always load paper in portrait orientation (A). Loading paper in landscape orientation (B) can cause the paper to be jammed.

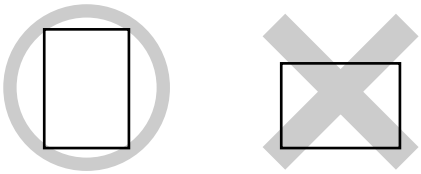

Note We recommend using genuine Canon photo media when printing photographs. See "Recommended Paper and Requirements" on page 19.

Changing the Print Settings

This section describes the Settings screen that can be specified on the Operation Panel when copying, or printing from memory card, photos or films.

■ To Change Print Settings

You can change the print settings such as page size, media type, bordered or borderless print, etc.

● How to change the Settings screen

This section describes the steps to specify the page size for Memory card mode to <4" x 6" (101.6 x 152.4)> as an example. For information on each item, see “Print Setting Items” on page 34.

1 Display the Settings screen.

(1) Press [Settings].
The Settings screen is displayed.

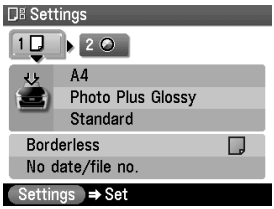

2 Select the Setting tab.

(1) Use [◀] or [▶] to select the Setting tab.
Select tab 1 here.

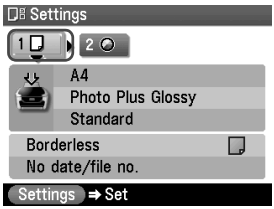

3 Select the setting item.

(1) Use [▲] or [▼] to select the setting item.
Select <A4> here.

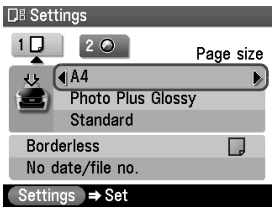

4 Change the setting.

(1) Use [◀] or [▶] to change the setting.
Change to <4" x 6" (101.6 x 152.4)> here.

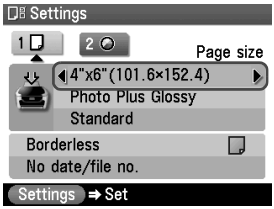

5 Complete setting.

(1) Press [Settings].
Return to the Settings screen.

■ Print Setting Items

Each tab contains the following setting items. To change the tab, use [▲] to select the tab and use [◀] or [▶].

Note Depending on the functions specified in the Copy, Memory card, or Photo/film mode, some setting items cannot be specified in combination.

● Copy mode

This section describes the Settings screen for Copy mode.

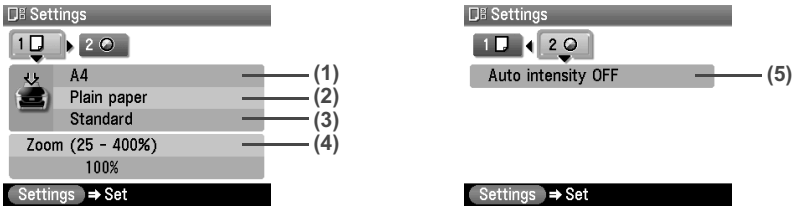

Tab 1

You can specify the paper settings for printing or print quality.

(1) You can specify the page size.
8.5" x 11" (215.9 x 279.4), A4, B5, A5, 4" x 6" (101.6 x 152.4), 5" x 7" (127 x 177.8), Credit card

Important Some page sizes cannot be loaded in the Cassette and should be loaded in the Auto Sheet Feeder.

Note Some of these are not available depending on the country of purchase.

(2) You can specify the media type.
Plain paper, Photo Paper Pro, Photo Plus Glossy, Matte Photo Paper, Glossy Photo Paper

(3) You can adjust image quality according to the documents you want to copy.
Fast, Standard, High

Note

- <Fast> can be selected when <Plain paper> is selected as the media type.
- When using <Fast> with media type set to <Plain paper>, if the quality is different from that expected, select <Standard> or <High> and try copying again.
- Select <High> to copy in grayscale. Grayscale renders tones in a range of grays instead of black or white.

(4) You can specify the reduction or enlargement method.
Same magnification, Preset ratio, Zoom (25 - 400%), Fit-to-page

Tab 2

You can specify auto intensity.

(5) This function automatically adjusts the intensity of the document on the Platen Glass.
Auto intensity ON, Auto intensity OFF

Memory card and Photo/film modes

This section describes the Settings screen for Memory card and Photo/film modes.

Tab 1

You can specify the settings such as the paper, bordered/borderless, and Date/file no.

Example: Memory card mode

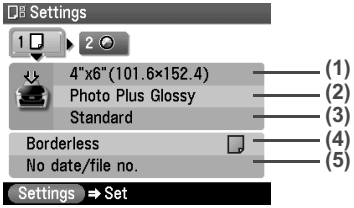

Note

You can change the print settings on this screen when a PictBridge compliant device is connected to this machine.

(1) Select the page size.
8.5" x 11" (215.9 x 279.4), A4, 4" x 6" (101.6 x 152.4), 5" x 7" (127 x 177.8), Credit card

Important

Some page sizes cannot be loaded in the Cassette and should be loaded in the Auto Sheet Feeder.

Note

Some of these are not available depending on the country of purchase.

(2) Select the media type.
Plain paper, Photo Paper Pro, Photo Plus Glossy, Matte Photo Paper, Glossy Photo Paper

(3) Select the print quality.
Standard, High

(4) Select bordered or borderless print.
Bordered, Borderless

Note

When <Plain paper> is selected in <Media type>, bordered printing will be performed even if you select <Borderless>.

(5) Select whether to print the shooting date, file no., or not.[*1]
No date/file no., Print date only, Print file no. only, Print date & file no.

[*1] Can be selected only in Memory card mode.

Tab 2

Allows you to optimize photos with the functions below.

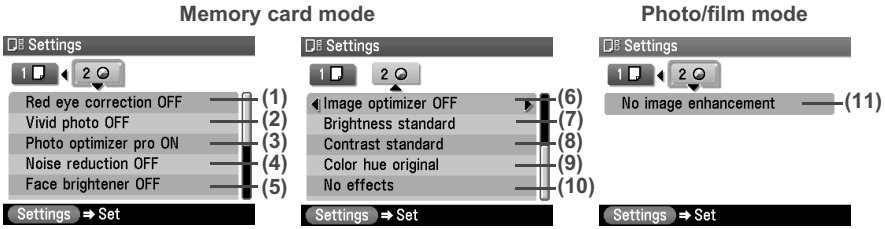

(1) Red eye correction ON, Red eye correction OFF[*1]
When <Red eye correction ON> is selected, portraits with a red eye caused by flash photography are corrected in print.

(2) Activate/deactivate Vivid photo function.[*1]
This function makes green and blue more lively.
Vivid photo ON, Vivid photo OFF

(3) Activate/deactivate the Photo Optimizer pro function.[*1]
This function automatically optimizes brightness and tone of a photo.
Photo optimizer pro ON, Photo optimizer pro OFF

(4) Activate/deactivate the Noise reduction function.[*1]
This function reduces the noise on blue areas like the sky as well as on black areas.
Noise reduction ON, Noise reduction OFF

(5) Activate/deactivate Face brightener function.[*1]
This function brightens a darkened face on the photo taken against the light.
Face brightener ON, Face brightener OFF

(6) Choosing <Image optimizer ON> enables you to correct and smooth the jagged contours for printing.[*1]
Image optimizer ON, Image optimizer OFF

(7) Adjust brightness.[*1]
Brightness +2, Brightness +1, Brightness standard, Brightness -1, Brightness -2

(8) Adjust contrast.[*1]
Contrast +2, Contrast +1, Contrast standard, Contrast -1, Contrast -2

(9) Adjust color hue.[*1]
Color hue red +2, Color hue red +1, Color hue original, Color hue yellow +1, Color hue yellow +2

(10) Select the type of special effects applied to the photo, such as printing in sepia tones or with a sketch illustration like effect.[*1]
No effects, Sepia, Simulate illustration

(11) Choosing <Fade restoration> corrects the color when printing photos that have faded or color cast over time.
Choosing <Face brightener> brightens a darkened face on a portrait taken against the light.[*2]
No image enhancement, Fade restoration, Face brightener

[*1] Can be selected only in Memory card mode.

[*2] Can be selected only in Photo/film mode.

Chapter 2
Copying

Making Copies

This section describes the basic procedure to make copies.

1 Prepare for copying.

(1) Press [ON/OFF] to turn on the machine.
See “Turning on the Machine” on page 17.

(2) Press [COPY].

(3) Load paper.
See “Loading Paper” on page 19.

(4) Ensure that the proper paper source is selected.
See “Changing the Paper Source” on page 23.

Note Specify [Feed Switch] so that the Auto Sheet Feeder Lamp is lit when feeding paper from the Auto Sheet Feeder and the Cassette Lamp is lit when feeding paper from the Cassette.

2 Start copying.

(1) Check the page size and media type.

Note Press [Settings] to check or change the page size, media type, or other settings. See “To Change Print Settings” on page 33.

(2) Use [▲] or [▼] to specify the number of copies.

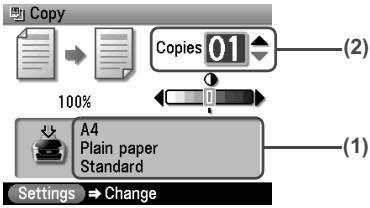

The following information is displayed as well.

Intensity: Pressing [◀] decreases the intensity, and pressing [▶] increases the intensity.
You can also use the auto intensity. See “Print Setting Items” on page 34.

(3) Load the document on the Platen Glass.

Note For information on the types and conditions of documents which you can copy, see “Loading Documents” on page 18.

(4) Press [Color] for color copying, or [Black] for black & white copying.
The machine starts copying.

Note To cancel copying, press [Stop/Reset].

■ Reducing or Enlarging a Copy

You can reduce or enlarge copies.

1 Prepare for copying.

See “Prepare for copying.” on page 37.

2 Select the reduction/enlargement method.

The example below assumes that you will select <Zoom (25-400%)>.

(1) Press [Settings].

(2) Use [◀] or [▶] to select Tab 1.

(3) Use [▲] or [▼] to select <Magnification>, and use [◀] or [▶] to select <Zoom (25-400%)>.
Specify the custom copy ratio for reducing or enlarging copies.

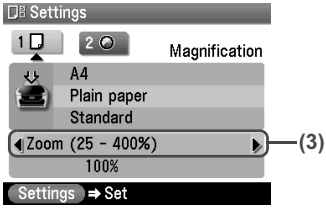

Besides <Zoom (25-400%)>, you can also choose from the following reduction/enlargement methods.

Same magnification:	Copies in the same size as an original.
Preset ratio:	Preset ratios are convenient when changing between standard page sizes, for example, when reducing A4 to A5, or enlarging B5 to A4.
Fit-to-page:	You can automatically reduce or enlarge the document to fit the size of the paper which are loaded in the Auto Sheet Feeder or Cassette.

(4) Press [▼] to move the cursor down, and use [◀] or [▶] to select the setting value.
Holding down [◀] or [▶] steps through the values faster.

Note

When you choose <Fit-to-page>, the document size may not be detected correctly depending on the document. In that case, choose <Same magnification>, <Preset ratio> or <Zoom (25-400%)>.

3 Finalize your selection.

(1) Press [Settings].
Return to the Copy standby screen.

4 Start copying.

See “Start copying.” on page 37.

Changing the Copy Settings

You can change the copy settings such as the page size, media type, or print quality.

For details on changing the copy settings and setting items, see “To Change Print Settings” on page 33.

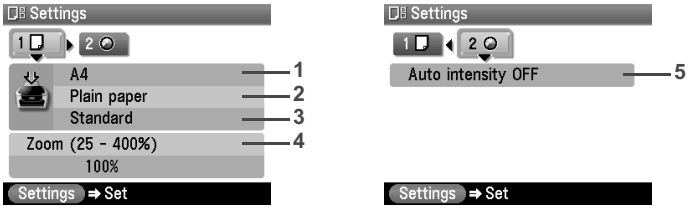

1 You can specify the page size.

2 You can specify the media type.

3 You can adjust print quality for the document to be copied.

4 You can specify the reduction/enlargement method.

See “Reducing or Enlarging a Copy” on page 38.

5 You can specify if auto intensity is performed.

Specifying <Auto intensity ON> automatically changes the icon above the intensity slide bar on the LCD to <AUTO>.

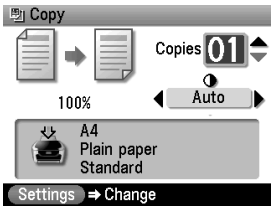

Important Even while <Auto intensity ON> is selected, you can change the intensity by pressing [◀] or [▶]. Move the cursor to the center of the slide bar to enable auto intensity again.

Using Useful Copy Functions

■ Special Copy

You can copy in various layouts.

1 Prepare for copying.

See “Prepare for copying.” on page 37.

2 Select the copy menu.

(1) Press [Menu].

(2) Use [◀] or [▶] to select <Special copy>, then press [OK].
The Special copy screen is displayed.

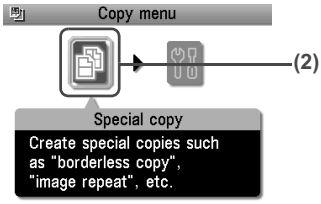

Copying onto Both Sides of the Paper (Two-sided copy)

You can copy two document pages onto the sides of a single sheet of paper.

Long-side stapling and Short-side stapling

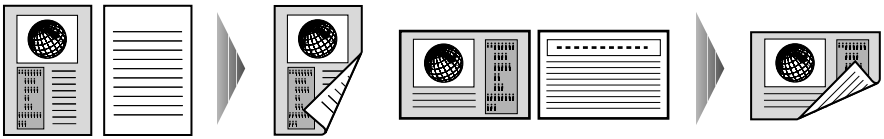

Procedure:

(1) Display the Special copy screen.
See "Special Copy" on page 39.

(2) Use [◀] or [▶] to select <Two-sided copy>, then press [OK].

(3) Use [▲] or [▼] to select the orientation of the document, then press [OK].

(4) Use [▲] or [▼] to select the binding margin, then press [OK].

(5) Follow the on-screen instructions to load the document to be printed on the front face on the Platen Glass, then press [OK].

(6) Specify the necessary items.
See "To Change Print Settings" on page 33.

(7) Press [Color] for color copying, or [Black] for black & white copying.

(8) Load the document to be printed on the back face on the Platen Glass. If you have only one document to scan, press [OK].

(9) Press [Color] or [Black]. Be sure to press the same button as you pressed in step (7).

Important

If you do not press the same button in step (7) and step (9), the machine does not start copying.

Note

- This function cannot be used in conjunction with <Fit-to-page> under <Magnification> or other copy functions.
- If you perform black & white copying for <Two-sided copy>, print intensity may be different from when performing black & white copying for single-sided copy.
- This function can only be used when the page size is set to <8.5" x 11" (215.9 x 279.4)> or <A4>.
- The media type is fixed to <Plain paper>. You cannot change this setting.

Copying Two Pages to Fit onto a Single Page (2-on-1 copy)

This feature enables you to copy two documents (A) (B) onto a single sheet (C) of paper by reducing each image.

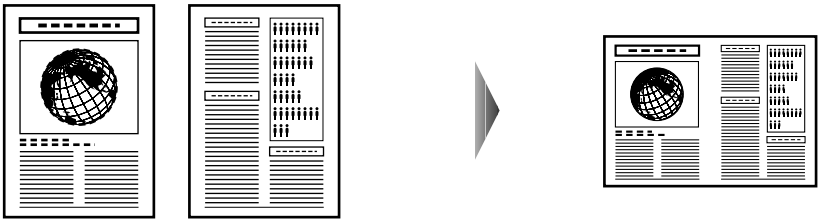

(A) (B) (C)

Procedure:

(1) Display the Special copy screen.
See "Special Copy" on page 39.

(2) Use [◀] or [▶] to select <2-on-1 copy>, then press [OK].

(3) Follow the on-screen instructions to load the document to be printed on the left side on the Platen Glass, then press [OK].

(4) Specify the necessary items.
See "To Change Print Settings" on page 33.

(5) Press [Color] for color copying, or [Black] for black & white copying.

(6) Load the document to be printed on the right side on the Platen Glass. If you have only one document to scan, press [OK].

(7) Press [Color] or [Black]. Be sure to press the same button as you pressed in step (5).

Important If you do not press the same button in step (5) and step (7), the machine does not start copying.

Note

- This function cannot be used in conjunction with other functions.
- If <Device memory is full.> appears on the LCD when scanning, set the print quality to <Standard> and try copying again.
- You can use this feature only when the page size is set to <8.5" x 11" (215.9 x 279.4)> or <A4>.
- You cannot select <Magnification>.

Copying Four Pages to Fit onto a Single Page (4-on-1 copy)

This feature enables you to copy four documents onto a single sheet of paper by reducing each image. Four types layouts can be selected.

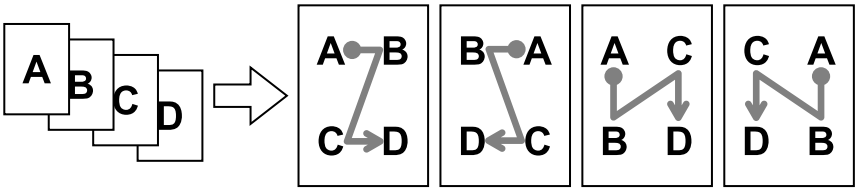

Procedure:

(1) Display the Special copy screen.
See "Special Copy" on page 39.

(2) Use [◀] or [▶] to select <4-on-1 copy> and press [OK].

(3) Use [◀] or [▶] to select the layout, then press [OK].

(4) Follow the on-screen instructions to load the first document to print on the Platen Glass, then press [OK].

(5) Specify the necessary items.
See "To Change Print Settings" on page 33.

(6) Press [Color] for color copying, or [Black] for black & white copying.

(7) Load the second document to print on the Platen Glass, and press the same button as you pressed in step (6).

(8) Repeat step (7) until you finish loading the fourth document, then press the same button as you pressed in step (6). If you have only one, two or three documents to scan, press [OK] after loading the last document.

Important

If you do not press the same button in step (6), steps (7) and (8), the machine does not start copying.

Note

- This function cannot be used in conjunction with other copy functions.
- If <Device memory is full.> appears on the LCD when scanning, set the print quality to <Standard> and try copying again.
- This function can be used only when page size is set to <8.5" x 11" (215.9 x 279.4)> or <A4>.
- You cannot specify <Magnification> for this function.

Copying without Borders (Borderless copy)

This feature enables you to copy images so that they fill the entire page without borders.

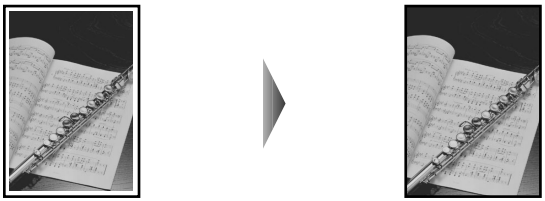

Procedure:

(1) Display the Special copy screen.
See "Special Copy" on page 39.

(2) Use [◀] or [▶] to select <Borderless copy>, then press [OK].

(3) Specify the necessary items.
See "To Change Print Settings" on page 33.

(4) Press [Color] or [Black] to start copying.

Note

- The copied image may need to be enlarged to fit onto the selected page size when making borderless copies. Some cropping may occur.
- You can use this feature only when the page size is set to <8.5" x 11" (215.9 x 279.4)>, <A4>, <4" x 6" (101.6 x 152.4)>, <5" x 7" (127 x 177.8)>, or <Credit card>.
- You can use this feature only when the paper is set to <Photo Paper Pro>, <Photo Plus Glossy>, <Matte Photo Paper>, <Glossy Photo Paper>.
- You can specify print quality to either <Standard> or <High>.
- You can select the width to be cropped from the borders of the original image according to the image size.

Repeating an Image on a Page (Image repeat)

This feature enables you to copy an image multiple times onto a single page. You can set the machine to automatically select the number of times it repeats the image, or you can specify the number.

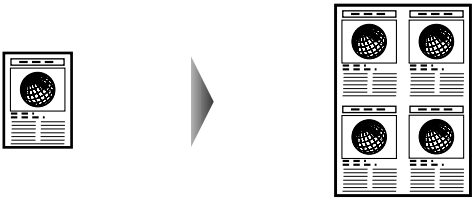

Procedure:

(1) Display the Special copy screen.
See "Special Copy" on page 39.

(2) Use [◀] or [▶] to select <Image repeat>, then press [OK].

(3) Use [▲] or [▼] to select <Auto layout> or <Manual layout>.
If you selected <Auto layout> and pressed [OK], go to step (7).
If you selected <Manual layout> and pressed [OK], go to step (4).

(4) Use [▲] or [▼] to set the vertical repeats.

(5) Press [▶] to move the cursor to the right.

(6) Use [▲] or [▼] to set the horizontal repeats, then press [OK].

(7) Specify the necessary items.
See "To Change Print Settings" on page 33.

(8) Press [Color] for color copying, or [Black] for black & white copying.

Important

- The area read from the documents depends on the enlargement/ reduction ratio.
- The size of the documents to copy should be no larger than one division of the paper. For example, if you copy four documents at the same size, their sizes must be one-fourth of the page size or smaller.

Note

- <Credit card> cannot be selected for the page size.
- <Fit-to-page> cannot be selected for <Magnification>.

Chapter 3

Printing from a Memory Card

Using the Memory Card

This section describes the compatible memory cards and how to insert and remove them.

■ Memory Cards Supported by This Machine

The following memory cards are compatible with this machine.

Memory cards that can be directly inserted into the Card Slot:	
	● **Compact Flash (CF) Card** **Supports Type I/II (3.3V)** ● **Microdrive**
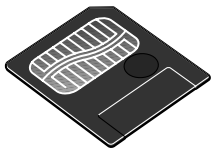	● **SmartMedia** **Supports 3.3V card only** **1MB and 2MB cards are not supported**
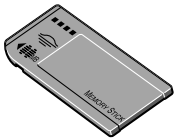	● **MEMORY STICK** ● **MEMORY STICK PRO**
	● **SD Secure Digital memory card** ● **MultiMedia Card**

Memory cards that can be inserted in the Card Slot using the adapter:	
	xD-Picture Card[*1]
	● **MEMORY STICK Duo**[*2] ● **MEMORY STICK PRO Duo**[*2]
	miniSD Card*[2]

*1 Requires purchase of a separate compact flash card adapter for xD-Picture cards.

*2 Use the special adapter provided with the card.

Important

- This machine supports image data created by DCF standard digital cameras (based on Exif), and DPOF (based on Ver 1.00).
- Image data taken or saved on memory cards that do not guarantee the action with the digital camera might be unreadable from the machine or the image data might be damaged. For details on memory cards guarantee the action with the digital camera, refer to the manuals supplied with your digital camera.
- Format the memory card with a digital camera. The memory card might not be usable with the machine if formatted on a computer.
- Images edited on a computer may not be printed correctly.
- Insert only one kind of memory card at a time.

■ Inserting the Memory Card

Note

- When <Read/write mode> is selected in Read/write attribute under Other settings by using the Operation Panel on the machine, card direct printing cannot be done. After using the Card Slot as the memory card drive of the computer, remove the memory card, then be sure to set Read/write attribute to <Read-only mode>. See “Read/write attribute” on page 94.
- When you have edited or processed the data on a memory card on a computer, be sure to print the data from the computer. If you print using the Operation Panel, the data might not be printed correctly.

1 Press [ON/OFF] to turn on the machine.

See “Turning on the Machine” on page 17.

2 Open the Card Slot Cover.

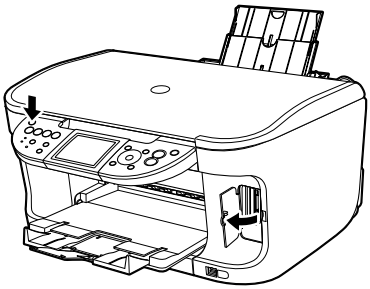

3 Insert a memory card into the Card Slot.

Card Type	Inserting Card
● **Compact Flash (CF) card** ● **Microdrive** ● **xD-Picture card***	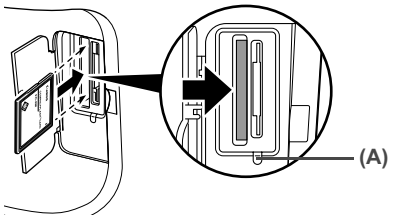 **Insert into the Card Slot on the left side.** **The Access Lamp (A) lights up.**
● **SmartMedia**	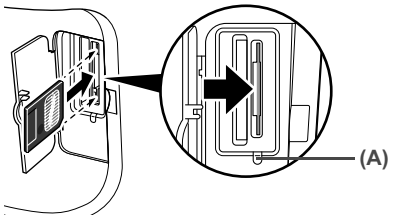 **Insert into the Card Slot on the right side.** **The Access Lamp (A) lights up.**
● **MEMORY STICK** ● **MEMORY STICK PRO** ● **MEMORY STICK Duo*** ● **MEMORY STICK PRO Duo*** ● **SD Secure Digital memory card** ● **miniSD Card*** ● **MultiMedia card**	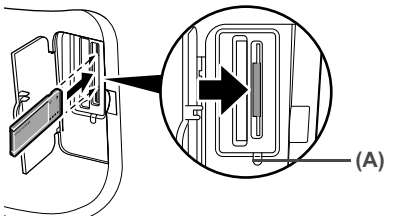 **Insert into the center part of the Card Slot on the right side.** **The Access Lamp (A) lights up.**

* Be sure to attach the memory card to the special adapter before inserting it into the Card Slot.

4 Ensure that the Access Lamp is lit after it stops flashing.

Caution

- The memory card sticks out of the Card Slot, but do not force it into the slot any further. Doing so damages the machine and the memory card.
- Check if the right side of the memory card is facing up. If you force the memory card with the wrong side up into the Card Slot, the machine and/or the memory card may be damaged.
- While the Access Lamp is flashing, do not remove the memory card or the card adapter containing the memory card, nor turn off the machine, as this might damage the data on the memory card.

■ Removing the Memory Card

Note

If you use the Card Slot as a memory card drive for your computer, removing operation from the computer is required before removing the memory card.

- When Windows is being used, right-click the removable disk icon and click [Eject]. If [Eject] is not displayed on the screen, ensure that the Access Lamp is not flashing and remove the memory card.
- When Macintosh is being used, be sure to drag the icon into the Trash.

1 Open the Card Slot Cover.

2 Ensure that the Access Lamp is not flashing, then remove the memory card.

Important

Removing the memory card or turning off the machine while the Access Lamp is flashing can damage the data stored in the memory card.

3 Close the Card Slot Cover.

Printing Photograph

Let's select a photo from the photos stored on the memory card of the digital camera, and print it.

■ Printing Photo Displayed on the LCD (Single-photo print)

Print a photo saved on the memory card.

1 Prepare for printing.

(1) Press [ON/OFF] to turn on the machine.
See "Turning on the Machine" on page 17.

(2) Load paper.
See "Loading Paper" on page 19.

(3) Ensure that the proper paper source is selected.
See "Changing the Paper Source" on page 23.

Note

Specify [Feed Switch] so that the Auto Sheet Feeder Lamp is lit when feeding paper from the Auto Sheet Feeder and the Cassette Lamp is lit when feeding paper from the Cassette.

(4) Insert a memory card into the Card Slot.
See "Inserting the Memory Card" on page 45.

2 Select the print menu.

(1) Press [MEMORY CARD].

(2) Use [◀] or [▶] to select <Single-photo print>, then press [OK].
The photo selection screen is displayed.

Note

may be displayed on the LCD while reading the photo.

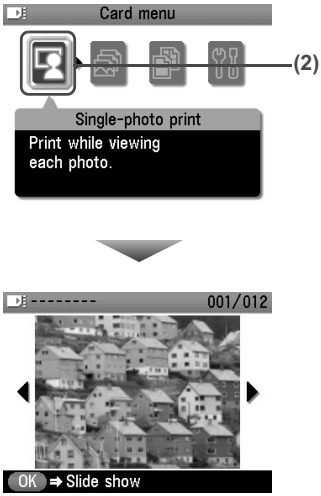

3 Select the photo you want to print.

(1) Use [◀] or [▶] to display the photo you want to print.

(2) Press [Color].
The print confirmation screen is displayed.

Note

Displaying Photos Automatically on the LCD (Slide Show)

You can automatically display photos in sequence when selecting <Single-photo print>.

- To start the slide show, press [OK] when checking photos in <Single-photo print>.
- To stop the slide show, press [Stop/Reset] during the slide show.

You can do...

- To search for photos with the shooting date (Search), see "Searching for Photos with the Shooting Date (Search)" on page 50.
- To print a specified area (Trimming), see "Printing a Specified Area (Trimming)" on page 51.

4 Start printing.

(1) Check the page size and media type.

Note

Press [Settings] to check or change the page size, media type, or other settings. See "To Change Print Settings" on page 33.

(2) Use [▲] or [▼] to specify the number of prints.

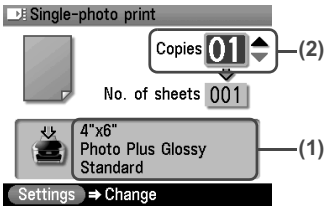

(3) Press [Color].
The machine starts printing.

Note

- To cancel printing, press [Stop/Reset].
- The printing is not started if you press [Black].

■ Specifying How Many Copies to Print for Each Photo (Multi-photo print)

You can specify the number of prints to be made for each photo.

1 Prepare for printing.

See "Prepare for printing." on page 47.

2 Select the print menu.

(1) Press [MEMORY CARD].

(2) Use [◀] or [▶] to select <Multi-photo print>, then press [OK].
The photo selection screen is displayed.

3 Specify the number of prints for each photo.

(1) Use [◀] or [▶] to select the image you want to print.

(2) Use [▲] or [▼] to specify the number of prints.

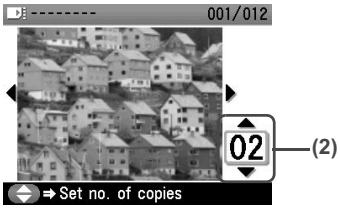

(3) Repeat from step (1) to step (2) to specify the number of prints for each photo.

(4) Press [OK].
The print confirmation screen is displayed.

Note

You can do...

- To search for photos with the shooting date (Search), see "Searching for Photos with the Shooting Date (Search)" on page 50.
- To print a specified area (Trimming), see "Printing a Specified Area (Trimming)" on page 51.

4 Start printing.

(1) Confirm the settings.
To change any of the settings, press [Settings].
See "Changing the Print Settings" on page 33.

(2) Press [Color].
The specified number of copies of each photo will be printed.

Other Useful Functions

■ Searching for Photos with the Shooting Date (Search)

When there are a lot of photos saved on the memory card, you can choose to display and print only photos shot on the specified date or within the specified range of dates.

Note

- By pressing [Search] to specify a date or date range, you can display and print the photos shot on the specified date or within the specified date range in <Single-photo print> or <Multi-photo print>, <Layout print>, <Sticker print>, or <Captured info>(<Single photo>).
- If the number of prints to make is already specified for some photos before searching with the shooting date, or if some photos are already pasted on a layout, those photos will still be selected for printing even if they were not shot on the specified date or within the specified date range.
- When using <Print all photos>, <Photo index print> or <Captured info>(<List>), only the photos shot on the specified date or within the specified date range can be printed.

1 Set the search method.

(1) Press [Search].
The Search method screen is displayed.

(2) Use [▲] or [▼] to select the search method.
If you want to specify only one date for search, select <One date only>.
If you want to specify the date range for search, select <Select date range>.

(3) Press [OK].
The date input screen is displayed.

Note

It may take a while for the date input screen to be displayed depending on the number of photos saved on the memory card.

2 Specify the date range.

- If you selected <One date only>:

(1) Use [◀] or [▶] to specify the date to search for.

(2) Go to main step 3.

- If you selected <Select date range>:

(1) Use [◀] or [▶] to specify the date of the oldest photos you want to print, then press [OK].

(2) Use [◀] or [▶] to specify the date of the most recent photos you want to print.

(3) Go to main step 3.

3 Start searching.

(1) Press [OK].
The machine starts searching and the photos within the specified date range are displayed.

Note

- The date to be specified is displayed according to the settings of <Date display>. See "Date display" on page 93.
- To exit Search mode, select <Cancel search> from the Search method screen, and then press [OK]. You can also exit Search mode by switching to any mode other than Memory card mode.

■ Printing a Specified Area (Trimming)

You can edit images displayed on the LCD by cropping them.

Note

Crop images after specifying the page size, media type, and bordered or borderless printing in the Settings (Memory Card). If you change the paper settings after cropping, the cropped area may be adjusted to match the paper, or be disabled completely.

1 Select the photo you want to crop.

(1) Use [◀] or [▶] to select the photo you want to crop.

2 Display the trimming edit screen.

(1) Press [Trimming].
The trimming edit screen is displayed.

3 Choose the area you want to print.

(1) Use [▲], [▼], [◀], [▶] to position the cropping frame, then press [Trimming].
If you do not rotate or resize the cropping frame, go to main step 4.

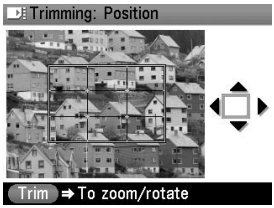

(2) Use [▲] to enlarge or [▼] to reduce the cropping frame size, respectively.

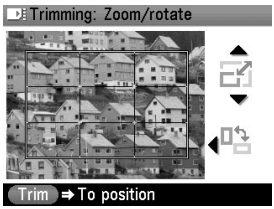

(3) Use [◀] or [▶] to switch the cropping frame between portrait and landscape.

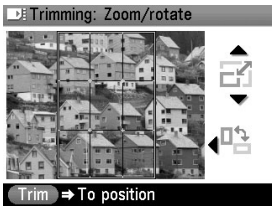

4 Finalize your selection of trimming area.

(1) Press [OK].
The area to be cropped is specified, and the original photo is displayed.

Note

- The cropped image cannot be newly saved on the memory card.
- The trimming area is displayed only for photos which have been trimmed.
- To change the trimming area once it has been set, press [Trimming] again.
- To cancel trimming while editing the trimming frame, press [Stop/Reset] while the trimming edit screen is displayed. You can also cancel trimming by switching to any mode other than Memory card mode.
- To cancel trimming after trimming has been set, press [Trimming] and then press [Stop/Reset].

■ Printing Several Photos on a Single Sheet of Paper (Layout print)

You can print the specified photos in the specified layout.

1 Prepare for printing.

See “Prepare for printing.” on page 47.

2 Select the print menu.

(1) Press [MEMORY CARD].

(2) Use [◀] or [▶] to select <Special photo print>, then press [OK].

(3) Use [◀] or [▶] to select <Layout print>, then press [OK].

3 Specify the layout.

(1) Use [◀] or [▶] to select the layout, then press [OK].
The following layouts can be selected.

Bordered:	x2/x4/x8, Half, Half (w/line)
Borderless:	x2/x4/x8, Half, Half (w/line)
Album:	Album (4/right), Album (4/left)
Mixed:	Mixed 1, Mixed 2, Mixed 3

Note

- When you select Borderless, the media type cannot be set to <Plain paper>.
- You can select Mixed 1-3 only when the page size is set to <8.5" x 11" (215.9 x 279.4)> or <A4>.

4 Specify the paste method.

(1) Use [▲] or [▼] to select the pasting method.
If you select <Paste all> then press [OK], all photos saved on the memory card are automatically pasted in the specified layout. Go to step 6.

If you select <Paste one by one> then press [OK], the photo selection screen is displayed.

5 Paste photos one by one.

(1) Use [◀] or [▶] to display the photo to be pasted, then press [OK].

Note

You can do...

- To search for photos with the shooting date (Search), see "Searching for Photos with the Shooting Date (Search)" on page 50.
- To print a specified area (Trimming), see "Printing a Specified Area (Trimming)" on page 51.

(2) Repeat step (1) to paste photos.
Press [Back] to cancel the last pasted photo.
Press [Stop/Reset] to cancel all pasted photos.

(3) Press [Color] after pasting all photos.
The print confirmation screen is displayed.

Note

Pasting cannot be done over multiple pages. When you finish pasting photos for one page, print the page.

6 Start printing.

See "Start printing." on page 48.

■ Printing on the Sticker (Sticker Print)

You can print your favorite photo with a frame on Canon Photo Stickers.

1 Prepare for printing.

See "Prepare for printing." on page 47.

Note

- When you use this function, load paper in the Auto Sheet Feeder.
- You can only load one sheet of stickers at a time in the Auto Sheet Feeder.

2 Select the print menu.

(1) Press [MEMORY CARD].

(2) Use [◀] or [▶] to select <Special photo print>, then press [OK].

(3) Use [◀] or [▶] to select <Sticker print>, then press [OK].

3 Select the layout for the sticker you want to print.

(1) Use [◀] or [▶] to select <Stickers x 16>.
You can only print in the Stickers x 16 layout though other layouts appear on the LCD.

(2) Press [OK].
The photo selection screen is displayed.

4 Select the photo you want to print.

(1) Use [◀] or [▶] to display the photo to print, then press [OK].
The frame selection screen is displayed.

Note

You can do...

- To search for photos with the shooting date (Search), see "Searching for Photos with the Shooting Date (Search)" on page 50.
- To print a specified area (Trimming), see "Printing a Specified Area (Trimming)" on page 51.

5 Select the frame.

(1) Use [◀] or [▶] to select the frame, then press [OK].
The print confirmation screen is displayed.

Note

- If you do not select a frame using [◀] or [▶], the photo is printed without any frame. When you want to print with no frame, just press [OK].
- When the photo is upside down, use [▲] or [▼] to rotate it by 180 degrees to orient it properly against the frame.
- If you want to rotate the photo by 90 degrees to fit it within the frame, use the trimming edit screen to rotate the cropping area. See "Printing a Specified Area (Trimming)" on page 51.

6 Start printing.

See "Start printing." on page 48.

Note

Settings cannot be changed when printing stickers.

■ Other Printing Functions

The following print functions are also provided under the Special photo print menu.

● <Print all photos>

You can print all photos saved on the memory card.

● <Photo index print>

You can print a list of all the photos saved on a memory card.

Note

The following print methods are available:

<Standard>:

The number of photos printed on a single sheet of paper depends on the size of the medium.

– Letter / A4: 80 photos
– 5" x 7" / 127.0 x 177.8 mm: 35 photos
– 4" x 6" / 101.6 x 152.4 mm: 24 photos
– Credit Card: 6 photos

<Contact print>:

35 mm film images are printed in its negative size as in contact print.

● <DPOF print>

If you have specified Digital Print Order Format (DPOF) settings on your digital camera, you can print using these settings.

Note

- The machine supports the following DPOF functions:

  Supported image formats:

  CIFF, Exif and JFIF

  Print Style Standard Print:

  Prints photos that were specified as “Standard Print” with DPOF

  Print Style Index Print:

  Prints an index of photos that were specified as “Index Print” with DPOF using the machine’s index printing layout (<Standard>)

  Print Photo Select:

  Prints only photos specified with DPOF (cannot be specified from the Operation Panel)

  Number of copies:

  Prints the number of copies specified with DPOF (cannot be specified from the Operation Panel)

  Functions other than the above (adding captions or titles, cropping, image rotation, etc.) are not supported.
- Prints are automatically enlarged or reduced to match the page size. Edges of the photo may be clipped off depending on the page size.
- The shot date order setting by which photos are sorted follows that of DPOF.

● <Captured info>

Information on photographs at the time of its shooting (Exif info) can be printed in the margin of Photo index print or selected individual photos.

Note

The following print methods are available:

<List>:

Prints the information in the margin of Photo index print of all photos.

<Single photo>:

Prints the information in the margin of selected individual photos.

1 Prepare for printing.

See “Prepare for printing.” on page 47.

2 Select the print menu.

(1) Press [MEMORY CARD].

(2) Use [◀] or [▶] to select <Special photo print>, then press [OK].

(3) Use [◀] or [▶] to select the print menu, then press [OK].

Note

- In <Photo index print> and <Captured info>, the print method selection screen is displayed.

  Use [▲] or [▼] to select the print method, then press [OK].
- If you selected <Single photo> for <Captured info>, the photo selection screen is displayed.

  Use [◀] or [▶] to select the photos to print, then press [OK].

You can do...

- To search for photos with the shooting date (Search), see “Searching for Photos with the Shooting Date (Search)” on page 50.
- To print a specified area (Trimming), see “Printing a Specified Area (Trimming)” on page 51.

3 Start printing.

See “Start printing.” on page 48.

Note

- For the <Print all photos>, all photos saved on the memory card will be printed.
- For the <Photo index print>, an index of all photos saved on the memory card will be printed.
- You cannot configure the number of prints when using <DPOF print>.
- For the <DPOF print>, the photos will be printed according to the DPOF information on the memory card.
- When using <Captured info>, information on photographs are printed in the margin of Photo index print or selected individual photos.

■ Printing by Using the Photo Index Sheet

With this machine, you can easily select print options as well as the photos to print using the Photo Index Sheet and by marking its appropriate circles. Simply scanning the Photo Index Sheet prints the selected photographs according to the settings you have made.

1 Prepare for printing.

(1) Press [ON/OFF] to turn on the machine.
See “Turning on the Machine” on page 17.

(2) Load A4 or Letter-size paper.
See “Loading Paper” on page 19.

Note Use white plain paper when printing a Photo Index Sheet.

(3) Ensure that the proper paper source is selected.
See “Changing the Paper Source” on page 23.

Note Specify [Feed Switch] so that the Auto Sheet Feeder Lamp is lit when feeding paper from the Auto Sheet Feeder and the Cassette Lamp is lit when feeding paper from the Cassette.

(4) Insert a memory card into the Card Slot.
See “Inserting the Memory Card” on page 45.

2 Select the Photo Index Sheet menu.

(1) Press [Photo Index Sheet].
The Photo Index Sheet menu is displayed.

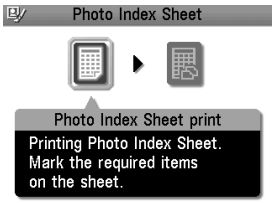

(2) Use [◀] or [▶] to select <Photo Index Sheet print>, then press [OK].

3 Select a range of image data to print.

(1) Use [◀] or [▶] to select a range of images you want to include in the Photo Index Sheet, then press [OK].

<Print all photos>: All images are printed on the Photo Index Sheet.

<Set no. of copies>: Prints by specifying the number of photos.
<Search>: Prints by specifying the date range.

- If you selected <Print all photos>:
  (2) Go to step 4.
- If you selected <Set no. of copies>:
  (2) Use [▲] or [▼] to specify the number of photos to print starting with the newest one, then press [OK].
  (3) Go to step 4.
- If you selected <Search>:
  (2) Use [◀] or [▶] to specify the oldest shot date to include in print, then press [OK].
  (3) Use [◀] or [▶] to specify the newest shot date to include in print, then press [OK].
  (4) Go to step 4.

Note It may take time to display the Search screen depending on the number of photos saved on the memory card.

4 Start printing the Photo Index Sheet.

(1) Press [Color].
Printing of the Photo Index Sheet starts.

Note When there are more than 37 images, two or more Photo Index Sheets are printed.

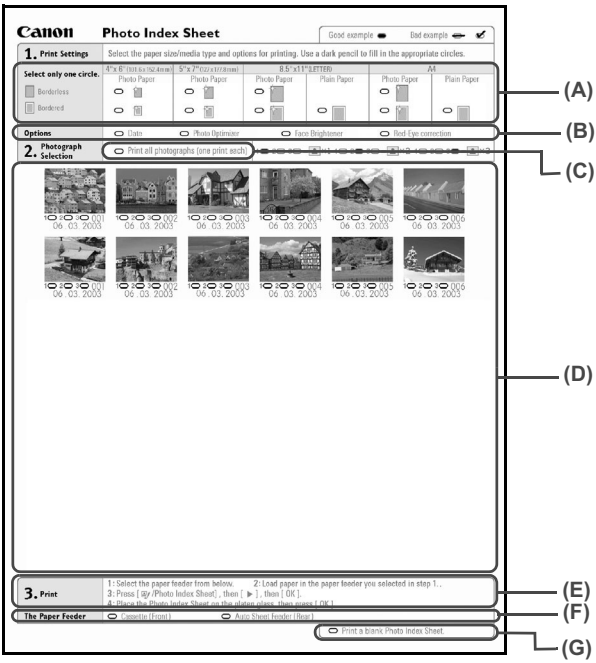

(A) Select the page size and print type.

(B) Select date printing and/or photo optimizer as necessary. See “Print Setting Items” on page 34.

(C) Mark this to print all photographs, one copy each.

*When you mark this, even if you mark the number of copies you want to print for each photograph, those marks will be disregarded, and one copy each of all photographs will be printed.

(D) Select the number of copies (fill in a circle under each photograph you want to print).

(E) Follow the procedure as described.

(F) Select the paper source.

(G) Mark this to print the same Photo Index Sheet again.

*If you mark this, all other marked settings will be disregarded.

5 Fill in the appropriate circles in the Photo Index Sheet.

Fill in the appropriate circles ( ) with a dark pencil or a black ink pen to select the photos to print and their print options.

- Good

- Bad

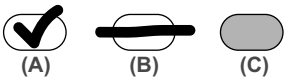

(A) Check mark

(B) Line only

(C) Too light

Important

- Be sure to fill a circle for every setting item (except options).
- If there is more than one Photo Index Sheet, fill in all the sheets.
- If the filled circles on the Photo Index Sheet are not dark enough, the machine may not read the settings.

6 Scan the Photo Index Sheet and print photos.

(1) Load the paper you selected for the Photo Index Sheet.
See “Loading Paper” on page 19.

Note

- When printing images using the Photo Index Sheet, you can select 4" x 6" (101.6 x 152.4 mm), 5" x 7" (127 x 177.8 mm), 8.5" x 11" (LETTER), or A4 for the page size.
- Load paper in the location you selected under <The Paper Feeder> on the Photo Index Sheet.

(2) Press [Photo Index Sheet].

(3) Use [◀] or [▶] to select <Scan sheet and print>, then press [OK].

(4) Place the Photo Index Sheet face-down on the Platen Glass, then press [OK].
When placing the Photo Index Sheet, place the front side down, and align the upper left corner of the sheet precisely with the arrow mark (alignment mark) at the upper left corner of the Platen Glass.

The Photo Index Sheet is scanned and the specified photos will be printed.

Important

- If <Failed to scan Photo Index Sheet.> is displayed on the LCD, press [OK]. Make sure that you have marked all the necessary circles on the sheet, and confirm its orientation and position when it is set on the Platen Glass for scanning.
- If the filled circles on the Photo Index Sheet are not marked dark enough, the machine may not read the settings.
- Do not remove the memory card while the machine is printing.
- If the Platen Glass is dirty, the machine may not read the settings. See "Cleaning the Platen Glass and Document Cover" on page 107.
- If the Photo Index Sheet is dirty, the machine may not read the settings.

Note

- To cancel printing, press [Stop/Reset].
- To continue to print photographs using subsequent Photo Index Sheets, repeat the procedure from step 5.
- If the memory card has been removed and then reinserted before printing with the Photo Index Sheet, it may take some time before printing starts.

Chapter 4

Photo Printing from Photo or Film

You can scan and print printed photos and 35 mm film into the machine. For film, both film strips (six connected frames per strip after regular developing) and slides (one frame per mounted slide) are supported. Various effects can be applied to the images before printing them.

Note Image data scanned from photo or film cannot be saved in the machine's memory or on a memory card. For how to save it on a computer, refer to the *Scan Guide*, located on your Setup CD-ROM.

Scanning a Photo

This section describes how to scan a printed photo.

You can set up to two 4"x 6"/ 101.6 x 152.4 mm sized or 5"x 7"/ 127 x 177.8 mm sized prints, or four Credit Card sized prints at a time on the Platen Glass.

1 Press [ON/OFF] to turn on the machine.

See "Turning the Machine ON and OFF" on page 17.

2 Select the type of original to scan.

(1) Press [PHOTO/FILM].

(2) Use [◀] or [▶] to select <Print from photo>, then press [OK].
The photo placement guidance screen is displayed.

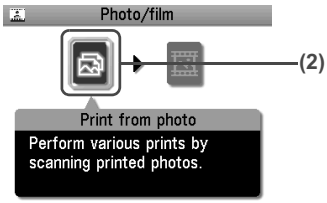

3 Load the photos on the Platen Glass.

(1) Lift the Document Cover.

(2) Load the photos on the Platen Glass.
Place the photos face down on the Platen Glass as follows.

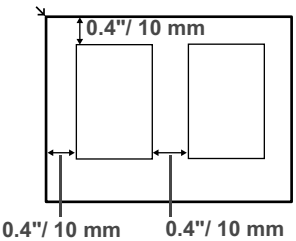

4"x 6"/ 101.6 x 152.4 mm or 5"x 7"/ 127 x 177.8 mm sized originals

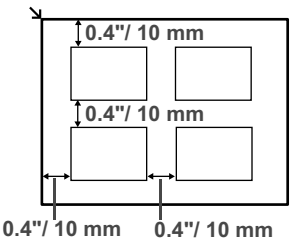

Credit Card-sized originals

Note

- Place the photograph(s) at least 0.4" / 10 mm away from and in square with the edges of the Platen Glass.
- The Skew Correction function automatically compensates for photographs placed at a slant of up to approximately 10 degrees. If the slant is too large and the photograph fails to scan in, will be displayed on the preview screen. Reset the photos, and scan them again.
- When setting two or more photographs at the same time, place them at least 0.4" / 10 mm apart from each other. If photographs are placed closer, they may be scanned as a single image.
- Slanted photographs with a long edge of 7.1" / 180 mm or more cannot be corrected.
- Photographs smaller than approx. 1" / 25 mm square will not be scanned properly.
- The types of photographs listed below may not be scanned properly.
  - Non-rectangular or irregular shaped (such as cut out photos)
  - Photographs that are entirely white
- The borders of bordered photographs may not be scanned properly. Perform trimming if necessary.

4 Slowly close the Document Cover and press [OK].

The photograph is scanned.

Note

- The photo or film is rescanned before printing starts. Do not open the Document Cover or remove the photo or film from the Platen Glass until printing is complete.
- Press [PHOTO/FILM] when loading the other photos. If <Do you want to clear the scanned photo?> appears on the LCD, select <Yes>, press [OK] to delete the previous image data, then go to main step 2.

Scanning a Film

This section describes how to scan 35 mm film strips and slides. Also mount film in the film guide in the same way as that of scanning with the machine when scanning films from your computer.

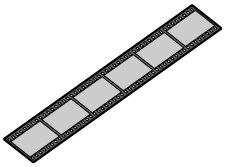

35 mm film strip

35 mm slide

1 Press [ON/OFF] to turn on the machine.

See “Turning the Machine ON and OFF” on page 17.

2 Select the type of original to scan.

(1) Press [PHOTO/FILM].

(2) Use [◀] or [▶] to select <Print from film>, then press [OK].
The film placement guidance screen is displayed.

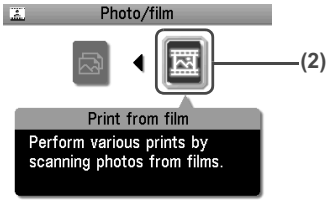

3 Select the type of film to scan.

(1) Use [◀] or [▶] to select the type of film to scan.
The following type of film can be selected.
Color negative film, Black & white negative film, Color positive film, and Mount (for slides)

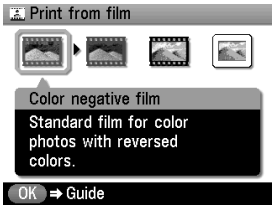

(2) Press [OK].
The procedure to set the film is displayed.
Follow the screen to load the film. Press [OK] to move to the next display.

4 Remove the film guide.

(1) Remove the FAU Protective Sheet from the Document Cover.

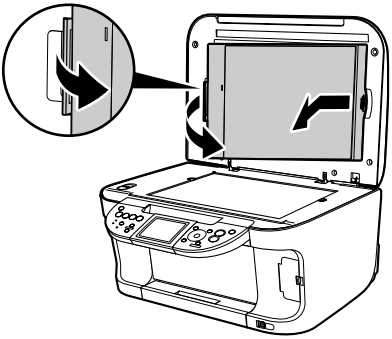

(2) Remove both the film guides for film strip or slides from the rear of the FAU Protective Sheet.

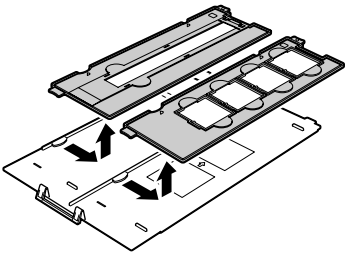

5 Mount film in the appropriate film guide as described below.

- **Mounting a 35 mm Film Strip:**

(1) On the film guide, open the film holder.
Gently squeeze in the edges (A) of the film holder to release it (B).

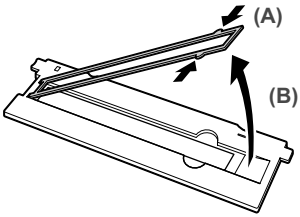

(2) Mount the film in the film guide with the front side (the side showing the correct image) face down, the frame order running from left to right and with the tip of the film set under the tabs of the film guide. Position the film in the film guide so that between the frames aligns with the white line mark of the film guide.

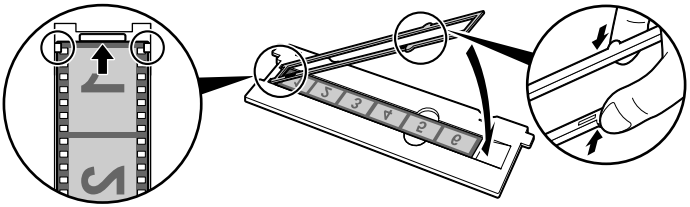

(3) Close the film holder completely with squeezing it inward while pressing.

Note

- Ensure that all the tabs on its outer edges fit into the slots in the film guide when closing the film holder. If the film holder is floating, press the whole downward.
- If the film holder will not close properly, reposition the film so that its perforations are set properly in the film guide slots, and try again.

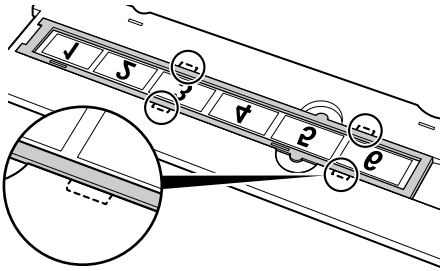

(4) With the front side of the film (the side showing the correct image) face down, align the film guide with the indentations on the right and left sides of the Platen Glass.

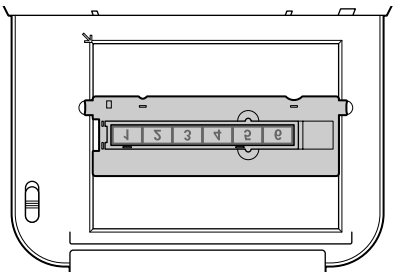

Note

- When placing film strips that are shorter than the film guide, part of an image near the open area may appear pale. In this case, place black paper over the open area to shield it.
- Labels attached to areas of the film without images may be interpreted as images and be included in the scan.

● Mounting 35 mm Slides:

(1) Align the film guide with the indentations on the right and left sides of the Platen Glass.

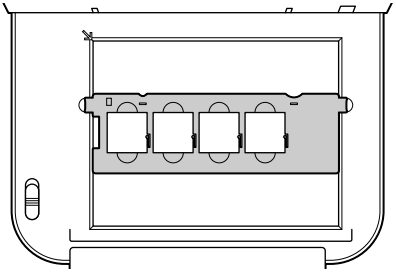

(2) Mount the slides in the film guide with the front side (the side showing the correct image) face down, the frame order running from left to right, and with the image upside down. Load the slides in the landscape orientation, making sure they are not loose in the film guide.

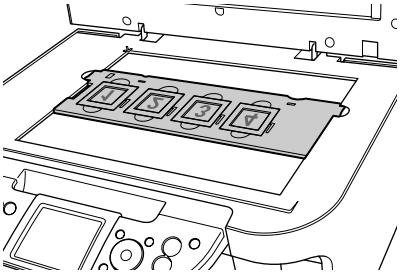

Important

The images may be unsatisfactory if the film is set beyond the reference position (A) indicated by the white line. Do not set the film beyond the reference position.

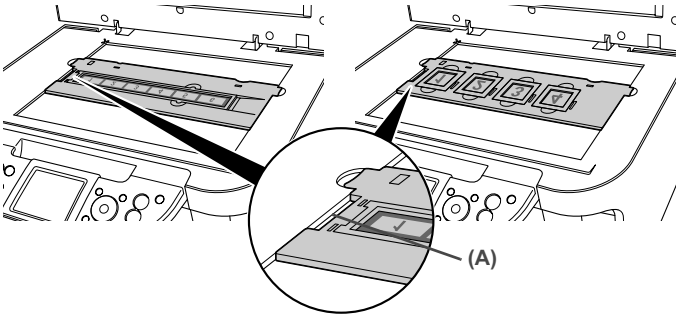

Note

- Film is scanned in the order from left to right.
- Mount the film in the film guide with the upper edge of the photograph towards you to prevent the scanned photographs from being displayed upside down on the LCD. Depending on the model or brand of your camera, the scanning order may differ from the frame order of the film.

Order to scan

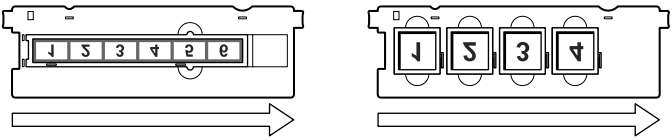

35 mm film strip **35 mm slides**

6 Slowly close the Document Cover and press [OK].

The film is scanned.

Note

- The photo or film is rescanned before printing starts. Do not open the Document Cover or remove the photo or film from the Platen Glass until printing is complete.
- If the film was not scanned properly, see “Cannot Scan Films” on page 116.
- Press [PHOTO/FILM] when loading another film. If <Do you want to clear the scanned photo?> appears on the LCD, select <Yes>, press [OK] to delete the previous image data, then go to main step 2.

Printing Photographs

Let's select a scanned photo and specify the number of prints, and print it.

■ Printing Photo Displayed on the LCD (Single-photo print)

Print a scanned photo.

1 Prepare for printing.

(1) Load paper.
See “Loading Paper” on page 19.

(2) Ensure that the proper paper source is selected.
See “Changing the Paper Source” on page 23.

Note

Specify [Feed Switch] so that the Auto Sheet Feeder Lamp is lit when feeding paper from the Auto Sheet Feeder and the Cassette Lamp is lit when feeding paper from the Cassette.

(3) Scan a photo or a film.
See “Scanning a Photo” on page 60 or “Scanning a Film” on page 62.

2 Select the print menu.

(1) Use [◀] or [▶] to select <Single-photo print>, then press [OK].
The photo selection screen is displayed.

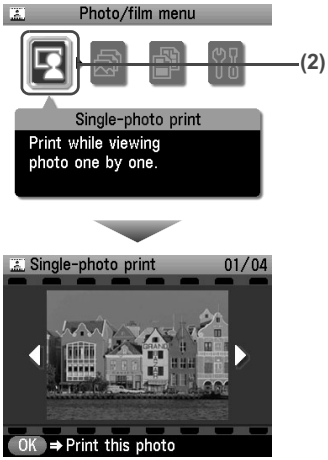

3 Select the photo you want to print.

(1) Use [◀] or [▶] to display the photo you want to print.

(2) Press [Color] or [Black].
The print confirmation screen is displayed.

Note

You can do...

- To print a specified area (Trimming), see "Printing a Specified Area (Trimming)" on page 68.

4 Start printing.

(1) Check the page size and media type.

Note

Press [Settings] to check or change the page size, media type, or other settings. See "To Change Print Settings" on page 33.

(2) Use [▲] or [▼] to specify the number of prints.

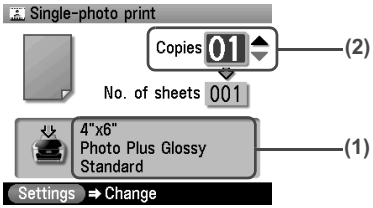

(3) Press [Color] to print in color, or [Black] to print in black & white.
The machine starts printing.

Note

To cancel printing, press [Stop/Reset].

■ Specifying How Many Copies to Print for Each Photo (Multi-photo print)

You can specify the number of prints to be made for each photo.

1 Prepare for printing.

See “Prepare for printing.” on page 66.

2 Select the print menu.

(1) Use [◀] or [▶] to select <Multi-photo print>, then press [OK].
The photo selection screen is displayed.

3 Specify the number of prints for each photo.

(1) Use [◀] or [▶] to select the image you want to print.

(2) Use [▲] or [▼] to specify the number of prints.

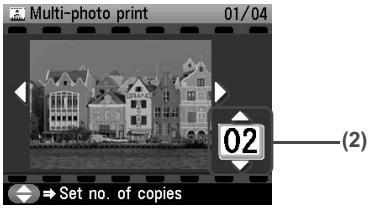

(3) Repeat from step (1) to step (2) to specify the number of prints for each photo.

(4) Press [OK].
The print confirmation screen is displayed.

Note

You can do...

- To print a specified area (Trimming), see “Printing a Specified Area (Trimming)” on page 68.

4 Start printing.

(1) Confirm the settings.
To change any of the settings, press [Settings].
See “Changing the Print Settings” on page 33.

(2) Press [Color] or [Black].
The specified number of copies of each photo will be printed.

Other Useful Functions

■ Printing a Specified Area (Trimming)

You can edit images displayed on the LCD by cropping them.

For detailed operations, see “Printing a Specified Area (Trimming)” on page 51.

■ Printing on the Sticker (Sticker print)

You can print your favorite photo on Canon Photo Stickers to create your own stickers.

1 Prepare for printing.

See “Prepare for printing.” on page 66.

Note

- When you use this function, load paper in the Auto Sheet Feeder.
- You can only load one sheet of stickers at a time in the Auto Sheet Feeder.

2 Select the print menu.

(1) Use [◀] or [▶] to select <Special photo print>, then press [OK].

(2) Use [◀] or [▶] to select <Sticker print>, then press [OK].

3 Select the layout for the sticker you want to print.

See "Select the layout for the sticker you want to print." on page 53.

Note

When printing stickers in Photo/film mode, you cannot print frames.

4 Select the photo you want to print.

(1) Use [◀] or [▶] to display the photo to print, then press [OK].
The print confirmation screen is displayed.

Note

You can do...

To print a specified area (Trimming), see "Printing a Specified Area (Trimming)" on page 51.

5 Start printing.

See "Start printing." on page 67.

■ Printing All Photos (Print all photos)

You can print all scanned photos.

1 Prepare for printing.

See "Prepare for printing." on page 66.

2 Select the print menu.

(1) Use [◀] or [▶] to select <Special photo print>, then press [OK].

(2) Use [◀] or [▶] to select <Print all photos>, then press [OK].

3 Start printing.

See "Start printing." on page 67.

Chapter 5

Printing Photographs Directly from a Compliant Device

Connecting a PictBridge compliant device such as a digital camera, camcorder or mobile phone to the machine allows you to print recorded images directly without using a computer.

Note

- PictBridge is an industry standard enabling a range of digital photo solutions, including the direct printing of photos from a digital still camera, camcorder or mobile phone* without the need to use a computer.
- It is possible to specify which images to print and various print settings from the operation panel of your camera or mobile phone.
- Canon Bubble Jet Direct allows you to print photos from a Canon Bubble Jet Direct compatible (PictBridge incompatible) digital camera or digital video camcorder without a computer, by simply connecting the digital camera or digital video camcorder to this machine.
  For details, see "Printing Photographs Directly from a Canon Bubble Jet Direct Compatible Digital Camera" on page 75.

  * Hereafter, the digital still camera, digital camcorder, and camera-equipped mobile phone compatible with PictBridge are collectively called a PictBridge compliant device.

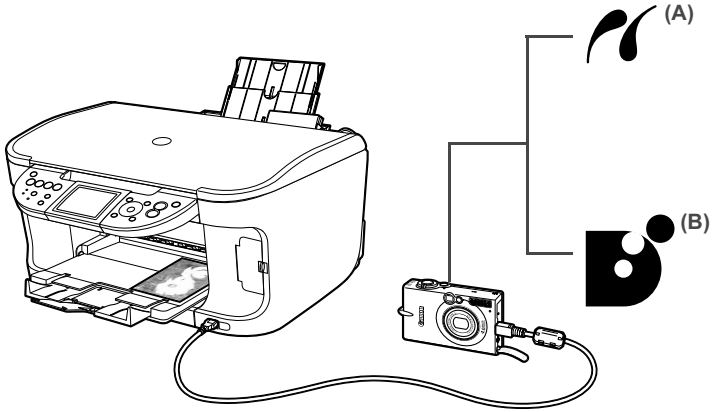

(A) This mark indicates that the product is PictBridge-compatible. See "Printing Photographs Directly from a PictBridge Compliant Device" on page 72.

(B) See "Printing Photographs Directly from a Canon Bubble Jet Direct Compatible Digital Camera" on page 75.

Connecting to a PictBridge Compliant Device

To connect a PictBridge compliant device to this machine, use the USB cable supplied with the device.

Caution

Do not connect any equipment other than PictBridge compliant devices, Canon Bubble Jet Direct compatible digital cameras or optional Bluetooth Units BU-20 to the Direct Print Port of the machine. If you do so, electric shock, fire, or damage to the device could result.

Note When printing photos with the digital device connected to the machine, it is advisable to use the AC adapter supplied with the device. If you use the device battery, be sure to charge it fully.

1 Set up the machine.

Refer to the *Easy Setup Instructions* to set up the machine and make it ready for printing.

Note The Print Head cannot be aligned using the controls of the digital device. If the Print Head alignment is not yet performed, execute automatic Print Head alignment, see "Aligning Print Head automatically" on page 106.

2 Turn on the machine.

See "Turning on the Machine" on page 17.

3 Load the paper in the machine.

See "Loading Paper" on page 19.

4 Connect the PictBridge compliant device to the machine.

Note Depending on the model or brand of your device, you may have to select a print mode compliant with PictBridge before connecting the device.

You may also have to turn on the device or select Play mode manually after connecting the device to the machine.

Perform necessary operations according to the instruction manual supplied with the PictBridge compliant device.

(1) Ensure that the device is turned off.

(2) Connect the device to the machine using the USB cable (for connection to a computer) supplied with the device.

Note Some types of the PictBridge compliant devices do not turn on automatically, when connected to the machine. If the device does not turn on automatically, turn it on manually.

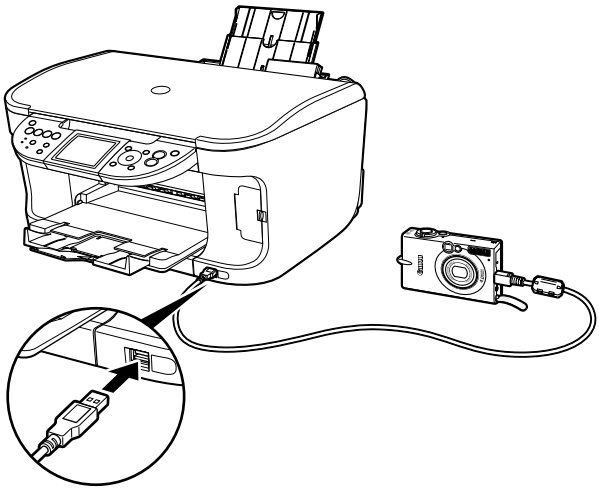

(3) Turn on and set up the device for direct printing.
Either of the following icons will display on the LCD display of the device when the machine is correctly connected.

A PictBridge compliant device.

A Canon Bubble Jet Direct compatible digital camera.

Note If neither of these icons appear, see "Cannot Print Properly from the Digital Camera" on page 128.

Printing Photographs Directly from a PictBridge Compliant Device

When operating the device, be sure to follow the instructions given in the instruction manual supplied with the PictBridge compliant device. Let's take a look at the page size, media type, layout, image optimization modes, and date/file no. printing that can be set on a PictBridge compliant device connected to the machine.

■ Checking or Changing PictBridge Print Settings from Your Camera

To change the page size or media type operate the device to select the PictBridge print setup mode and confirm or change the settings.

The settings below can be changed by pressing [Settings] in Memory card mode of this machine when a PictBridge compliant device is connected. However, changes can be made on the Settings screen (Memory Card) only when the corresponding items below are in the "Default" setting items (selections based on the machine setting) using the controls of the device.

PictBridge compliant device setting items	Machine setting on the Print Setting screen
Page size : Default	You can change the machine settings of (1), (2), and (4) on tab 1 in Memory card mode. For the setting items, see "Memory card and Photo/film modes" on page 35.
Media type : Default	
Layout : Default	
Image optimize : Default	You can change the machine settings on tab 2 in Memory card mode. For the setting items, see "Memory card and Photo/film modes" on page 35.

About the Settings Explained below

The settings explained on the following pages cannot be made on some PictBridge compliant devices. If any setting cannot be made, the machine setting is used.

* Names of settings that are displayed on Canon PictBridge compliant device are used in the description given below. Different names may be displayed on the PictBridge compliant device depending on the brand or model.

About Image Data Format for Printing

This machine accepts images* taken with a camera compatible with the Design rule for Camera File System and PNG files.

* Exif2.21 compliant

About “Page size” and “Media type”

When the “Default” (selections based on the machine setting) is selected, the machine operates based on the <Page size> and the <Media type> settings specified in the Memory card mode of the machine.

To print on Photo Paper Pro, select “Fast Photo” from “Media type” on the display of the PictBridge compliant device. Select “Photo” for Photo Paper Plus Glossy.

The following sizes and types of paper can be loaded in the machine by selecting options from “Page size” and “Media type”.

“Page size” setting	“Media type” setting	Paper loaded in machine
10 x 15 cm/4" x 6"	Photo	Photo Paper Plus Glossy
	Fast Photo	Photo Paper Pro
	Photo	Photo Paper Plus Semi-gloss
	Photo	Glossy Photo Paper
		Glossy Photo Paper "Everyday Use"
		Photo Stickers[*1]
13 x 18 cm/5" x 7"[*2]	Photo	Photo Paper Plus Glossy
A4/8.5" x 11" (Letter)[*3, *4]	Photo	Photo Paper Plus Glossy
	Fast Photo	Photo Paper Pro
	Photo	Photo Paper Plus Semi-gloss
	Photo	Glossy Photo Paper
A4	Photo	Glossy Photo Paper "Everyday Use"
5.4 x 8.6 cm/Credit Card	Photo	Glossy Photo Paper

You may not be able to purchase some Canon branded paper depending on your country.

[*1] This paper is exclusively used to print photo stickers. When printing on sticker paper, select 10 x 15 cm / 4" x 6" in “Page size”.

[*2] This size can be selected only for Canon PictBridge compatible devices (note that it cannot be selected for some models).

[*3] “Plain Paper” can be selected for “Media type” when A4 or 8.5" x 11" (Letter) is selected for “Page size”. When “Plain Paper” is selected for “Media type”, bordered printing will be performed even when “Borderless” is selected for “Layout”.

[*4] When A4 or 8.5" x 11" (Letter) is selected for “Page size”, you can print in 4-up layout.

About “Layout” and “Trimming”

For “Layout”, when the “Default” (selections based on the machine setting) is selected, the machine operates based on the print setting specified in the Memory card mode of the machine. Trimming is performed based on settings on the PictBridge compliant device.

Note

- When printing onto Photo Stickers (PS-101) (16-up), use the following settings.
  1. Select the Auto Sheet Feeder as the paper source.
     For details, see "Loading the Print Media in the Auto Sheet Feeder" on page 24.
     Always load Photo Stickers (PS-101) in the Auto Sheet Feeder.
  2. Select 10 x 15 cm / 4" x 6" for the "Page size", and "Photo" for the "Media type".
  3. Select N-up for layout, then select 16-up.
- Some PictBridge compliant devices display the Layout option; 2-up, 4-up, 9-up, and 16-up. In this case always select 16-up.
- If there are no options on the PictBridge compliant device that correspond to 2-up, 4-up, 9-up, or 16-up, printing on stickers is not possible.
- When you using Photo Stickers (PS-101), do not set "Borderless" in "Layout" settings.

About "Image optimize"

When the "Default" (selections based on the machine setting) is selected, the machine operates based on the tab 2 of the print setting specified in Memory card mode of the machine. For the setting items, see "Print Setting Items" on page 34.

If you use a Canon PictBridge compatible device, you can select "VIVID", "NR", "VIVID+NR", or "Face". (Note that these options cannot be selected for some models.)

Note

- When "VIVID" is selected, green and blue portions of photos are printed vividly.
- When "NR" (Noise Reduction) is selected, noise in blue portions, such as the sky, and dark portions is removed.
- When "VIVID+NR" is selected, functions of both "VIVID" and "NR" are performed.
- When "Face" is selected, backlit images are corrected when printed.

About "Date/File No. print"

You cannot change this setting on this machine.

Selections of this setting will be based on that of the PictBridge compliant device.

If you select an image which has had the shooting date embedded in it using a camera with the print mode, select "Off" for this function. If you select "Date", "File No.", or "Both", the date and/or file number will be printed over the embedded date.

Other Settings

If you use a Canon PictBridge-compliant device, you can use the following print settings.

(Note that these print settings cannot be used for some models.) For details, refer to your device's instruction manual.

- Shooting Info (Exif Data)

You can print shooting Info (Exif Data) on photos in list format, or in the margins of specified photos.

Select Layout, then select the item displayed with the [i] icon.

- 35mm Film Style Layout (Contact Printing Layout)

You can print selected photos or index-specified photos in 35 mm film style layout (contact printing layout).

Select Layout, then select the item displayed with the film icon.

Note

- Never disconnect the USB cable during printing.
- When disconnecting the USB cable between the PictBridge compliant device and machine, follow the instructions given in the device's instruction manual.
- Controls of the device cannot be used for the following:
  - Print quality setting
  - Machine maintenance

Printing Photographs Directly from a Canon Bubble Jet Direct Compatible Digital Camera

The following is a list of media types that can be set on the Canon Bubble Jet Direct compatible digital camera or digital video camcorder (PictBridge incompatible) along with their limitations when connected to this machine.

Note

To connect the compatible digital camera to this machine, use the USB cable for the computer connection supplied with the camera.

For details on connection, see "Connecting to a PictBridge Compliant Device" on page 70.

■ Media Types for Digital Camera

When you connect a digital camera, you can use the following media:

Digital Camera Setting	Media Type
Card #1	Photo Paper Pro 4" x 6" / 101.6 x 152.4 mm
Card #2	Photo Paper Plus Glossy 4" x 6" / 101.6 x 152.4 mm
	Photo Paper Plus Semi-gloss 4" x 6" / 101.6 x 152.4 mm
	Glossy Photo Paper 4" x 6" / 101.6 x 152.4 mm
	Glossy Photo Paper "Everyday Use" 4" x 6" /101.6 x 152.4 mm
Card #3	Photo Paper Plus Glossy 5" x 7" / 127.0 x 177.8 mm
LTR	Photo Paper Pro Letter
	Photo Paper Plus Glossy Letter
	Photo Paper Plus Semi-gloss Letter
	Glossy Photo Paper Letter
A4	Photo Paper Pro A4
	Photo Paper Plus Glossy A4
	Photo Paper Plus Semi-gloss A4
	Glossy Photo Paper A4
	Glossy Photo Paper "Everyday Use" A4

You may not be able to purchase some Canon branded paper depending on your country.

■ Printing Directly from a Digital Camera or a Digital Video Camcorder

This section describes how to print after connecting a camera to the machine.

Note

- For the digital camera operation method and troubleshooting, refer to your digital camera manual.
- For print error messages, see "Cannot Print Properly from the Digital Camera" on page 128.

1 Display the image you want to print in replay mode.

- If the camera will not change to replay mode, refer to the manual supplied with your digital camera for instructions how to.
- When the digital camera is correctly connected, the icon will display on the LCD of the digital camera.

2 Press [SET] on the digital camera.

The print setting menu is displayed on the LCD of the digital camera.

3 Select [Style] and specify the page size, bordered or borderless printing, and date printing ON or OFF.

4 Specify the number of copies, select [Print], and then press [SET] on the digital camera.

Note

- By operating the digital camera, you can make the following prints:
  - You can make a standard print from the image displayed in the single display mode or in the index display mode.
  - You can print specified numbers of images, or make an index print by editing the DPOF.

  * Images other than Exif may not be index printed.

  - For the images taken with an ExifPrint compatible digital camera, the ExifPrint function can be used.
  - If date printing is set from the digital camera, the date when the photograph was taken is to be printed (excluding the index print).
  - Images will be scaled automatically according to the image size set on the digital camera and the size of the media set on the machine.
- The digital camera does not support the following functions:
  - Print quality setting
  - Machine maintenance
- To disconnect the USB cable connecting the digital camera to the machine, follow the procedure below:
  1. Disconnect the USB cable from the machine.
  2. Turn OFF the digital camera.
  3. Disconnect the USB cable from the digital camera.
     When disconnecting the USB cable, be sure to hold the connector by its sides.

Chapter 6

Printing Photographs from a Wireless Communication Device

If you have a mobile phone with an infrared port for wireless data transmission, you can print photos through a cordless connection with the machine. If the optional Bluetooth Unit BU-20 is connected to the machine, you can also perform wireless printing from Bluetooth compatible mobile phones.

When printing photos through Infrared Communication:

- See "Setting the Page Size, Media Type, and Layout When Printing from a Mobile Phone" on page 77.
- See "Performing Infrared Communication" on page 78.

When printing photos through Bluetooth Communication:

- See "Setting the Page Size, Media Type, and Layout When Printing from a Mobile Phone" on page 77.
- See "Performing Bluetooth Communication" on page 80.

Setting the Page Size, Media Type, and Layout When Printing from a Mobile Phone

You can select the page size, media type, layout and borderless printing on the Wireless print settings screen when printing from a mobile phone through Infrared communication or Bluetooth communication. For how to print from a computer through Bluetooth communication, refer to the *Bluetooth User's Guide*.

* The initial setting is borderless printing on 4" x 6" Photo Paper Plus Glossy.

■ Displaying the Wireless Print Screen and Specifying the Settings

1 Press [ON/OFF] to turn on the machine.

See "Turning on the Machine" on page 17.

2 Display the Wireless print settings screen.

(1) Press [Menu].

(2) Use [◀] or [▶] to select <Maintenance/settings> and then press [OK].

(3) Use [◀] or [▶] to select <Device settings> and then press [OK].

(4) Use [▲] or [▼] to select <Wireless print settings> and then press [OK].
The Wireless print settings screen is displayed.

3 Confirm or change the settings.

(1) Use [▲] or [▼] to select the item to set.

(2) Use [◀] or [▶] to change the setting.

(3) Press [OK] after finishing all settings you need.
The photos in the mobile phone can be printed according to the following settings.

■ Setting Items

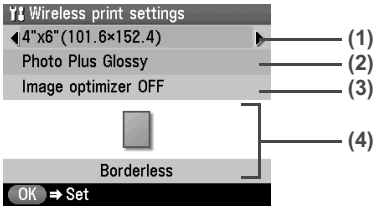

(1) Select the page size for the wireless print.

(2) Select the media type for the wireless print.

Note For information on wireless print compatible page size and type, see "Recommended Paper and Requirements" on page 19.

(3) Correct the contours and smoothes out the jaggedness.
Image optimizer ON, Image optimizer OFF

(4) Select the layout of the photos as below.

Sticker print:

Stickers x 16

Printing on paper other than sticker:

Bordered x 1, x 2, x 4, x 8

Borderless x 1, x 2, x 4, x 8

Mixed 1, 2, 3

Note

- <Mixed 1>, <Mixed 2>, or <Mixed 3> can be selected only when the page size setting is <8.5" x 11" (215.9 x 279.4)> or <A4>.
- When printing on Canon Photo Stickers, make the settings as below.

Page Size	Media Type	Layout
Sticker	Photo Paper Plus Glossy	Stickers x 16

Performing Infrared Communication

You can print photos in your mobile phone.

When printing through infrared communication, also refer to your mobile phone manual.

1 Prepare for printing.

(1) Press [ON/OFF] to turn on the machine.
See "Turning the Machine ON and OFF" on page 17.

(2) Load paper.
See "Loading Paper" on page 19.

(3) Ensure that the proper paper source is selected.
See "Changing the Paper Source" on page 23.

2 Set the print setting.

See "Setting the Page Size, Media Type, and Layout When Printing from a Mobile Phone" on page 77.

3 Start Infrared Communication.

(1) Oppose the infrared port of the mobile phone (D) to that of the machine (B) at a distance of less than 7.87" / 20 cm (C).

Note

- The effective angle of the IrDA port of the machine is about 10° from the central axis in both vertical and horizontal directions (A).
- The allowable distance of communication with the machine depends on the mobile phone you use. For this distance, refer to your mobile phone manual.

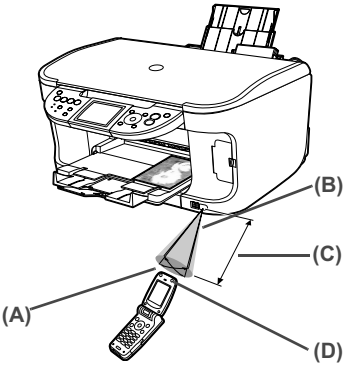

(2) Select the photo to print and send the data to the machine using the infrared communication function of the mobile phone.
Printing will start after receiving all data.

Note

- To perform printing correctly from a mobile phone through infrared communication, the following conditions should be satisfied.
  - Compatible devices: The mobile phones with an IrDA port, compatible image data transmitting through Infrared communication
  - Printable data: Shooting image with the camera of the mobile phone
- For the procedure to print from your mobile phone, refer to your mobile phone manual.
- Do not place any obstacle between the infrared ports of the machine and mobile phone. Data cannot be transmitted between them.
- During printing, be careful not to interrupt infrared communication with the machine. If it is interrupted, send the data from the mobile phone again.
- Depending on your device, the Fine print quality option may not be available due to the restriction on the infrared transfer capacity.
- We recommend printing on sticker or credit card sized paper when the print quality on other types of paper is not fine.

About transmittable data

- It does not support printing a downloaded content or photo and a photo attached to an E-mail for security reason.
- It does not support printing video files.
- Depending on the size of a photo, it may take a while for this machine to start to print after starting the infrared transfer.
- Depending on your device, it may not print data stored in a memory card.
- It automatically sets the photo quality and orientation (horizontal or landscape) according to the photo size.
- It automatically sets to the margin according to the photo size.

Performing Bluetooth Communication

This section explains the procedure to print photos through Bluetooth communication from the mobile phone with the optional Bluetooth Unit BU-20.

For the procedure to print through Bluetooth communication from the computer, refer to the *Bluetooth User's Guide*.

Note The mobile phone supporting the OPP (Object Push Profile) or BIP (Basic Image Profile) can print photos. For details of profiles, refer to your product's instruction manual.

■ Printing through Bluetooth Communication

When you print through Bluetooth communication from a mobile phone, refer to your mobile phone manual.

1 Prepare for printing.

(1) Press [ON/OFF] to turn on the machine.
See “Turning the Machine ON and OFF” on page 17.

(2) Load paper.
See “Loading Paper” on page 19.

(3) Ensure that the proper paper source is selected.
See “Changing the Paper Source” on page 23.

2 Connect the Bluetooth Unit BU-20 to the Direct Print Port.

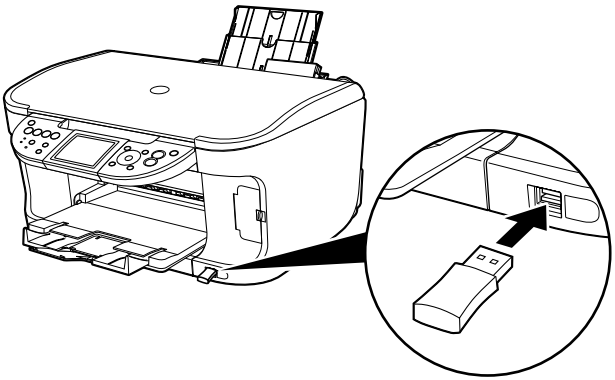

3 Set the print setting.

See “Setting the Page Size, Media Type, and Layout When Printing from a Mobile Phone” on page 77.

4 Start printing from a mobile phone.

- When you select the device name, select the initial value "Canon MP800-1."
- If you are required to enter the passkey, enter the initial value "0000."
- You can change the device name of the machine, passkey, and so on in Bluetooth settings on the machine. See “Changing the Bluetooth Settings - Bluetooth settings” on page 81.

Note

- Communication is possible up to about 32.8 ft/10m depending on the conditions below. The printing speed may change depending on the following conditions:
  - Presence of obstacles between the communication equipment and radio wave conditions.
  - Presence of magnetic fields, static electricity or electromagnetic interference.
  - Receiver sensitivity and antenna performance of the communication equipment.
- For the transmittable data, see “About transmittable data” on page 79.

■ Changing the Bluetooth Settings - Bluetooth settings

You can change the device name of the machine, passkey, and so on in Bluetooth settings.

1 Press [ON/OFF] to turn on the machine.

See “Turning the Machine ON and OFF” on page 17.

2 Connect the Bluetooth Unit BU-20 to the Direct Print Port.

3 Display the Bluetooth settings screen.

(1) Press [Menu].

(2) Use [◀] or [▶] to select <Maintenance/settings> and then press [OK].

(3) Use [◀] or [▶] to select <Device settings> and then press [OK].

(4) Use [▲] or [▼] to select <Bluetooth settings> and then press [OK].

4 Confirm or change the settings.

(1) Use [▲] or [▼] to select the item to set.

(2) Use [▲], [▼], [◀], [▶] to select the item.

(3) Press [OK] after finishing all settings you need.

■ Setting Items

<Device name>:	Select the device name of this machine displayed on the screen of the Bluetooth devices. When you set <MP800-2> the machine name on the Bluetooth device is "Canon MP800-2." The initial value is set to <MP800-1>.
<Access refusal>:	Selecting <ON> will disable search this machine from Bluetooth devices.
<Security>:	Selecting <Enable> will enable a passkey to be set or changed. Setting a passkey will prevent incorrect access from other Bluetooth devices.
<Passkey>:	You can change the passkey. The passkey refers to an identification number to be determined. It is used to prevent incorrect access from other Bluetooth devices. The initial value is set to <0000>. After you change the passkey, you are required to enter the new passkey again. Enter the new passkey to Bluetooth device.

Chapter 7

Printing from Your Computer

This section describes the basic printing procedure, taking the steps to print documents as an example.

Windows

Printing with Windows

Note

- Menu and command names may differ between application softwares, and more steps may be required. For details, refer to the documentation for each application software you use.
- The steps described in this section are for printing in Windows XP Service Pack 2 (hereafter, called Windows XP SP2).

1 Press [ON/OFF] to turn on the machine.

See “Turning on the Machine” on page 17.

2 Load the paper in the machine.

See “Loading Paper” on page 19.

3 Ensure that the proper paper source is selected.

When the Auto Sheet Feeder Lamp (A) is lit, paper is fed from the Auto Sheet Feeder.

When the Cassette Lamp (B) is lit, paper is fed from the Cassette.

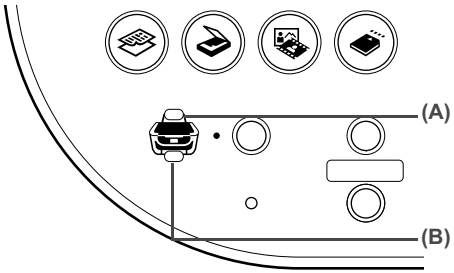

Note

Specify [Feed Switch] so that the Auto Sheet Feeder Lamp is lit when feeding paper from the Auto Sheet Feeder and the Cassette Lamp is lit when feeding paper from the Cassette.

4 Create a document or open a file to print from the application software.

5 Open the printer properties dialog box.

(1) Select [Print] from the application software’s [File] menu.
The [Print] dialog box opens.

(2) Ensure that your machine is selected.

Note

If another name of the machine is selected, click the name of the machine to use.

(3) Click [Preferences] or [Properties].
The [Main] tab of the [Printing Preferences] screen is displayed.

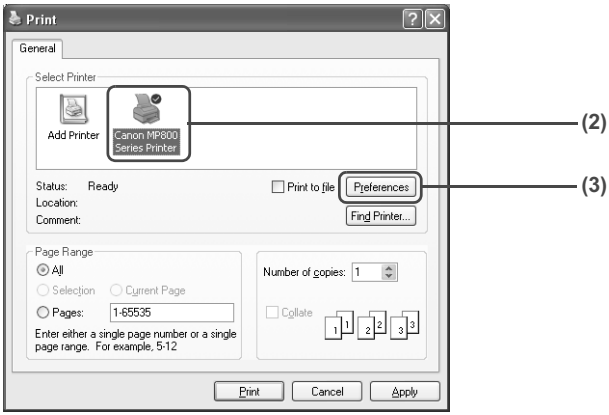

6 Specify the required settings.

(1) Click [Media Type] to select the type of media loaded in the machine.

(2) Ensure that [Paper Feed Switch] is selected from [Paper Source].

(3) Specify the print quality and other settings in [Print Quality] or [Color/Intensity].

Note For print settings, refer to the *Printer Driver Guide*.

(4) Click [OK].
The [Print] dialog box opens.

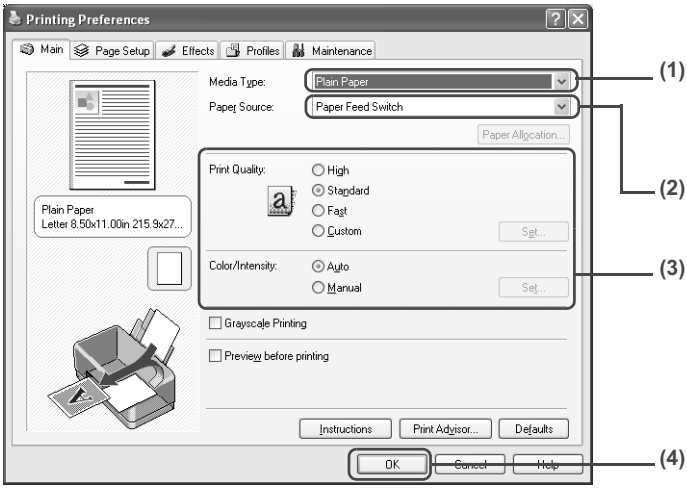

Note

- To confirm the page size, click on the [Page Setup] tab. If it does not match the document size set by the application software, select the matching page size.
- This section describes the procedure for selecting [Paper Feed Switch] from [Paper Source]. For a detailed description of the [Paper Source] settings, refer to the *Printer Driver Guide*.
- For details about other printer driver functions, click [Instructions] or [Help] to view the *Printer Driver Guide*. [Instructions] is only displayed when the *Printer Driver Guide* is installed.
- Selecting the [Preview before printing] check box displays a preview screen that allows you to confirm the selected printing effects and how your document will look when printed. Some application softwares do not have a preview function.

7 Print the document.

(1) Click [Print] or [OK].
The machine starts printing.

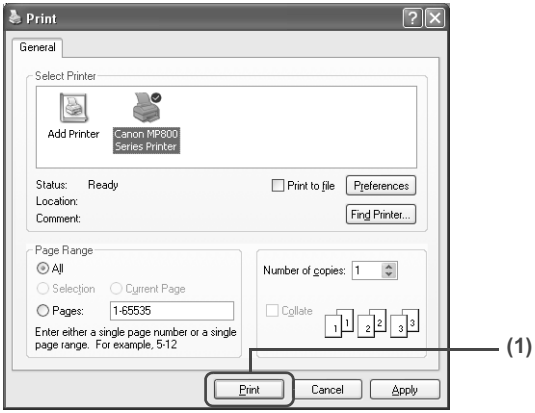

Note

- You can cancel a print job in progress by simply pressing [Stop/Reset] on the machine.
- Click [Cancel Printing] on Canon IJ Status Monitor to stop printing. To show Canon IJ Status Monitor, click [Canon MP800 Series Printer] on the taskbar.

Macintosh

Printing with Macintosh

Note

- Menu and command names may differ between application softwares, and more steps may be required. For details, refer to the documentation for each application software you use.
- The steps described in this section are for printing in Mac® OS X v.10.3.x.

1 Press [ON/OFF] to turn on the machine.

See “Turning on the Machine” on page 17.

2 Load the paper on the machine.

See “Loading Paper” on page 19.

3 Ensure that the proper paper source is selected.

When the Auto Sheet Feeder Lamp (A) is lit, paper is fed from the Auto Sheet Feeder.

When the Cassette Lamp (B) is lit, paper is fed from the Cassette.

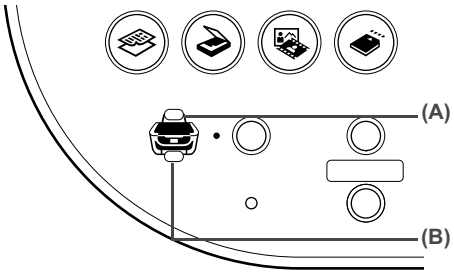

Note

Specify [Feed Switch] so that the Auto Sheet Feeder Lamp is lit when feeding paper from the Auto Sheet Feeder and the Cassette Lamp is lit when feeding paper from the Cassette.

4 Create a document or open a file to print from the application software.

5 Select the page size.

(1) Select [Page Setup] from the application software’s [File] menu.
The [Page Setup] dialog box opens.

(2) Confirm that [MP800] is selected in [Format for].

(3) Select the desired page size from [Paper Size].

(4) Click [OK].

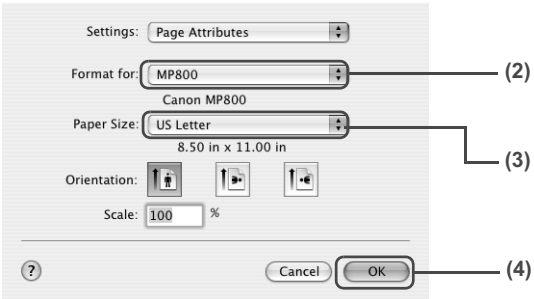

6 Specify the required settings.

(1) Select [Print] from the application software’s [File] menu.
The [Print] dialog box opens.

(2) Select [Quality & Media] from the pop-up menu.

(3) Select the desired media type from [Media Type].

(4) Ensure that [Paper Feed Switch] is selected from [Paper Source].

(5) Select the print mode appropriate to your document from [Print Mode].

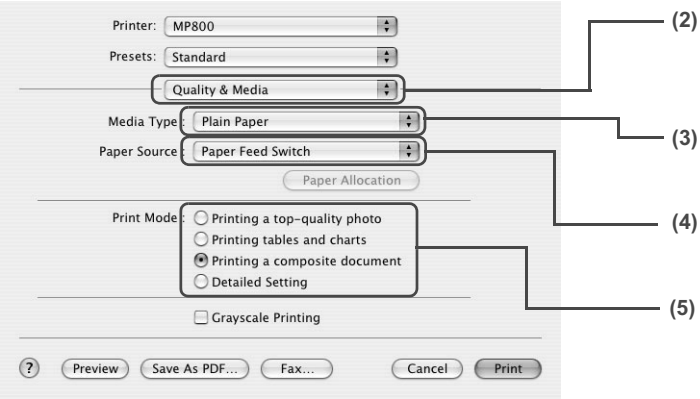

Note

- This section describes the procedure for selecting [Paper Feed Switch] from [Paper Source]. For a detailed description of the [Paper Source] settings, refer to the *Printer Driver Guide*.
- When you select the print mode appropriate to your document from [Print Mode], the document will be printed in color and at a print quality suited to the characteristics of the [Media Type] you have selected.
  - [Printing a top-quality photo]: Select when printing documents consisting mainly of photographs and graphics featuring fine color gradation.
  - [Printing tables and charts]: Select when printing documents consisting mainly of graphs and graphics (illustrations) with strong color definition.
  - [Printing a composite document]: Select when printing documents consisting mainly of text.
  - [Detailed Setting]: Select to fine-tune the [Print Quality] and [Halftoning] settings.
- For details about other printer driver functions, click ? to view the *Printer Driver Guide*. If the *Printer Driver Guide* is not installed, the *Printer Driver Guide* is not displayed even if ? is clicked.
- Clicking [Preview] displays a preview screen that allows you to confirm the selected printing effects and how your document will look when printed. Some application softwares do not have a preview function.

7 Print the document.

(1) Click [Print].
The machine starts printing.

Note

Double-clicking the name of your machine in the [Printer List] of the [Printer Setup Utility] (When using Mac OS X v.10.2, double-clicking the name of your machine in the [Printer list] of the [Print Center]) displays a dialog that prompts you to confirm the status of the print job(s). To cancel a job in progress, select the desired document, then click [Delete]. To temporarily stop a job in progress, click [Hold]. To cancel all the jobs in the list, click [Stop Jobs].

Chapter 8

Scanning Images

This section describes how to scan images.

About Scanning Images

You can scan images from the machine to a computer without printing them and save them in popular file formats, such as JPEG, Tiff, Bitmap. Scanned data saved on your computer can be processed using image processing software. Furthermore, you can use the OCR (Optical Character Recognition) software to convert scanned paper documents to text data.

■ Before Scanning

Before scanning images, confirm the following:

- Are the necessary software (MP Drivers and MP Navigator) installed?

  If the software is not yet installed, refer to the *Easy Setup Instructions*.
- Does the document to be scanned meet the requirements for an original to be set on the Platen Glass?

  For details, see "Loading Documents" on page 18. For details on setting film originals, see "Scanning a Film" on page 62.
- Is the machine connected to a computer correctly?

  Confirm that the connection between the machine and the computer is physically secure.

Scanning Methods

■ Scanning Using the MP Navigator

MP Navigator enables you to scan in documents loaded on the Platen Glass and view images saved on your computer or on a memory card. Scanned documents can be previewed and be easily printed and edited according to your needs.

You can use the supplied application software to edit or print the document you have scanned.

Windows

Double-click the [MP Navigator 2.0] icon on your desktop to launch MP Navigator.

Macintosh

Select [Applications] from the [Go] menu, then double-click the [MP Navigator 2.0] icon to launch MP Navigator.

You can launch the following application software from the MP Navigator.

- Easy-PhotoPrint (Photo Printing)
- ArcSoft PhotoStudio (Photo image editing)
- ScanSoft OmniPage SE (Converting scanned document to text)*

  * This application software may not be supplied with this machine in some country.

Note

If you did a [Custom Install] and only installed the MP Driver and MP Navigator, these application softwares were not installed and thus cannot be launched. To launch any of the above application software from MP Navigator, do a [Custom Install] once again to install them.

For detailed operations of the MP Navigator, refer to the *Scan Guide*.

■ Scanning Using the Operation Panel of the Machine

You can scan documents to your computer by using the Operation Panel on the machine.

Important Do not insert or remove USB cables when scanning images with the machine connected to a computer, or when the computer is at sleep or standby mode.

● If you are using Windows XP

The program selection screen is displayed the first time you press [Color] or [Black] on the machine. Specify [MP Navigator 2.0] as the application software to use, check [Always use this program for this action], then click [OK]. From the next time, MP Navigator is automatically started.

● When using Mac OS X

For the machine to start scanning when [Color] or [Black] is pressed, you need to set MP Navigator as the starting application software in Image Capture under [Applications] of Mac OS X.

Important
- If you are using Mac OS X v.10.4, the settings below are not necessary.
- Make sure that the MP Navigator is installed and that the Macintosh is connected to the machine before starting up Image Capture.

If you are using Mac OS X v.10.3.x

Select [Applications] from the [Go] menu, then double click [Image Capture]. Click [Options] at lower left of the scanner window, select [MP Navigator 2.0] from [Application to launch when scanner button is pressed], then click [OK].

Important If you select [Preferences] from the [Image Capture] menu, click [Scanner], and mark [Use TWAIN software whenever possible], [Options] is not displayed. In this case, click [Use TWAIN software whenever possible] to uncheck the option, exit the Image Capture, then start it again.

If you are using Mac OS X v.10.2.4 or later

Select [Applications] from the [Go] menu, then double click [Image Capture]. Select [Preferences] from the [Image Capture] menu. Select [Others] from [When a scanner button is pressed, open], select [MP Navigator 2.0] from [Applications], then click [Open].

1 Press [ON/OFF] to turn on the machine.

See “Turning on the Machine” on page 17.

2 Load the document on the Platen Glass.

For details on how to load documents, see “Loading Documents” on page 18.

For details on setting film originals, see “Scanning a Film” on page 62.

3 Select the scan operation.

(1) Press [SCAN].
The scan process selection screen is displayed.

(2) Use [▲] or [▼] to select the scan operation, then press [OK].
Scan standby screen is displayed.

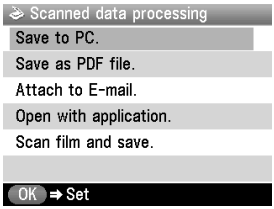

Save to PC:	The document is scanned and saved.
Save as PDF file:	The document is scanned and stored as a PDF file.
Attach to E-mail:	The document is scanned, and the image is attached to an e-mail using the e-mail application software.
Open with application:	The document is scanned and displayed on the registered application software.
Scan film and save:	The film is scanned and saved.

4 Press [Color] or [Black].

The document is scanned. The settings configured from MP Navigator apply when scanning.

Important

If with some types of original the position and size of the image is not scanned in correctly, please refer to “Selecting the Behavior of the Operation Panel with MP Navigator” in the *Scan Guide* (On-screen Manual) and change the MP Navigator [Document Type] and [Document Size] to match those of the original being scanned.

Note

The operation to be performed after scanning the document depends on the scan operation setting you have selected in step 3. For details on how to modify the operation settings, refer to the *Scan Guide*.

■ Scanning from an Application Software

You can scan an image from a TWAIN- or WIA- (Windows XP only) compliant application software and handle the scanned image in the application software. For detailed operations, refer to the *Scan Guide*.

Chapter 9

Reading from and Writing to a Memory Card

Setting up the Card Slot as the Memory Card Drive of the Computer

The Card Slot of the machine can also be used as the memory card drive of the computer.

Important When <Read/write attribute> under <Device settings> is set to <Read/write mode> using the Operation Panel of the machine, card direct printing cannot be done. After using the Card Slot as the memory card drive of the computer, remove the memory card, then be sure to set <Read/write attribute> to <Read-only mode>.

1 Display the Read/write attribute screen.

(1) Ensure that the memory card is not set.
If the memory card is set, remove it from the Card Slot. See "Inserting the Memory Card" on page 45.

(2) Press [Menu].

(3) Use [◀] or [▶] to select <Maintenance/settings> and then press [OK].

(4) Use [◀] or [▶] to select <Device settings> and then press [OK].

(5) Use [▲] or [▼] to select <Other settings> and then press [OK].

(6) Use [▲] or [▼] to select <Read/write attribute> and then press [OK].

2 Specify the Read/write attribute.

(1) Use [▲] or [▼] to specify <Read/write attribute>.

Read-only mode:	The Card Slot is used only for reading. Be sure to select this mode when printing photos from a memory card.
Read/write mode:	The Card Slot is used as the memory card drive of the computer. Photo data can be written into the memory card.

(2) Press [OK].

Note When using the Card Slot as the memory card drive of the computer, the removal operation from the computer is needed before removing the memory card from the machine.

Windows

Right-click the removable disk icon and click [Eject]. If [Eject] is not displayed on the screen, ensure that the Access Lamp is not flashing and remove the memory card.

Macintosh

Be sure to drag the icon into the Trash.

Chapter 10

Changing the Machine Settings

This section describes the procedure to change the settings in the Device settings screen, taking the steps to specify Extended copy amount as an example.

1 Press [ON/OFF] to turn on the machine.

See “Turning the Machine ON and OFF” on page 17.

2 Press [Menu].

3 Display the Device settings screen.

(1) Use [◀] or [▶] to select <Maintenance/settings>, then press [OK].
The Maintenance/settings screen is displayed.

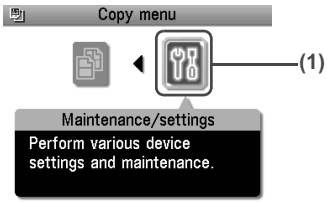

(2) Use [◀] or [▶] to select <Device settings>, then press [OK].
The Device settings screen is displayed.

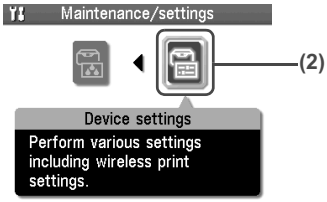

4 Select the menu.

(1) Use [▲] or [▼] to select the setting item, then press [OK].
Example: select <Print settings>.
The setting screen for the selected item is displayed.

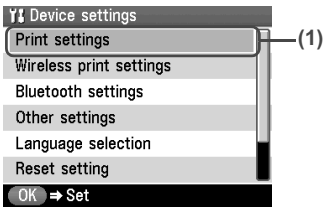

(2) Use [▲] or [▼] to select the menu, then press [OK].
Example: select <Extended copy amount>.

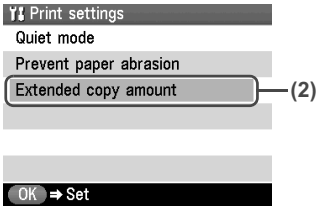

5 Change the settings.

(1) Use [▲] or [▼] to select the setting item, then press [OK].
Example: select <Small>.

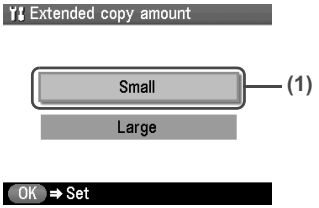

The Print Settings

■ Quiet mode

Use this function if you want to reduce the operation noise, such as when printing at night.

Important

- The printing speed may be reduced compared to when this setting is set to <OFF>.
- This function may not be so effective depending on the print quality setting.
- Furthermore, certain noise, such as when the machine is preparing for printing, is not reduced.

■ Prevent paper abrasion

Use this setting only if the print surface becomes smudged.

Important

Be sure to revert this setting to <OFF> after printing since it may result in lower print quality.

■ Extended copy amount

Selects the amount of image that extends off the paper when printing in Borderless (full).

Note

- This setting can be applied only when Copy or Photo/film mode selected.
- If you set <Large> for this function, the area of the image extending off the paper becomes larger.

Wireless Print Settings

For details, see “Setting the Page Size, Media Type, and Layout When Printing from a Mobile Phone” on page 77.

■ Page size

Specifies the page size for printing photos saved on a mobile phone.

■ Media type

Specifies the media type for printing photos saved on a mobile phone.

■ Image optimizer

Choosing <Image optimizer ON> enables you to correct and smooth the jagged contours for printing.

■ Layout print

Specifies the layout for the paper when printing photos saved on a mobile phone.

Note

<Mixed 1>, <Mixed 2>, or <Mixed 3> can be selected only when the page size is set to <8.5" x 11" (215.9 x 279.4)> or <A4>.

Bluetooth Settings

For details, see “Changing the Bluetooth Settings - Bluetooth settings” on page 81.

■ Device name

Specifies the name of this machine that is displayed on a Bluetooth compatible device.

■ Access refusal

When this is set to <ON>, the machine refuses access from a Bluetooth compatible device.

■ Security

When this is set to <Enable>, the passkey can be specified.

■ Passkey

Changes the passkey.

Other Settings

■ Date display

Changes the display order for shooting dates to be printed.

Note

- When <Print date only> or <Print date & file no.> is selected for <Date/file no.> in the tab 1 on the Settings (Memory Card) screen, the shooting date is printed in the date display order you selected. For Print settings, see “To Change Print Settings” on page 33.
- The shooting date format is as specified in the DPOF setting from DPOF printing.

Read/write attribute

Selects whether to allow data to be written onto memory cards from a computer.

Important If you set this setting to <Read/write mode>, card direct printing cannot be done. After you finish operation of the memory card dedicated drive, be sure to revert this setting to <Read-only mode>.

Power save setting

Specifies the time until Power saving is enabled.

You can select from <5 minutes>, <15 minutes>, <1 hour> or <8 hours>. The initial value is set to <1 hour>.

Adjust contrast

Use this to adjust the contrast of the LCD if it is too low or too high.

Slide show setting

Specifies the image display quality of the slide show.

Note When <Image quality: Std> is selected, images are displayed at 5-second intervals. When <Image quality: High> is selected, images are displayed at different time intervals according to their resolutions.

Language selection

Changes the language for LCD messages.

Reset setting

You can change the settings back to the default, except for the language for LCD messages and the position of the Print Head.

Save settings

Saves the settings for the Settings screen.

Load settings

Loads the settings for the Settings screen that were saved.

Chapter 11

Routine Maintenance

Replacing an Ink Tank

When ink runs out, replace the ink tank. The machine will not print if the wrong type of ink tank is used, or if it is installed in the incorrect position.

The machine uses the following ink tanks.

Black: CLI-8BK

Magenta: CLI-8M

Black: PGI-5BK

Cyan: CLI-8C

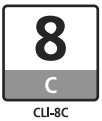

Yellow: CLI-8Y

Note

- Be sure to install the ink tanks in the correct order. The proper arrangement from the left is Black [8 BK], Black [5 PGBK], Yellow [8 Y], Magenta [8 M], Cyan [8 C].
- Should missing characters or white streaks appear despite sufficient ink levels, see “When Printing Becomes Faint or Colors are Incorrect” on page 101.

Getting the Ink Level Information

You can check the ink tank status by the ink tank lamp display. Open the Scanning Unit (Printer Cover) of the machine and check the ink tank lamp.

When the ink level is low:

The ink tank lamp flashes slowly (about three seconds). Prepare a new ink tank.

...Repeats

When ink has run out:

The ink tank lamp flashes fast (about one second). Replace it with a new ink tank.

...Repeats

If an error message is displayed on the LCD, an ink tank error has occurred and the machine cannot continue to print. See “An Error Message is Displayed on the LCD” on page 113.

Knowing When to Replace Ink Tank

It is important to identify the empty tank using the LCD and replace it.

When Low Ink is Detected: ! is displayed.

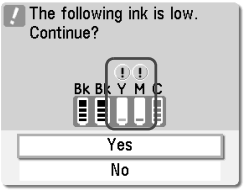

The message is displayed on the LCD when you start printing.

Obtain a new ink tank.

- To continue printing, select <Yes> and then press [OK].
- To cancel printing, select <No> and then press [OK].

When Ink has Run Out: ⊗ is displayed.

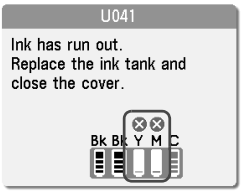

- Press [OK] to resume printing with an empty ink tank. When printing is finished, replace the ink tank immediately. If you continue printing with an empty ink tank, it will be a cause of trouble.

  * Printing does not resume if any of the ink tanks are left uninstalled. Be sure to press [OK] with all the ink tanks installed.
- Press [Stop/Reset] to cancel printing. Replace with a new ink tank.

Replacing Ink Tanks

When an ink tank runs out of ink, replace it using the following steps.

Note

- To maintain optimal print quality, use an ink tank within six months of its first use.
- Once an ink tank has been used, do not remove it from the machine and leave it out in the open. This will cause the ink tank to dry out and the machine may not operate properly if it is reinstalled.
- Color ink consumption may occur even when black-and-white or grayscale printing is specified.

  Color ink is consumed in the head cleaning and deep cleaning, which are necessary to maintain the machine's capabilities.

1 Open the Scanning Unit (Printer Cover) and the Paper Output Tray.

(1) Make sure the machine is turned on.

(2) Raise the Scanning Unit (Printer Cover) until it stops.
* The Paper Output Tray will open automatically after the Print Head Holder moves to the center.

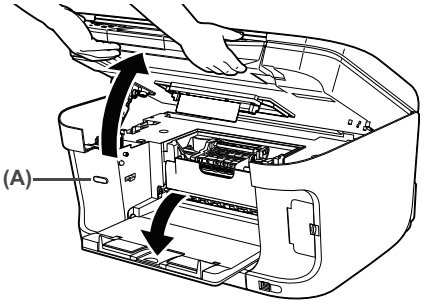

(A) Press the Open Button to open the Paper Output Tray if it does not open automatically.

Caution Do not hold the LCD.

Important If the Scanning Unit (Printer Cover) is left open for more than 10 minutes, the Print Head Holder moves to the right. Close and reopen the Scanning Unit (Printer Cover) to return the Print Head Holder to the center.

2 Open the Inner Cover.

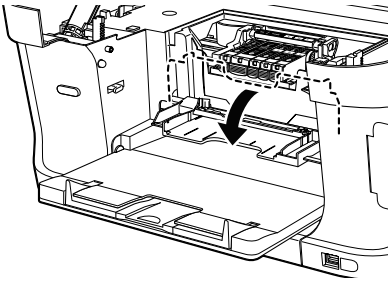

Caution
- Do not try to manually move or stop the Print Head Holder.
- Do not touch any metal parts.

3 Remove the ink tank whose lamp is flashing fast.

(1) Push the tab (A) and remove the ink tank.

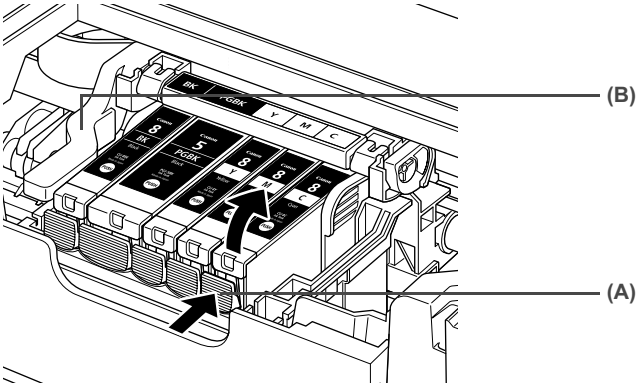

Caution Do not touch the Print Head Lock Lever (B). Remove only the ink tank.

Important

- Handle ink tanks carefully to avoid staining clothing or the surrounding area.
- Discard empty ink tanks according to the local laws and regulations regarding disposal of consumables.

Note Be sure to replace ink tanks one by one when replacing more than one ink tank.

4 Prepare a replacement tank.

(1) Remove the new ink tank from its packaging, then pull the orange tape (A) toward the arrow so that the protective film does not remain on the air hole (C). Then remove the film completely (B).

(2) Remove the orange protective cap (D) from the bottom of the ink tank and discard it. Carefully hold the protective cap when removing it to prevent the ink from staining your fingers.

Discard the cap once it is removed.

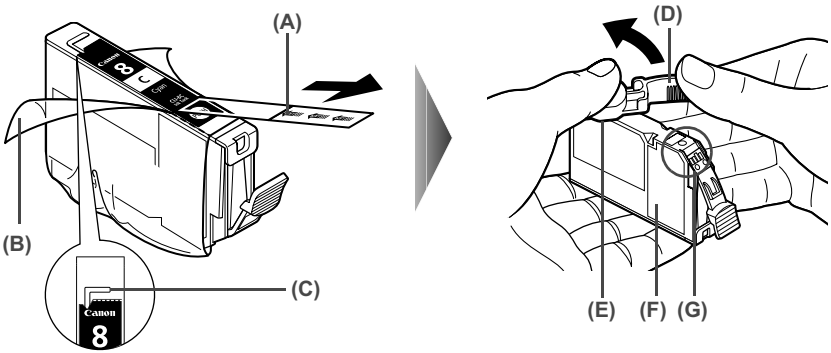

Important

- Be sure to remove the clear film from the ink tank in the exact order shown in step 5, as failure to follow this step may cause the ink to leak and stain your clothes and hands.
- Do not touch the electrical contacts (G). Doing so can cause the machine to malfunction or become unable to print.
- Do not squeeze the side of ink tanks (F) as this may cause the ink to leak out and stain your clothes and hands.
- Do not re-attach the protective cap (D) once you have removed it.
- Do not touch the open ink port (E) once the protective cap is removed, as this may prevent the ink from being ejected properly.
- Ink on the removed protective cap may stain your clothes and hands.
- Ensure that all the orange tape has been peeled off along the perforation. If there remains a part of the orange tape, ink may not be ejected correctly.

5 Install the ink tank.

(1) Install the ink tank into the Print Head.

Note Refer to the guide label (A) and insert the ink tank in the correct position.

(2) Press on the PUSH mark on the ink tank until the ink tank snaps firmly into place.

(3) Ensure that the ink tank clicks into place and then its lamp lights red (B).

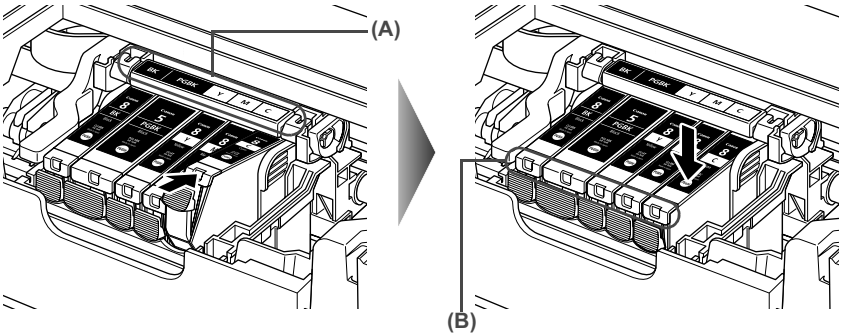

Important Make sure to install all the ink tanks to enable printing. The machine cannot be used unless all the ink tanks are installed.

6 Close the Inner Cover.

Note Ensure that the Inner Cover is closed. Printing will not occur if the Inner Cover is open.

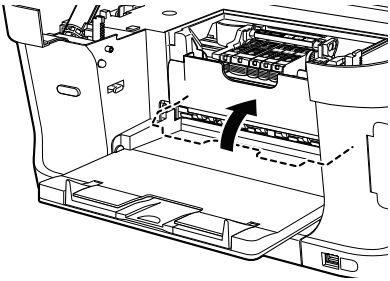

7 Slowly close the Scanning Unit (Printer Cover).

The Print Head Holder moves to the right.

Caution

- Be sure to hold the Scanning Unit (Printer Cover) firmly using both hands, and be careful not to get your fingers caught.
- Do not hold the LCD.

Note

- If <Some ink tanks are not installed in place.> is displayed on the LCD after the Scanning Unit (Printer Cover) is closed, some ink tanks may be installed in the wrong positions. Open the Scanning Unit (Printer Cover) and make sure that all the ink tanks are installed in the correct order directed on the label.
- When you start printing after replacing the ink tank, the machine executes Print Head cleaning automatically. Do not perform any other operations until the Print Head cleaning finishes.

Keeping the Best Printing Results

When unplugging the power cord

When unplugging the power cord, be sure to press [ON/OFF] first. When you press [ON/OFF], the Print Head is protected by the cap to prevent the ink from drying. When unplugging the power cord, be sure to unplug it after turning OFF the machine with [ON/OFF].

When not using the machine for a long time

When not using the machine for a long time, print or copy in both black & white and in color, or perform Print Head cleaning, about once a month to prevent degradation of the Print Head.

Numerous nozzles are installed in the Print Head for high-precision printing. Just as the uncapped tip of a ballpoint pen or marker becomes dry and unusable if not used for a long period of time, the Print Head nozzles become blocked by dried ink. Periodically printing or cleaning the Print Head can prevent this blockage.

Note

If the printed area is traced with a highlight pen or paint-stick or stained with water or sweat, ink may blur depending on the paper.

When Printing Becomes Faint or Colors are Incorrect

When printing becomes faint or colors are incorrect, even if ink remains in the ink tanks, the Print Head nozzles are probably clogged. Follow the procedures below to clean the nozzles.

If the ruled lines are shifted after running the Print Head maintenance, align the Print Head.

Note

Before printing the nozzle check pattern or cleaning the Print Head, check the following;

- Open the Scanning Unit (Printer Cover), and make sure that all the ink tanks click into place and then their lamps light red.
- If any one of the lamps is flashing, the associated ink tank is empty or running low. See "Getting the Ink Level Information" on page 95.
  If an ink tank lamp is flashing even though ink remains in that ink tank, it is inserted in the wrong position. Make sure that the correct ink tank color is inserted in each position. Open the Scanning Unit (Printer Cover) and make sure all the ink tank lamps are lit. See "Replacing an Ink Tank" on page 95.
- If the ink tank lamp is unlit, press the PUSH mark on the ink tank firmly until it clicks to fully insert it. Make sure that all packaging material is peeled off the ink tank. See "Replacing Ink Tanks" on page 96.

Step 1
See "Printing the Nozzle Check Pattern" on page 102

If missing lines or white stripes appear

Step 2
See "Print Head Cleaning" on page 104

If the problem remains after performing Print Head cleaning twice

Step 3
See "Print Head Deep Cleaning" on page 105

After Print Head cleaning, print the nozzle check pattern.

Note

If Print Head Deep cleaning does not resolve the problem, contact the Canon Customer Care Center.

If the ruled lines are shifted

Step 1
See "Aligning Print Head automatically" on page 106

■ Performing Maintenance

1 Press [ON/OFF] to turn on the machine.

See “Turning the Machine ON and OFF” on page 17.

2 Press [Menu].

3 Display the Maintenance screen.

(1) Use [◀] or [▶] to select <Maintenance/settings>, then press [OK].
The Maintenance/settings screen is displayed.

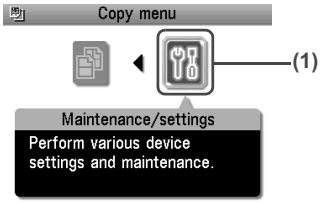

(2) Use [◀] or [▶] to select <Maintenance>, then press [OK].
The Maintenance screen is displayed.

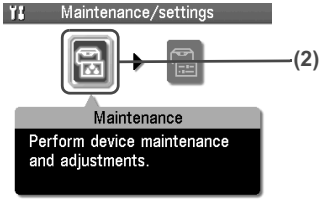

(3) Use [▲] or [▼] to select the setting item, then press [OK].
The setting screen for the selected item is displayed.

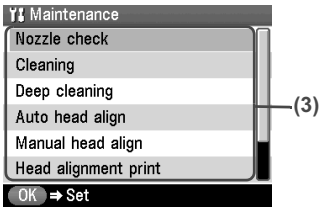

■ Printing the Nozzle Check Pattern

Print the nozzle check pattern to determine whether the ink ejects properly from the Print Head nozzles and to verify Print Head alignment. Use this function when printed results are blurred or the color is incorrect.

Note Ensure that the Inner Cover is closed.

1 Press [ON/OFF] to turn on the machine, then load a sheet of A4 or Letter-sized plain paper in the Auto Sheet Feeder or the Cassette.

See “Turning on the Machine” on page 17 and “Loading Paper” on page 19.

2 Use [Feed Switch] to select the paper source where you have loaded paper.

3 Printing the nozzle check pattern.

(1) Display the Maintenance screen.
See “Performing Maintenance” on page 102.

(2) Use [▲] or [▼] to select <Nozzle check> and then press [OK].
The pattern print confirmation screen is displayed.

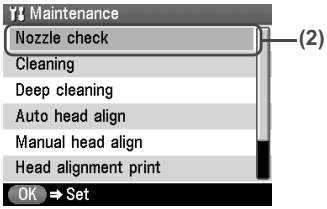

(3) Use [▲] or [▼] to select <Yes> and then press [OK].
The nozzle check pattern is printed.

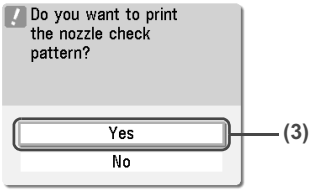

4 Examine the pattern and take the appropriate action.

See “Examining the Nozzle Check Pattern” on page 103.

■ Examining the Nozzle Check Pattern

Examine the nozzle check pattern. Perform cleaning if necessary.

Note

If the ink level is low, the nozzle check pattern is not printed correctly. Replace the relevant ink tank. (See “Replacing an Ink Tank” on page 95.)

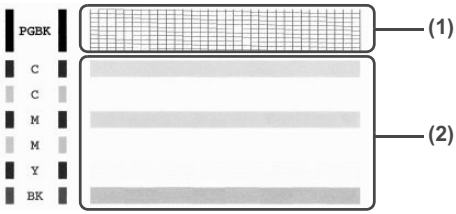

(1) Examine if any missing lines exist on this pattern.

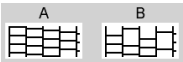

(2) Examine if any white stripes exist on this pattern.

The two different pattern sets will be displayed by turns for the pattern confirmation screen on the LCD.

● There are no white stripes./All the patterns are printed normally.

(1) Select <All A> and press [OK].
The screen returns to the Maintenance screen.

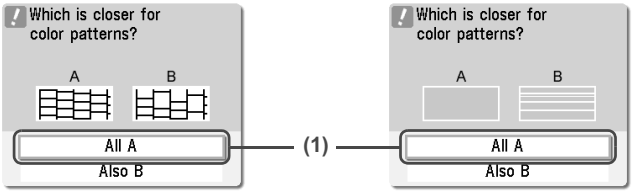

● When a white stripe exists on any of the printed patterns

(1) Select <Also B> and press [OK].
The cleaning confirmation screen is displayed.

(2) Select <Yes> and press [OK] to start Print Head cleaning.
See "Print Head Cleaning" on page 104.

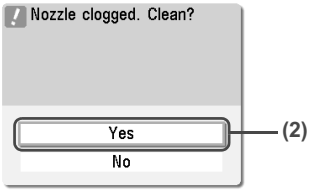

■ Print Head Cleaning

Clean the Print Head if missing lines or white stripes appear in the nozzle check pattern. This unclogs the nozzles to restore the Print Head condition. Note that cleaning the Print Head causes waste ink to be absorbed in the waste ink absorber. Cleaning the Print Head consumes ink, so perform Print Head cleaning only when necessary.

Note Ensure that the Inner Cover is closed.

1 Press [ON/OFF] to turn on the machine.

See "Turning on the Machine" on page 17.

2 Clean the Print Head.

(1) Display the Maintenance screen.
See "Performing Maintenance" on page 102.

(2) Use [▲] or [▼] to select <Cleaning> and then press [OK].
The confirmation screen is displayed.

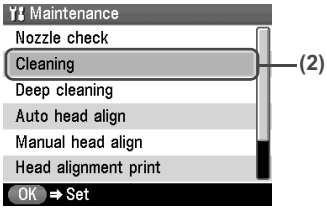

(3) Use [▲] or [▼] to select <Yes> and then press [OK].
The machine starts the Print Head cleaning.

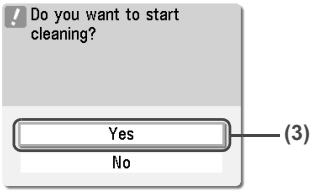

Important Do not perform any other operations until the Print Head cleaning finishes. This takes about 50 seconds.

3 Check the status of the Print Head.

After Print Head cleaning finishes, the nozzle check confirmation screen is displayed. Print the nozzle check pattern to verify that the Print Head nozzles are clean. See "Printing the Nozzle Check Pattern" on page 102.

Note If you perform cleaning and nozzle check twice and the result does not improve, then perform Deep cleaning.
See "Print Head Deep Cleaning" on page 105.

■ Print Head Deep Cleaning

If print quality does not improve by standard Print Head cleaning, try Print Head deep cleaning, which is a more powerful process. Print Head deep cleaning consumes more ink than standard print head cleaning, so perform this procedure only when necessary.

Note Ensure that the Inner Cover is closed.

1 Press [ON/OFF] to turn on the machine.

See "Turning on the Machine" on page 17.

2 Perform deep cleaning of the Print Head.

(1) Display the Maintenance screen.
See "Performing Maintenance" on page 102.

(2) Use [▲] or [▼] to select <Deep cleaning> and then press [OK].
The confirmation screen is displayed.

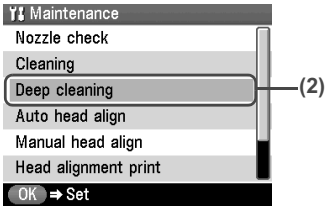

(3) Use [▲] or [▼] to select <Yes> and then press [OK].
The machine starts the Print Head deep cleaning.

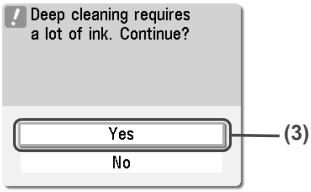

Important The process takes about 90 seconds to complete, so simply wait until the Alarm Lamp stops flashing.

3 Check the status of the Print Head.

(1) Print the nozzle check pattern to verify that the Print Head nozzles are clean.
See "Printing the Nozzle Check Pattern" on page 102.

When one specific color only does not print, see "Replacing an Ink Tank" on page 95.

(2) If the problem remains, make sure that ink remains in the ink tank. Then turn off the machine's power for at least 24 hours, and perform deep cleaning of the Print Head again.

(3) If the problem still remains, the Print Head may be damaged. Contact the Canon Customer Care Center

■ Aligning Print Head automatically

If the ruled lines are shifted after running the Print Head maintenance, align the Print Head.

There are two ways to align the Print Head, automatic or manual. First, try adjusting the Print Head automatically. If the automatic Print Head alignment does not work or if you wish, you can adjust the Print Head manually. See "Adjusting the Print Head Manually" on page 115.

Note

- The Cassette does not feed paper for aligning the Print Head. Load paper in the Auto Sheet Feeder.
- Ensure that the Inner Cover is closed.

1 Press [ON/OFF] to turn on the machine.

See "Turning on the Machine" on page 17.

2 Press the Open button to open the Paper Output Tray, and pull out the extension.

3 Execute automatic Print Head alignment.

(1) Display the Maintenance screen.
See "Performing Maintenance" on page 102.

(2) Use [▲] or [▼] to select <Auto head align> and then press [OK].
The confirmation screen is displayed.

Note

Select <Head alignment print> to print the current adjustment values.

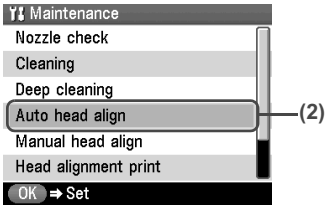

(3) Load two sheets of A4- or Letter-sized plain paper in the Auto Sheet Feeder.

(4) Use [▲] or [▼] to select <Yes> and then press [OK].
A pattern is printed and the Print Head is automatically aligned. It takes about five minutes until printing completes.

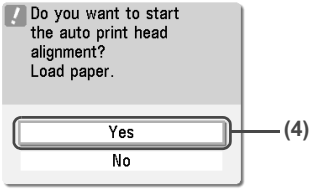

Note

- The pattern is printed in black and blue.

When Automatic Print Head Alignment Cannot Be Executed Correctly

- When automatic Print Head alignment cannot be executed correctly, the message “Auto head align has failed.” is displayed on the LCD. See “An Error Message is Displayed on the LCD” on page 113.

Cleaning Your Machine

This section describes the necessary cleaning procedures for your machine.

Caution

- Be sure to turn OFF the power and disconnect the power cord before cleaning the machine.
- Do not use tissue paper, paper towels, or similar materials for cleaning. Paper tissue powders or fine threads may remain inside the machine and cause problems such as a blocked Print Head and poor printing results. Use a soft cloth to avoid scratching the components.
- Never use volatile liquids such as thinners, benzene, acetone, or any other chemical cleaner to clean the machine; these can damage the machine’s components.

■ Cleaning the Platen Glass and Document Cover

Wipe the Platen Glass (A), the FAU Protective Sheet (white area) (B), and the FAU Lamp (C) with a clean, soft, lint-free cloth moistened with water. Then wipe with a clean, soft, dry, lint-free cloth making sure not to leave any residue, especially on the Platen Glass. If you have trouble getting the scanning area clean, wipe with diluted mild detergent (for dish washing).

Important The sheet (B) is easily damaged, so wipe it gently.

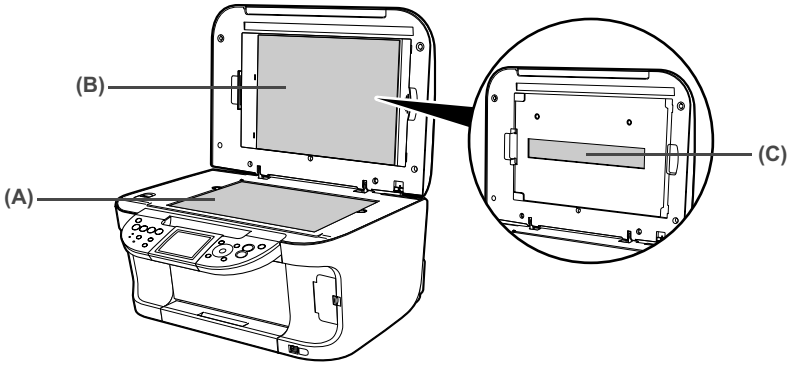

■ Cleaning the Roller (Roller Cleaning)

Clean the paper feed rollers if paper is not fed properly. Cleaning the paper feed rollers will wear the rollers, so perform this only when necessary.

Note Ensure that the Inner Cover is closed.

1 Press [ON/OFF] to turn on the machine, then remove any paper from the Auto Sheet Feeder and Cassette.

See “Turning on the Machine” on page 17.

2 Use [Feed Switch] to select the paper source to clean.

3 Clean the paper feed rollers.

(1) Display the Maintenance screen.
See “Performing Maintenance” on page 102.

(2) Use [▲] or [▼] to select <Roller cleaning>, then press [OK].
The confirmation screen is displayed.

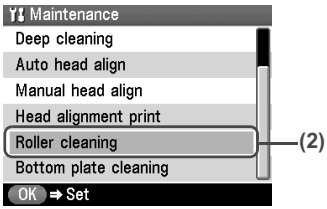

(3) Use [▲] or [▼] to select <Yes>, then press [OK].
The paper feed rollers are cleaned.

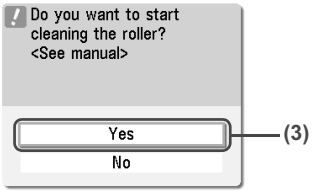

4 Repeat step 3 twice.

5 Load three or more of A4- or Letter-sized paper in the paper source you selected in step 2.

6 Repeat step 3 three times.

The sheet of paper is automatically fed in and then out of the machine.

If there are no signs of improvement after performing three times, contact the Canon Customer Care Center.

■ Cleaning the Interior of the Machine (Bottom Plate Cleaning)

This section describes how to clean the interior of the machine. If the interior of the machine becomes dirty, paper printed onto by the machine may get dirty, so we recommend performing cleaning regularly.

Note Ensure that the Inner Cover is closed.

1 Press [ON/OFF] to turn on the machine, then remove any paper from the Auto Sheet Feeder.

See “Turning on the Machine” on page 17.

2 Press the Open Button to open the Paper Output Tray, and pull out the extension.

3 Prepare a single sheet of A4- or Letter-sized plain paper. Fold it in half along the long edge. Unfold the paper, then load it in the Auto Sheet Feeder with the open side to the front.

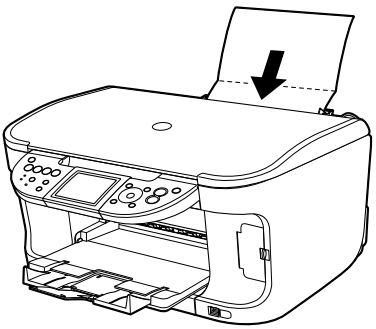

4 Perform bottom plate cleaning.

(1) Display the Maintenance screen.
See "Performing Maintenance" on page 102.

(2) Use [▲] or [▼] to select <Bottom plate cleaning>, then press [OK].
The confirmation screen is displayed.

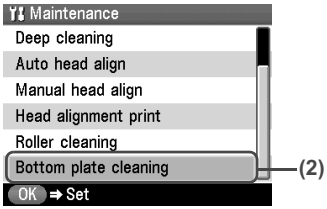

(3) Use [▲] or [▼] to select <Yes>, then press [OK].
The sheet of paper is automatically fed in and then out of the machine.

If the printed paper is smudged, clean the inside of the machine again.

If the problem remains after performing cleaning again, the protrusions inside the machine may be stained. Clean them up. See "Cleaning the Protrusions inside the Machine" on page 110.

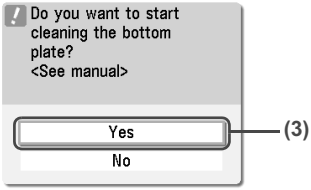

Important

- Even if the Cassette is selected as the paper source, paper will be fed from the Auto Sheet Feeder to print the pattern.
- Do not perform any other operation while the bottom plate is being cleaned.

■ Cleaning the Protrusions inside the Machine

If protrusions inside the machine are stained, wipe ink off the protrusions using a swab or the like.

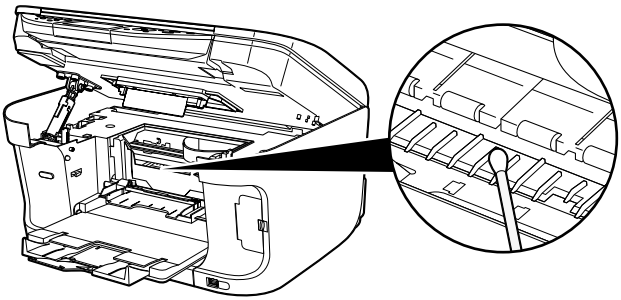

Chapter 12
Troubleshooting

This section describes troubleshooting tips for problems you may encounter when using the machine.

Note This section describes about error messages that are displayed on the LCD or troubleshooting tips for the problems of copy direct printing. If you cannot find appropriate tips for your problem, refer to the on-screen manuals.

- “An Error Message is Displayed on the LCD” on page 113
- “Cannot See the Display Properly on the LCD/Cannot See the Display on the LCD” on page 115
- “Cannot Scan Films” on page 116
  - “Cannot obtain a clean scan, colors scan incorrectly” on page 116
  - “Frames are not detected correctly” on page 116
- “Ink Does Not Come Out/Printing is Blurred/Colors are Wrong/White Streaks/Straight Lines are Misaligned/Cannot Print to End of Job” on page 117
  - “When Copying” on page 120
- “Back of Paper is Smudged/Paper Does Not Feed Properly/Printed Surface is Scratched” on page 121
  - “Paper Curls/Ink Blots” on page 125
- “Paper Jams” on page 125
- “Cannot Print Properly from a Photo Index Sheet” on page 128
- “Cannot Print Properly from the Digital Camera” on page 128
- “Cannot Print Properly through Wireless Communication” on page 130
- “Cannot Install the MP Drivers” on page 131
- “Cannot Connect to the Computer Properly” on page 133
  - “Printing Speed is Slow / USB 2.0 Hi-Speed Connection Does Not Work” on page 133

Windows

  - “When You Connect to a Computer Running Windows XP, the Screen Shows the Warning Message “This device can perform faster” or “High-SPEED USB Device Plugged into non-High-SPEED USB Hub”” on page 133
- “Problems Scanning” on page 133
  - “Scanner won’t work” on page 133
  - “ScanGear MP won’t start” on page 134
  - “Cannot display preview” on page 135
  - “Computer stops operating during scanning” on page 135
  - “Scan quality is poor (Poor image displayed on the monitor)” on page 135
  - “Parts of image missing or surrounded by extra white areas” on page 136
  - “Trouble scanning with Multi-Scan or Multi-Crop function” on page 136
  - “Slow scanning speed” on page 136

Macintosh

  - ““There is not enough memory.” message is displayed” on page 136
  - “Scanned image not displayed properly” on page 137
  - “Trouble scanning with MP Navigator” on page 137

- “Image position and size incorrect when scanning from the machine’s operation panel” on page 137
- “Cannot Scan Films” on page 138
  - “Thumbnail Display does not display correctly after previewing” on page 138
  - “Cannot obtain a clean scan, colors scan incorrectly” on page 138
  - “Image becomes too dark or too bright when cropping frame is moved, expanded or contracted” on page 138
- “An Error Message Appears on the Screen” on page 139

Windows

  - “Service Error 5100 is Displayed” on page 139
  - “Writing Error/Output Error/Communication Error” on page 139

Windows

  - “When an Error is Displayed Regarding Automatic Duplex Printing” on page 140

Macintosh

  - “Error No.: 300 is Displayed” on page 140
  - “Error No.: 1700 is Displayed” on page 141
  - “Error No.: 1851 is Displayed” on page 141
  - “Error No.: 1856 is Displayed” on page 141
  - “Error No.: 2001 is Displayed” on page 142
  - “Error No.: 2500 is Displayed” on page 142

Windows

  - “For Windows Users” on page 142

Windows

If an error occurs when the machine is connected to a computer

When an error occurs in printing such as the printer is out of paper or paper jams, a troubleshooting message is displayed automatically. Take the appropriate action described in the message.

The message may vary depending on the version of your Windows operating system.

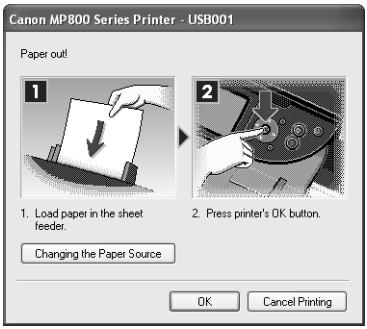

An Error Message is Displayed on the LCD

An error message is displayed on the LCD, take the corresponding countermeasure described below.

Message	Action
There are no photos in memory card.	**● There are only invalid images on the memory card.** **● Photo data edited/processed on the computer should be printed from the computer, not from the camera.**
Ink has run out. Replace the ink tank and close the cover. **U041**	**The ink has run out (The lamp on the ink tank flashes).** **Replace the ink tank, and close the Scanning Unit (Printer Cover).** **If printing is in progress and you want to continue printing, press [OK] with the ink tank installed. Then printing can continue under the ink out condition. Replace the empty ink tank immediately after the printing. The machine may be damaged if printing is continued under the ink out condition.** **Note** **If multiple ink tank lamps are flashing red, check how fast they flash. Fast flashing (at about one second interval) indicates the ink is empty. Slow flashing (at about three second interval) indicates ink is low. For details on different flashing speeds, see "Knowing When to Replace Ink Tank" on page 96.**
Print head is not installed./The type of print head is incorrect.	**Follow the directions given in the *Easy Setup Instructions* to install the Print Head.** **If the Print Head is already installed, remove the Print Head and reinstall it.** **If this error still remains, the Print Head may be damaged. Contact the Canon Customer Care Center.**
Inner cover is open. Close the inner cover and press [OK].	**If the Inner Cover is open when starting normal printing, close it before pressing [OK] on the machine.** **Do not open or close the Inner Cover when printing. This may damage the machine.**
Some ink tanks are not installed in place. **U072** **More than one ink tank of the following color is installed.** **U071**	**Possible causes are as follows:** **● Some ink tanks are not installed in place.** **● More than one ink tanks of the same color are installed.** **Confirm that the ink tanks are installed in the appropriate positions. See "Replacing an Ink Tank" on page 95.**
The waste ink absorber is almost full.	**Ink used for cleaning is absorbed in a waste ink absorber placed in the machine.** **Press [OK] to cancel the error so that you can continue printing. Once the waste ink absorber becomes completely full, printing cannot be done until the waste ink absorber is replaced.** **Canon recommends to contact the Canon Customer Care Center as soon as possible.You will need to replace a particular part of the machine.**
The following ink tank cannot be recognized. **U140** **U043**	**Possible causes are as follows:** **● The ink tank may not be installed properly (The lamp on the ink tank is off). Install the appropriate ink tank.** **● The ink tank may not be compatible with this machine (The lamp on the ink tank is off). Install the appropriate ink tank. See "Replacing an Ink Tank" on page 95.**

Message	Action
The following ink tank cannot be recognized. U150	● Ink tank errors have occurred (The lamp on the ink tank is off). Replace the ink tank. See "Replacing an Ink Tank" on page 95. ● The ink tank that is not supported by this machine is installed (The lamp on the ink tank is off). Install the appropriate ink tank. See "Replacing an Ink Tank" on page 95.
The remaining level of the following ink cannot be correctly detected. U130	An ink tank that was once empty is installed. Replace the ink tank. Printing under the situation may damage the Print Head. Canon shall not be liable for any machine malfunction or damage caused by refilled ink tanks. If you want to continue printing with the refilled ink tank installed, press and hold [Stop/Reset] for at least 5 seconds, and then release it. Using refilled ink tanks are memorized. * This operation will release the function for detecting the remaining ink level.
Incompatible device detected.	Disconnect the camera cable, and reconnect it. Depending on the model or brand of your device, you may have to select a print mode compliant with PictBridge before connecting the camera. You may also have to turn on the camera or select Play mode manually after connecting the camera to the machine. Perform necessary operations according to the instruction manual supplied with your camera. If the error is still unresolved, there is a possibility that you are using a digital camera or digital video camcorder that is not supported by this machine. Use a digital camera or digital video camcorder compatible with this machine.
Auto head align has failed.	● A4/Letter-sized paper is not loaded on the Auto Sheet Feeder. Press [OK] on the machine to clear the error, then load one sheet of A4/Letter-sized paper in the Auto Sheet Feeder. Automatic Print Head alignment cannot be performed using paper from the Cassette. For automatic Print Head alignment, always load paper in the Auto Sheet Feeder. ● Print Head nozzles are clogged. Press [OK] to resolve the error. Print the nozzle check pattern to check the status of the Print Head. ● The Paper Output Slot has been exposed to a strong light source preventing current Print Head alignment. Press [OK] to resolve the error. Align the Print Head so the Paper Output Slot will not be exposed directly to a strong light source. After carrying out the above measures, if the problem continues after aligning the Print Head again, press [OK] to resolve the error, and then perform manual Print Head alignment. For details on manual Print Head alignment, see "Adjusting the Print Head Manually" on page 115.
**** Error code	An error requiring servicing might have occurred. Turn off the machine, and unplug the power cord of the machine from the power supply. After a while, plug the power cord of the machine back in, turn on the machine, and then reconnect the camera to the machine. If the same error occurs, contact the Canon Customer Care Center.
Scanner is not operating correctly.	Contact the Canon Customer Care Center.
Release the scanner lock switch and turn the power off and back on.	The Scanner Lock Switch is not released. Slide the Scanner Lock Switch to the release position 🔓, press [ON/OFF] to turn the machine off. Then, turn the power back on. If this error still remains, contact the Canon Customer Care Center.

Note

Adjusting the Print Head Manually

If the Automatic Print Head Alignment does not work or if you wish to adjust the print heads manually, follow the procedure below.

1. Press [ON/OFF] to turn on the machine, and then load two sheets of A4/Letter-sized plain paper in the Auto Sheet Feeder or Cassette. See "Turning the Machine ON and OFF" on page 17, and "Loading Paper" on page 19.
2. Ensure that the proper paper source is selected.
3. Display the Maintenance screen.
4. Use [▲] or [▼] to select <Manual head align>, then press [OK].
5. Use [▲] or [▼] to select <Yes>, then press [OK].
   The Print Head alignment pattern is printed.
6. When <Did the patterns print correctly?> is displayed, confirm that the pattern is printed correctly, use [▲] or [▼] to select <Yes>, and then press [OK].
   The input screen for the head position adjustment value is displayed.
7. Check the printed patterns and use [◀] or [▶] to input the number of the pattern in column A that has the least noticeable streaks.
8. Press [▼] to move the cursor to column B, and then use [◀] or [▶] to input the number of the pattern that has the least noticeable streaks.
9. Repeat the procedure until you finish inputting the pattern number for column P.
10. When you have finished inputting all pattern numbers, press [OK].

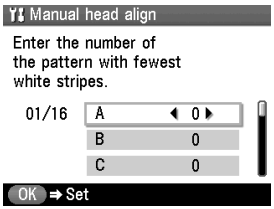

Cannot See the Display Properly on the LCD/Cannot See the Display on the LCD

Cause	Action
Cannot see the display properly on the LCD/The display on the LCD is illegible.	**Adjust the contrast of the LCD in the <Adjust contrast> menu in the <Maintenance/settings>. See "Changing the Machine Settings" on page 91.**
Cannot see the display on the LCD.	● **The machine is not powered on.** **The machine will power ON and the LCD will display a message when you connect the power cord and press [ON/OFF].** ● **The LCD may be in the screen-saver mode.** **On the Operation Panel, press a button other than [ON/OFF].**

Cannot Scan Films

Cause	Action
Film guide not correctly placed on the Platen Glass.	Insert the film in the film guide supplied for this machine and place it in the correct position on the Platen Glass.
The Document Cover is not closed.	Close the Document Cover properly.
You have not removed the FAU Protective Sheet.	Remove the FAU Protective Sheet from under the Document Cover.
The Scanner Lock Switch is not released.	Slide the Scanner Lock Switch to the release position 🔓, press [ON/OFF] to turn the machine off. Then, turn the power back on.

■ Cannot obtain a clean scan, colors scan incorrectly

Cause	Action
Dust or dirt is stuck to the Platen Glass or on the FAU Lamp.	Remove the dust or dirt from the Platen Glass or the FAU Lamp. See "Cleaning Your Machine" on page 107.
Film condition is poor due to faded colors.	Scan using <Fade restoration>. See "Memory card and Photo/film modes" on page 35. **Note** If a print out of an image does not appear satisfactory or the same as what you see on the monitor, you may need to change the print settings, or the machine itself may have engaged in problems. See "Ink Does Not Come Out/Printing is Blurred/Colors are Wrong/White Streaks/Straight Lines are Misaligned/Cannot Print to End of Job" on page 117.
If the slide mounts are white then light reflected off them will show up.	Use black mounts, or mask the slide mount with a black frame.

■ Frames are not detected correctly

Cause	Action
Film is out of position.	Reposition the film in the film guide so that the frame of the guide does not obscure them. **Note** It may not be improved even if repositioning the film depending on the film. In that case, scan from the computer. For details, refer to the *Scan Guide*.

Ink Does Not Come Out/Printing is Blurred/Colors are Wrong/White Streaks/Straight Lines are Misaligned/ Cannot Print to End of Job

Cause	Action
Ink tank is empty.	**If the ink tank lamp is flashing, ink is empty. Replace the ink tank, and close the Scanning Unit (Printer Cover).** **If printing is not finished yet, just press [OK] on the machine to continue printing in the "no ink" state.** **Replace the ink tank with a new one as soon as possible after printing has finished. The machine may be damaged if printing is continued under the ink out condition.** **Note** **If multiple ink tank lamps are flashing, check how fast they flash. Fast flashing (about one second) indicates the ink is empty. Slow flashing (about three seconds) indicates ink is low. For details on different flashing speeds, see "Getting the Ink Level Information" on page 95.**
Ink tank is not fully inserted.	**When the ink tank lamp is unlit, press the PUSH mark on the ink tank clicks into place. The ink tank lamp lights red when the ink tank is fully inserted.** **Make sure all of the orange tape is peeled off the ink tank as illustrated in (A). If any orange parts are left like in (B), remove all of the orange parts.** 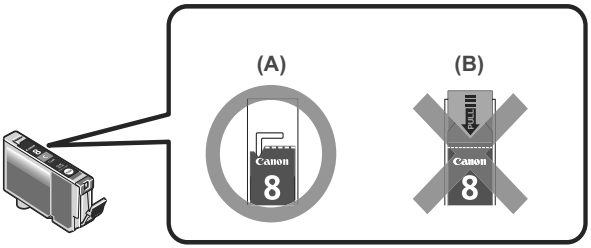 **(A) Correct** **An L shaped notch appears on the ink tank.** **(B) Incorrect** **There remains the orange tape. Peel off the tape completely along the perforation.** **If ink tank is empty, replace the ink tank.**
Incorrect media type	**When printing directly from a digital camera, on the Operation Panel, confirm that the <Media type> selected matches the paper loaded.** **When printing from a computer, check the following.** Windows **On the [Main] tab of the printer driver, ensure that the [Media Type] selected matches the paper loaded.** Macintosh **In the [Print] dialog box of the printer driver, select [Quality & Media] from the pop-up menu, and then ensure that the [Media Type] selected matches the paper loaded.**

Cause	Action
Print Head nozzles clogged or shifted	Open the Scanning Unit (Printer Cover) and check if all ink tanks lamps light red. Print the nozzle check pattern to check for uneven ink output. See "Printing the Nozzle Check Pattern" on page 102. ● Ink supply is uneven. See "Print Head Cleaning" on page 104. See "Print Head Deep Cleaning" on page 105. ● If straight lines are shifted. See "Aligning Print Head automatically" on page 106.
Print quality is not set properly.	Be sure to set the [Print Quality] setting to [High] in Windows, or [Fine] in Macintosh. Windows 1. Open the printer properties dialog box. 2. On the [Main] tab, click [High] for the [Print Quality] setting. When you cannot choose the [High] setting or when the print quality does not improve, select [Custom], click [Set] and then adjust the Quality bar for higher print quality. Macintosh 1. Open the [Print] dialog box. 2. Select [Quality & Media] from the pop-up menu and then click [Detailed Setting]. 3. Drag the [Print Quality] slide bar to the [Fine] end.
The media is loaded with the wrong side facing upwards.	Load the media with the correct side facing upwards.
The paper stack exceeds the capacity of the Auto Sheet Feeder or Cassette.	If the paper stack exceeds the paper limit mark, or exceeds the capacity of the Auto Sheet Feeder or Cassette, reduce the amount of paper. See "Recommended Paper and Requirements" on page 19.
There is some foreign matter in the Auto Sheet Feeder or Cassette.	Check and remove any foreign matter.
The paper source is not configured properly.	Make sure that the paper source in which the paper is loaded is correctly configured. See "Changing the Paper Source" on page 23.
The Paper Output Tray is closed.	Press the Open Button to open the Paper Output Tray.
Inner Cover is open.	Close Inner Cover then press [OK] on the machine.

Cause	Action
Unnecessary print jobs are queued./ Computer problems	Restart your computer. It may solve the problem. Delete an undesired print job, if there is any. Use Canon IJ Status Monitor in Windows or Printer Setup Utility (or Print Center) in Macintosh for the deletion. **Windows** 1. Open the printer properties dialog box. 2. Click the [Maintenance] tab and then [View Printer Status]. 3. Click [Display Print Queue]. 4. Select [Cancel All Documents] in the Printer menu. **Note** In Windows Me or Windows 98 Click to select an undesired document and select [Purge Print Documents] in the [Printer] menu. In Windows XP or Windows 2000 The print jobs may not be selected. 5. When the confirmation message is displayed, click [Yes]. The print job is deleted. **Macintosh** 1. Select [Applications] from the [Go] menu. 2. Double-click the [Printer Setup Utility] icon in the [Utilities] folder. When using Mac OS X v.10.2, double-click the Print Center icon. 3. Double-click the name of your machine displayed under [Name] in the [Printer List]. 4. Click to select an undesired document and click . The print job is deleted.
The machine has been printing continuously over a long period.	If so, the Print Head will overheat. To protect the Print Head, printing will stop temporarily and resume after a period of time. Interrupt printing when appropriate, turn OFF the machine, and wait at least 15 minutes. **Caution** The area around the Print Head may become extremely hot. Do not under any circumstances touch it.
You are printing high-resolution documents such as photographs or illustrations.	If you are printing high-resolution documents, processing the data will take time, and printing will appear to have stopped depending on your computer or environment. Wait until data is processed. If you are printing a document with a large printing area (with small margins) or are printing multiple sets, printing may stop to allow the ink time to dry.
Incorrect page size is selected.	Ensure that the page size setting matches the size of the paper loaded in the machine: ● Check the Page Size setting from within your application to ensure that it matches the size of the paper loaded. ● Check [Page Size] on the [Page Setup] tab in the printer properties dialog box of the printer driver (Windows) or the [Page Setup] dialog box of the printer driver (Macintosh) to ensure that it matches the size of the paper loaded.

Cause	Action
Windows The size of the print data is too large.	Check the size of the print data. For Windows XP and Windows 2000, if the size of the data is too large, part of it may be lost. When the spool format is EMF, follow the procedure below. 1. Open the printer properties dialog box. 2. On the [Page Setup] tab, click [Print Options]. 3. Select the [Reduce spool data size] check box, and click [OK]. **Note** When Reduce spool data size is set, the print quality may be degraded.
Performing automatic duplex printing	Select [Use reduced printing] in the printer driver. It may solve the problem. Windows 1. Open the printer properties dialog box. 2. Click [Print Area Setup] in the [Page Setup] tab and select [Use reduced printing]. Macintosh 1. In the [Print] dialog box, select [Duplex Printing & Margin] from the pop-up menu. 2. Select [Automatic Duplex Printing], and select [Use reduced printing] in Print Area.

■ When Copying

Cause	Action
The document is not loaded correctly.	Check that the document is loaded correctly on the Platen Glass. See "Loading Documents" on page 18.
The quality (print quality) displayed on the LCD is not suitable for the document.	Set the image quality suitable for the document. See "Copying" on page 37.
The document is not loaded with the side to be copied face down.	When loading the document on the Platen Glass, the side to be copied should be face down.
The document or photograph set on the Platen Glass was printed from your machine.	Image quality may be poor if you copy a printed document or photograph. Instead, reprint the photograph directly from the digital camera, or the document from your computer.
The Platen Glass or FAU Protective Sheet is dirty.	Clean the Platen Glass or FAU Protective Sheet. See "Cleaning the Platen Glass and Document Cover" on page 107.

Back of Paper is Smudged/Paper Does Not Feed Properly/Printed Surface is Scratched

Cause	Action
Inside of the machine is dirty.	**If the inside of the machine is dirty, printed paper may be smudged.** **Follow the steps described below to clean the inside of the machine.** **1. Press [ON/OFF] to turn on the machine, then remove any paper from the Auto Sheet Feeder and Cassette. See** **"Turning on the Machine" on page 17****.** **2. Press the Open Button to open the Paper Output Tray, and pull out the extension.** **3. Place the only one sheet of A4/Letter-size plain paper in landscape, horizontally fold it in half.** **4. Unfold the paper, and load the paper in the Auto Sheet Feeder with the inverted-V edge down.** 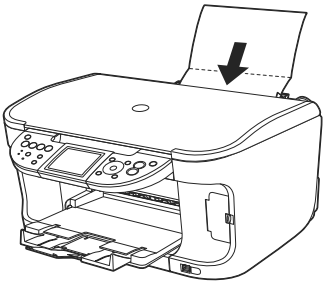 **5. Use [▲] or [▼] to select <Bottom plate cleaning> from the <Maintenance> and press [OK].** **6. Use [▲] or [▼] to select <Yes> on the Bottom plate cleaning confirmation screen and then press [OK].** **The paper that is loaded in the machine will feed through the machine and be ejected.** **If protrusions inside the machine are stained, wipe ink off the protrusions using a swab or the like.** 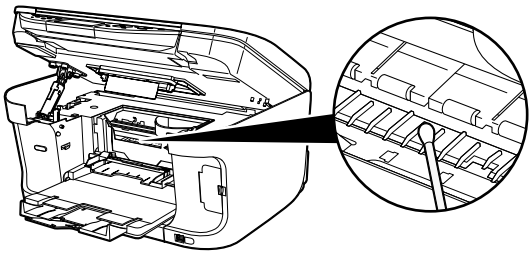 **Important** **Before cleaning, be sure to turn off the machine.**

Cause	Action
Paper Feed Roller is dirty.	**Follow the steps described below to clean the Paper Feed Rollers.** **Cleaning the Paper Feed Rollers consumes them, so perform this procedure only when necessary.** **1. Press [ON/OFF] to turn on the machine, then remove any paper from the Auto Sheet Feeder and Cassette. See** **"Turning on the Machine" on page 17****.** **2. Use [Feed Switch] to select the paper source to clean.** **3. Use [▲] or [▼] to select <Roller cleaning> from the <Maintenance> and press [OK].** **4. Use [▲] or [▼] to select <Yes> on the Roller cleaning confirmation screen and then press [OK].** **The Paper Feed Roller will rotate as it cleans.** **5. Repeat steps 3 and through 4 two times.** **6. Load three or more sheets of A4/Letter-sized plain paper lengthways in the paper source you selected in step 2.** **7. Repeat steps 3 and through 4 three times.** **The paper that is loaded in the machine will feed through the machine and be ejected.** **If there are no signs of improvement after performing three times, contact the Canon Customer Care Center.**
Inappropriate media type is used.	● **Check to see if the paper you are printing on is too thick or curled.** **See** **"Media types you cannot use" on page 21****.** ● **Note that smudging may occur at the top and bottom edges of the paper when using Borderless Printing. Ensure that the paper you are using is compatible with Borderless Printing. Refer to the *Printer Driver Guide*.**

Cause	Action
Thick paper is used.	**If you set the machine to prevent paper abrasion, the clearance between the Print Head and the loaded paper is widened.** **If the printing surface is abraded even with the media type set correctly to match the loaded paper, set the machine to prevent paper abrasion.** **When copying or printing directly, see "If printing surface abrasion is not resolved even after taking the actions above:" on page 124.** **When printing from a computer, follow the procedure below.** **Windows** **1. Open the printer properties dialog box.** **2. Click the [Maintenance] tab and then [Custom Settings].** **Important** **In Windows XP or Windows 2000** **When not logged on as a computer administrator or Administrators, you cannot open the [Custom Settings] dialog box.** **For further information on how to log on as an administrator, refer to your Windows documentation.** **3. Select the [Prevent paper abrasion] check box and click [Send].** **4. Click [OK] when the confirmation message appears.** **Macintosh** **1. Open the [Canon IJ Printer Utility] dialog box.** **2. Select [Custom Settings] from the pop-up menu.** **3. Select [Prevent paper abrasion].** **Note** **Clear the [Prevent paper abrasion] check box once printing is complete.** **When [Prevent paper abrasion] is selected in the printer properties dialog box (Windows) or selected from [Custom Settings] in the Canon IJ Printer Utility dialog box (Macintosh), the setting is also applied under direct printing with the digital camera.**
Paper is curled.	**If all four corners or the printing surface of the paper is curled, the paper may become dirty or the paper may not feed properly. Use the paper after correcting paper curl as follows.** **1. Face up the printing surface (A), and cover it with a non-printing regular paper to avoid staining or scratching the surface.** **2. Roll up the paper in a direction opposite to paper curl as the figure below.** 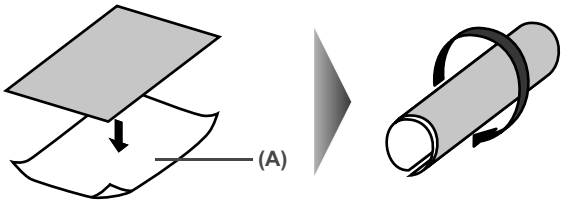 **3. Check the printing paper if paper is corrected within approximately 2 to 5mm / 0.08 to 0.2 in (B).** 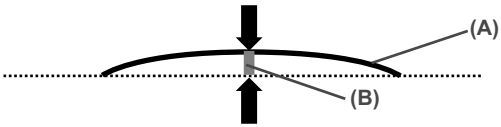 **It is recommended to print the curl-corrected paper one sheet at a time.**

Cause	Action
Inner Cover is not closed completely.	**Close the Inner Cover completely. Paper does not feed properly if the Inner Cover is even slightly open.** 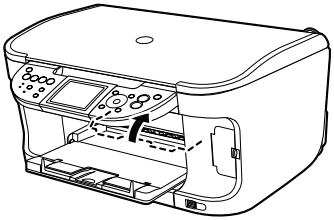
The media type is not selected correctly in the printer driver.	**Windows** **On the [Main] tab of the printer driver, ensure that the [Media Type] selected matches the paper loaded. The print surface is smudged with some printing jobs despite being set correctly. Should this occur, on the [Maintenance] tab, click [Custom Settings] and place a check in [Prevent paper abrasion].** **Macintosh** **In the [Print] dialog box of the printer driver, select [Quality & Media] from the pop-up menu, and then ensure that the [Media Type] selected matches the paper loaded. Additionally, the print surface may become smudged with some printing jobs despite being set correctly. Should this occur, click on [Custom Settings] from the Canon IJ Printer Utility pop-up menu and place a check in [Prevent paper abrasion].**
Paper is loaded incorrectly.	**Load in the portrait orientation regardless of the print direction of the Auto Sheet Feeder or Cassette.** **Ensure that paper is loaded correctly. Slide the Paper Guides against the paper stack.**
The paper stack exceeds the capacity of the Auto Sheet Feeder.	**The paper cannot be fed normally depending on its media type or your environment where the temperature and humidity are high or low. In that case, reduce the amount of paper to half (approx. 0.2" / 5 mm in height).**

Note

If printing surface abrasion is not resolved even after taking the actions above:

Follow the procedure below to specify <Prevent paper abrasion> to <ON>.

The procedure below can also be used when printing directly from a digital camera.

1. Display the Device settings screen. See “Display the Device settings screen.” on page 91.
2. Use [▲] or [▼] to select <Print settings>, then press [OK].
3. Use [▲] or [▼] to select <Prevent paper abrasion>, then press [OK].
4. Use [▲] or [▼] to select <ON>, then press [OK].

*After finishing printing, use the same procedure to specify <Prevent paper abrasion> back to <OFF>.

■ Paper Curls/Ink Blots

Cause	Action
Paper being used is too thin.	**Use Photo Paper Pro or other Canon specialty paper to print images that have a high color saturation. See "Media types you cannot use" on page 21.**
The media type is not selected correctly on the Operation Panel.	**Ensure that the media type selected on the Operation Panel matches that of the paper loaded.**

Paper Jams

Cause	Action
Paper jams in the Paper Output Slot/ Auto Sheet Feeder.	**Remove the paper according to the following procedure.** **1. Slowly pull the paper out, either from the Auto Sheet Feeder or from the Paper Output Slot, whichever is easier.** 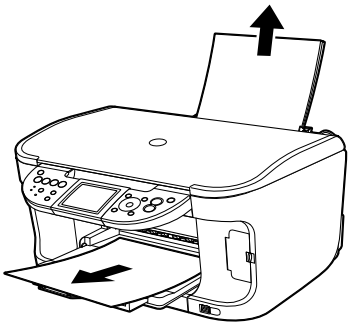 ● **If the paper tears and a piece remains inside the machine, open the Scanning Unit (Printer Cover) and remove it. Be careful not to touch the components inside the machine at this time.** **After removing all paper, close the Scanning Unit (Printer Cover), turn the machine off and turn it back on.** ● **If you cannot pull the paper out, turn the machine off and turn it back on. The paper will be ejected automatically.** **2. Reload the paper into the machine and press [OK].** ● **If you have turned off and on the machine in step 1, you will need to retry printing, because this operation cancels any print jobs in progress.** **If you cannot remove the paper or the paper tears inside the machine, or if the paper jam error continues after removing the paper, contact the Canon Customer Care Center.**

Cause	Action
Paper jams inside the machine (Transport Unit).	**Remove the paper according to the following procedure.** **1. Open the Rear Cover.** 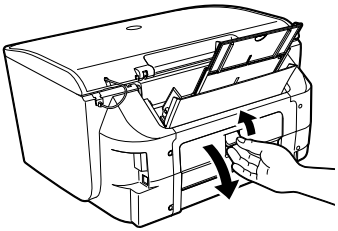 **2. When you can see the jammed paper, slowly pull the paper out.** 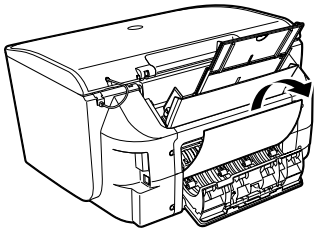 **Be careful not to touch the components inside the machine.** **If you cannot pull the paper out, turn the machine off and turn it back on. The paper will be ejected automatically.** **3. Close the Rear Cover.** **4. If you could not extract the paper in step 2, remove the Cassette.** **5. Slowly pull the jammed paper out.** 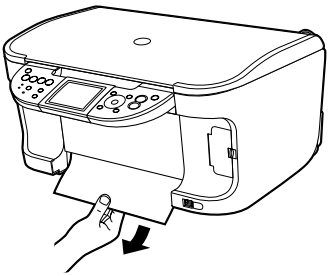 **6. If any paper is sticking out of the Cassette, reload the paper in the Cassette.** **7. Insert the Cassette into the machine again, and press [OK] on the machine.** **If you have turned off and on the machine in step 2, you will need to retry printing, because this operation cancels any print jobs in progress.** **If you cannot remove the paper or if the paper tears inside the machine, or if the paper jam error continues after removing the paper, contact the Canon Customer Care Center.**

Cause	Action
Paper jams inside the machine (Duplex Transport Section).	**Remove the paper according to the following procedure.** **1. Remove the Cassette.** **If the paper is loaded in the Auto Sheet Feeder, remove the paper from the Auto Sheet Feeder.** **2. Stand the machine with the left side down.** **Caution** **Always stand the machine with the left side down when standing the machine. Be careful that the right side is not down.** **3. Slowly pull the jammed paper out while pulling the green cover toward you.** 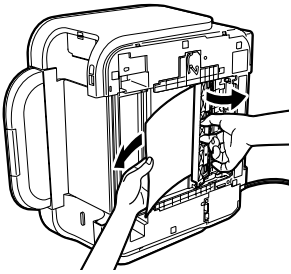 **Caution** **Put back the machine immediately after removing the jammed paper.** **4. If any paper is sticking out of the Cassette, reload the paper in the Cassette.** **Reload paper in the Auto Sheet Feeder, if necessary.** **5. Insert the Cassette into the machine.** **6. Press [OK] on the machine.** **If you cannot remove the paper or if the paper tears inside the machine, or if the paper jam error continues after removing the paper, contact the Canon Customer Care Center.**
Landscape Credit Card-sized paper jams inside the machine.	**You cannot load Credit Card-sized paper in the landscape orientation.** **Remove the paper according to the following procedure.** **1. Load Credit Card-sized paper in the Auto Sheet Feeder one sheet at a time.** **Do not load it in the landscape orientation.** **2. Press [ON/OFF] on the machine to turn off the power.** **3. Press [ON/OFF] again on the machine to turn on the power.** **The paper is fed and the jammed paper is ejected accordingly.** **If you cannot remove the jammed paper or the error still persists, contact the Canon Customer Care Center.**
Landscape 4" x 6" / 101.6 x 152.4 mm media loaded in the Cassette jams inside the machine.	**Load 4" x 6" / 101.6 x 152.4 mm media in the portrait orientation regardless of the print direction.** **Remove the paper according to the following procedure.** **1. Press [ON/OFF] of the machine to turn off the power.** **Open the Rear Cover.** **2. Fold a piece of plain A4- or Letter-sized paper in four, push it in until it hits the jammed paper, then pull out the paper folded in four.** **3. Close the Rear Cover, then press [ON/OFF] of the machine to turn on the power.** **Wait until the jammed paper is automatically ejected.** **If you cannot remove the jammed paper or the error still persists, contact the Canon Customer Care Center.**

Cannot Print Properly from a Photo Index Sheet

Cause	Action
<Failed to scan Photo Index Sheet.> is displayed.	● **Confirm the orientation and position of the Photo Index Sheet on the Platen Glass. See "Printing by Using the Photo Index Sheet" on page 56.** ● **Make sure that the Platen Glass or Photo Index Sheet is not dirty. See "Printing by Using the Photo Index Sheet" on page 56.** ● **Make sure all required circles on the Photo Index Sheet are filled in. If the filled circles on the sheet are not marked dark enough, the machine may not read the settings.**

Cannot Print Properly from the Digital Camera

The following are the possible errors that may occur when printing directly from a digital still camera or digital video camcorder*, and the countermeasures to eliminate them.

* Hereafter, the digital still camera and digital video camcorder are collectively called a digital camera or camera.

Note

- PictBridge or Canon Bubble Jet Direct compatible digital cameras can be connected to your machine for direct printing.
- This section describes errors that are indicated on Canon-brand PictBridge- or Bubble Jet Direct compatible cameras. The error messages and operations may vary depending on the camera you are using. If you are using a non-Canon PictBridge compatible camera and not sure how to clear the printer error from the camera, confirm the message displayed on the LCD of the machine and clear the error. For clearing an error from the machine, see "An Error Message is Displayed on the LCD" on page 113.
- A communication time out occurs if printing takes a long time or if it takes too much time to send data. This may stop printing. In such cases, disconnect the cable between the machine and the camera, and reconnect the cable between the machine and the camera. Then, turn the camera on, if it does not automatically turn on. If the problem is still unresolved, select some other photo and check if it can be printed or not.
- Some PictBridge compatible devices may need to be switched to printing mode before connecting them to the machine. Also, it may need to be turned on manually or switched to replay mode after connected to the machine. Refer to the instruction manuals supplied with your PictBridge compatible device and take the necessary steps before connection.
- The Print Head nozzles may be clogged if printing becomes faint or colors are incorrect. See "When Printing Becomes Faint or Colors are Incorrect" on page 101.
- If the paper is curled or its surface is scratched during printing, make sure that you are using the correct type of paper. If this error occurs even when you are using the correct type of paper, see "If printing surface abrasion is not resolved even after taking the actions above:" on page 124.
- For the errors indicated on the camera and their solution, also refer to the user's manual of the camera. For other troubles with a digital camera, contact the manufacturer of the camera.

Error Message On Camera	Action
Printer in use/Printer warming up	**Photos are printed from the computer.** **Wait until printing ends. When it is ready, the machine starts printing automatically.**
No paper/Paper Error	● **Load paper in either the Auto Sheet Feeder or Cassette which you have selected with [Feed Switch] on the machine, and select "Continue"** *1 **in the display on your camera.** ● **The camera does not support the page size that is selected on this machine. Check the print settings and select the page size that is supported by the camera.** ● **Open the Paper Output Tray to resume printing. Close the Inner Cover if it is open. Select "Stop" in the display on your camera to stop printing.**
Paper jam	**Select "Stop" in the display on your camera to stop printing.** **Remove the jammed paper, load new paper, and press [OK] on the machine and retry printing.**
Printer cover open	**Close the Scanning Unit (Printer Cover) on the machine.**
No print head	**The Print Head is defective or not installed.** **Install a Print Head according to the *Easy Setup Instructions*.** **If the Print Head has already been installed, remove the Print Head and reinstall it.** **If the error still remains, the Print Head may be defective. Contact the Canon Customer Care Center.**
Waste tank (ink absorber) full	**This error message indicates that the waste ink absorber is nearly full.** **The machine has a built-in waste ink absorber to hold the ink used during Print Head cleaning, for example. You can continue printing by selecting "Continue"** *1 **on the display on your camera.** **However, because printing is disabled once the waste ink absorber becomes completely full and until the waste ink absorber is replaced, you are recommended to contact the Canon Customer Care Center as early as possible. You will need to replace a particular part of the machine.**
Low ink level	**Slow flashing (about three seconds in red) of an ink tank lamp indicates that ink in this tank is low. Prepare a new ink tank.** **Select "Continue"** *1 **in the display on your camera to resume printing.**

Error Message On Camera	Action
No Ink	**You can check the machine status according to the way the ink tank lamps (red) flash.** **Check the status of each lamp and take the appropriate action to clear the error. See** **"Getting the Ink Level Information" on page 95****.** **When the ink tank lamp is off:** **The ink tank may not be installed properly. Install the appropriate ink tank.** **When the ink tank lamp flashes fast (about one second):** ● **The ink has run out.** **Replace the ink tank, and close the Scanning Unit (Printer Cover).** **If printing is in progress and you want to continue printing, select "Continue"** *1 **in the display on your camera with the ink tank installed. Then printing can continue under the ink out condition. Replace the empty ink tank immediately after the printing. The machine may be damaged if printing is continued under the ink out condition.** **Note** **If multiple ink tank lamps are flashing, check how fast they flash. Fast flashing (about one second) indicates the ink is empty. Slow flashing (about three seconds) indicates ink is low. For details on different flashing speeds, see** **"Knowing When to Replace Ink Tank" on page 96****.** ● **Some ink tanks are not installed in place, or more than one ink tanks of the same color are installed.** **Confirm that the ink tanks are installed in the appropriate positions. See** **"Replacing an Ink Tank" on page 95****.** ● **The ink tank may not be compatible with this machine.** **Install the appropriate ink tank. See** **"Replacing an Ink Tank" on page 95****.**
Ink error/No ink	**The ink tank that was once empty is installed. Replace the ink tank.** **Printing under the situation may damage the Print Head. Canon shall not be liable for any machine malfunction or damage caused by refilled ink tanks.** **If you want to continue printing with the refilled ink tank installed, press and hold [Stop/Reset] for at least 5 seconds, and then release it.** **Using refilled ink tanks are memorized.** *** This operation will release the function for detecting the remaining ink level.**
Hardware Error/No ink	**Ink tank errors have occurred. Replace the ink tank.** **See** **"Replacing an Ink Tank" on page 95****.**
Printer error	**An error requiring servicing might have occurred.** **Disconnect the cable between the machine and the camera, turn off the machine, and unplug the power cord of the machine from the power supply. After a while, plug the power cord of the machine back in, turn on the machine, and then reconnect the camera to the machine. If the same error occurs, contact the Canon Customer Care Center.**

*1 To resume printing, you can press [OK] on the machine instead of selecting Continue.

Cannot Print Properly through Wireless Communication

The following are the causes of the trouble may occur when printing through infrared communication.

For the trouble when printing through Bluetooth communication, refer to the *Bluetooth User's Guide*.

Cause	Action
The installation place, distance, and/or angle is improper.	**When printing through infrared communication, confirm that the infrared communication ports on both the machine and the mobile phone are placed to face each other at the proper angle and distance, and that there is nothing to block the communication between them, and then try printing again. The proper distance and angle for communication vary depending on the specifications of your mobile phone and on external environment. Place the machine within 7.87" / 20 cm from the mobile phone for proper communication.**
During infrared communication, infrared rays were interrupted or another infrared communication device is operating nearby.	**If infrared communication between the infrared ports of the machine and the mobile phone is interrupted by any obstacle for ten and several seconds or longer during printing, the paper on which data is being printed is ejected and the machine is reset. Remove the obstacle and retry printing.** **If an infrared communication device is operating nearby, interference can occur and fail in printing the document to the end. While printing a document through infrared communication, do not operate another infrared communication device, such as a remote controller of a TV, nearby.**
The version of the infrared communication port being used is not compatible with IrDA.	**The infrared communication function of the machine is only compatible with mobile phones with IrDA compliant infrared communication ports. Printing through infrared communication cannot be performed by any other types of mobile phones.**

Cannot Install the MP Drivers

Cause	Action
Windows **Unable to proceed beyond the Printer Connection screen**	**Reinstall the MP Drivers.** 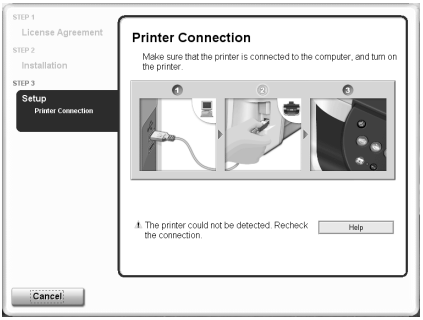 **1. Click [Cancel] on the [Printer Connection] screen.** **2. Click [Start Over] on the [Installation Failure] screen.** **3. Click [Back] on the screen that appears next.** **4. Click [Exit] on the [Welcome] screen, then remove the CD-ROM.** **5. Turn the machine and the computer off.** **6. Check the cable connection.** **7. Restart the computer.** **8. Make sure that no other applications (including anti-virus software) are running in the background.** **9. Carefully follow the procedures described in the *Easy Setup Instructions* and reinstall the MP Drivers.**

Cause	Action
Installation does not start automatically when the Setup CD-ROM is inserted into the drive.	**Windows** **Click [Start], select [My Computer] and then double-click the CD-ROM icon.** **For non-Windows XP users, open the [My Computer] window and then double-click the CD-ROM icon.** **Macintosh** **Double-click the CD-ROM icon on your desktop to start installation.** **If the CD-ROM icon is not displayed on the desktop, there is a problem with the CD-ROM.** **Contact the Canon Customer Care Center.**
You have a defective Setup CD-ROM.	**If you have a defective Setup CD-ROM, please contact the Canon Customer Care Center.** **Windows** **Make sure the CD-ROM is readable from Windows Explorer.** **Macintosh** **Reconfirm that the CD-ROM icon is displayed when you insert the CD-ROM.**
Windows **The computer has an old version of the software installed. (Canon MultiPASS is registered as a program in the [Start] menu.)**	**Uninstall the old version of the software following the instructions in the manual of that version, and reinstall the new version.**
Installation procedure not followed correctly	**Follow the *Easy Setup Instructions* packaged with your machine for proper MP Drivers installation.** **If the MP Drivers was not installed correctly, uninstall the MP Drivers, and restart your computer. Try to reinstall the MP Drivers.** **Windows** **If the installer was forced to be terminated due to an error, restart your computer.** **Reinstall the MP Drivers.**

Cannot Connect to the Computer Properly

■ Printing Speed is Slow / USB 2.0 Hi-Speed Connection Does Not Work

Cause	Action
Your environment is not fully compatible with USB 2.0 Hi-Speed.	If your environment is not fully compatible with USB 2.0 Hi-Speed, the printer will operate at a lower speed provided under USB 1.1. In this case, the machine operates properly but printing speed may slow down due to communication speed. Check the following to ensure that your computer environment supports USB 2.0 Hi-Speed connection. ● The USB port on your computer supports USB 2.0 Hi-Speed connection. ● Both the USB cable and USB hub support USB 2.0 Hi-Speed connection. Be sure to use a certified USB 2.0 Hi-Speed cable. You are recommended to use the cable no longer than 9.8 feet (3 meters). ● Your computer supports the USB 2.0 Hi-Speed connection. Obtain the latest version of the USB 2.0 Hi-Speed driver and install it on your computer. ● The USB 2.0 Hi-Speed driver operates properly. Obtain the latest version of the USB 2.0 Hi-Speed driver and install it on your computer. **Important** For how to confirm the points above, contact the manufacturer of your computer, USB cable, or USB hub, as appropriate.

Windows

■ When You Connect to a Computer Running Windows XP, the Screen Shows the Warning Message “This device can perform faster” or “High-SPEED USB Device Plugged into non-High-SPEED USB Hub”

Cause	Action
You connect to a computer that does not support USB 2.0 Hi-Speed.	Your environment is not fully compatible with USB 2.0. See “Printing Speed is Slow / USB 2.0 Hi-Speed Connection Does Not Work” on page 133.

Problems Scanning

■ Scanner won’t work

Cause	Action
The machine is not recognized by the computer.	Restart the computer. This may enable the computer to recognize the machine.

■ ScanGear MP won't start

Cause	Action
Scanner driver (ScanGear MP) not installed.	**Set the Setup CD-ROM and install the software.**
Scanner is not selected in the application software.	**In the application software, select this machine in [Select Source] or [Import] under the [File] menu.** **Example: ArcSoft PhotoStudio** **Windows** 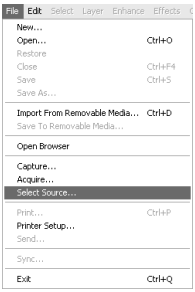 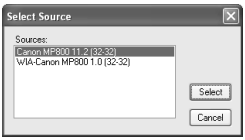 ***Display may differ depending on your operating system.** **If you are using an older application software, the menu item may be named [Select TWAIN-compliant device] instead of [Select Source].** **Macintosh** 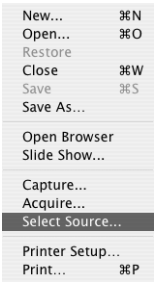
The feature of the application software does not support TWAIN.	**Start ScanGear MP from within a TWAIN compatible software.**
An error message appears and the ScanGear MP window fails to appear.	● **Reattaching the USB cable. Be sure to use a certified USB 2.0 Hi-Speed cable. You are recommended to use the cable no longer than 9.8 feet (3 meters).** ● **If a USB hub is used for the connection, do not use it. Attach the cable to a USB port on the computer itself (not the hub).** ● **Attach the USB cable to a different USB port on the computer itself (not a hub).** ● **Set the Setup CD-ROM and install the software.** ● **Select this machine in [Select Source] or [Import] in your application software.** ● **Make sure that your application software supports TWAIN. You cannot start ScanGear MP from within an applilcation software that does not support TWAIN.**

■ Cannot display preview

Cause	Action
An error message “Release the lock switch” appears and the machine fails to preview.	Close the application softwares, disconnect the USB interface cable from the scanner and set the Scanner Lock Switch to the release position. Then reconnect the USB interface cable to the computer. For details on releasing the Scanner lock, refer to the *Easy Setup Instructions*.

■ Computer stops operating during scanning

Cause	Action
Output resolution set too high.	Reboot the computer, lower the output resolution and rescan.
The hard disk does not have enough available space.	● Reset and reboot the computer, delete unnecessary files and application software, and rescan. ● Open ScanGear MP from within the application software, click the [Preferences] button in the Advanced Mode, and change the folder listed in the [Select Folder Where Temporary Files are Saved] category to one on a disk with sufficient free space.
Multiple devices connected to the USB port.	Disconnect all other devices but the machine from the port.

■ Scan quality is poor (Poor image displayed on the monitor)

Cause	Action
The resolution is low.	If the image looks grainy, increase the scan resolution. For details, refer to the *Scan Guide*.
Specification of the application software.	Some application software does not display the image clearly if the image is too small. Set the view mode to 100%.
Moiré appears.	Set [Descreen] to [ON] in the [Image Settings] section of the Advanced Mode of ScanGear MP. **Note** Moiré may appear when you scan digital photo prints.
Inappropriate display settings.	Windows Set your display settings on your computer to Medium (16 bit) or higher. In the [Start] menu click [Control Panel], then [Appearance and Themes] and then [Display], and on the [Settings] sheet, set [Color quality] to [Medium (16 bit)] or [Highest (32 bit)] or a higher setting. Macintosh In the System Preferences dialog, click the [Displays] icon and select the [Display] tab. Set the [Colors] list box to [Thousands] or a higher setting.
Dirty Platen Glass or FAU Protective Sheet.	See “Cleaning Your Machine” on page 107 to clean them.
The status of the original is poor.	Scan with certain functions such as [Reduce Dust and Scratches], [Fading Correction] or [Grain Correction] in the [Image Settings] section of the Advanced Mode of ScanGear MP. **Note** If a print out of an image does not appear satisfactory or the same as what you see on the monitor, you may need to change the machine’s settings, or the machine itself may have engaged in problems.

■ Parts of image missing or surrounded by extra white areas

Cause	Action
Scan area was specified larger than the original.	Specify the scan area appropriately. If you click the Auto crop button of the ScanGear MP, the scan area is adjusted automatically to match the size of the original. When scanning an original surrounded by white borders such as a photo print, of if you otherwise want to specify a custom scan area, specify the scan area manually. Refer to the *Scan Guide* for details on manual scan area specification.

■ Trouble scanning with Multi-Scan or Multi-Crop function

Cause	Action
The original is positioned outside the supported area.	Check the position of the original on the Platen Glass. Observe the following when using the Multi-Scan or Multi-crop function. ● There should be a gap of at least 0.4" / 10mm between the edge of the Platen Glass and originals. ● Leave at least 0.4" / 10 mm between the originals. ● A maximum of 10 originals can be scanned at once. ● If an original is slightly crooked on the Platen Glass-within 10 degrees of true-the image is automatically straightened. ● The Multi-Scan function only works with rectangular originals such as photos. ● Originals that are not rectangular (irregularly shaped, close-cropped photos) cannot be detected correctly.
Error arising from application software specifications.	Some application software do not support multiple image scanning. Scan each item individually without using the Multi-Scan or Multi-Crop function.

■ Slow scanning speed

Cause	Action
Resolution is set higher than necessary.	To view the image on a monitor, set the output resolution to 75 dpi. To print, set the output resolution to a value such as 300 dpi.
Image correction features such as dust and scratch reduction, fading correction, and descreening are enabled in ScanGear MP.	Set [Reduce Dust and Scratches], [Fading Correction], and [Descreen] to [OFF] in the [Image Settings] section of the Advanced Mode of ScanGear MP.

Macintosh

■ “There is not enough memory.” message is displayed

Cause	Action
There is not enough memory to continue scanning.	Exit any application software that are running, and try to run this software again.

■ Scanned image not displayed properly

Cause	Action
Scanned image prints out enlarged (reduced).	Set the printing size in the application software. Example: ArcSoft PhotoStudio 1. With the image in the selected state, click the [File] menu and select [Print]. 2. Move the print size slider left or right in the Print dialog to adjust the printing size. The preview image to the left will change size accordingly. 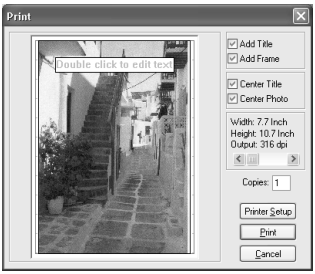
Scanned image enlarged (reduced) on the computer monitor.	● Change the display setting in the application software. Windows ● Images opened in [Paint] or [Imaging] may be displayed in full size and you may not be able to reduce its display size. Open the image in an application software supplied with the scanner instead. Refer to the on-screen manual for each application software for the detailed procedures. ● Change the resolution setting in the scanner driver and rescan. The higher the resolution, the larger the resulting image will be. ● Some application software do not display clear images at small image display settings. Set the scale to 100%.
Scanned image won't open.	The file name extension is not supported by the application software. Rescan the image using an application software, such as ArcSoft PhotoStudio, and change the file name extension when saving the image. Refer to the on-screen manual for each application software for the detailed procedures.

■ Trouble scanning with MP Navigator

Cause	Action
The original may not be scanned correctly when [Document Size] is set to [Auto Detect].	Set the [Document Size] to the actual size of the original, and scan it again. If the size you need cannot be set, scan to a larger size and trim it. For more information, refer to the *Scan Guide*.

■ Image position and size incorrect when scanning from the machine's operation panel

Cause	Action
MP Navigator settings do not match the originals.	Set the MP Navigator [Document Type] and [Document Size] to match those of the originals being scanned. For more information, refer to the *Scan Guide*.

Cannot Scan Films

Cause	Action
ScanGear MP and MP Navigator settings are not set for scanning film.	● **When scanning in the Simple Mode in ScanGear MP, select [Negative Film (Color)] or [Positive Film (Color)] in the [Select Source] category.** ● **When scanning in the Advanced Mode in ScanGear MP, select [Color Negative Film], [Color Positive Film], [Monochrome Negative Film], [Monochrome Positive Film] in the [Select Source] category.** ● **When scanning on the MP Navigator, scan using [Scan Film].**
Resolution setting is too high and scanning is slow.	**If the Output Resolution is set to too high, scanning takes a long time or the computer seems to be freezing. If this happens, lower the Output Resolution and rescan.**

■ Thumbnail Display does not display correctly after previewing

Cause	Action
You are attempting to scan film with extremely dark or bright contents./ The spaces between frames are extremely narrow (0.08" / 2 mm is standard).	**If thumbnails are not displayed properly after previewing with ScanGear MP, scan in the Advanced Mode. For more information, refer to the *Scan Guide*.**

■ Cannot obtain a clean scan, colors scan incorrectly

Cause	Action
Film condition is poor due to faded colors.	**In the ScanGear MP's Advanced Mode/Image Settings, correct the image using the [Fading Correction] and [Grain Correction] functions.** **Note** *** If a print out of an image does not appear satisfactory or the same as what you see on the monitor, you may need to change the print settings, or the machine itself may have engaged in problems. See "Ink Does Not Come Out/Printing is Blurred/Colors are Wrong/White Streaks/Straight Lines are Misaligned/Cannot Print to End of Job" on page 117.**

■ Image becomes too dark or too bright when cropping frame is moved, expanded or contracted

Cause	Action
Changing the size or position of the cropping frame selects inappropriate color data.	**Perform the following procedures in Advanced Mode in ScanGear MP.** **1. Click [Preview] to rescan the preview image.** **2. Confirm that the display mode is set to [Thumbnail Display].** **If the display mode is set to Thumbnail Display Off, click [Thumbnail] to change to Thumbnail Display On.** **3. In the [Apply the tone value to all frames] section, click [Apply].** 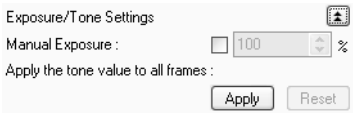 **4. Adjust the cropping frame.** **5. Click [Scan].**

An Error Message Appears on the Screen

Windows

■ Service Error 5100 is Displayed

Cause	Action
Movement of the Print Head Holder is blocked.	Clear the paper jam or foreign object that is preventing the Print Head Holder from moving, cancel printing from your computer, then turn off the machine and turn it back on again.

Windows

■ Writing Error/Output Error/Communication Error

Cause	Action
Machine is not ready.	Ensure that the lamp on the Operation Panel lights. If the lamp on the Operation Panel is off, turn the machine on. While [COPY] is flashing, the machine is initializing. Wait until [COPY] stops flashing and stays lit. When the Alarm Lamp lights orange, an error may occur in the machine. For details on how to resolve the error, see "An Error Message is Displayed on the LCD" on page 113.
Paper is not loaded.	Load paper and press [OK]. If paper is loaded, ensure that the paper source (the Auto Sheet Feeder or Cassette) is selected correctly. If the paper source is not selected correctly, use [Feed Switch] or the printer driver to change the paper source. If this error (Paper is not loaded) is ignored for a certain period of time, an additional message may be displayed.
Printer port setting does not match the interface connected to the machine.	Check the printer port settings. 1. Click [Start] and select [Control Panel], [Printers and Other Hardware], and then [Printers and Faxes]. For non-Windows XP, click [Start], select [Settings], and then [Printers]. 2. Select the icon of your machine. 3. Open the [File] menu and select [Properties]. 4. Click the [Ports] tab (or the [Details] tab) to confirm the port settings. A USB port is selected if either [USBnnn (Canon MP800 Series Printer)] or [MPUSBPRNnn (Canon MP800 Printer)] (where n is a number) is indicated. If the port setting is not correct, change the port setting according to the interface you are using on the [Ports] tab (or the [Details] tab), or reinstall the MP Drivers.
Machine is not properly connected.	Ensure that the printer cable is securely connected to the computer. ● If using a switching hub or other device, disconnect the machine and reconnect it directly to the computer and try printing again. If successful, the problem may have been with the device. ● There could also be a problem with the cable(s). Replace the cable(s) and try printing again.

Cause	Action
MP Drivers is not installed properly.	Uninstall then reinstall the MP Drivers. 1. Click [Start], and select [All Programs] (or [Programs]), the name of your machine, and [Uninstall]. 2. Follow the on-screen instructions to uninstall the driver. 3. Follow the procedures described in the *Easy Setup Instructions* and reinstall the MP Drivers.

■ When an Error is Displayed Regarding Automatic Duplex Printing

Cause	Action
The correct media size is not selected in the printer driver.	Check the Page Size setting from within your application software to ensure that it matches the size of the paper loaded. Check [Page Size] on the [Page Setup] tab in the printer properties dialog box (Windows) or the [Page Setup] dialog box (Macintosh) to ensure that it matches the size of the paper loaded. The page sizes that can be used for Automatic Duplex Printing are Letter, A4, B5, A5, and 5" x 7" / 127.0 x 177.8 mm. Check that the page size of the loaded paper is correct. **Note** To print on both sides of the page manually, follow the procedure below. Windows On the [Page Setup] tab, clear the [Automatic] check box. Then try printing again. Macintosh The manual duplex printing function cannot be used.

Macintosh

■ Error No.: 300 is Displayed

Cause	Action
The machine is not ready.	Ensure that the lamp on the Operation Panel lights. If the lamp on the Operation Panel is off, turn the machine on. While [COPY] is flashing, the machine is initializing. Wait until [COPY] stops flashing and stays lit. When the Alarm Lamp lights orange, an error may occur in the machine. For details on how to resolve the error, see "An Error Message is Displayed on the LCD" on page 113.
Machine is not properly connected.	Ensure that the printer cable is securely connected to the computer. ● If using a switching hub or other device, disconnect the machine and reconnect it directly to the computer and try printing again. If successful, the problem may have been with the device. ● There could also be a problem with the cable(s). Replace the cable(s) and try printing again.

Cause	Action
The name of the machine being used is not selected in the [Printer] pull-down menu of the [Print] dialog box.	Select [MP800] from the [Printer] pop-up menu in the [Print] dialog box of the printer driver. If [MP800] is not displayed in the printer list, follow the procedure below to confirm the settings. 1. Select [Edit Printer List...] from the [Printer] pop-up menu in the [Print] dialog box. The printer list is displayed. 2. Check that [MP800] is displayed in the printer list. If [MP800] is not displayed, install the MP Drivers again referring to the *Easy Setup Instructions* for the operation.

Macintosh

■ Error No.: 1700 is Displayed

Cause	Action
The waste ink absorber is almost full.	Ink used for cleaning is absorbed in a waste ink absorber placed in the machine. Press [OK] to cancel the error so that you can continue printing. Once the waste ink absorber becomes completely full, printing cannot be done until the waste ink absorber is replaced. Canon recommends to contact the Canon Customer Care Center as soon as possible.

Macintosh

■ Error No.: 1851 is Displayed

Cause	Action
Inner Cover is open when starting regular printing.	Close Inner Cover, then press [OK] on the machine.

Macintosh

■ Error No.: 1856 is Displayed

Cause	Action
During regular printing, Inner Cover is opened.	Close Inner Cover, press [OK] on the machine, then try printing again. One page of the print data being sent at the time of the error will be erased, so print that page again.

Macintosh

■ Error No.: 2001 is Displayed

Cause	Action
A specified period of time has elapsed without receiving a response from the digital camera./ The digital camera or digital video camcorder connected is not compatible with this machine.	Disconnect the camera cable and reconnect it. Depending on the model or brand of your device, you may have to select a print mode compliant with PictBridge before connecting the device. You may also have to turn on the device or select Play mode manually after connecting the device to the machine. Unplug the connecting cable and clear the error. Perform necessary operations for connection referring to the instruction manual supplied with the PictBridge compliant device, and then connect the cable again. If the error is still unresolved, there is a possibility that you are using a digital camera or digital video camcorder that is not supported by this machine. Use a digital camera or digital video camcorder compatible with this machine.

Macintosh

■ Error No.: 2500 is Displayed

Cause	Action
Auto head align has failed.	See "Auto head align has failed." on page 114 .

Windows

■ For Windows Users

Cause	Action
The [Instructions] button is not displayed on the printer driver screen.	The [Instructions] on the printer driver screen is not displayed if the on-screen manuals (instruction manuals) are not installed. Set the "Setup CD-ROM" in your computer and install the on-screen manuals (instruction manuals). **Note** The [Instructions] is displayed only on [Main] and [Maintenance] tabs.
Scan Guide is not displayed.	The button for displaying the scanner driver operating instruction is grayed out when the on-screen manuals (instruction manuals) are not installed. Set the "Setup CD-ROM" in your computer and install the on-screen manuals (instruction manuals).

If You Cannot Resolve the Problem

If you cannot resolve the problem with any of the workarounds in this chapter, please contact the Canon Customer Care Center.

Canon support staff are trained to be able to provide technical support to satisfy customers.

Caution Attempts by customers to repair or take apart the machine will invalidate any warranty regardless of whether the warranty has expired.

Before contacting the Canon Customer Care Center, confirm the following:

- Product name: PIXMA MP800
- Serial number: written on label inside machine
- Details of the problem
- What you tried to solve the problem, and what happened

Note If the machine emits any unusual sound, smoke, or odor, turn it off immediately. Unplug the power cord from the outlet and contact the Canon Customer Care Center. Never attempt to repair or disassemble the machine yourself.

Chapter 13

Appendix

Printing Area

To ensure the best print quality, the machine allows a margin along each edge of media. The actual printable area will be the area without these margins. By selecting Borderless Printing*, printing with no margins is possible.
* This is available in A4, Letter, 4" x 6" /101.6 x 152.4 mm, 4" x 8" /101.6 x 203.2 mm, 5" x 7" / 127.0 x 177.8 mm, and 2.13" x 3.39" / 54.0 x 86.0 mm sizes of paper. If you are making borderless copies in Copy mode or borderless prints in Photo/Film mode, you can adjust the amount of image that extends off the paper by setting <Extended copy amount> under <Print settings>.

Note

- In duplex printing, the printable area at the top of the page is 2 mm / 0.08 inches narrower than the usual area.
- If you print fully on the printable area outside of the recommended printing area, print quality or paper feeding accuracy may go down.

■ A5, A4, B5, 4" x 6", 4" x 8", 5" x 7", 2.13" x 3.39"

Size	Printable Area (width x height)
A5	141.2 x 202.0 mm / 5.6 x 7.9 inches
A4	203.2 x 289.0 mm / 8.0 x 11.4 inches
B5	175.2 x 249.0 mm / 6.9 x 9.8 inches
5" x 7" / 127.0 x 177.8 mm	120.2 x 169.8 mm / 4.7 x 6.7 inches
4" x 6" / 101.6 x 152.4 mm	94.8 x 144.4 mm / 3.7 x 5.7 inches
4" x 8" / 101.6 x 203.2 mm	94.8 x 195.2 mm / 3.7 x 7.8 inches
2.13" x 3.39" / 54.0 x 86.0 mm	47.2 x 78.0 mm / 1.86 x 3.07 inches

Note

When Printing on Photo Paper Pro PR-101, Glossy Photo Paper GP-401, Glossy Photo Paper “Everyday Use” GP-501, Photo Paper Plus Glossy PP-101, Photo Paper Plus Double Sided PP-101D, Photo Paper Plus Semi-gloss SG-101 and Matte Photo Paper MP-101, selection of “Borderless Printing” enables you to make prints with no margins.

However, Borderless Printing may reduce the print quality on the top and bottom edges of the paper or cause it to become smudged.

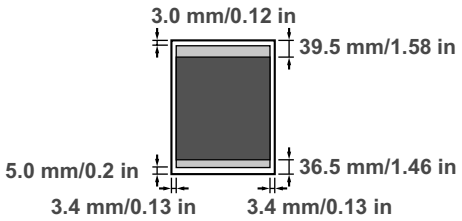

Printable area

Recommended printing area

■ Letter, Legal

Size	Printable Area (width x height)
Letter	203.2 x 271.4 mm / 8.0 x 10.7 inches
Legal	203.2 x 347.6 mm / 8.0 x 13.7 inches

Note

When Printing on Photo Paper Pro PR-101, Glossy Photo Paper GP-401, Glossy Photo Paper “Everyday Use” GP-501, Photo Paper Plus Glossy PP-101, Photo Paper Plus Double Sided PP-101D, Photo Paper Plus Semi-gloss SG-101 and Matte Photo Paper MP-101, selection of “Borderless Printing” enables you to make prints with no margins.

However, Borderless Printing may reduce the print quality on the top and bottom edges of the paper or cause it to become smudged.

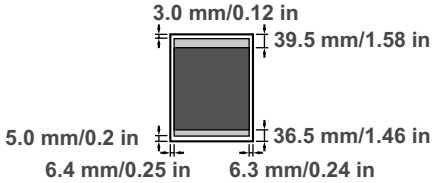

Printable area

Recommended printing area

■ Envelopes

Size	Printable Area (width x height)
European DL	190.5 x 103.2 mm / 7.5 x 4.1 inches
US Com. #10	211.8 x 98.0 mm / 8.3 x 3.9 inches

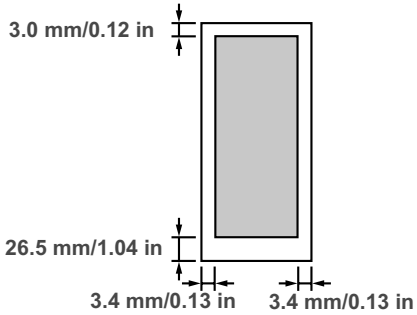

Printable area

Printable area

How to Read the On-screen Manuals

The on-screen manuals are manuals to be viewed on your computer.

Read these manuals for detailed information on usage of the machine that is not mentioned in this document, troubleshooting, or usage of the application softwares supplied with the Setup CD-ROM, etc.

You can install the on-screen manuals using the Setup CD-ROM by either of the following.

- Select “Easy Install” to install the on-screen manuals along with the MP driver and application softwares.
- Select “On-screen Manual” from “Custom Install” to install the on-screen manuals.

If you have not installed or have deleted the on-screen manuals, use either method above to install them.

Windows

- Browser: Windows HTML Help Viewer

Note

- Microsoft Internet Explorer 5.0 or later must be installed.
- The on-screen manual may not be displayed properly depending on your operating system or Internet Explorer version. We recommend that you keep your system up to date with Windows Update.

Macintosh

- Browser: Help Viewer

Note

The on-screen manual may not be displayed properly depending on your operating system. We recommend that you keep your system up to date.

Uninstalling the On-screen Manuals

Follow the steps described below to uninstall all of the installed on-screen manuals from your computer.

Windows

If the on-screen manuals have been installed, all of them will be deleted collectively.

1 Click [Start], and select [All Programs] (or [Programs]), [Canon MP800 Manual], and then [Uninstall].

2 Click [OK] when the confirmation message appears.

When the message prompting you to restart your computer is displayed, click [OK] to restart your computer.

Macintosh

Deleting the Printer Driver Guide

The *Printer Driver Guide* is deleted when the printer driver is deleted.

Deleting the User’s Guide and the Photo Application Guide

(1) Select [Applications] from the [Go] menu.

(2) Double-click the [Canon Utilities] folder, and then the [IJ Manual] folder.

(3) Drag the [MP800] folder into the trash.

(4) Drag the [MP800 On-screen Manual] on your desktop into the trash.

Transporting Machine

When relocating the machine or storing the machine for a long period of time, pack the machine using the original packing materials. If you do not have the original packing materials, pack the machine carefully using protective material and place inside a sturdy box.

Caution

Do not transport or store the machine on a slant, vertically or upside-down, as the ink may leak and damage the machine.

Important

- Make sure to lock the Scanning Unit (Printer Cover) by sliding the Scanner Lock Switch to the Lock position 🔒 .
- Pack the machine with the Print Head and ink tanks left installed.

Note

Before shipping the machine by special delivery or post, clearly label the box as “FRAGILE” or “HANDLE WITH CARE.”

Specifications

General Specifications	
Printing resolution	**9600 * x 2400 dpi. max.** *** Ink droplets can be placed with a pitch of 1/9600 inch at minimum.**
Print speed * *Based on Canon standard pattern. Print speed may vary depending on system configuration, software, document complexity, print mode and page coverage.	**Black printing (text pattern)** **Max Speed (Custom Setting 5): 30 ppm** **Standard: 15.1 ppm** **Color printing** **Max Speed (Custom Setting 5): 24 ppm** **Standard: 11.7 ppm**
Print width	**203.2 mm max. (8.0 inches)** **(for Borderless Printing: 215.9 mm / 8.5 inches)**
Resident print control mode	**Canon extended mode**
Receive buffer	**42 KB**
Interface	**USB 2.0 Hi-Speed / Direct Print Port** *** All operations are not guaranteed for computers standard-equipped with a USB 2.0 Hi-Speed interface.** *** Since the USB 2.0 Hi-Speed interface is fully upwardly compatible with USB Full-Speed (USB 1.1), it can be used at USB Full-Speed (USB 1.1).** **Direct Print Port** **IrDA (Image data only)** **Bluetooth (optional)**
Acoustic noise level	**Approx. 34.7 dB (A) (in the highest print quality mode)**
Operating environment	**Temperature: 5 to 35°C (41 to 95°F)** **Humidity: 10 to 90%RH (no condensation)**
Storage environment	**Temperature: 0 to 40°C (32 to 104°F)** **Humidity: 5 to 95% RH (no condensation)**

General Specifications

Power supply	**AC 110-120 V, 50/60 Hz** **AC 200-240 V, 50/60 Hz**
Power consumption	**Printing (Copy): Approx. 20 W** **Standby (minimum): Approx. 2 W** **OFF: Approx. 0.8 W**
Dimensions (with the Paper Support and Paper Output Tray retracted)	**470(W) x 490 (D) x 240 (H) mm** **18.5 (W) x 19.3 (D) x 9.4 (H) inches**
Weight	**12 kg (26.4 lb.)**
Print Head	**Black (PGI-5BK): 512 nozzles** **Cyan, Magenta, Yellow, Black (CLI-8BK): 512 x 6 nozzles**

Copy Specifications

Copy speed *Based on Canon standard pattern. Copy speed may vary depending on document complexity, copy mode, page coverage and the number of copies.	**Black & white: <Fast> mode approx. 30 cpm** **Color: <Fast> mode approx. 24 cpm**
No. of copies	**Maximum 99 copies**
Intensity adjustment	**9 levels**
Zoom	**25% to 400%**

Camera Direct Print (Canon Bubble Jet Direct)

Compatible paper	**Card #1 (Photo Paper Pro 4" x 6"/101.6 x 152.4 mm)** **Card #2 (Photo Paper Plus Glossy, Photo Paper Plus Semi-gloss, Glossy Photo Paper, or Glossy Photo Paper "Everyday Use" 4" x 6" / 101.6 x 152.4 mm)** **Card #3 (Photo Paper Plus Glossy 5" x 7" / 127.0 x 177.8 mm)** **LTR (Photo Paper Pro, Photo Paper Plus Glossy, Photo Paper Plus Semi-gloss, or Glossy Photo Paper Letter size)** **A4 (Photo Paper Pro, Photo Paper Plus Glossy, Photo Paper Plus Semi-gloss, Glossy Photo Paper, or Glossy Photo Paper "Everyday Use" A4 size)**
Layout print	**Standard: Borderless / with border, Index Print: 6-80 images (depending on the size of print media)**
Effect	**ExifPrint**
DPOF functions	**Ver. 1.00 compatible (Index print, number of copies, select images, print special characters (date))**

Camera Direct Print (PictBridge)

Page size	Default (Selections based on the machine setting) 10 x 15 cm/4" x 6" (Photo Paper Plus Glossy, Photo Paper Pro, Photo Paper Plus Semi-gloss, Glossy Photo Paper, Glossy Photo Paper "Everyday Use", Photo Stickers *1) 13 x 18 cm/5" x 7" (Photo Paper Plus Glossy)*2 A4/8.5" x 11" (Photo Paper Plus Glossy A4/Letter, Photo Paper Pro A4/Letter, Photo Paper Plus Semi-gloss A4/Letter, Glossy Photo Paper A4/Letter, Glossy Photo Paper "Everyday Use" A4, Plain Paper A4/Letter) 5.4 x 8.6 cm/Credit Card (Glossy Photo Paper Card Size) *1 Canon-brand sticker. Printing on this paper is available only when the Layout function on your camera has a 16-up option. See "Recommended Paper and Requirements" on page 19. *2 If using a Canon PictBridge-compatible camera, you can select it.
Media type	Default (Selections based on the machine setting), Photo (Photo Paper Plus Glossy, Glossy Photo Paper), Fast Photo (Photo Paper Pro), Plain Paper (Only A4/Letter)
Layout	Default (Selections based on the machine setting), Borderless, Bordered, N-up (2, 4, 9, 16*1), 35-up*2 *1 Layout compatible with Canon-brand sticker above. See "Recommended Paper and Requirements" on page 19. *2 Selected photos are printed in 35 mm film style layout (contact printing layout). This print setting is only available with certain Canon PictBridge-compliant devices. You can print shooting Info (Exif Data) on photos in list format, or in the margins of specified photos. Select Layout, then select the item displayed with the [i] icon. (Note that this print setting cannot be used for some models.) See "Recommended Paper and Requirements" on page 19.
Trimming	Default (Off: No trimming), On (follow camera's setting), Off
Image optimize	Default (Selections based on the machine setting), On, Off, "VIVID"*, "NR" (Noise Reduction)*, "VIVID+NR"*, "Face"* * If using a Canon PictBridge-compatible camera, you can select it.
Print date & file no.	Default (Off: No printing), Date, File No., Both, Off

Scan Specifications

Compatibility	TWAIN / WIA (Windows XP)
Maximum document size	A4/Letter, 8.5" x 11.7" / 216 x 297 mm
Scanning resolution	Optical resolution 2400 dpi x 4800 dpi Interpolated resolution 19200 dpi x 19200 dpi
Scanning image processing	Halftones: 256 levels of gray Color: 16,777,216 colors

Systems Requirements

Windows

- **Windows XP / Windows 2000 / Windows Millennium Edition / Windows 98[*1]: Pentium®, Celeron® 300 MHz[*2] / 128 MB RAM (256 MB recommended)**

  [*1] ScanSoft OmniPage SE (OCR software) does not support Windows 98 first edition.
  ScanSoft OmniPage SE may not be supplied with this machine in some country.

  [*2] 566 MHz or higher processor is required for USB 2.0 Hi-Speed performance.
- **USB 2.0 Hi-Speed interface**

  USB 2.0 Hi-Speed[*3] operation can only be guaranteed under the environments below.
  OS: Windows XP (SP1 or later)/Windows 2000 (SP4 or later)
  USB 2.0 Hi-Speed driver: USB 2.0 driver for Windows[*4]

  USB 2.0 Hi-Speed interface: a computer and a USB cable that comply with USB 2.0 Hi-Speed standard[*5]

  [*3] Since the USB 2.0 Hi-Speed interface is fully upwardly compatible with USB Full-Speed (USB 1.1), it can be used at USB Full-Speed (USB 1.1).

  [*4] Microsoft's authorized drivers are available through Windows Update or Service Pack installation. Any non-Microsoft USB 2.0 drivers are not guaranteed.

  [*5] All operations are not guaranteed for computers standard-equipped with a USB 2.0 Hi-Speed interface.
- **USB interface**

  USB 2.0 Hi-Speed performance requires Windows XP Service Pack 1, Windows 2000 Service Pack 4 or later with pre-installed USB 2.0 port.
- **The CD-ROM drive, or the CD-ROM drive that is shared online.**
- **Available hard-disk space**

  Windows XP/Windows 2000/Windows Me/Windows 98: 650 MB
- **Canon IJ Status Monitor cannot be used under the following conditions:**
  - When sharing this machine on a network (Windows Me, Windows 98)

Macintosh

- **Mac OS X v.10.2.4 or later: 128 MB RAM**
- **USB 2.0 Hi-Speed interface**

  USB 2.0 Hi-Speed[*6] operation can only be guaranteed under the environments below.
  OS: Mac OS X v.10.2.7 or later
  An internal USB 2.0 Hi-Speed port and a USB cable that comply with the USB 2.0 Hi-Speed standard (USB 2.0 Hi-Speed operation on the expansion board is not guaranteed.)

  [*6] Since the USB 2.0 Hi-Speed interface is fully upwardly compatible with USB Full-Speed (USB 1.1), it can be used at USB Full-Speed (USB 1.1).
- **USB interface**
- **USB 2.0 Hi-Speed performance requires Mac OS X version 10.2.7 or later with pre-installed USB 2.0 port.**
- **CD-ROM drive**
- **Available hard-disk space**

  Mac OS X v.10.2.4 or later: Approx. 550 MB
- **The following functions are not supported:**
  - Manual Duplex Printing
  - Photo Optimizer PRO
  - Poster Printing
  - Fit-to-Page Printing
  - Booklet Printing
  - Reverse Order Printing (supported with Mac OS X v.10.3.x)

Additional Systems Requirements for On-screen Manuals

Windows

- **Browser: Windows HTML Help Viewer**

  *** Microsoft Internet Explorer® 5.0 or later must be installed.**

  The on-screen manual may not be displayed properly depending on your operating system or Internet Explorer version. We recommend that you keep your system up to date with Windows Update.

Macintosh

- **Browser: Help Viewer**

  *** The on-screen manual may not be displayed properly depending on your operating system. We recommend that you keep your system up to date.**

Users in the U.S.A.

FCC Notice

PIXMA MP800: K10265

This device complies with Part 15 of the FCC Rules. Operation is subject to the following two conditions:

(1) This device may not cause harmful interference, and

(2) this device must accept any interference received, including interference that may cause undesired operation.

Note

This equipment has been tested and found to comply with the limits for a class B digital device, pursuant to Part 15 of the FCC Rules. These limits are designed to provide reasonable protection against harmful interference in a residential installation. This equipment generates, uses and can radiate radio frequency energy and, if not installed and used in accordance with the instructions, may cause harmful interference to radio communications. However, there is no guarantee that interference will not occur in a particular installation. If this equipment does cause harmful interference to radio or television reception, which can be determined by turning the equipment off and on, the user is encouraged to try to correct the interference by one or more of the following measures:

- Reorient or relocate the receiving antenna.
- Increase the separation between the equipment and receiver.
- Connect the equipment into an outlet on a circuit different from that to which the receiver is connected.
- Consult the dealer or an experienced radio/TV technician for help.

Use of shielded cable is required to comply with class B limits in Subpart B of Part 15 of the FCC Rules.

Warning

Do not make any changes or modifications to the equipment unless otherwise specified in this guide. If such changes or modifications should be made, you could be required to stop operation of the equipment.

Mercury Legislation

Hg LAMP(S) INSIDE THIS PRODUCT CONTAIN MERCURY AND MUST BE RECYCLED OR DISPOSED OF ACCORDING TO LOCAL, STATE OR FEDERAL LAWS

Canon U.S.A. Inc.
One Canon Plaza, Lake Success, NY 11042, U.S.A.
TEL No. (516) 328-5600

Canon U.S.A., Inc. Limited Warranty - U.S. Only

The limited warranty set forth below is given by Canon U.S.A., Inc. (“Canon USA”) with respect to the new or refurbished Canon-brand product (“Product”) packaged with this limited warranty, when purchased and used in the United States only.

The Product is warranted against defects in materials and workmanship under normal use and service (a) for a period of one (1) year from the date of original purchase when delivered to you in new condition in its original container or (b) for 90 days from the date of original purchase for refurbished Products. Defective parts or a defective Product returned to a Canon USA repair facility or a Canon USA Authorized Service Facility (“ASF”), and proven to be defective upon inspection, will be repaired, exchanged for new or comparable rebuilt parts, or exchanged for a refurbished Product, as determined by the Canon USA repair facility or the ASF. Warranty repair or replacement shall not extend the original warranty period of the Product. A dated proof of purchase is required at the time of warranty service. A copy of your dated bill of sale will satisfy this requirement. This warranty does not cover any accessories, or any consumables, such as paper or ink cartridges, as to which there shall be no warranty or replacement.

This limited warranty shall only apply if the Product is used in conjunction with compatible computers, peripheral equipment and software. Canon USA shall have no responsibility for such items except for compatible Canon brand peripheral equipment covered by a separate warranty (“Separate Warranty”). Repairs of such Canon brand peripheral equipment shall be governed by the terms of the Separate Warranty. Non-Canon brand equipment and software that may be distributed with the Product are sold “as is” and without warranty of any kind by Canon USA, including any implied warranty regarding merchantability or fitness for a particular purpose, and all such warranties are disclaimed. The sole warranty, if any, with respect to such non-Canon brand items is given by the manufacturer or producer thereof.

This limited warranty covers all defects encountered in normal use of the Product and does not apply in the following cases:

(a) Loss of or damage to the Product due to abuse, neglect, mishandling, improper packaging by you, alteration, accident, electrical current fluctuations, improper use, failure to follow operating or maintenance instructions in, or environmental conditions prescribed in, Canon USA's user's manual or other documentation, or services performed by someone other than a Canon USA repair facility or ASF. Without limiting the foregoing, dropping the Product, scratches, and abrasions will be presumed to have resulted from misuse, abuse or failure to operate the Product as set forth in the user's manual or other documentation for the Product.

(b) Use of parts or supplies (other than those sold by Canon USA) that cause damage to the Product or cause abnormally frequent service calls or service problems.

(c) If the Product has had its serial number or dating defaced, altered or removed.

ANY SYSTEM SOFTWARE (WHETHER FACTORY LOADED ON THE PRODUCT OR CONTAINED ON THE SOFTWARE DISKETTES OR CD-ROMS ENCLOSED WITH, OR ACCOMPANYING, THE PRODUCT), AND ANY UTILITY SOFTWARE, DISTRIBUTED WITH OR FOR THE PRODUCT, IS SOLD “AS IS” AND WITHOUT WARRANTY BY CANON USA. THE SOLE WARRANTY WITH RESPECT TO SUCH SOFTWARE IS CONTAINED IN THE SOFTWARE MANUFACTURER'S LICENSE AGREEMENT DISTRIBUTED THEREWITH, INCLUDING ANY LIMITATIONS AND DISCLAIMERS THEREON. PLEASE CONTACT CANON USA IMMEDIATELY IF YOU HAVE NOT RECEIVED A COPY OF THE SOFTWARE MANUFACTURER'S LICENSE AGREEMENT.

NO IMPLIED WARRANTY, INCLUDING ANY IMPLIED WARRANTY OF MERCHANTABILITY OR FITNESS FOR A PARTICULAR PURPOSE, APPLIES TO THE PRODUCT AFTER THE APPLICABLE PERIOD OF THE EXPRESS LIMITED WARRANTY STATED ABOVE, AND NO OTHER EXPRESS WARRANTY OR GUARANTY, EXCEPT AS MENTIONED ABOVE, GIVEN BY ANY PERSON OR ENTITY WITH RESPECT TO THE PRODUCT SHALL BIND CANON USA, OR

ITS ASF. (SOME STATES DO NOT ALLOW LIMITATIONS ON HOW LONG AN IMPLIED WARRANTY LASTS, SO THE ABOVE LIMITATION MAY NOT APPLY TO YOU.) CANON USA SHALL NOT BE LIABLE FOR LOSS OF REVENUES OR PROFITS, INCONVENIENCE, EXPENSE FOR SUBSTITUTE EQUIPMENT OR SERVICE, STORAGE CHARGES, LOSS OR CORRUPTION OF DATA, OR ANY OTHER SPECIAL, INCIDENTAL OR CONSEQUENTIAL DAMAGES CAUSED BY THE USE, MISUSE, OR INABILITY TO USE THE PRODUCT REGARDLESS OF THE LEGAL THEORY ON WHICH THE CLAIM IS BASED, AND EVEN IF CANON USA OR ITS ASF HAS BEEN ADVISED OF THE POSSIBILITY OF SUCH DAMAGES. NOR SHALL RECOVERY OF ANY KIND AGAINST CANON USA OR ITS ASF BE GREATER IN AMOUNT THAN THE PURCHASE PRICE OF THE PRODUCT CAUSING THE ALLEGED DAMAGE. WITHOUT LIMITING THE FOREGOING, YOU ASSUME ALL RISK AND LIABILITY FOR LOSS, DAMAGE OR INJURY TO YOU AND YOUR PROPERTY AND TO OTHERS AND THEIR PROPERTY ARISING OUT OF THE POSSESSION, USE, MISUSE, OR INABILITY TO USE THE PRODUCT SOLD BY CANON USA NOT CAUSED SOLELY AND DIRECTLY BY THE NEGLIGENCE OF CANON USA, OR ITS ASF. (SOME STATES DO NOT ALLOW THE EXCLUSION OR LIMITATION OF INCIDENTAL OR CONSEQUENTIAL DAMAGES, SO THE ABOVE EXCLUSION OR LIMITATION MAY NOT APPLY TO YOU.) THIS LIMITED WARRANTY SHALL NOT EXTEND TO ANYONE OTHER THAN THE ORIGINAL PURCHASER OF THE PRODUCT OR THE PERSON FOR WHOM IT WAS PURCHASED AS A GIFT, AND STATES YOUR EXCLUSIVE REMEDY.

Canon USA offers a range of customer technical support* options:

- Interactive troubleshooting, e-mail technical support, the latest driver downloads and answers to frequently asked questions (**www.canontechsupport.com**)
- Toll-free live technical support Monday-Saturday (excluding holidays) at **1-800-828-4040**
- Telephone Device for the Deaf (**TDD-1-866-251-3752**)
- Repair or Exchange Service Options:

In the event service is required for the Product during the limited warranty period, Canon USA offers two hardware support options:

Authorized Service Facility Carry-In / Mail-In Service

Canon USA's Carry-In/Mail-In Service provides repair or exchange, at Canon USA's option, through Canon USA's Authorized Service Facility (ASF) network. The name and telephone number of the ASF(s) near you may be obtained from Canon USA's Web site at: www.canontechsupport.com or by calling the Canon USA Customer Care Center at 1-800-828-4040, or any time while speaking to a technical support person. A Product covered by this limited warranty will be repaired or exchanged, as determined by Canon USA, and returned without charge by the ASF.

InstantExchange Service **

A Canon Customer Care Center or ASF technician will attempt to diagnose the nature of the problem and, if possible, correct it over the telephone. If the problem cannot be corrected over the telephone, and you elect the InstantExchange option, a reference number will be issued to you. You will be asked for the Product serial number and other information pertaining to your defective Product and for a ship-to location for the replacement Product (must include street address).

The Canon USA repair facility will ship out the replacement Product, via 2nd day Air freight service, prepaid by Canon USA. After receipt of the replacement Product (with instructions and a prepaid waybill), follow the enclosed instructions on how to ship the defective Product to the Canon USA repair facility. The defective Product must be returned in the shipping carton in which the replacement Product was packed and include the reference number, A COPY OF YOUR DATED PROOF OF PURCHASE (BILL OF SALE), and a complete explanation of the problem. DO NOT INCLUDE ANY OTHER ITEMS WITH THE DEFECTIVE PRODUCT IN THE RETURN SHIPPING CARTON, AND BE SURE TO RETAIN YOUR PRINTHEAD AND INK CARTRIDGE(S) AND TANK(S).

InstantExchange Service expedites, usually by the second business day, the exchange of a defective Product with a replacement Product, which will normally be shipped the same day if your request for this service is by 3 p.m. E.T. Monday through Friday, except holidays (three (3) business

day InstantExchange Service for Alaska and Hawaii). Canon USA does not guarantee expedited shipping service in the event of the occurrence of factors beyond its reasonable control. The replacement Product you receive may be a refurbished or reconditioned unit and will be covered for the balance of the period remaining on your original limited warranty. NOTE THAT BY USING THIS SERVICE YOU WILL KEEP THE REPLACEMENT PRODUCT THAT IS SENT TO YOU. CANON USA WILL RETAIN THE DEFECTIVE PRODUCT THAT YOU ORIGINALLY PURCHASED, WHICH SHALL BECOME THE PROPERTY OF CANON USA. InstantExchange warranty program service is available only during the express limited-warranty period for your Product and only in the continental United States, Alaska and Hawaii during such period.

This limited warranty gives you specific legal rights, and you may also have other rights, which vary from state to state.

* Support program specifics are subject to change without notice.

** InstantExchange warranty service is subject to the availability of refurbished or new replacement units.

Canon U.S.A., Inc.
One Canon Plaza
Lake Success, NY 11042
USA

©2005 Canon U.S.A., Inc. Canon is a registered trademark of Canon Inc. in the United States and may also be a registered trademark in other countries.

Users in Canada

Caution

- This Class B digital apparatus meets all requirements of the Canadian Interference-Causing Equipment Regulations.
- Cet appareil numérique de la classe B respecte toutes les exigences du Règlement sur le matériel brouilleur du Canada.

Customer Technical Supports

Canon Canada Inc., offers a full range of customer technical support* options:

- For interactive troubleshooting, e-mail technical support, the latest driver downloads and answers to frequently asked questions (www.canon.ca)
- Automated interactive telephone support on most current products 24 hours, 7 days a week (1-800-OK-CANON)
- Free live technical support Mon - Fri 9am-8pm EST (excluding holidays) for products still under warranty (1-800-OK-CANON)
- The location of the authorized service facility nearest you (1-800-OK-CANON) If the problem cannot be corrected by using one of the above technical support options, repair options are available at the time of your call to the Free live technical support number above or via the website at www.canon.ca

* Support program specifics are subject to change without notice.

CANON CANADA INC.
1-800-OK-CANON (1-800-652-2666)
24 HOURS A DAY, SEVEN DAYS A WEEK
http://www.canon.ca

Index

Numerics

▲▼◀▶ button 16

A

Access Lamp 14
Alarm Lamp 16
Appendix 144
Auto Sheet Feeder 12
Auto Sheet Feeder Lamp 16

B

Back button 16
Before Printing 12
Black button 16

C

Card Slot 14
Card Slot Cover 12
Cassette 13
Cassette Lamp 16
Changing the Machine Settings 91
  adjust contrast 94
  bluetooth settings 93
  date display 93
  language selection 94
  load settings 94
  power save setting 94
  print settings 92
  read/write attribute 94
  reset setting 94
  save settings 94
  slide show setting 94
  wireless print settings 93
Changing the Print Settings 33
  copy mode 34
  memory card and photo/film modes 35
Cleaning
  interior 109
  platen glass and document cover 107
  roller 108
CLI-8BK Black 95
CLI-8C Cyan 95
CLI-8M Magenta 95
CLI-8Y Yellow 95
Color button 16
Components 12
COPY button 15
Copying 37
  2-on-1 copy 41
  4-on-1 copy 41, 42
  auto intensity 39
  borderless copy 42
  fit-to-page 38
  image repeat 43
  Intensity 37
  preset ratio 38
  reducing or enlarging 38
  two-sided copy 40
  zoom 38
Cover Guide 12

D

Device settings 90
Direct Print Port 12
Document Cover 12
Duplexing Transport Unit 14

F

FAU (Film Adapter Unit) Protective Sheet 13
FAU Lamp 13
Feed Switch button 16

I

Ink Tank Lamp 14
Inner Cover 14
IrDA Port 12

L

LCD (Liquid Crystal Display) 16
Loading Documents 18
Loading Paper
  auto sheet feeder 24
  cassette 28
  recommended paper and requirements 19

M

Maintenance
  cleaning your machine 107
Memory Card 15
  inserting 45
  removing 47
  supported by this machine 44
MEMORY CARD button 15
Menu button 16

N

Nozzle Check Pattern
  examining 103
  printing 102

O

OK button 16
ON/OFF button 15
Open button 13
Operation Panel 13, 15

P

Paper Guide 12
Paper Output Tray 13
Paper Support 12

Performing Bluetooth Communication 80
Performing Infrared Communication 78
PGI-5BK Black 95
Photo Index Sheet button 16
Photo Printing from Photo or Film 60
multi-photo print 68
print all photos 69
scanning a film 62
scanning a photo 60
single-photo print 66
sticker print 68
trimming 68
PHOTO/FILM button 15
Platen Glass 13
Power Connector 15
Power save setting 94
Print Head
adjusting the print head manually 115
aligning print head automatically 106
cleaning 104
deep cleaning 105
Print Head Holder 14
Print Head Lock Lever 14
Printing Area 144
Printing from a Memory Card 44
captured info 55
DPOF print 54
layout print 52
multi-photo print 49
photo index print 54
photo index sheet 56
print all photos 54
search 50
single-photo print 47
sticker print 53
trimming 51
Printing from Your Computer 82
Macintosh 84
Windows 82
Printing Photographs Directly from a Compliant Device 70
Canon Bubble Jet Direct 75
Connecting 70
PictBridge 72
Printing Photographs from a Wireless Communication Device 77
bluetooth 80
infrared 78

R

Reading from and Writing to a Memory Card 90
Rear Cover 15
Replacing Ink Tanks 96
Routine Maintenance 95
Replacing Ink Tanks 96

S

Safety Precautions 5
SCAN button 15
Scanner Lock Switch 13
Scanning Images
attach to E-mail 89
open with application 89
save as PDF file 89
save to PC 89
scan film and save 89
Scanning Unit (Printer Cover) 14
Search button 16
Settings button 16
Specifications
Canon Bubble Jet Direct 148
copy 148
general 147
PictBridge 149
scan 149
Stop/Reset button 16
Systems Requirements 150

T

Trimming button 16
Troubleshooting 111
paper jams 125
Turning the Machine ON and OFF 17

U

USB Connector (for computer) 15

This product uses the following copyrighted software:

exit.c

Copyright © 1990 The Regents of the University of California.
All rights reserved.

Redistribution and use in source and binary forms are permitted provided that the above copyright notice and this paragraph are duplicated in all such forms and that any documentation, advertising materials, and other materials related to such distribution and use acknowledge that the software was developed by the University of California, Berkeley. The name of the University may not be used to endorse or promote products derived from this software without specific prior written permission.
THIS SOFTWARE IS PROVIDED "AS IS" AND WITHOUT ANY EXPRESS OR IMPLIED WARRANTIES, INCLUDING, WITHOUT LIMITATION, THE IMPLIED WARRANTIES OF MERCHANTABILITY AND FITNESS FOR A PARTICULAR PURPOSE.

environ.c

Copyright © 1995, 1996 Cygnus Support.
All rights reserved.

Redistribution and use in source and binary forms are permitted provided that the above copyright notice and this paragraph are duplicated in all such forms and that any documentation, advertising materials, and other materials related to such distribution and use acknowledge that the software was developed at Cygnus Support, Inc. Cygnus Support, Inc. may not be used to endorse or promote products derived from this software without specific prior written permission.
THIS SOFTWARE IS PROVIDED "AS IS" AND WITHOUT ANY EXPRESS OR IMPLIED WARRANTIES, INCLUDING, WITHOUT LIMITATION, THE IMPLIED WARRANTIES OF MERCHANTABILITY AND FITNESS FOR A PARTICULAR PURPOSE.

impure.c
string.h
_ansi.h

Copyright © 1994, 1997 Cygnus Solutions.
All rights reserved.

Redistribution and use in source and binary forms are permitted provided that the above copyright notice and this paragraph are duplicated in all such forms and that any documentation, advertising materials, and other materials related to such distribution and use acknowledge that the software was developed at Cygnus Solutions. Cygnus Solutions may not be used to endorse or promote products derived from this software without specific prior written permission.
THIS SOFTWARE IS PROVIDED "AS IS" AND WITHOUT ANY EXPRESS OR IMPLIED WARRANTIES, INCLUDING, WITHOUT LIMITATION, THE IMPLIED WARRANTIES OF MERCHANTABILITY AND FITNESS FOR A PARTICULAR PURPOSE.

Ordering Information

For additional supplies, use the following descriptions and order numbers.

Description	Order #
Ink Tanks	
PGI-5 Black	0628B002
CLI-8 Black	0620B002
CLI-8 Cyan	0621B002
CLI-8 Magenta	0622B002
CLI-8 Yellow	0623B002
Canon Specialty Papers	
Photo Paper Plus Glossy (4" x 6" / 20 sheets)	7980A007
Photo Paper Plus Glossy (4" x 6" / 50 sheets)	7980A012
Photo Paper Plus Glossy (4" x 6" / 120 sheets)	7980A022
Photo Paper Plus Glossy (5" x 7" / 20 sheets)	7980A019
Photo Paper Plus Glossy (8.5" x 11" / 20 sheets)	7980A006
Photo Paper Plus Double Sided (5" x 7" / 10 sheets)	9981A006
Photo Paper Plus Double Sided (8.5" x 11" / 10 sheets)	9981A005
Photo Paper Plus Double Sided Album Kit (5" x 7")	0041B005
Photo Paper Plus Double Sided Album Kit (8.5" x 11")	0041B006
Photo Paper Plus Semi-Gloss (4" x 6" / 50 sheets)	8386A010
Photo Paper Plus Semi-Gloss (8.5" x 11" / 20 sheets)	8386A007
Photo Paper Pro for Borderless Printing (4" x 6" / 20 sheets)	1029A014
Photo Paper Pro for Borderless Printing (4" x 6" / 75 sheets)	1029A027
All Occasion Photo Cards (4" x 8" / 50 sheets)	1029A055
Photo Paper Pro (8.5" x 11" / 15 sheets)	1029A004
Photo Paper Pro (8.5" x 11" / 30 sheets)	1029A028
Matte Photo Paper (8.5" x 11" / 50 sheets)	7981A004
Photo Paper Glossy (4" x 6" / 50 sheets)	0775B021
Photo Paper Glossy (4" x 6" / 100 sheets)	0775B022
Photo Paper Glossy (8.5" x 11" / 50 sheets)	0775B023
Photo Paper Glossy (8.5" x 11" / 100 sheets)	0775B024
Glossy Photo Paper Credit Card Size	9157A023
Photo Stickers	0001C001
Transparencies (8.5" x 11" / 50 sheets)	1043A004
High Resolution Paper (8.5" x 11" / 100 sheets)	1033A011

Call 1-800-OK-CANON to locate a dealer near you, or visit the Canon eStore at **www.estore.usa.canon.com**.

ENERGY STAR

© 2006 Canon U.S.A., Inc. Canon is a registered trademark of Canon Inc. in the United States and may be a registered trademark or trademarks in other countries. All other product and brand names are trademarks of their respective owners. As an ENERGY STAR® partner, Canon U.S.A., Inc. has determined that this product meets the ENERGY STAR® guidelines for energy efficiency.

Canon

8	5	8	8	8
BK	PGBK	Y	M	C
CLI-8BK	PGI-5BK	CLI-8Y	CLI-8M	CLI-8C

QT5-0044-V08 XXXXXXXX ©CANON INC.2005 PRINTED IN THAILAND