Canon

Exif Print BUBBLE JET DIRECT PictBridge Wi Fi CERTIFIED

Photo Printer

PIXMA iP5200R Series

Quick Start Guide

Getting Help from Canon

Help Us Help You Better

Before you contact Canon, please record the following information.

Serial Number (located on the inside of the printer):_____

Model Number (located on the top of the printer):_____

Printer Driver CD-ROM number (located on the CD-ROM):_____

Purchase Date:_____

Customer Technical Support Sequence*

1. **Internet** — **www.canontechsupport.com**
   For quick and comprehensive self-help in an intuitively guided interactive troubleshooting environment, the place to start is our helpful tech support web site. In addition, the latest driver downloads, answers to frequently asked questions, product information, and "where to buy" instructions are found here.

2. **Email Tech Support** — **www.canontechsupport.com**
   For individual attention to a special issue, try emailing our friendly technical engineers, specially trained to communicate quick, easy, and logical solutions to your inquiries within 24 hours.

3. **Toll-Free Live Tech Support** — **(1-800-828-4040)**
   This option provides live telephone technical support, free of service charges, Monday-Saturday (excluding holidays), during your product's 1 year limited warranty period. Telephone Device for the Deaf (TDD) support is available at **(1-866-251-3752)**.

4. **Extended Service and Support** — **www.canonesp.com**
   Canon CarePAK Extended Service Plan is a cost-attractive and easy-to-use extended service program that provides up to three full years of service and support coverage at a very attractive price. CarePAK offers toll-free Canon technical support and includes Canon's superb InstantExchange product replacement program. For further information about extending your Canon service and support, call (1-800-385-2155), or visit our Web site at **www.canonesp.com**. CarePAK must be purchased during your product's warranty period.

   For more information and updated program specifics, please visit our web site at **www.canontechsupport.com**.

* Support program specifics are subject to change without notice.

Canon

PIXMA iP5200R

Photo Printer

Quick Start Guide

Canon PIXMA iP5200R Photo Printer Quick Start Guide.

Copyright

This manual is copyrighted by Canon U.S.A., Inc. with all rights reserved. Under the copyright laws, this manual may not be reproduced in any form, in whole or in part, without the prior written consent of Canon U.S.A., Inc.

© 2005 Canon U.S.A., Inc.

Disclaimer

Canon U.S.A., Inc. has reviewed this manual thoroughly in order that it will be an easy-to-use guide to your Canon PIXMA iP5200R Photo Printer. All statements, technical information and recommendations in this manual and in any guides or related documents are believed reliable, but the accuracy and completeness thereof are not guaranteed or warranted, and they are not intended to be, nor should they be understood to be, representation or warranties concerning the products described.

Specifications are subject to change without notice.

As an ENERGY STAR partner, Canon U.S.A., Inc., has determined that this product meets the ENERGY STAR guidelines for energy efficiency.

All information regarding non-Canon products was compiled from publicly available information. No representation is made regarding the accuracy thereof.

Trademarks

- “Windows” and “Internet Explorer” are trademarks of Microsoft Corporation, registered in the United States and other countries.
- “Macintosh” and “Mac” are trademarks of Apple Computer, Inc., registered in the U.S. and other countries.
- “Wi-Fi” is a registered trademark of the Wi-Fi Alliance. The “Wi-Fi CERTIFIED” logo is a certification mark of the Wi-Fi Alliance.

Canon U.S.A., Inc.
One Canon Plaza
Lake Success, NY 11042

Contents

Basic Printing

Turning on the Printer 2
Turning off the Printer 3
Loading Paper 4
Using Specialty Media 18
Printing with Windows 20
Printing with Macintosh 23
Canceling Printing 26

Advanced Printing

Printing Photographs Directly from a PictBridge Compliant Device 28
Accessing the Printer Driver (Windows) 35
Using the Bundled Software 36

Printing Maintenance

Replacing an Ink Tank 37
When Printing Becomes Faint or Colors are Incorrect 46
Printing the Nozzle Check Pattern 47
Print Head Cleaning 52
Print Head Deep Cleaning 56
Aligning the Print Head 60

Troubleshooting

Cannot Install the Printer Driver 65
Cannot Connect to PC Properly 66
Print Results Not Satisfactory or Contains Errors 67
Troubleshooting Printer Hardware 70
Paper Does Not Feed Properly 72
Paper Jams 73
Handling Error Messages 77
An Error Message Appears on the Screen 79
Cannot Print Properly from the Digital Camera 82

Appendix

Specifications 87
Safety Precautions 92
Regulatory Information 94
CANON U.S.A., INC. LIMITED WARRANTY --- (USA Only) 95

Index 97

Basic Printing

Note This *Quick Start Guide* describes some of the features of your printer and how to use them. For more information, view the iP5200R *User's Guide* and *Printer Driver Guide* installed on your computer, or use the online help within your printer driver interface:

Windows

While in the printer's properties window, press the **F1** key, or click ? in the upper right corner. Then click the feature you want to know more about, or click the **Help** button when displayed.

Macintosh

While in the **Page Setup** dialog box or **Print** dialog box, click ? in the lower left corner.
Clicking ? provides detailed information about each setting.
When the Help window appears, select your desired topic.

Turning on the Printer

1 **Press the POWER button.**

The **POWER** lamp flashes green while the printer warms up and changes to steady (non-flashing) when the printer is ready.

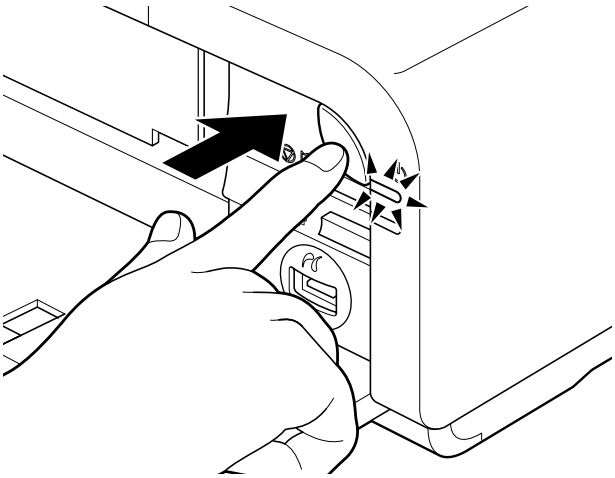

Important If the **ALARM** lamp begins flashing orange, refer to "**Handling Error Messages**" on page 77.

Turning off the Printer

1 **To turn off the printer, press the POWER button.**

When the **POWER** lamp stops blinking, the printer is turned off.

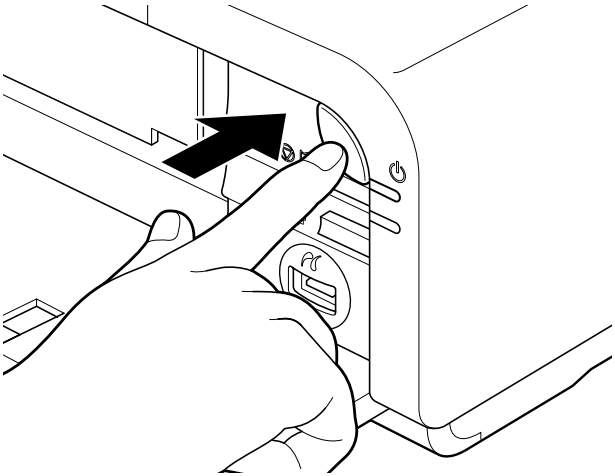

Important **About the Power Plug**

When removing the power plug after turing off the printer, be sure to check that the **POWER** lamp is not lit. If the power plug is removed from the wall outlet with the **POWER** lamp lit or blinking green, the printer cannot protect its print heads and may be unable to print.

Loading Paper

This section describes how to load paper in the Auto Sheet Feeder and the Cassette.

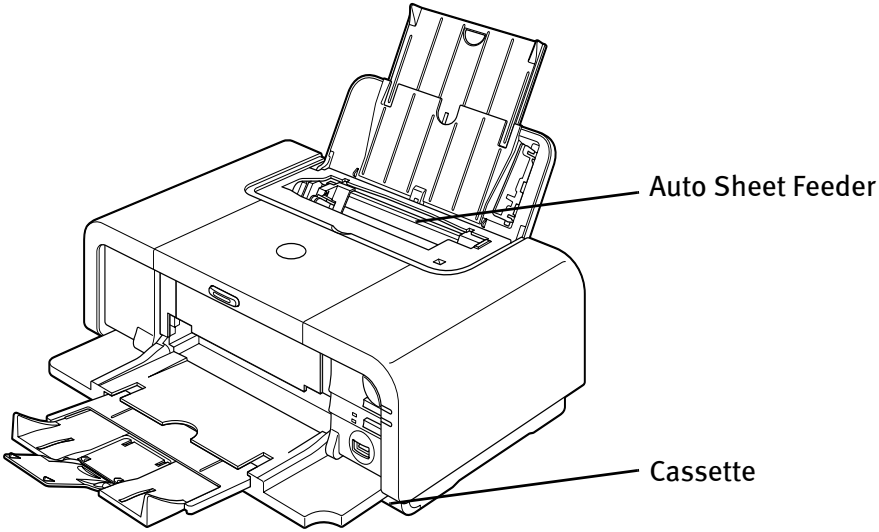

■ Print Media to Avoid

Do not use the following types of paper. Using such paper will not only produce unsatisfactory results, but can also cause the printer to jam or malfunction.

- Folded, curled or wrinkled paper
- Damp paper
- Excessively thin paper (less than 64 gsm or 17 lb)
- Excessively thick paper* (more than 105 gsm or 28 lb)

  * non-Canon branded paper
- Picture postcards
- Postcards affixed with photos or stickers
- Envelopes with double flaps
- Envelopes with sticker flaps
- Envelopes with an embossed or treated surface
- Any type of paper with holes

Using the Auto Sheet Feeder and the Cassette

You can load paper in both the Auto Sheet Feeder and Cassette.

Loading paper in the Auto Sheet Feeder is easy, and is convenient if you frequently switch to and print on various sizes or types of paper.

Loading paper in the Cassette allows you to print without reloading paper for each job. This is convenient for loading a certain type of paper, such as plain paper, you regularly print onto.

Loading paper in both the Auto Sheet Feeder and Cassette makes the following paper feed methods available:

* Legal-sized paper and 2.13" x 3.39"/ 54.0 x 86.0 mm size paper, and Photo Stickers are not loadable in the Cassette.

- Changing the paper source to feed different types/sizes of paper

  If you load plain paper in the Cassette and photo paper in the Auto Sheet Feeder, changing the paper source allows you to print on both types of paper without removing and reloading paper. To change the paper source, use the Paper Feed Switch on the printer or printer driver.

  You can also specify the type/size of paper to be fed from the Cassette for regular use with the printer driver. For example, you can specify that Letter-sized plain paper is always fed from the Cassette whenever you print.

Note For information on the printer driver settings, refer to the *Printer Driver Guide*.

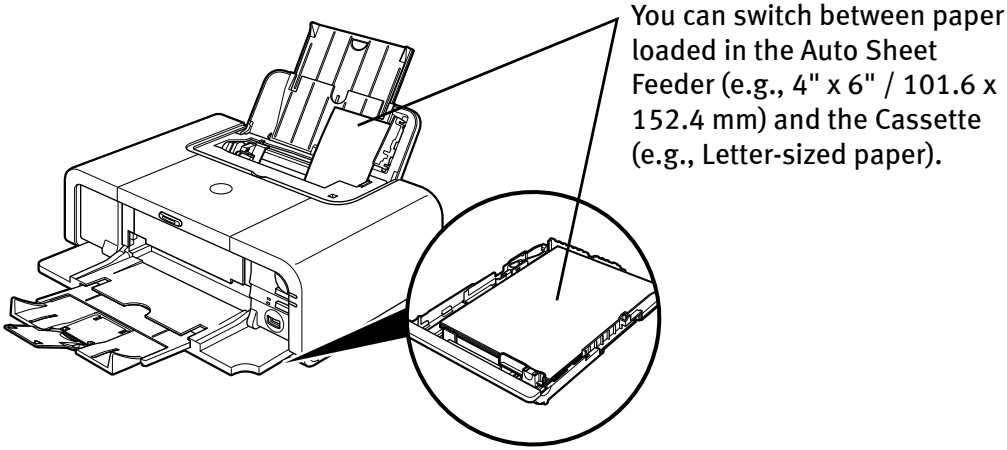

- Continuous printing on the same type/size of paper by using both the Auto Sheet Feeder and Cassette together

  If the Auto Sheet Feeder or Cassette runs out of paper, the paper source automatically switches to the other one. This is useful for printing onto a large volume of paper. To use this feature, you need to configure the printer driver beforehand.

Note For information on the printer driver settings, refer to the *Printer Driver Guide*.

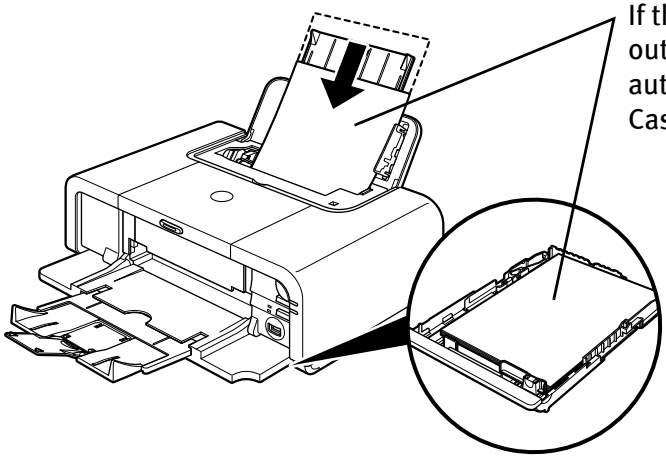

- Choosing the paper source to match the location of the printer

  You can use just the Auto Sheet Feeder or Cassette according to the location of the printer.

  For example, if you intend to install the printer in a small place, such as on a shelf with minimal space, you can use just the Cassette for printing.

Note Legal-sized paper and 2.13" x 3.39"/ 54.0 x 86.0 mm size paper, and Photo Stickers are not loadable in the Cassette.
If you intend to use only the Cassette, check any usage restrictions in advance.

■ Loading Plain Paper in the Auto Sheet Feeder

Note
- For detailed information on the specialty media Canon provides for use with its various printers, refer to "**Using Specialty Media**" on page 18.
- See "Printing Media" in the *User's Guide* for detailed instructions on how to load specialty media into the printer.

1 **Flatten the four corners of the paper before loading it.**

Important When paper is curled, hold the opposing curled corners and gently bend them in the opposite direction until the paper becomes completely flat.

2 **Prepare to load paper.**

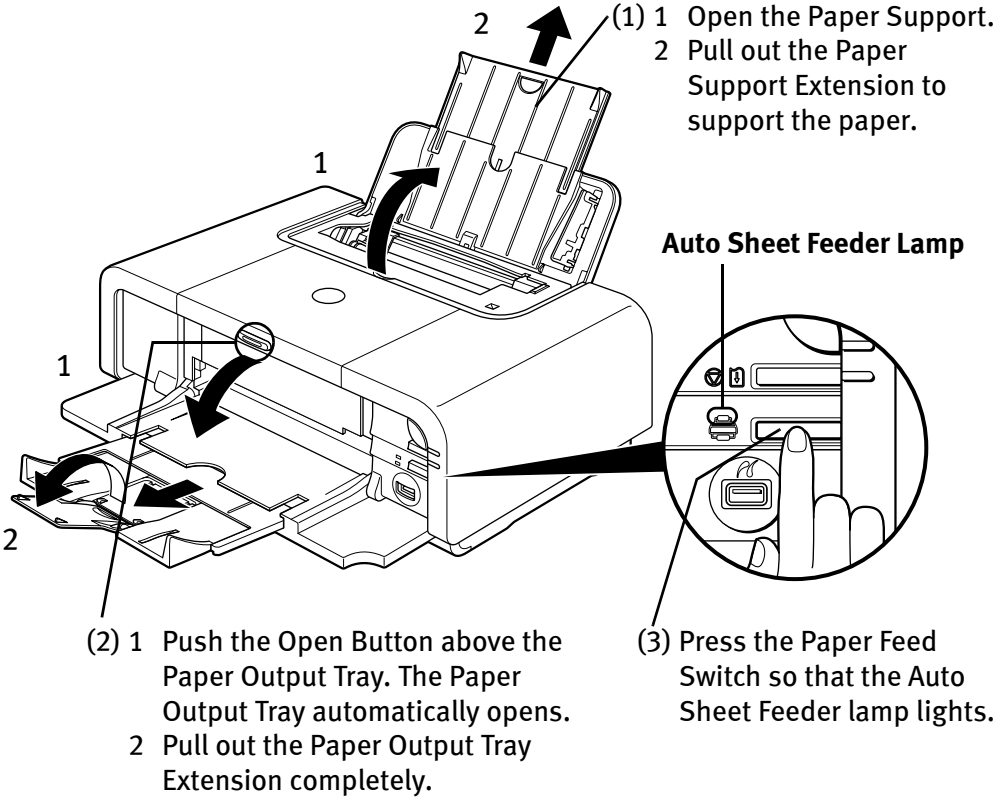

Note You can also select the paper source with the printer driver. For details, refer to the *Printer Driver Guide*.

3 Load the paper.

Load Limit Mark
Do not load beyond this Load Limit Mark.

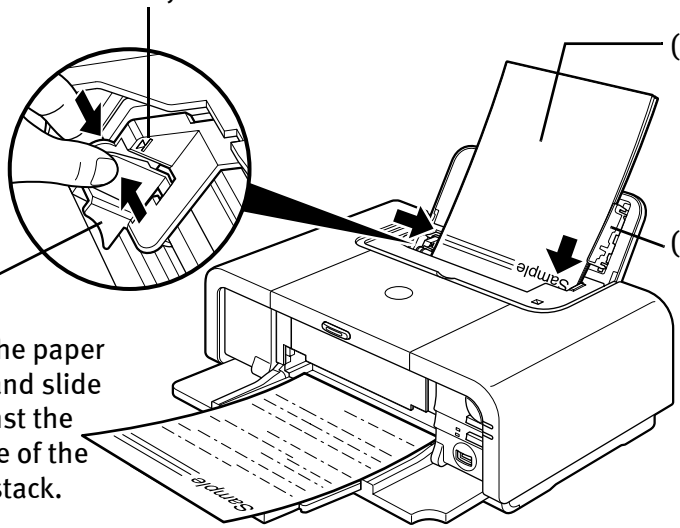

(1) Load the paper into the Auto Sheet Feeder with the print side facing UP.

(2) Align the paper stack against the Cover Guide on the right side of the Paper Support.

Important Ensure that the Cover Guide stands when you load paper in the Auto Sheet Feeder.

(3) Pinch the paper guide and slide it against the left side of the paper stack.

Note

- You can use general copy paper or Canon's Super White Paper.
- You can load up to 150 sheets of plain paper (64 gsm or 17 lb, 13 mm or 0.52 inches in height) in the Auto Sheet Feeder. However, depending on the environment in which it is used (high temperature/high humidity/low temperature/low humidity), some types of plain paper may not feed correctly. If this happens, reduce the number of pages loaded to about the half the recommended maximum (stack approx. 5 mm or 0.2 inches high).
- Do not stack more than 50 sheets in the Paper Output Tray.
- Do not touch the printed surfaces until the ink dries. For specific drying times, refer to the instructions packaged with your media.

Loading Envelopes

Use either European DL or US Comm. Env. #10 size envelopes.

The address is rotated automatically to match the direction of the envelope when printing.

Important

- Do not use envelopes with embossed or treated surfaces, a double flap, pressure seals or sticker flaps.
- Select either **European DL Env.** or **US Comm. Env. #10** in the printer driver according to the envelope size you are using. If you do not, the address will be printed in the wrong direction.

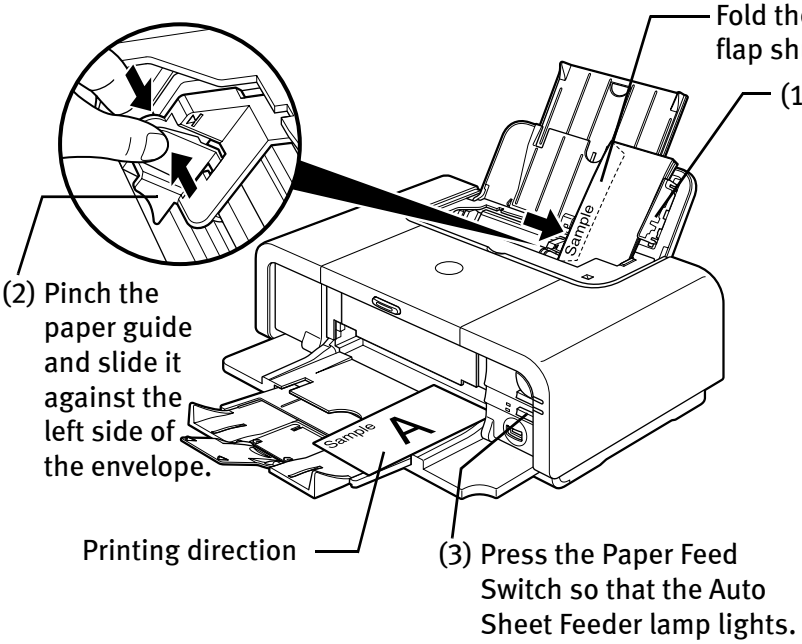

Important Ensure that the Cover Guide stands when you load paper in the Auto Sheet Feeder.

Note A maximum of 10 envelopes can be loaded at once.

(4) Select **Envelope** in **Media Type**, and then select **European DL Env.** or **US Comm. Env. #10** in **Page Size**.

For a detailed description of the printer driver settings, refer to "**Printing with Windows**" on page 20, "**Printing with Macintosh**" on page 23.

■ Loading Other Small-Sized Paper in the Auto Sheet Feeder

Important Cutting plain paper to 4" x 6" / 101.6 mm x 152.4 mm, 5" x 7" / 127.0 x 177.8 mm, or 2.13" x 3.39" / 54.0 x 86.0 mm (Credit Card) size for a trial printing can cause paper jams.

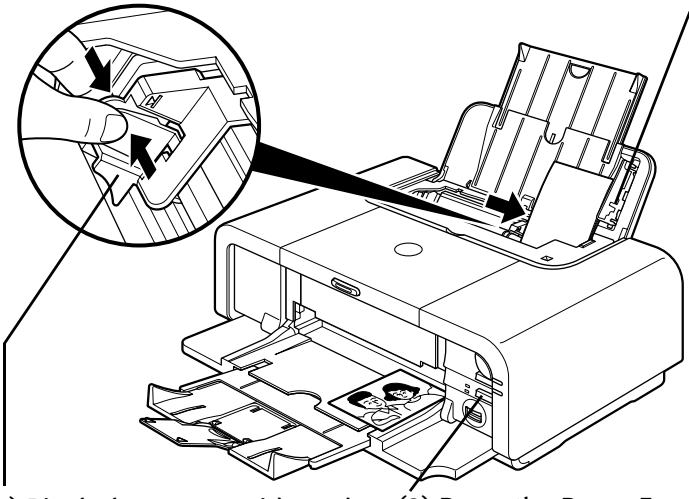

(1) Load the paper into the Auto Sheet Feeder with the print side facing UP and align the Cover Guide on the right side of the Paper Support.

Important Ensure that the Cover Guide stands when you load paper in the Auto Sheet Feeder.

Note

- Load the paper lengthways regardless of the direction of the document.
- You can load up to 20 sheets of 4" x 6" or 2.13" x 3.39" (Credit Card) -sized paper; 10 sheet of 5" x 7"-sized paper.

(2) Pinch the paper guide and slide it against the left side of the paper stack.

(3) Press the Paper Feed Switch so that the Auto Sheet Feeder lamp lights.

(4) Select **4 x 6 in 101.6 x 152.4 mm**, **5 x 7 in 127.0 x 177.8 mm**, or **Credit Card 2.13 x 3.39 in 54 x 86 mm** from **Paper Size** in the printer driver.

For a detailed description of the printer driver settings, refer to "**Printing with Windows**" on page 20, or "**Printing with Macintosh**" on page 23.

Important Always load paper in portrait orientation. Loading paper in landscape orientation can cause the paper to be jammed.

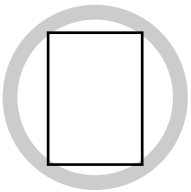

Portrait

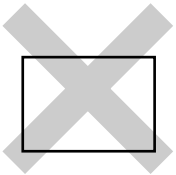

Landscape

Note We recommend using genuine Canon photo media when printing photographs.
See "**Using Specialty Media**" on page 18.

■ Loading Plain Paper in the Cassette

Ensure that the paper is loadable in the Cassette. Legal-sized paper and 2.13" x 3.39" / 54.0 x 86.0 mm size paper, and Photo Stickers are not loadable in the Cassette.

Note

- For detailed information on the specialty media Canon provides for use with its various printers, refer to "**Using Specialty Media**" on page 18.
- See "Printing Media" in the *User's Guide* for detailed instructions on how to load specialty media into the printer.

1 **Flatten the four corners of the paper before loading it.**

Important When paper is curled, hold the opposing curled corners and gently bend them in the opposite direction until the paper becomes completely flat.

2 **Prepare to load paper.**

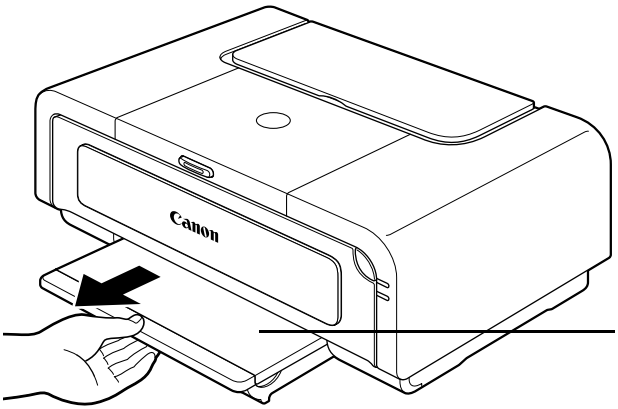

(1) Pull out the Cassette from the printer.

(2) Remove the Cover on the Cassette.

3 Adjust the size of the Cassette.

When loading A5- or larger sized paper (nonstandard-size paper: 203 mm / 8 inches or more in length), extend the Cassette.

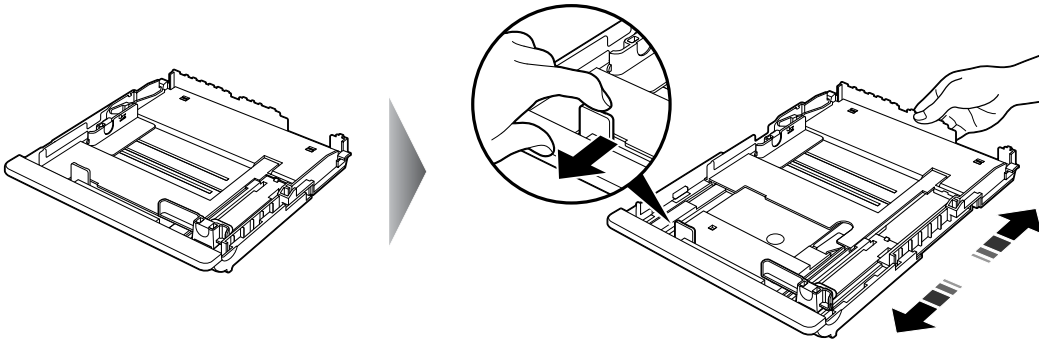

When loading 5" x 7"- or smaller sized paper (nonstandard-size paper: less than 203 mm/ 8 inches in length), do not extend the Cassette.

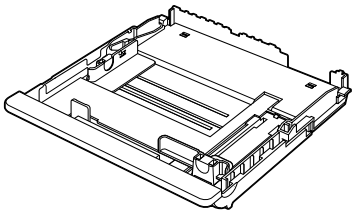

Note Legal-sized paper and 2.13" x 3.39"/ 54.0 x 86.0 mm size paper, and Photo Stickers are not loadable in the Cassette.

4 Load the paper. (Print side facing DOWN)

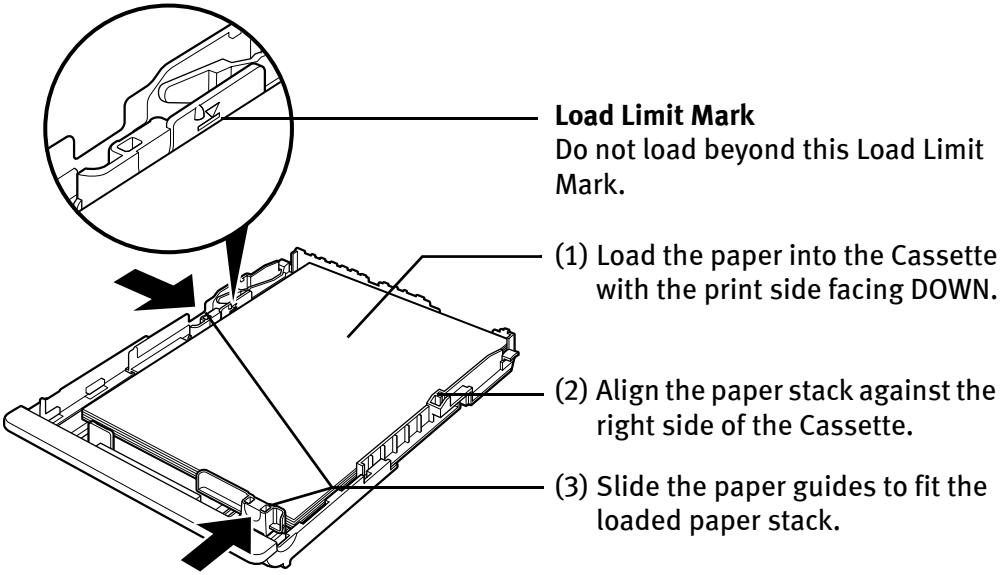

Note

- You can use general copy paper or Canon's Super White Paper.
- You can load up to 150 sheets of plain paper (64 gsm or 17 lb, 13 mm or 0.52 inches in height) in the Cassette. However, do not stack more than 50 sheets in the Paper Output Tray.

5 Insert the Cassette into the printer.

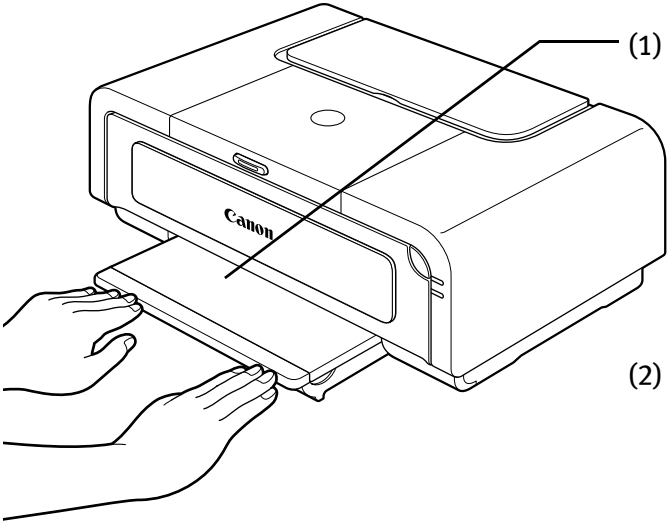

(1) Set the Cover on the Cassette.

(2) Insert the Cassette into the printer.
Push the Cassette all the way into the printer.

Note If the Cassette has been extended to accommodate paper sizes larger than 5" x 7", the front edge of the cassette will extend beyond the front of the printer.

6 Prepare the Paper Output Tray.

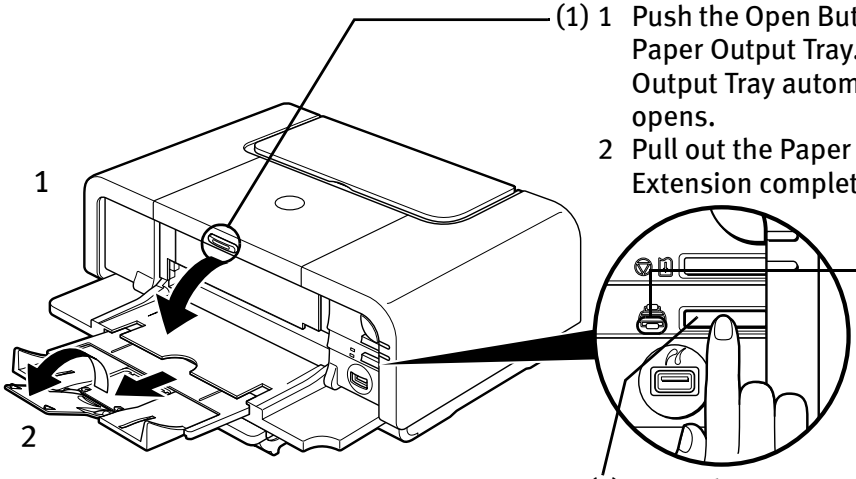

(1) 1 Push the Open Button above the Paper Output Tray. The Paper Output Tray automatically opens.
2 Pull out the Paper Output Tray Extension completely.

(2) Press the Paper Feed Switch so that the Cassette lamp lights.

Note
- You can also select the paper source with the printer driver. For details, refer to the *Printer Driver Guide*.
- Do not touch the printed surfaces until the ink dries. For specific drying times, refer to the instructions packaged with your media.

■ Loading Envelopes

Use either European DL or US Comm. Env. #10 size envelopes.

The address is rotated automatically to match the direction of the envelope when printing.

Important
- Do not use envelopes with embossed or treated surfaces, a double flap, pressure seals or sticker flaps.
- Select either **European DL Env.** or **US Comm. Env. #10** in the printer driver according to the envelope size you are using. If you do not, the address will be printed in the wrong direction.

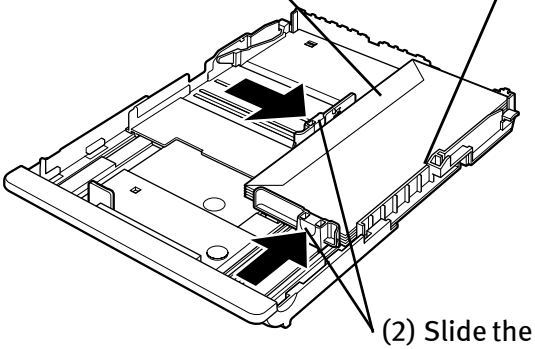

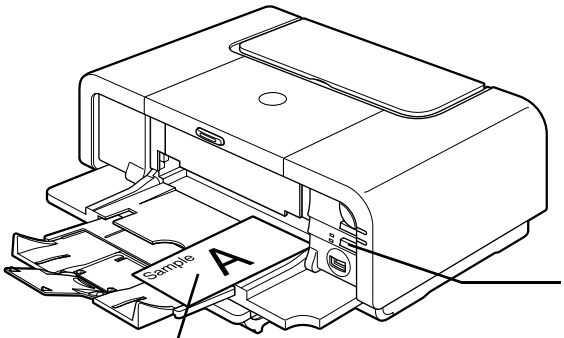

(3) Press the Paper Feed Switch so that the Cassette lamp lights.

Printing direction

(4) Select **Envelope** in **Media Type**, and then select **European DL Env.** or **US Comm. Env. #10** in **Page Size**.

For a detailed description of the printer driver settings, refer to "**Printing with Windows**" on page 20, "**Printing with Macintosh**" on page 23.

■ Loading 4" x 6" or 5" x 7"-Sized Paper in the Cassette

Important

- Do not leave photo paper, such as Photo Paper Pro, in the Cassette for a long time. This may cause paper discoloration due to natural aging.
- Cutting plain paper to 4" x 6" / 101.6 mm x 152.4 mm or 5" x 7" / 127.0 x 177.8 mm size for a trial printing can cause paper jams.

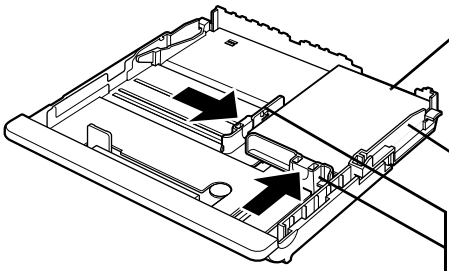

(1) Load the paper into the Cassette with the print side facing DOWN.

Note

- Do not extend the Cassette.
- Load the paper lengthways regardless of the direction of the document.
- You can load up to 20 sheets of 4" x 6"-sized paper or 10 sheets of 5" x 7"-sized paper.

(2) Align the paper stack against the right side of the Cassette.

(3) Slide the paper guides to fit the loaded paper stack.

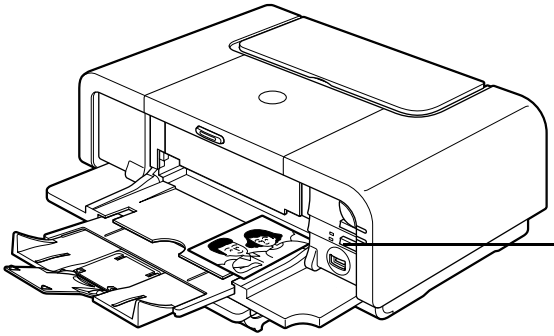

(4) Press the Paper Feed Switch so that the Cassette lamp lights.

(5) Select **4 x 6 in 101.6 x 152.4 mm** or **5 x 7 in 127.0 x 177.8 mm** from **Paper Size** in the printer driver.

For a detailed description of the printer driver settings, refer to "**Printing with Windows**" on page 20, or "**Printing with Macintosh**" on page 23.

Important Always load paper in portrait orientation. Loading paper in landscape orientation can cause the paper to be jammed.

Portrait **Landscape**

Note We recommend using genuine Canon photo media when printing photographs.
See "**Using Specialty Media**" on page 18.

Using Specialty Media

Canon recommends that you use genuine Canon media to ensure optimal print quality.

■ Photo Quality Media

- High Resolution Paper
- Glossy Photo Paper
- Matte Photo Paper
- Photo Paper Plus Double Sided
- Photo Paper Plus Glossy
- Photo Paper Plus Semi-gloss
- Photo Paper Pro
- Photo Stickers

■ Media Suited for Business Documents

- High Resolution Paper
- Transparencies

Canon Specialty Media

Media Type	Paper Support Load Limit		Printer Driver Setting for Media Type
	Auto Sheet Feeder	Cassette	
High Resolution Paper	Up to 80 sheets	Up to 80 sheets	High Resolution Paper
Super White Paper	Up to 13 mm or 0.52 inches	Up to 13 mm or 0.52 inches	Plain Paper
Glossy Photo Paper	Letter: up to 10 sheets 4" x 6": up to 20 sheets 2.13" x 3.39": up to 20 sheets	Letter: up to 10 sheets 4" x 6": up to 20 sheets 2.13" x 3.39": not loadable*3	Glossy Photo Paper
Matte Photo Paper	Letter: up to 10 sheets 4"x 6": up to 20 sheets	Letter: up to 10 sheets 4"x 6": up to 20 sheets	Matte Photo Paper
Photo Paper Plus Double Sided*1	Letter: up to 10 sheets 5" x 7": up to 10 sheets	Letter: up to 10 sheets 5" x 7": up to 10 sheets	Photo Paper Plus Double Sided
Photo Paper Plus Glossy*1	Letter: up to 10 sheets 5" x 7": up to 10 sheets 4" x 6": up to 20 sheets	Letter: up to 10 sheets 5" x 7": up to 10 sheets 4" x 6": up to 20 sheets	Photo Paper Plus Glossy
Photo Paper Plus Semi-gloss*1	Letter: up to 10 sheets 4" x 6": up to 20 sheets	Letter: up to 10 sheets 4" x 6": up to 20 sheets	Photo Paper Plus Glossy
Photo Paper Pro*1	Letter: up to 10 sheets 4" x 6": up to 20 sheets	Letter: up to 10 sheets 4" x 6": up to 20 sheets	Photo Paper Pro
Photo Stickers*2	1 sheet	Not loadable*3	Photo Paper Plus Glossy
Transparencies	Up to 30 sheets	Up to 30 sheets	Transparencies
T-Shirt Transfers	1 sheet	1 sheet	T-Shirt Transfers

*1 When loading a stack of paper, the printed side may be marked when it is fed in. If this happens, load paper one sheet at a time.

*2 You can specify the print setting easily by using the Easy-PhotoPrint provided with the *Setup Software & User's Guide CD-ROM*.

*3 Feeding from the Cassette can damage the printer. Always load in the Auto Sheet Feeder.

Note

- When using plain paper (64 gsm or 17 lb), up to 150 sheets (13 mm or 0.52 inches in height) can be loaded in the Auto Sheet Feeder and Cassette respectively. Select **Plain Paper** from **Media Type** in the printer driver.
- For a detailed description of printing media types, refer to the *User's Guide.*

Windows

Printing with Windows

Note

- Menu and command names may differ between software applications, and more steps may be required. For details, refer to the documentation for each software application you use.
- The steps described in this section are for printing in Windows® XP Service Pack 2 (hereafter, called Windows XP SP2).

1 **Turn on the printer.**

See **"Turning on the Printer"** on page 2.

2 **Load the paper in the printer.**

See **"Loading Paper"** on page 4.

3 **Ensure that the proper paper source is selected.**

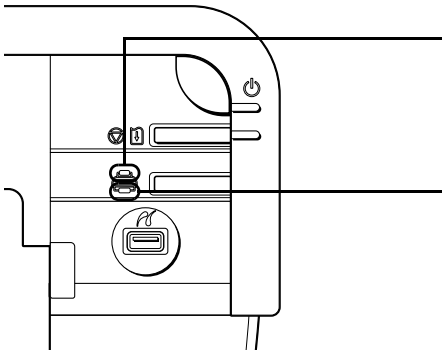

When the Auto Sheet Feeder lamp is lit, paper is fed from the Auto Sheet Feeder.

When the Cassette lamp is lit, paper is fed from the Cassette.

4 **Create a document or open a file to print.**

5 Open the printer properties dialog box.

(1) Select **Print** from the application software's **File** menu.
The **Print** dialog box opens.

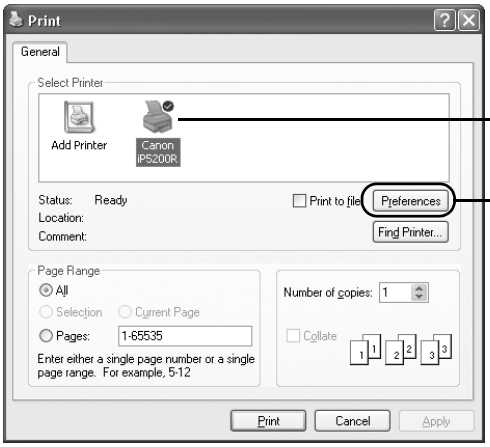

(2) Ensure that your printer is selected.

(3) Click **Preferences** or **Properties.**

6 Specify the required settings.

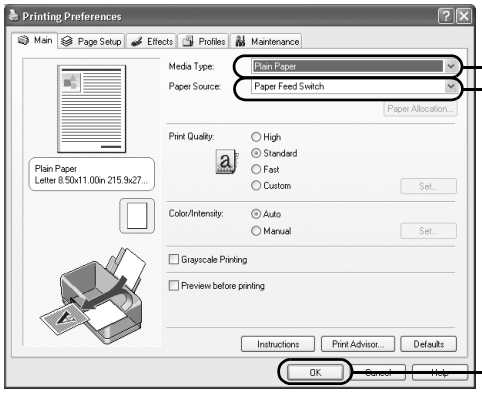

(1) Click **Media Type** to select the type of media loaded in the printer.
Ensure that **Paper Feed Switch** is selected from **Paper Source.**

(2) Click **OK.**

Note

- From the **Page Setup** tab, select the correct document size to be printed.
- This section describes the procedure for selecting the paper source with the Paper Feed Switch on the printer. For a detailed description of the **Paper Source** settings, refer to the *Printer Driver Guide*.
- To adjust the **Print Quality** settings, select **Custom** and click **Set** on the **Main** tab. You can control the print quality in the **Set Print Quality** dialog box.
- For details about other printer driver functions, click **Help** or **Instructions** to view the Help or *Printer Driver Guide*. **Instructions** is only displayed when the On-screen Manual is installed.
- Selecting the **Preview before printing** check box displays a preview screen that allows you to confirm the selected printing effects and how your document will look when printed. Some applications do not have a preview function.

7 Print the document.

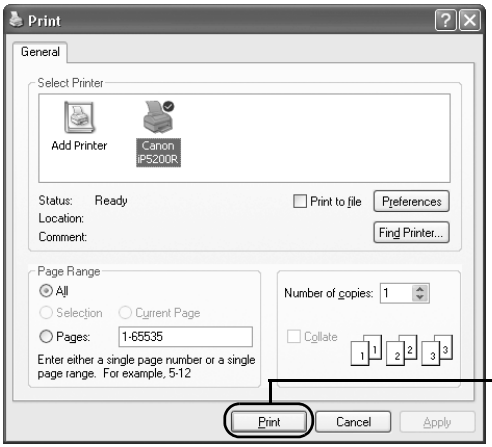

(1) Click **Print** or **OK**.

Note You can cancel a print job in progress by simply pressing the **RESUME/CANCEL** button on the printer.
See "**Canceling Printing**" on page 26.

Macintosh

Printing with Macintosh

Note

- Menu and command names may differ between software applications, and more steps may be required. For details, refer to the documentation for each software application you use.
- The steps described in this section are for printing in Mac® OS X v.10.3.x (hereafter called Macintosh®).

1 **Turn on the printer.**

See **"Turning on the Printer"** on page 2.

2 **Load the paper on the printer.**

See **"Loading Paper"** on page 4.

3 **Ensure that the proper paper source is selected.**

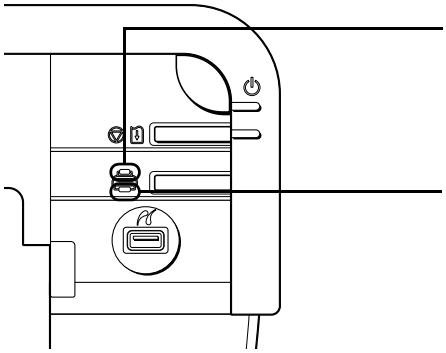

When the Auto Sheet Feeder lamp is lit, paper is fed from the Auto Sheet Feeder.

When the Cassette lamp is lit, paper is fed from the Cassette.

4 **Create a document or open a file to print.**

5 Select **Paper Size.**

(1) Select **Page Setup** from the application software's **File** menu.
The **Page Setup** dialog box opens.

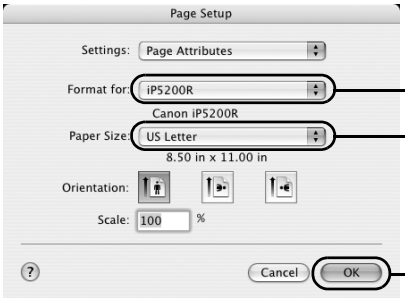

(2) Confirm that **iP5200R** is selected in **Format for.**

(3) Select the desired paper size from **Paper Size.**

(4) Click **OK.**

6 Specify the required settings.

(1) Select **Print** from the application software's **File** menu.
The **Print** dialog box opens.

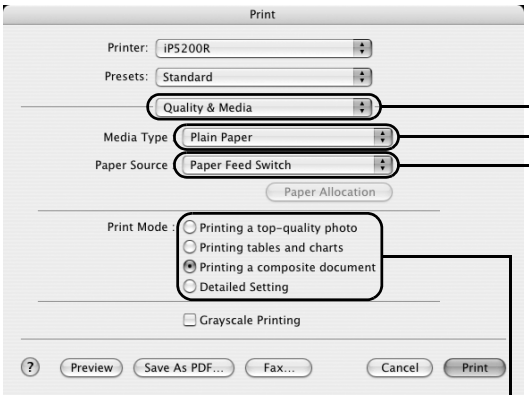

(2) Select **Quality & Media** from the pop-up menu.

(3) Select the desired media type from **Media Type.**

(4) Ensure that **Paper Feed Switch** is selected from **Paper Source.**

(5) Select the print mode appropriate to your document from **Print Mode.**

Note

- This section describes the procedure for selecting the paper source with the Paper Feed Switch on the printer. For a detailed description of the **Paper Source** settings, refer to the *Printer Driver Guide*.
- When you select the print mode appropriate to your document from **Print Mode**, the document will be printed in color and at a print quality suited to the characteristics of the **Media Type** you have selected.
  - **Printing a top-quality photo**: Select when printing documents consisting mainly of photographs and graphics featuring fine color gradation.
  - **Printing tables and charts**: Select when printing documents consisting mainly of graphs and graphics (illustrations) with strong color definition.
  - **Printing a composite document**: Select when printing documents consisting mainly of text.
  - **Detailed Setting**: Select to fine-tune the **Print Quality** and **Halftoning** settings.

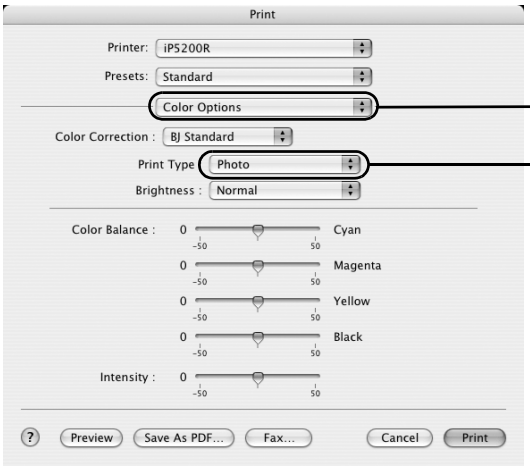

(6) Select **Color Options** from the pop-up menu.

(7) Select the type of the document from **Print Type**.

Note

- For details about other printer driver functions, click ? to view the *Printer Driver Guide*. If the On-screen Manual is not installed, the *Printer Driver Guide* is not displayed even if ? is clicked.
- Clicking the **Preview** button displays a preview screen that allows you to confirm the selected printing effects and how your document will look when printed. Some applications do not have a preview function.

7 **Print the document.**

(1) Click **Print**.

Note You can cancel a print job while printing.
See "**Canceling Printing**" on page 26.

Canceling Printing

Windows

You can cancel a print job while printing, with the **RESUME/CANCEL** button on the printer.

1 **Press the RESUME/CANCEL button while printing.**

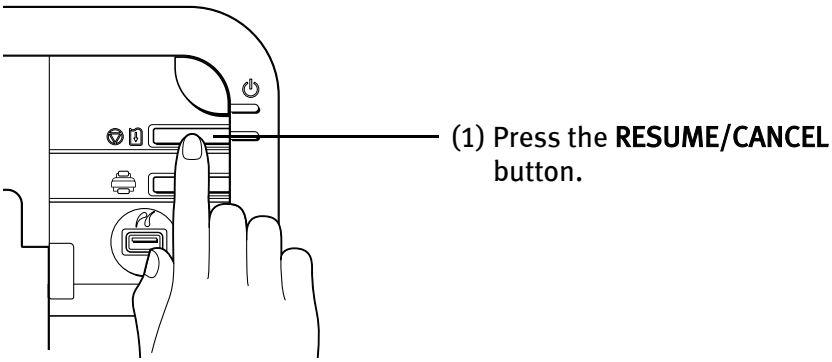

Printing is canceled and paper is fed out.

Note You can also cancel a print job by clicking **Cancel Printing** on the **Canon IJ Status Monitor**. To display the **Canon IJ Status Monitor**, click **Canon iP5200R** on the taskbar.

Macintosh

1 **Select Print from the File menu in your application program.**

The Print dialog box opens.

2 **Select Edit Printer List from the Printer pop-up menu.**

The Printer List opens.

3 **Double-click the printer name displayed in the Name list.**

The iP5200R dialog box opens.

4 **Select the desired document, then click Delete icon.**

Note To temporality stop a job in progress, click **Pause**. To cancel all the jobs in the list, click **Stop Printing**.

Advanced Printing

Printing Photographs Directly from a PictBridge Compliant Device

Connecting a PictBridge compliant device such as a digital camera, camcorder or mobile phone to the printer allows you to print recorded images directly without using a computer.

Note

- PictBridge is an industry standard enabling a range of digital photo solutions, including the direct printing of photos from a digital camera, camcorder or mobile phone* without the need to use a computer.
- It is possible to specify which images to print and various print settings from the operation panel of your camera or mobile phone.
- Canon Bubble Jet Direct allows you to print photos from a Canon Bubble Jet Direct compatible (PictBridge incompatible) digital camera or digital video camcorder without a computer, by simply connecting the digital camera or digital camcorder to this printer.
  For details, refer to "**Printing Photographs Directly from a Canon Bubble Jet Direct Compatible Digital Camera**" on page 85.

* Hereafter, the PictBridge compliant digital camera, digital camcorder, or camera-equipped mobile phone are collectively called a PictBridge compliant device.

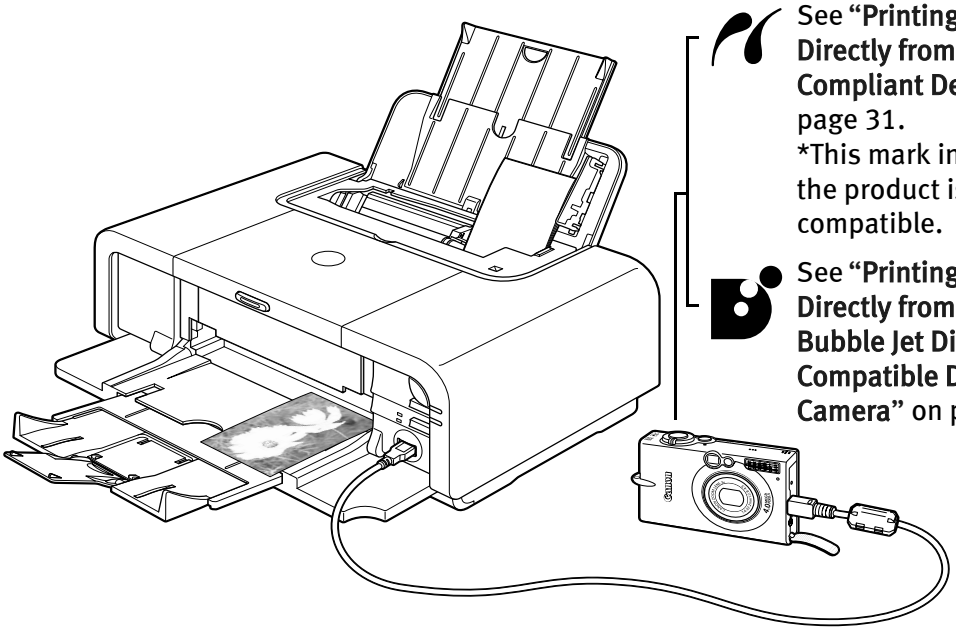

See "**Printing Photographs Directly from a PictBridge Compliant Device**" on page 31.
*This mark indicates that the product is PictBridge-compatible.

See "**Printing Photographs Directly from a Canon Bubble Jet Direct Compatible Digital Camera**" on page 85.

Connecting to a PictBridge Compliant Device

To connect a PictBridge compliant device to this printer, use the USB cable supplied with the device.

Caution Do not connect any equipment other than PictBridge compliant devices or Canon Bubble Jet Direct compatible digital camera to the Direct Print Port of the printer. If you do so, electric shock, fire, or damage to the device could result.

Note

- When printing photos with the digital device connected to the printer, it is advisable to use the AC adapter supplied with the device. If you use the device battery, be sure to charge it fully.
- The Print Head cannot be aligned using the controls of the digital device. The print head alignment can be performed simply by pressing the **RESUME/CANCEL** button on the printer, or by connecting the printer to the computer and then executing automatic print head alignment. Refer to "**Aligning the Print Head**" on page 60.

1 Set up the printer.

2 Turn on the printer.

See "**Turning on the Printer**" on page 2.

3 Load the paper in the printer.

See "**Loading Paper**" on page 4.

4 Connect the PictBridge compliant device to the printer.

Note Depending on the model or brand of your device, you may have to select a print mode compliant with PictBridge before connecting the device.
You may also have to turn on the device or select Play mode manually after connecting the device to the printer.
Perform necessary operations according to the instruction manual supplied with your device.

(1) Make sure the device is turned off.

(2) Connect the device to the printer using the USB cable.

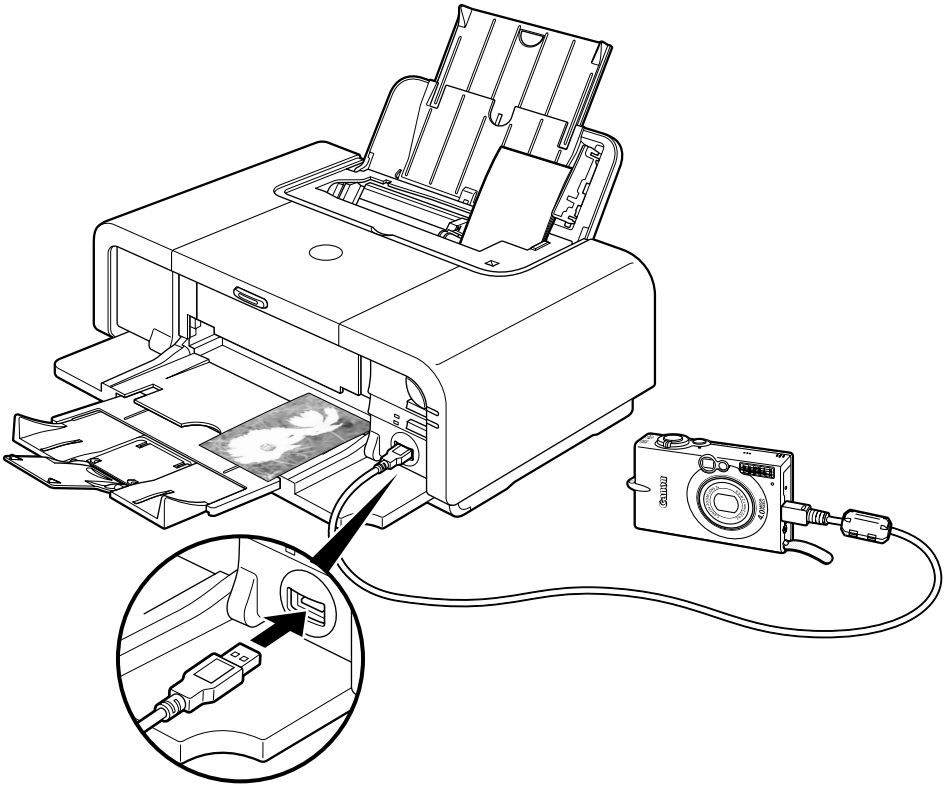

Note The device turns on automatically, when connected to the printer.
For a device not turns on automatically, turn it on manually.

(3) Turn on and set up the device for direct printing.

When the connection between the device and printer has been established, the **POWER** lamp on the printer flashes twice.

* The power-on sequence may differ depending on the model or brand of the device.

Either of the following icons will display on the LCD display of the device when the printer is correctly connected.

A PictBridge-compliant device.

A Canon Bubble Jet Direct compatible digital camera.

Printing Photographs Directly from a PictBridge Compliant Device

When operating the device, be sure to follow the instructions given in the instruction manual supplied with the device. Let's take a look at the paper size, paper type, layout, image optimization modes, and date/file number printing modes that can be set on a PictBridge compliant device connected to the printer.

Checking or Changing PictBridge Print Settings From Your Camera

To change the PictBridge print settings, operate your device to select the PictBridge print setup mode and confirm or change the settings.

When a PictBridge-compatible device is connected and printing is started with no printing option selected, this printer operates based on the following default settings:

- Paper size .....4" x 6"
- Paper type .....Photo (Photo Paper Plus Glossy)
- Layout .....Borderless
- Trimming .....Off (No trimming)
- Image optimize .....ExifPrint
- Date/File No. print...Off (No printing)

Additional settings

The settings explained below cannot be made depending on the brand or model of your device. If any setting cannot be made, the default setting explained above is used.

Names of settings that are displayed on Canon PictBridge compliant device are used in the description given below. Different names may be displayed on your device depending on the brand or model.

For details, refer to your device's instruction manual.

About the Image Data Format for Printing

This printer accepts images* taken with a camera compatible with the Design rule for Camera File System and PNG files.

* Exif2.21 compliant

About “Paper size” and “Paper type”

By default, **4" x 6"** is selected from **Paper size** and **Photo** (Photo Paper Plus Glossy) is selected from **Paper type** for this printer. To use Photo Paper Pro, select **Fast Photo** from **Paper type**.

The following sizes and types of paper can be loaded in the printer by selecting options from **Paper size** and **Paper type**.

“Paper size” setting	“Paper type” setting	Paper loaded in printer
10 x 15 cm/4" x 6" (Default)	Photo (Default)	Photo Paper Plus Glossy
	Photo	Photo Paper Plus Semi-gloss
	Photo	Glossy Photo Paper
	Photo	Photo Stickers*1
	Fast Photo	Photo Paper Pro
13 x 18 cm/5" x 7"*2	Photo	Photo Paper Plus Glossy
5.4 x 8.6 cm/Credit Card	Photo	Glossy Photo Paper
A4/8.5" x 11" (Letter)*3*4	Photo	Photo Paper Plus Glossy
	Photo	Photo Paper Plus Semi-gloss
	Photo	Glossy Photo Paper
	Fast Photo	Photo Paper Pro

*1 This paper is exclusively used to print photo stickers. When printing on sticker paper, select **4" x 6"** in **Paper size**.

*2 This size can be selected only for Canon PictBridge compliant devices (note that it cannot be selected for some models).

*3 When **A4** or **8.5" x 11" (Letter)** is selected in **Paper size**, you can select **Plain Paper** in **Paper type**. When **Plain Paper** is selected in **Paper type**, bordered printing will be performed even if you select **Borderless** in **Layout**.

*4 When **A4** or **8.5" x 11" (Letter)** is selected in **Paper size**, you can print in 4-up layout.

About “Layout” and “Trimming”

By default, **Borderless** is selected for **Layout** and **Off (No trimming)** is selected for **Trimming** for this printer.

Note When printing onto Photo Stickers (16-up), use the following settings.

1. Select the Auto Sheet Feeder as the paper source. See “**Loading Plain Paper in the Auto Sheet Feeder**” on page 7.
   Always load Photo Stickers in the Auto Sheet Feeder.
2. Select **10 x 15 cm / 4" x 6"** for the **Paper size**, and **Photo** for the **Paper type**.
3. Select **N-up** for **Layout**, then select **16**.
   Some PictBridge compliant devices display the **Layout** option; **2-up**, **4-up**, **9-up**, and **16-up**. In this case always select **16-up**.
   If there are no options on the PictBridge compliant device that correspond to 2-up, 4-up, 9-up, or 16-up, printing on stickers is not possible.

About “Image optimize”

By default, **ExifPrint** is selected for this printer.

If you use a Canon PictBridge-compatible device, you can select **VIVID**, **NR**, **VIVID+NR**, or **Face**. (Note that these options cannot be selected for some models.)

Note

- When **VIVID** is selected, green and blue portions of photos are printed vividly.
- When **NR** (Noise Reduction) is selected, noise in blue portions, such as the sky, and dark portions is removed.
- When **VIVID+NR** is selected, functions of both **VIVID** and **NR** are performed.
- When **Face** is selected, backlit images are corrected.

About “Date/File No. print”

By default, **Off** is selected for this printer.

If you select an image which has had the shooting date embedded in it using a camera with the print mode, select **Off** for this function. If you select **Date**, **File No.**, or **Both**, the date and/or file number will be printed over the embedded date.

Other Settings

If you use a Canon PictBridge-compliant device, you can use the following print settings. (Note that these print settings cannot be used for some models.) For details, refer to your device's instruction manual.

- Shooting Info (Exif Data)

  You can print shooting info (Exif data) on photos in list format, or in the margins of specified photos.

  Select **Layout**, then select the item displayed with the [i] icon.

- 35 mm Film Style Layout (Contact Printing Layout)

  You can print selected photos or index-specified photos as 35 mm film style layout (contact printing layout).

  Select **Layout** then select the item displayed with the film icon.

Note

- Never disconnect the USB cable during printing.
- When disconnecting the USB cable between the device and printer, follow the instructions given in the instruction manual of the device.
- Controls of the device cannot be used for the following functions:
  - Print quality setting
  - Printer maintenance
- For the device operation method and troubleshooting, refer to your device manual. For print error messages, see "**Cannot Print Properly from the Digital Camera**" on page 82.

Checking or Changing PictBridge Print Settings From the Printer

You can change the printer's default PictBridge print settings, such as paper size and type. To do this, install the **Canon Setup Utility** from the included CD-ROM and connect the printer to a computer. For details, refer to the *User's Guide*.

Accessing the Printer Driver (Windows)

The printer properties dialog box can be opened from either within an application, or directly from the Windows **Start** menu.

Note This manual refers to Windows XP SP2 operation.
The operations may vary depending on the version of your Windows operating system.

■ Opening the Printer Properties Dialog Box from Your Application Program

Note Depending on your application program, the command and menu names may differ, and there may be more steps involved in opening the printer properties dialog box. For more details, see the user's manual for your application.

1 **In your application, select the command to print a document.**

The **Print** dialog box can usually be opened by selecting **Print** from the **File** menu.

2 **Ensure that the name of your printer is selected. Then click Preferences (or Properties).**

The printer properties dialog box opens.

■ Opening the Printer Properties Dialog Box Directly from the Start Menu

This method is used for printer maintenance and configuring shared print settings for all application programs.

1 **Click Start and select Control Panel, Printers and Other Hardware, and then Printers and Faxes.**

For non-Windows XP, click **Start**, select **Settings**, and then **Printers**.

2 **Select the icon of your printer.**

3 Open the **File** menu and select **Printing Preferences** (or **Properties**).

The printer properties dialog box opens.

When opening the printer properties dialog box from **Properties**, the tabs related to the Windows function (e.g., the **Ports** tab, or the **Details** tab) are displayed. These tabs are not displayed, when the printer properties dialog box is opened from **Printing Preferences** or applications. For details about these tabs, refer to the Windows documentation.

Note For details on how to set each function, refer to the Help or *Printer Driver Guide*.

Using the Bundled Software

The *Setup Software & User's Guide CD-ROM* includes photo applications designed to edit the photographs taken by a digital camera and print them as photo-lab quality prints without standard white borders. Please use the application(s) suitable for your print purposes.

Note
- To install applications, refer to the *Setup Guide*.
- For details about using the photo applications, refer to the *Photo Application Guide*.

■ Easy-PhotoPrint (Windows/Macintosh)

You can make a Borderless Print easily and quickly, just by selecting a photograph taken with a digital camera and the paper type on which to print. Also it has tools to correct red eye caused by the camera's flash or smooth and beautify the facial skin. It is compatible with ExifPrint*.

■ PhotoRecord (Windows)

You can create fun and unique photo albums with the decorative themes such as frame, background, and clip-art. You can also copy or move the decorated photos.

It is compatible with ExifPrint*.

■ Easy-WebPrint (Windows)

You can easily print out homepages displayed on Internet Explorer® in full size without its right-hand side being cropped. This application is automatically added to the Internet Explorer toolbar. Internet Explorer 5.5 or later must be installed.

* ExifPrint is the worldwide standard. Under ExifPrint, the digital camera can record data tags for specific camera settings and functions such as whether the flash was on or off, if the camera was in portrait or night scene mode, etc. Canon PIXMA Printers support ExifPrint and use a suitable photo application to read the camera data precisely, producing optimal prints. This enables you to create prints that reproduce color more accurately.

Printing Maintenance

Replacing an Ink Tank

Replace ink tank(s) if they are out of ink. When replacing them, check the model numbers and their installation positions.

With this printer, the ink tanks must be installed in the order (from left to right) indicated below:

- Black: CLI-8BK

- Black: PGI-5BK

- Yellow: CLI-8Y

- Magenta: CLI-8M

- Cyan: CLI-8C

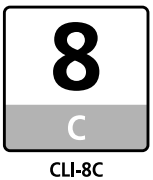

Note Should missing characters or white streaks appear despite sufficient ink levels, refer to **"When Printing Becomes Faint or Colors are Incorrect"** on page 46.

■ Getting the Ink Level Information

Ink Level Indication on the Printer

You can confirm the ink level in each ink tank through the ink tank lamps. Open the Top Cover of the printer to see how the ink tank lamps light or flash.

Ink is low: The ink tank lamp flashes slowly (at about three second interval). Prepare a new ink tank.

Ink is out: The ink tank lamp flashes quickly (at about one second interval), and the **ALARM** lamp on the printer flashes orange four times. Replace the ink tank with a new one.

* When the **ALARM** lamp on the printer flashes orange seven or thirteen times, an error has occurred and therefore the printer is unable to print. For details, refer to "**Handling Error Messages**" on page 77.

Ink Level Indication on the PC

Windows

Open the **Canon IJ Status Monitor** to check the ink level information.

1. Open the printer properties dialog box.
   See "**Accessing the Printer Driver (Windows)**" on page 35.
2. Click **View Printer Status** on the **Maintenance** tab.
   The following message will be displayed.

   * You can also display the **Canon IJ Status Monitor** by clicking the **Canon IJ Status Monitor** button which appears on the taskbar during printing.

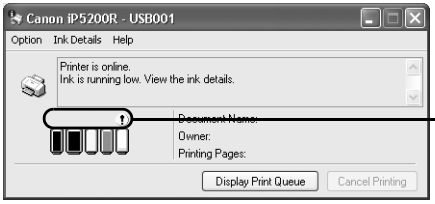

Confirm whether any symbols are displayed here.

Ink is low: The [!] symbol appears above an ink tank that is low.

Ink is out: The [x] symbol appears above an empty ink tank. Click **Ink Details** to show the ink tank information, then replace the ink tank with a new one.

Macintosh

Open the **Canon IJ Printer Utility** to check the ink level information.

1. Select **Applications** from the **Go** menu, and then double-click the **Utilities** folder.
2. Double-click the **Printer Setup Utility** icon.
   When using Mac OS X v.10.2, double-click the **Print Center** icon.
3. Select the name of your printer from the **Name** list and click **Utility**.
   When using Mac OS X v.10.2, select the name of your printer from the **Name** list and click **Configure**.
4. Select the name of your printer from the **Product** list and click **Maintenance**.
   The **Canon IJ Printer Utility** launches.
5. Select **Ink Level Information** from the pop-up menu.
   The following dialog box is displayed.

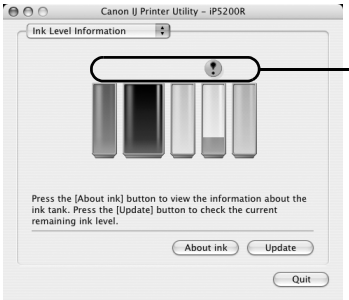

Confirm whether any symbols are displayed here.

Ink is low: The [!] symbol appears above an ink tank that is low.

Ink is out: The [x] symbol appears above an empty ink tank. Click **About ink** to show the ink tank information, then replace the ink tank with a new one.

■ Knowing When to Replace Ink Tanks

The **ALARM** lamp flashes orange four times once any one of the ink tanks is out of ink. If ink is out during printing, a message will be displayed on your PC. Check to see which ink tank is out of ink, and replace it with a new one. Close the Top Cover after ink tank replacement to resume printing.

Windows

- If printing has not finished, you can continue printing for a while by pressing the **RESUME/CANCEL** button on the printer with the empty ink tank installed. However, you will need to replace it with a new one as soon as printing finishes. If you continue printing with an empty ink tank, it may damage the printer.
  - * Printing does not resume if any of the ink tanks are removed. Be sure to press the **RESUME/CANCEL** button with the ink tanks installed.
  - * Continuing to print in the out of ink state will cause the remaining ink level to be displayed incorrectly in the Canon IJ Status Monitor.
- Click **Cancel Printing** to cancel printing. Replace the ink tank with a new one.

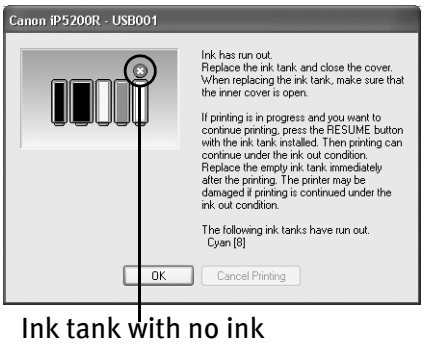

Ink tank with no ink

Macintosh

- If printing has not finished, you can continue printing for a while by pressing the **RESUME/CANCEL** button on the printer with the empty ink tank installed. However, you will need to replace it with a new one as soon as printing finishes. If you continue printing with an empty ink tank, it may damage the printer.

  * Printing does not resume if any of the ink tanks are removed. Be sure to press the **RESUME/CANCEL** button with the ink tanks installed.
  * Continuing to print in the out of ink state will cause the remaining ink level to be displayed incorrectly in the Canon IJ Printer Utility.

- Click **Delete Job** to cancel the current printing job. Click **Stop Job** to stop the current printing job. Click **Stop All Jobs** to stop all printing jobs. Replace the ink tank with a new one.

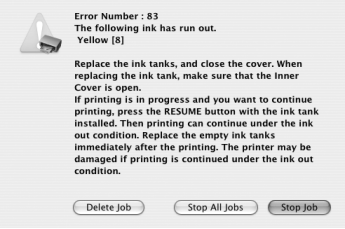

Replacing Ink Tanks

When an ink tank runs out of ink, replace it using the following steps.

1 **Ensure that the printer is on, and then open the Paper Output Tray.**

Push the Open Button above the Paper Output Tray. The Paper Output Tray automatically opens.

2 **Open the Top Cover.**

The Print Head Holder moves to the center.

Important If the Top Cover is left open for more than 10 minutes, the Print Head Holder moves to the right. Close and reopen the Top Cover to return the holder to the center.

3 **Remove the ink tank whose lamp is flashing fast.**

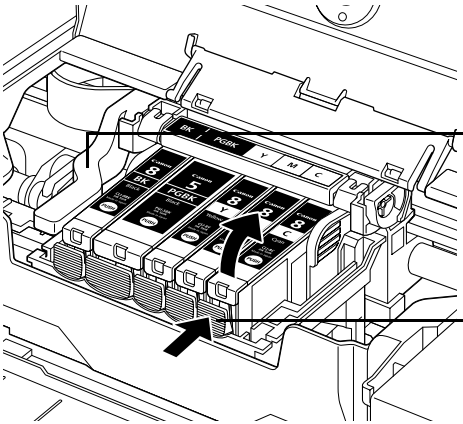

Important
- Handle ink tanks carefully to avoid staining clothing or the surrounding area.
- Discard empty ink tanks according to the local laws and regulations regarding disposal of consumables.

Note Be sure to replace ink tanks one by one when replacing more than one ink tank.

4 Prepare a replacement tank.

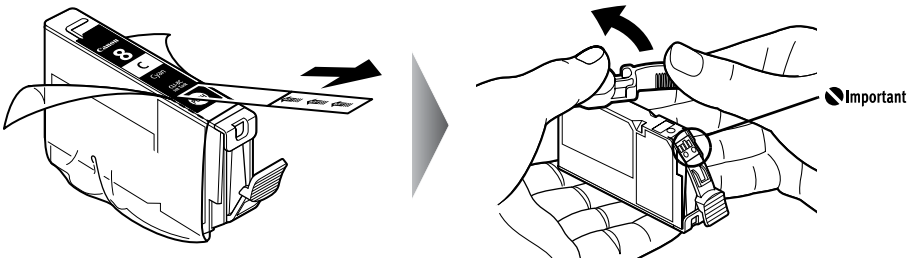

(1) Unpack the new ink tank and completely pull off the orange tape. Then, remove the film completely.

(2) Remove the orange protective cap from the bottom of the ink tank and discard it.

Important

- Be sure to remove the clear film from the ink tank in the exact order shown in step 4-(1), as failure to follow this step may cause the ink to leak and stain your clothes and hands.
- Do not touch the electrical contacts on the ink tank. Doing so can cause the printer to malfunction or become unable to print.
- Do not squeeze the side of ink tanks as this may cause the ink to leak out and stain your clothes and hands.
- Do not re-attach the protective cap once you have removed it.
- Do not touch the open ink port once the protective cap is removed, as this may prevent the ink from being ejected properly.
- Ink on the removed protective cap may stain your clothes and hands.
- Ensure that all the orange tape has been peeled off along the perforation. If there remains a part of the orange tape, ink may not be ejected correctly.

5 Insert the ink tank.

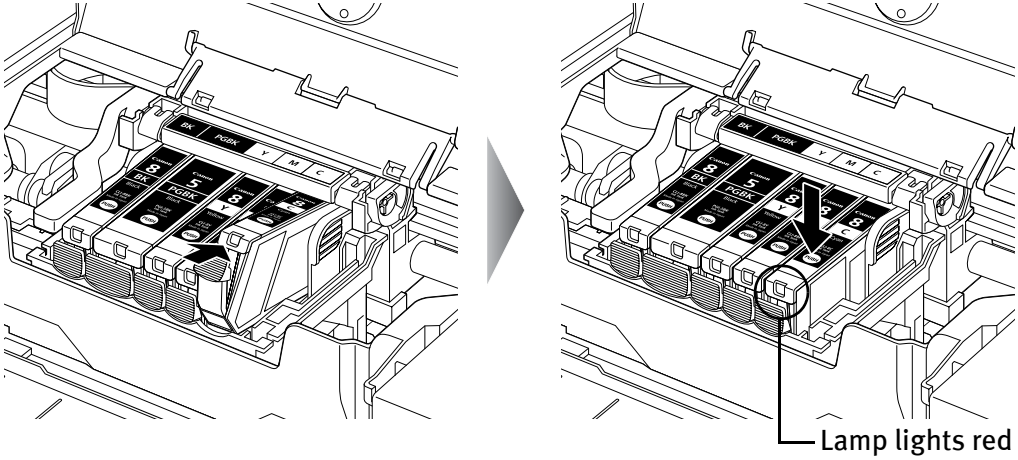

(1) Insert the ink tank into the Print Head.

(2) Press on the PUSH mark on the ink tank until the ink tank snaps firmly into place.

(3) Ensure that the ink tank lamp lights red.

Important Ensure that all the ink tanks are installed in the order directed by the label. The printer cannot be used unless all the ink tanks are installed.

6 Close the Inner Cover and the Top Cover.

The Print Head Holder moves to the right. The ink tank installation process is now complete.

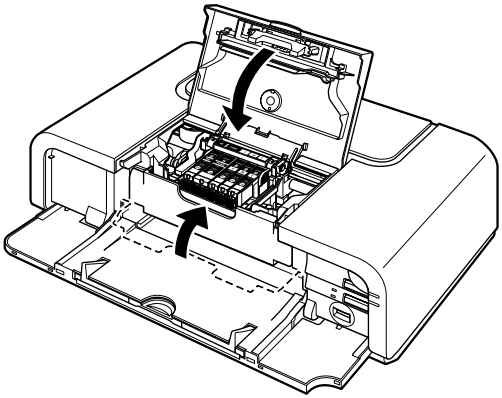

Note

- Ensure that the Inner Cover is closed. Printing will not occur if the Inner Cover is open.
- The **ALARM** lamp still flashes orange after the Top Cover is closed if an ink tank is not installed properly. Open the Top Cover and make sure that all the ink tanks are installed in the correct order directed on the label.
- To maintain optimal print quality, use an ink tank within six months of its first use.
- Once an ink tank has been used, do not remove it from the printer and leave it out in the open. This will cause the ink tank to dry out and the printer may not operate properly if it is reinstalled.
- Color ink consumption may occur even when black-and-white or grayscale printing is specified.
  Color ink is consumed in the head cleaning and deep cleaning, which are necessary to maintain the printer's capabilities.
- When you start printing after replacing the ink tank, the printer executes **Print Head Cleaning** automatically. Do not perform any other operations until the **Print Head Cleaning** finishes. The **POWER** lamp flashes green during cleaning.

When Printing Becomes Faint or Colors are Incorrect

When printing becomes faint or colors are incorrect, even if ink remains in the ink tanks, the Print Head nozzles are probably clogged. Follow the procedures below to clean the nozzles.

If the ruled lines are shifted after running the print head maintenance, align the Print Head.

Important **Before printing the nozzle check pattern or cleaning the Print Head, check the following;**

- Open the Top Cover and make sure that all the ink tanks click into place and then their lamps light red.

  If any one of the lamps is flashing, the associated ink tank is empty or running low. Replace the ink tank. See **"Replacing Ink Tanks"** on page 42.

  If an ink tank lamp is flashing even though ink remains in that ink tank, it is inserted in the wrong position. Make sure that the correct ink tank color is inserted in each position. See **"Replacing an Ink Tank"** on page 37.

  If the ink tank lamp is unlit, press the PUSH mark on the ink tank to fully insert it. Make sure that all packaging material is peeled off the ink tank. See **"Replacing Ink Tanks"** on page 42.
- Increase the **Print Quality** setting in the printer driver settings.
  See **"Print Results Not Satisfactory or Contains Errors"** on page 67.

Step 1

See **"Printing the Nozzle Check Pattern"** on page 47

If missing lines or white stripes appear

After print head cleaning, print the nozzle check pattern.

Step 2

See **"Print Head Cleaning"** on page 52

If the problem remains after performing print head cleaning twice

Step 3

See **"Print Head Deep Cleaning"** on page 56

Note If **Print Head Deep Cleaning** does not resolve the problem, the Print Head may be defective. Contact the Customer Care Center.

- **If the ruled lines are shifted**

Step 1

See **"Aligning the Print Head"** on page 60

Printing the Nozzle Check Pattern

Print the nozzle check pattern to determine whether the ink ejects properly from the Print Head nozzles. Use this function when printed results are blurred or the color is incorrect.

Note

- Ensure that the Inner Cover is closed.

Printing the Nozzle Check Pattern Without a Computer

- Nozzle check pattern printing can also be executed from the printer itself.
  1. With the printer on, load a sheet of Letter-sized plain paper in the Auto Sheet Feeder or Cassette.
  2. Press the Paper Feed Switch to select the paper source in which you loaded the paper.
  3. Hold down the **RESUME/CANCEL** button until the **POWER** lamp flashes green twice, and then release it immediately.

■ Printing the Nozzle Check Pattern

Windows

1 **With the printer on, load a sheet of Letter-sized plain paper in the Auto Sheet Feeder or Cassette.**

2 **Press the Paper Feed Switch to select the paper source in which you loaded the paper.**

3 **Open the printer properties dialog box.**

See "**Opening the Printer Properties Dialog Box Directly from the Start Menu**" on page 35.

4 Print the Nozzle Check Pattern.

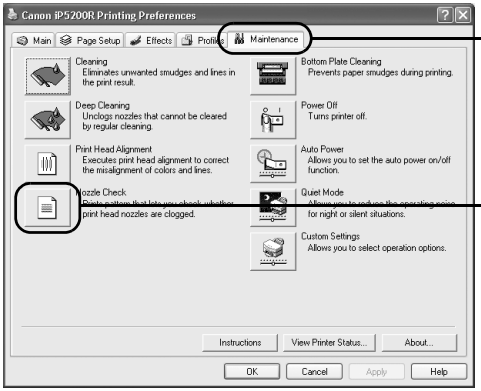

(1) Click the **Maintenance** tab.

(2) Click **Nozzle Check.**

(3) Read the message and click **Print Check Pattern.**

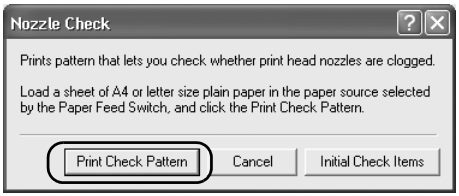

The nozzle check pattern will be printed.

Note Clicking **Initial Check Items** displays the items to be checked before printing the pattern.

5 Examine the pattern and take the appropriate action.

See **"Examining the Nozzle Check Pattern"** on page 50.

Macintosh

1 With the printer on, load a sheet of Letter-sized plain paper in the Auto Sheet Feeder or Cassette.

2 Press the Paper Feed Switch to select the paper source in which you loaded the paper.

3 Open the **Canon IJ Printer Utility** dialog box.

(1) Select **Applications** from the **Go** menu, and then double-click the **Utilities** folder.

(2) Double-click the **Printer Setup Utility** icon.
When using Mac OS X v.10.2, double-click the **Print Center** icon.

(3) Select the name of your printer from the **Name** list and click **Utility**.
When using Mac OS X v.10.2, select the name of your printer from the **Name** list and click **Configure**.

(4) Select the name of your printer from the **Product** list and click **Maintenance**.

4 Print the Nozzle Check Pattern.

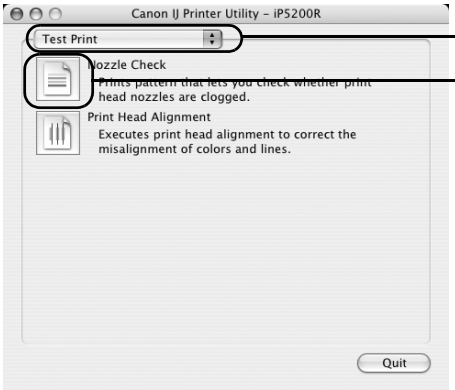

(1) Select **Test Print** from the pop-up menu.

(2) Click **Nozzle Check**.

(3) Read the message and click **Print Check Pattern**.

The nozzle check pattern will be printed.

Note Clicking **Initial Check Items** displays the items to be checked before printing the pattern.

5 Examine the pattern and take the appropriate action.

See "**Examining the Nozzle Check Pattern**" on page 50.

■ Examining the Nozzle Check Pattern

The nozzle check pattern should appear as follows when ink is discharged properly. Examine the nozzle check pattern output by the printer, and clean the Print Head when necessary.

Note The nozzle check pattern will not be printed correctly if there is not enough ink. Replace the ink tank if the remaining amount of ink is insufficient.
See "**Replacing an Ink Tank**" on page 37.

1 **Confirm the printed nozzle check pattern.**

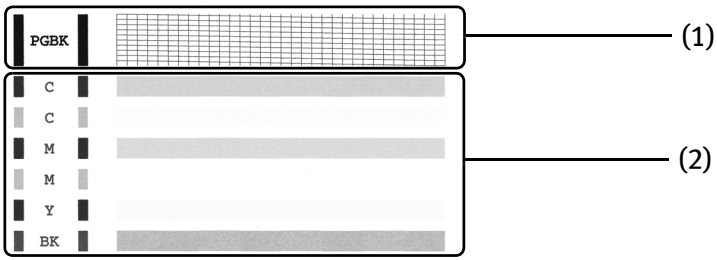

(1) If line of this pattern are missing, the "Black" print head nozzle needs cleaning.

Example: When line are missing

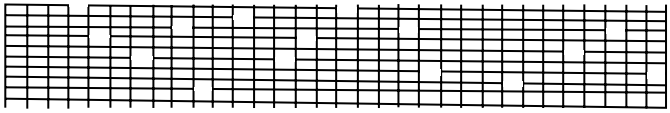

(2) If these patterns have white stripes, the "Color" print head nozzle needs cleaning.

Example: When white stripes appear

2 When cleaning is necessary, click Cleaning on the Pattern Check dialog box.

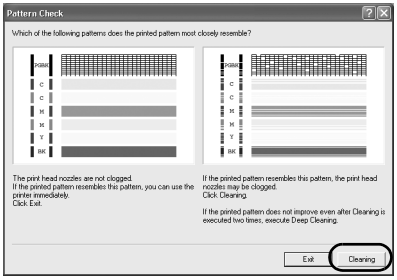

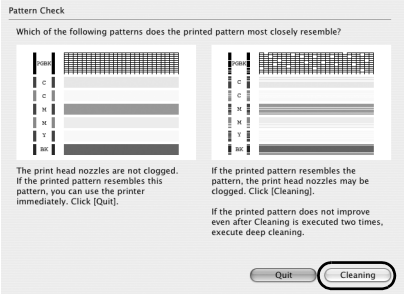

If you want to continue to clean the Print Head from here, go to step 3-(3) of the Windows or Macintosh **Print Head Cleaning** procedures as appropriate.

See “**Print Head Cleaning**” on page 52.

If no lines of the group (1) pattern are missing, and the group (2) patterns have no white stripes, click **Exit** or **Quit**.

Nozzle Check Pattern examination finishes.

Print Head Cleaning

Clean the Print Head if missing lines or white stripes appear in the nozzle check pattern. Note that cleaning the Print Head causes waste ink to be absorbed in the waste ink absorber. Cleaning the Print Head consumes ink, so perform **Print Head Cleaning** only when necessary.

Note

- Ensure that the Inner Cover is closed.

Cleaning the Print Head Without a Computer

- The Print Head can also be cleaned from the printer itself. With the printer on, hold down the **RESUME/CANCEL** button until the **POWER** lamp flashes green once, and then release it immediately.

Windows

Note The **Print Head Cleaning** dialog box of step 3-(3) is directly displayed when you click **Cleaning** on the **Pattern Check** dialog box.
See "**Examining the Nozzle Check Pattern**" on page 50.

1 Ensure that the printer is on.

2 Open the printer properties dialog box.

See "**Opening the Printer Properties Dialog Box Directly from the Start Menu**" on page 35.

3 Start Print Head Cleaning.

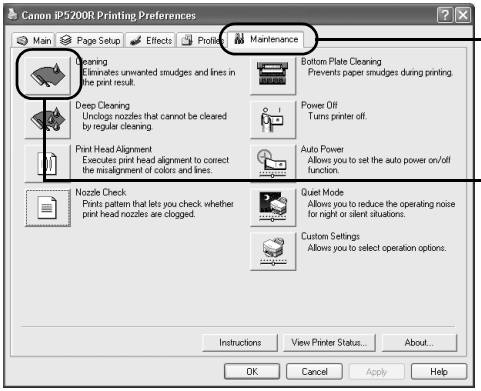

(1) Click the **Maintenance** tab.

(2) Click **Cleaning**.

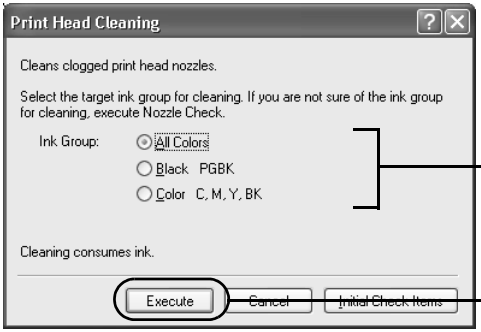

(3) Select the ink group to clean.
When cleaning the nozzles of black ink tanks: select **Black** to clean the nozzles of PGI-5BK, **Color** to clean the nozzles of CLI-8BK.

Note Clicking **Initial Check Items** displays the items to be checked before cleaning.

(4) Click **Execute**.

Print Head Cleaning starts when the **POWER** lamp starts blinking green.

Important Do not perform any other operations until the **Print Head Cleaning** finishes. This takes about 50 seconds.

(5) Read the message and click **Print Check Pattern** to print the nozzle check pattern.
The nozzle check pattern is printed.

Important Do not perform any other operations until the nozzle check pattern printing finishes.

Note The nozzle check pattern will not be printed correctly if there is not enough ink. Replace the ink tank if the remaining amount of ink is insufficient.
See **"Replacing an Ink Tank"** on page 37.

4 Check the Print Head condition with the printed nozzle check pattern.

See "**Examining the Nozzle Check Pattern**" on page 50.

Note If the problem remains after performing **Print Head Cleaning** twice, try **Print Head Deep Cleaning**.
See "**Print Head Deep Cleaning**" on page 56.

Macintosh

Note The **Cleaning** dialog box of step 3-(3) is directly displayed when you click **Cleaning** on the **Pattern Check** dialog box.
See "**Examining the Nozzle Check Pattern**" on page 50.

1 Ensure that the printer is on.

2 Open the **Canon IJ Printer Utility** dialog box.

(1) Select **Applications** from the **Go** menu, and then double-click the **Utilities** folder.

(2) Double-click the **Printer Setup Utility** icon.
When using Mac OS X v.10.2, double-click the **Print Center** icon.

(3) Select the name of your printer from the **Name** list and click **Utility**.
When using Mac OS X v.10.2, select the name of your printer from the **Name** list and click **Configure**.

(4) Select the name of your printer from the **Product** list and click **Maintenance**.

3 Start Print Head Cleaning.

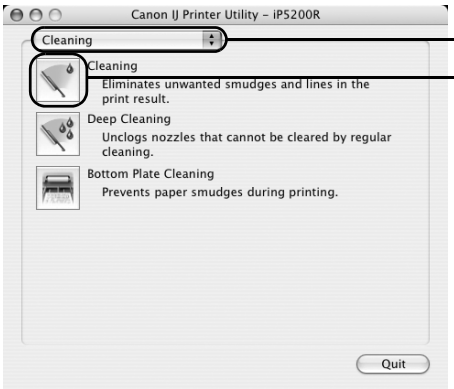

(1) Ensure that **Cleaning** is selected from the pop-up menu.

(2) Click **Cleaning**.

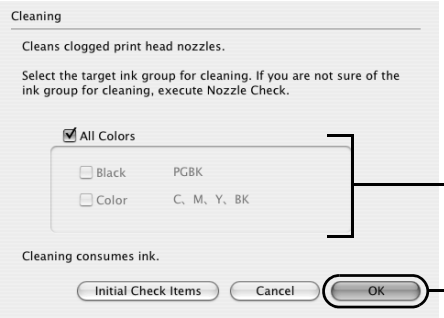

(3) Select the ink group to clean.
When cleaning the nozzles of black ink tanks: select **Black** to clean the nozzles of PGI-5BK, **Color** to clean the nozzles of CLI-8BK.

Note Clicking **Initial Check Items** displays the items to be checked before cleaning.

(4) Click **OK**.

Print Head Cleaning starts when the **POWER** lamp starts blinking green.

Important Do not perform any other operations until the **Print Head Cleaning** finishes. This takes about 50 seconds.

(5) Read the message and click **Print Check Pattern** to print the nozzle check pattern.
The nozzle check pattern is printed.

Important Do not perform any other operations until the nozzle check pattern printing finishes.

Note The nozzle check pattern will not be printed correctly if there is not enough ink. Replace the ink tank if the remaining amount of ink is insufficient.
See "**Replacing an Ink Tank**" on page 37.

4 Check the Print Head condition with the printed nozzle check pattern.

See "**Examining the Nozzle Check Pattern**" on page 50.

Note If the problem remains after performing **Print Head Cleaning** twice, try **Print Head Deep Cleaning**.
See "**Print Head Deep Cleaning**" on page 56.

Print Head Deep Cleaning

If print quality does not improve by standard **Print Head Cleaning**, try **Print Head Deep Cleaning**, which is a more powerful process. Note that cleaning the Print Head causes waste ink to be absorbed in the waste ink absorber. **Print Head Deep Cleaning** consumes more ink than standard Print Head Cleaning, so perform this procedure only when necessary.

Note Ensure that the Inner Cover is closed.

Windows

1 **Ensure that the printer is on.**

2 **Open the printer properties dialog box.**

See **"Opening the Printer Properties Dialog Box Directly from the Start Menu"** on page 35.

3 **Start Print Head Deep Cleaning.**

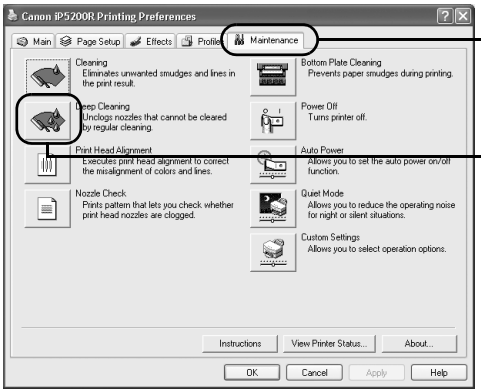

(1) Click the **Maintenance** tab.

(2) Click **Deep Cleaning**.

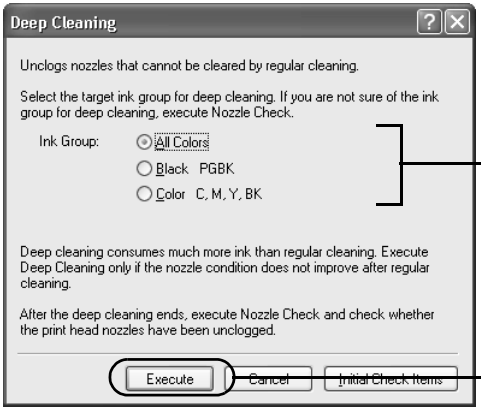

(3) Select the ink group to clean.
When cleaning the nozzles of black ink tanks: select **Black** to clean the nozzles of PGI-5BK, **Color** to clean the nozzles of CLI-8BK.

Note Clicking **Initial Check Items** displays the items to be checked before cleaning.

(4) Click **Execute**.

(5) When the confirmation message is displayed, click **OK**.
Print Head Deep Cleaning starts when the **POWER** lamp starts blinking green.

Important Do not perform any other operation until the **Print Head Deep Cleaning** finishes. This takes about 90 seconds.

4 Print the nozzle check pattern to check the Print Head condition.

See "**Printing the Nozzle Check Pattern**" on page 47.

If a particular color is not printed properly, replace the ink tank of that color. See "**Replacing an Ink Tank**" on page 37.

Note

- If the print head nozzles are still not clean, open the Top Cover and ensure that there are sufficient ink levels in all ink tanks and turn off the printer. Be sure to perform another **Print Head Deep Cleaning** 24 hours after turning off the printer.
- If this does not solve the problem, the Print Head may be worn out. Contact the Customer Care Center.

Macintosh

1 Ensure that the printer is on.

2 Open the **Canon IJ Printer Utility** dialog box.

(1) Select **Applications** from the **Go** menu, and then double-click the **Utilities** folder.

(2) Double-click the **Printer Setup Utility** icon.
When using Mac OS X v.10.2, double-click the **Print Center** icon.

(3) Select the name of your printer from the **Name** list and click **Utility**.
When using Mac OS X v.10.2, select the name of your printer from the **Name** list and click **Configure**.

(4) Select the name of your printer from the **Product** list and click **Maintenance**.

3 Start Print Head Deep Cleaning.

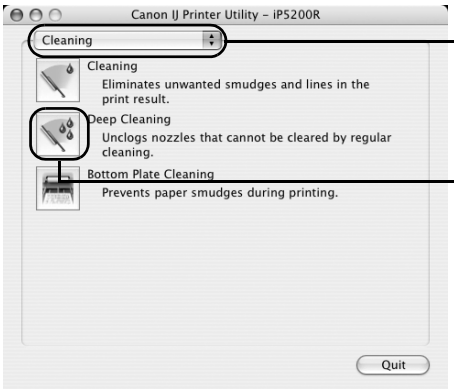

(1) Ensure that **Cleaning** is selected from the pop-up menu.

(2) Click **Deep Cleaning**.

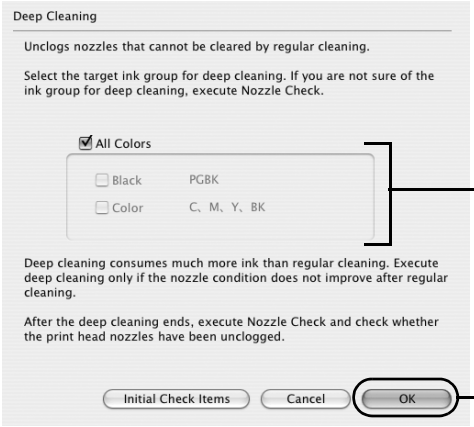

(3) Select the ink group to clean.
When cleaning the nozzles of black ink tanks: select **Black** to clean the nozzles of PGI-5BK, **Color** to clean the nozzles of CLI-8BK.

Note Clicking **Initial Check Items** displays the items to be checked before cleaning.

(4) Click **OK**.

Print Head Deep Cleaning starts when the **POWER** lamp starts blinking green.

Important Do not perform any other operation until the **Print Head Deep Cleaning** finishes. This takes about 90 seconds.

4 Print the nozzle check pattern to check the Print Head condition.

See "**Printing the Nozzle Check Pattern**" on page 47.

If a particular color is not printed properly, replace the ink tank of that color. See "**Replacing an Ink Tank**" on page 37.

Note

- If the print head nozzles are still not clean, open the Top Cover and ensure that there are sufficient ink levels in all ink tanks and turn off the printer. Be sure to perform another **Print Head Deep Cleaning** 24 hours after turning off the printer.
- If this does not solve the problem, the Print Head may be worn out. Contact the Customer Care Center.

Aligning the Print Head

This operation must be carried out when using the printer for the first time. Aligning the Print Head positions allows you to print without shifts in the color registration.

Print head alignment is performed either automatically or manually. This section deals with automatic Print Head alignment only.

Note

- Automatic print head alignment cannot be performed from the Cassette. Always load paper in the Auto Sheet Feeder.
- Ensure that the Inner Cover is closed.

Aligning the Print Head Without a Computer

- The Print Head can also be aligned from the printer itself. If the printer driver is not installed in the computer, align the print head in this way.
  1. With the printer on, load a sheet of Letter-sized plain paper in the Auto Sheet Feeder.
  2. Hold down the **RESUME/CANCEL** button until the **POWER** lamp flashes green four times, and then release it immediately.

Windows

1 **With the printer on, load a sheet of Letter-sized plain paper in the Auto Sheet Feeder.**

2 **Open the printer properties dialog box.**

See **"Opening the Printer Properties Dialog Box Directly from the Start Menu"** on page 35.

3 **Print the pattern.**

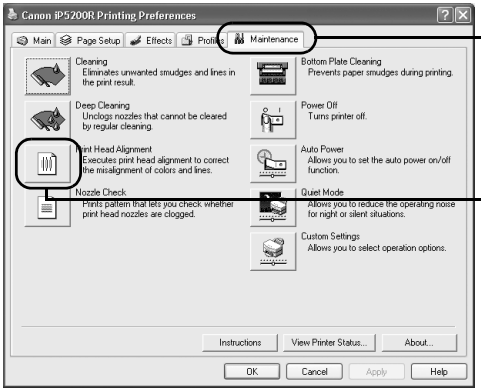

(1) Click the **Maintenance** tab.

(2) Click **Print Head Alignment**.

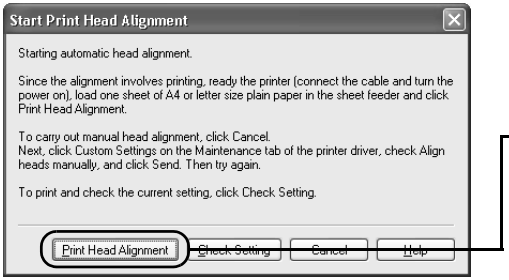

(3) Read the message and click **Print Head Alignment.**

Important It takes about four minutes to complete printing. Do not open the Top Cover while printing.

Note Clicking **Check Setting** prints the current settings and finishes the print head alignment.

4 Check the printed pattern.

If the pattern is printed as shown below, the Print Head is aligned automatically. The printer is now ready to use.

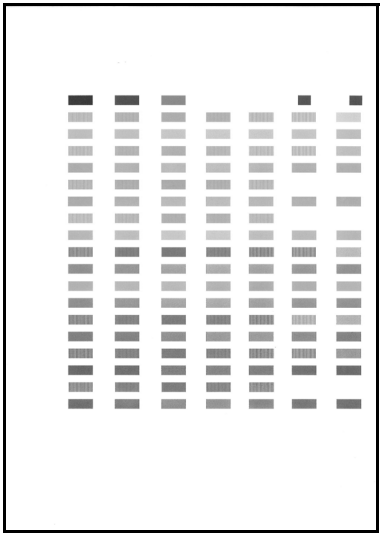

Note

- If the pattern is not printed successfully, refer to “Eleven flashes” in “**Handling Error Messages**” on page 77.
- If results of Automatic Print Head Alignment are not satisfactory, refer to “Routine Maintenance” of the *User’s Guide* and align the Print Head manually.
- The pattern is printed in black and blue.

Macintosh

1 **With the printer on, load a sheet of Letter-sized plain paper in the Auto Sheet Feeder.**

2 **Open the Canon IJ Printer Utility dialog box.**

(1) Select **Applications** from the **Go** menu, and then double-click the **Utilities** folder.

(2) Double-click the **Printer Setup Utility** icon.
When using Mac OS X v.10.2, double-click the **Print Center** icon.

(3) Select the name of your printer from the **Name** list and click **Utility**.
When using Mac OS X v.10.2, select the name of your printer from the **Name** list and click **Configure**.

(4) Select the name of your printer from the **Product** list and click **Maintenance**.

3 **Print the pattern.**

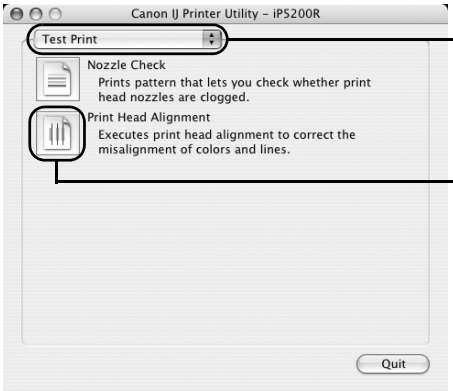

(1) Select **Test Print** from the pop-up menu.

(2) Click **Print Head Alignment**.

(3) Read the message and click **Print Head Alignment**.

Important It takes about four minutes to complete printing. Do not open the Top Cover while printing.

Note Clicking **Check Setting** prints the current settings and finishes the print head alignment.

4 Check the printed pattern.

If the pattern is printed as shown below, the Print Head is aligned automatically. The printer is now ready to use.

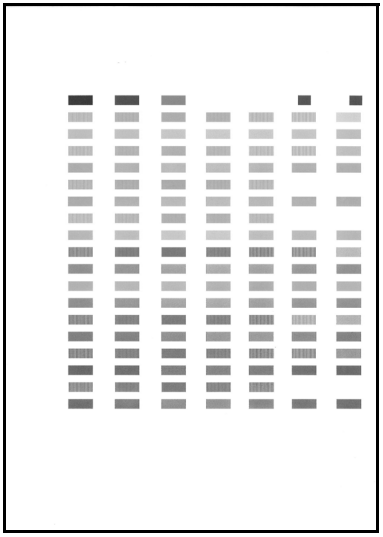

Note

- If the pattern is not printed successfully, refer to “Eleven flashes” in “**Handling Error Messages**” on page 77.
- If results of Automatic Print Head Alignment are not satisfactory, refer to “Routine Maintenance” of the *User’s Guide* and align the Print Head manually.
- The pattern is printed in black and blue.

Troubleshooting

This section provides troubleshooting tips for the most common printing problems. Troubleshooting usually falls into one of the following categories.

- **"Cannot Install the Printer Driver"** on page 65
- **"Cannot Connect to PC Properly"** on page 66
- **"Print Results Not Satisfactory or Contains Errors"** on page 67
- **"Troubleshooting Printer Hardware"** on page 70
- **"Paper Does Not Feed Properly"** on page 72
- **"Paper Jams"** on page 73
- **"Handling Error Messages"** on page 77
- **"An Error Message Appears on the Screen"** on page 79
- **"Cannot Print Properly from the Digital Camera"** on page 82

Refer to the *User's Guide* for additional information on topics not covered in this section.

Windows

When an Error Occurs

When an error occurs in printing such as the printer is out of paper or paper jams, a troubleshooting message is displayed automatically. Take the appropriate action described in the message.
The message may vary depending on the version of your Windows operating system.

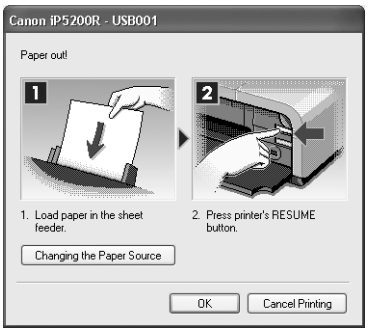

Cannot Install the Printer Driver

Problem	Possible Cause	Try This
Cannot Install the Printer Driver	Installation procedure not followed correctly	Follow the *Setup Guide* packaged with your printer for proper printer driver installation. **Windows** If the installer was forced to be terminated due to an error, Windows may be unstable. Remove the CD-ROM from the CD-ROM drive and restart your computer. Reinstall the printer driver. If this problem persists, refer to your Windows documentation for more information.
	Installation does not start automatically when the *Setup Software & User's Guide CD-ROM* is inserted into the drive	**Windows** If the printer driver installation did not start automatically when you inserted the *Setup Software & User's Guide CD-ROM* into the CD-ROM drive: 1. Click **Start** and select **My Computer**. 2. Double-click the **CD-ROM** icon. For non-Windows XP, open the **My Computer** window, and then double-click the **CD-ROM** icon. **Macintosh** Double-click the **CD-ROM** icon on your desktop to start installation. If the **CD-ROM** icon is not displayed on the desktop, there is a problem with the CD-ROM. Contact the Customer Care Center.
	Windows Unable to proceed beyond the **Printer Connection** screen	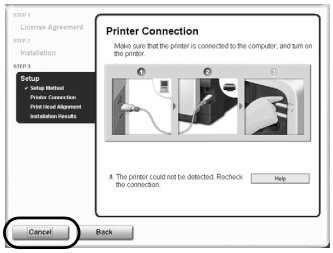 **Reinstall the printer driver.** 1. Click **Cancel** on the **Printer Connection** screen. 2. Click **Start Over** on the **Installation Failure** screen. 3. Click **Back** on the screen that appears next. 4. Click **Exit** on the Welcome screen, then remove the CD-ROM. 5. Turn the printer off. 6. Check the cable connection. 7. Restart the computer. 8. Make sure no other applications (including anti-virus programs) are running. 9. Carefully follow the procedures described in the *Setup Guide* and reinstall the driver.

Cannot Connect to PC Properly

Problem	Possible Cause	Try This
Printing Speed Is Slow / USB 2.0 Hi-Speed Connection Does Not Work	Your environment is not fully compatible with USB 2.0.	If your environment is not fully compatible with USB 2.0, the printer will operate at a lower speed provided under USB 1.1. Check the following to ensure that your PC environment supports USB 2.0 Hi-Speed connection. ● The USB port on your PC supports USB 2.0 Hi-Speed connection. ● Both the USB cable and USB hub support USB 2.0 Hi-Speed connection. Be sure to use a certified USB 2.0 Hi-Speed cable. You are recommended to use the cable no longer than 3 meters. ● Your PC supports the USB 2.0 Hi-Speed connection. Obtain the latest version of the OS update program and install it on your PC. ● The USB 2.0 Hi-Speed driver operates properly. Obtain the latest version of the USB 2.0 Hi-Speed driver and install it on your PC. Important For details on checking the above, contact the maker of your computer, USB cable, or USB hub.
Windows When you connect to a computer running Windows XP, the screen shows the warning message "High-SPEED USB Device Plugged into non-High-SPEED USB Hub"	Your environment is not fully compatible with USB 2.0.	See "**Printing Speed Is Slow / USB 2.0 Hi-Speed Connection Does Not Work**" on page 66.

Print Results Not Satisfactory or Contains Errors

Problem	Possible Cause	Try This
Ink does not eject properly/Printing is Blurred/Colors are Wrong/White Streaks appear	Print Head nozzles are clogged	Open the Top Cover and check if all ink tank lamps are lit. See **"Replacing an Ink Tank"** on page 37. Print the nozzle check pattern to check for uneven ink output. See **"Printing the Nozzle Check Pattern"** on page 47. When a specific color is missing from the nozzle check pattern, clean the Print Head. See **"Print Head Cleaning"** on page 52.
	Print Head is misaligned	Perform Automatic Print Head Alignment. See **"Aligning the Print Head"** on page 60. If this does not solve the problem, refer to "Routine Maintenance" of the *User's Guide* and align the Print Head manually.
	Paper loaded wrong side up	Check the print side of the paper. **Note** Follow the instructions packaged with your specialty media for loading and handling.
	Incorrect paper type	**Windows** On the **Main** tab of the printer driver, ensure that the **Media Type** selected matches the paper loaded. **Macintosh** In the **Print** dialog box of the printer driver, select **Quality & Media** from the pop-up menu, and then ensure that the **Media Type** selected matches the paper loaded.
	Glossy photo paper other than the Canon specialty media is used	Select **Other Photo Paper** from **Media Type**. It may resolve the problem. Load one sheet at a time and remove each sheet as soon as it is printed.
	Print Quality is not set properly	Be sure to set the **Print Quality** setting to **High** in Windows, or **Fine** in Macintosh. **Windows** 1. Open the printer properties dialog box. 2. On the **Main** tab, click **High** for the **Print Quality** setting. When you cannot choose the **High** setting or when the print quality does not improve, select **Custom**, click **Set** and then adjust the **Quality** bar for higher print quality. **Macintosh** 1. Open the **Print** dialog box. 2. Select **Quality & Media** from the pop-up menu and then click **Detailed Setting**. 3. Drag the **Print Quality** slide bar to the **Fine** end.

Problem	Possible Cause	Try This
Printed Ruled Lines are Displaced	Print Head is misaligned	Align the Print Head. See "**Aligning the Print Head**" on page 60.
	Print Quality not set properly	Be sure to set the **Print Quality** setting to **High** in Windows, or **Fine** in Macintosh. **Windows** 1. Open the printer properties dialog box. 2. On the **Main** tab, click **High** for the **Print Quality** setting. When you cannot choose the **High** setting or when the print quality does not improve, select **Custom**, click **Set** and then adjust the **Quality** bar for higher print quality. **Macintosh** 1. Open the **Print** dialog box. 2. Select **Quality & Media** from the pop-up menu and then click **Detailed Setting**. 3. Drag the **Print Quality** slide bar to **Fine** end.
Printed Paper Curls or Ink Blots	Paper being used is too thin	Use High Resolution Paper, Photo Paper Pro or other Canon specialty paper to print images that have high color saturation.
	Incorrect paper type	**Windows** On the **Main** tab of the printer driver, ensure that the **Media Type** selected matches the paper loaded. **Macintosh** In the **Print** dialog box of the printer driver, select **Quality & Media** from the pop-up menu, and then ensure that the **Media Type** selected matches the paper loaded.
Printed Surface is Scratched/Back of Paper is Smudged	Inappropriate paper type is used	Check to see if the paper you are printing on is too thick or curled. See "**Print Media to Avoid**" on page 4. Note that smudging may occur at the top and bottom edges of the paper when using **Borderless Printing**. Ensure that the paper you are using is compatible with **Borderless Printing**.
	Paper feed roller is dirty	Clean the paper feed roller. See "**Paper Does Not Feed Properly**" on page 72.
	Inside of the printer is dirty	If the inside of the printer is dirty, printed paper may be smudged. Periodically clean the inside of the printer. See "Cleaning the Inside of the Printer" in the *User's Guide*.

Problem	Possible Cause	Try This
Printed Surface is Scratched/Back of Paper is Smudged	Thick paper is used	Select the **Prevent paper abrasion** check box to widen the clearance between the Print Head and the loaded paper. **Note** Clear the **Prevent paper abrasion** check box once printing is complete. **Windows** 1. Open the printer properties dialog box. 2. Click the **Maintenance** tab and then **Custom Settings**. **Important** **In Windows XP and Windows 2000** When not logged on as a computer administrator or Administrators, you cannot open the **Custom Settings** dialog box. For further information on how to log on as an administrator, refer to your Windows documentation. 3. Select the **Prevent paper abrasion** check box and click **Send**. Click **OK** when the confirmation message appears. **Macintosh** 1. Open the **Canon IJ Printer Utility** dialog box. 2. Select **Custom Settings** from the pop-up menu. 3. Select the **Prevent paper abrasion** check box. When the **Prevent paper abrasion** check box is selected in the printer properties dialog box (Windows) or selected from **Custom Settings** in the **Canon IJ Printer Utility** dialog box (Macintosh), the setting is also applied under direct printing with the digital camera. **Note** Paper abrasion can be prevented by pressing the **RESUME/CANCEL** button on the printer. With the printer on, hold down the **RESUME/CANCEL** button until the **POWER** lamp flashes green seven times, and then release the button. To cancel the setting, turn off the printer.
	Media is curled	If the paper is curled, it may become marked or not feed properly. Use paper after correcting paper curl as follows. 1. Place the paper on a flat surface with the print side*1 face up, then cover it with plain regular paper to avoid damaging the surface. 2. Roll up the paper in the opposite direction as shown in the figure below. 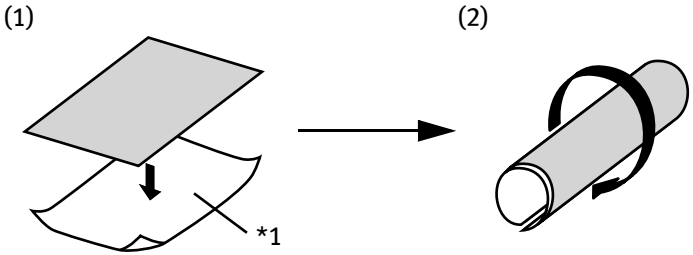 3. Check the printing paper if paper curl is corrected within approximately 2 to 5 mm / 0.08 to 0.2 in*2. It is recommended to print the curl-corrected paper one sheet at a time. 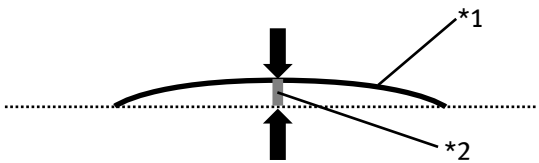

Troubleshooting Printer Hardware

Problem	Possible Cause	Try This
Printer Does Not Start or Printer Stops During Print Jobs	Ink tank is empty	If the ink tank lamp is flashing fast, ink is empty. Replace the ink tank and close the Top Cover. If printing is not finished yet, just press the **RESUME/CANCEL** button on the printer to continue printing in the "no ink" state. Replace the ink tank as soon as possible after printing finishes. Continuing to print in the "no ink" state may cause damage to the printer. See "**Replacing an Ink Tank**" on page 37. **Note** If multiple ink tank lamps are flashing, check how fast they flash. Fast flashing (at about one second interval) indicates the ink is empty. Slow flashing (at about three second interval) indicates ink is low. For details on different flashing speeds, see "**Getting the Ink Level Information**" on page 38.
	Ink tank is not installed in the correct position	If an ink tank lamp is flashing even though ink remains in that ink tank, it is inserted in the wrong position. Make sure that the correct ink tank color is inserted in each position. See "**Replacing an Ink Tank**" on page 37.
	Ink tank is not fully inserted	When the ink tank lamp is unlit, press the PUSH mark on the ink tank until it clicks into place. The ink tank lamp lights red when the ink tank is fully inserted. Make sure all of the orange tape is peeled off the ink tank as illustrated in Figure 1. If any orange parts are left like in Figure 2, remove all of the orange parts. 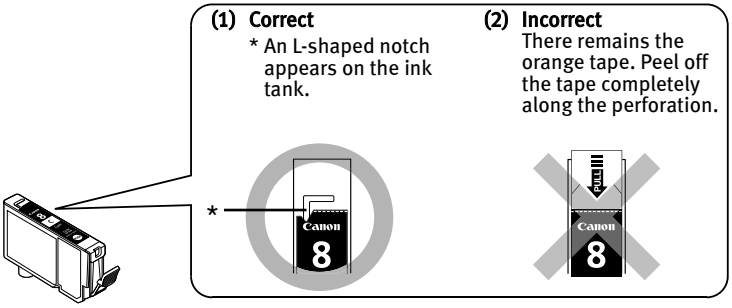

Problem	Possible Cause	Try This
Printer Does Not Start or Printer Stops During Print Jobs	There may be problems with your operating system	Restart your computer. It may solve the problem. Delete an undesired print job, if there is any. Use **Canon IJ Status Monitor** in Windows or **Printer Setup Utility** (or **Print Center**) in Macintosh for the deletion. **Windows** 1. Open the printer properties dialog box. See "**Opening the Printer Properties Dialog Box Directly from the Start Menu**" on page 35. 2. Click the **Maintenance** tab and then **View Printer Status**. 3. Click **Display Print Queue**. 4. Select **Cancel All Documents** in the **Printer** menu. **Note** **In Windows XP and Windows 2000** The print jobs may not be selected. 5. When the confirmation message is displayed, click **Yes**. The print job is deleted. **Note** **In Windows Me and Windows 98** Click to select an undesired document and select **Purge Print Documents** in the **Printer** menu. **Macintosh** 1. Select **Applications** from the **Go** menu. 2. Double-click the **Printer Setup Utility** icon in the **Utilities** folder. When using Mac OS X v.10.2, double-click the **Print Center** icon. 3. Double-click the name of your printer displayed under **Name** in the **Printer List**. 4. Click to select an undesired document and click . The print job is deleted.
Cannot Print to End of Job	Incorrect page size is selected	Ensure that the page size setting matches the size of the paper loaded in the printer: ● Check the **Paper Size** setting from within your application to ensure that it matches the size of the paper loaded. ● Check **Paper Size** on the **Page Setup** tab in the printer properties dialog box of the printer driver (Windows) or the **Page Setup** dialog box of the printer driver (Macintosh) to ensure that it matches the size of the paper loaded.
	Windows The size of the print data is too large	Check the size of the print data. For Windows XP and Windows 2000, if the size of the data is too large, part of it may be lost. When the spool format is EMF, follow the procedure below. 1. Open the printer properties dialog box. 2. On the **Page Setup** tab, click **Print Options**. 3. Select the **Reduce spool data size** check box, and click **OK**. **Important** When **Reduce spool data size** is set, the print quality may be degraded.
	Performing automatic duplex printing	Select **Use reduced printing** in the printer driver. It may solve the problem. **Important** Print layout may be altered with the reduced printing function. **Windows** 1. Open the printer properties dialog box. 2. Click **Print Area Setup** in the **Page Setup** tab and select **Use reduced printing**. **Macintosh** 1. In the **Print** dialog box, select **Duplex Printing & Margin** from the pop-up menu. 2. Select **Automatic Duplex Printing**, and select **Use reduced printing** in **Print Area**.

Paper Does Not Feed Properly

Problem	Possible Cause	Try This
Paper Does Not Feed Properly	Inappropriate paper type is used	Check to see if the paper you are printing on is too thick or curled. See "**Print Media to Avoid**" on page 4. Flatten paper when it is curled.
	Paper Feed Roller is dirty	Follow the steps described below to clean the Paper Feed Rollers. Cleaning the Paper Feed Rollers consumes them, so perform this procedure only when necessary. 1. Ensure that the printer is on and there is no paper loaded in the printer. 2. Select the Paper Feed Roller of the Auto Sheet Feeder or Cassette by pressing the Paper Feed Switch on the printer. 3. Hold down the **RESUME/CANCEL** button and release after the **POWER** lamp flashes green three times. The Paper Feed Roller rotates as it cleans. 4. Repeat step 3 twice. 5. Load three or more sheets of Letter-sized plain paper lengthways in the Auto Sheet Feeder or Cassette selected in step 2. 6. Hold down the **RESUME/CANCEL** button and release after the **POWER** lamp flashes green three times. Paper is fed and output. 7. Repeat step 6 three times. If repeating this procedure three times or more does not solve the problem, contact the Customer Care Center.
	Paper is loaded incorrectly	Always load paper in the portrait orientation in the Auto Sheet Feeder or Cassette regardless of the print direction selected in the printer driver. Ensure that paper is loaded correctly. Slide the paper guides against the paper stack. See "**Loading Paper**" on page 4.
	A large quantity of plain paper is loaded in the Auto Sheet Feeder	Depending on the environment in which it is used (high temperature/high humidity/low temperature/low humidity), some types of plain paper may not feed correctly. If this happens, reduce the number of pages loaded to about the half the recommended maximum (stack approx. 5 mm or 0.2 inches high).

Paper Jams

Problem	Possible Cause	Try This
Paper Jams	Paper jams in the Paper Output Slot/ Auto Sheet Feeder	Remove the paper according to the following procedure. 1. Slowly pull the paper out, either from the Auto Sheet Feeder or from the Paper Output Slot, whichever is easier. 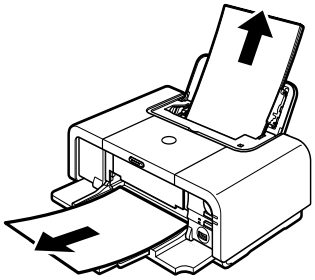 • If the paper tears and a piece remains inside the printer, open the Top Cover and remove it. **Caution** Be careful not to touch the components inside the printer at this time. After removing all paper, close the Top Cover, turn the printer off and turn it back on. • If you cannot pull the paper out, turn the printer off and turn it back on. The paper will be ejected automatically. 2. Reload the paper into the printer and press the **RESUME/CANCEL** button on the printer. If you have turned off the printer in step 1, you will need to retry printing, because this operation cancels any print jobs in progress. **Note** When reloading the paper into the printer, refer to "**Paper Does Not Feed Properly**" on page 72 to confirm that you are using the correct paper and are loading it into the printer correctly. If you cannot remove the paper or the paper tears inside the printer, or if the paper jam error continues after removing the paper, contact the Customer Care Center.

Problem	Possible Cause	Try This
Paper Jams	Landscape Credit Card-sized Paper Jams inside the Printer	You cannot load Credit Card-sized paper in the landscape orientation. Remove the paper following the procedure below. 1. Load a sheet of Credit Card-sized paper in the Auto Sheet Feeder. Do not load it in the landscape orientation. 2. Press the **POWER** button on the printer to turn off the power. It may take a while for the printer to turn completely off after the **POWER** button is pressed. 3. Press the **POWER** button again on the printer to turn on the power. The paper is fed and the jammed paper is ejected accordingly. If you cannot remove the jammed paper or the paper jam error continues after removing the paper, contact the Customer Care Center.
	Landscape 4" x 6" / 101.6 x 152.4 mm size paper loaded in the Cassette jams inside the printer	Load 4" x 6" / 101.6 x 152.4 mm media in the portrait orientation regardless of the print direction. Remove the paper following the procedure below. 1. Press the **POWER** button of the printer to turn off the power. Then, open the Rear Cover. 2. Fold a piece of Letter-sized plain paper in four, push it in until it hits the jammed paper, then pull out the paper folded in four. 3. Close the Rear Cover, then press the **POWER** button of the printer to turn on the power. Wait until the jammed paper is automatically ejected. If you cannot remove the jammed paper or the paper jam error continues after removing the paper, contact the Customer Care Center.

Problem	Possible Cause	Try This
Paper Jams	Paper jams inside the printer (Transport Unit)	Remove the paper according to the following procedure. 1. Open the Rear Cover. 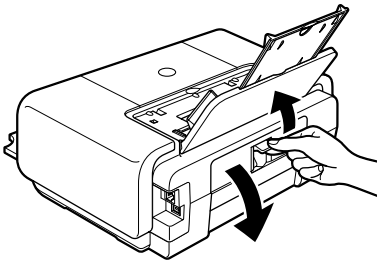 2. When you can see the jammed paper, slowly pull the paper out. 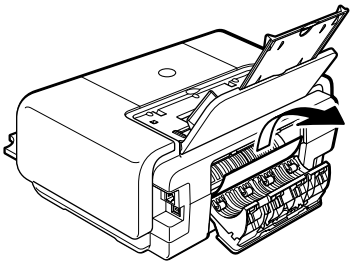 **Caution** Be careful not to touch the components inside the printer. If you cannot pull the paper out, turn the printer off and turn it back on. The paper will be ejected automatically. 3. Close the Rear Cover. 4. If you could not extract the paper in step 2, remove the Cassette. 5. Slowly pull the jammed paper out. 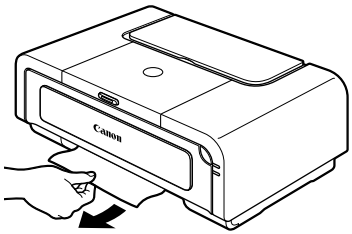 6. If any paper is sticking out of the Cassette, reload the paper in the Cassette. 7. Insert the Cassette into the printer again, and press the **RESUME/CANCEL** button on the printer. If you have turned off the printer in step 2, you will need to retry printing, because this operation cancels any print jobs in progress. **Note** When reloading the paper into the printer, refer to "**Paper Does Not Feed Properly**" on page 72 to confirm that you are using the correct paper and are loading it into the printer correctly. If you cannot remove the paper or if the paper tears inside the printer, or if the paper jam error continues after removing the paper, contact the Customer Care Center.

Problem	Possible Cause	Try This
Paper Jams	Paper jams inside the printer (Duplex Transport Section)	Remove the paper according to the following procedure. 1. Remove the Cassette. If the paper is loaded in the Auto Sheet Feeder, remove the paper from the Auto Sheet Feeder and close the Paper Support. 2. Stand the printer with the rear side down. 3. Slowly pull the jammed paper out while pulling the green cover toward you. 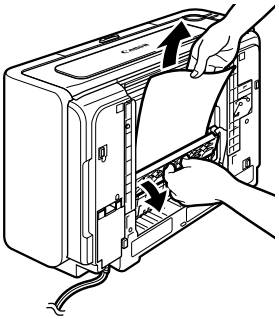 **Caution** Put back the printer immediately after removing the jammed paper. 4. If any paper is sticking out of the Cassette, reload the paper in the Cassette. Reload paper in the Auto Sheet Feeder, if necessary. 5. Insert the Cassette into the printer. 6. Press the **RESUME/CANCEL** button on the printer. **Note** When reloading the paper into the printer, refer to "**Paper Does Not Feed Properly**" on page 72 to confirm that you are using the correct paper and are loading it into the printer correctly. If you cannot remove the paper or if the paper tears inside the printer, or if the paper jam error continues after removing the paper, contact the Customer Care Center.

Handling Error Messages

When a printer error occurs, the **ALARM** lamp flashes orange in the way as shown below. The number of flashes (orange) indicates the type of error that has occurred. Count the flashes and take the appropriate action to correct the error.

Number of Flashes	Possible Cause	Try This
Two flashes	Printer is out of paper/Paper does not feed	Reload paper in the Auto Sheet Feeder or Cassette and press the **RESUME/CANCEL** button.
Three flashes	Paper jam/Paper Output Tray is closed	If paper is jammed, remove the jammed paper, reload paper in the printer, then press the **RESUME/CANCEL** button. If the Paper Output Tray is closed, open it. See "**Paper Jams**" on page 73.
Four flashes	The ink tank installed may not be installed properly/The ink has run out	Possible causes are as follows: ● The ink tank may not be installed properly (The lamp on the ink tank is off). Install the appropriate ink tank. ● The ink has run out (The lamp on the ink tank flashes). Replace the ink tank, and close the Top Cover. If printing is in progress and you want to continue printing, press the **RESUME/CANCEL** button with the ink tank installed. Then printing can continue under the ink out condition. Replace the empty ink tank immediately after the printing. The printer may be damaged if printing is continued under the ink out condition. **Note** If multiple ink tank lamps are flashing, check how fast they flash. Fast flashing (at about one second interval) indicates the ink is empty. Slow flashing (at about three second interval) indicates ink is low. For details on different flashing speeds, see "**Getting the Ink Level Information**" on page 38.
Five flashes	Print Head not installed/Print Head not installed correctly/Defective Print Head	Install the Print Head. If the Print Head is already installed, remove the Print Head and reinstall it. If this error still remains, the Print Head may be damaged. Contact the Customer Care Center.
Six flashes	Inner Cover is open	Close the Inner Cover and press the **RESUME/CANCEL** button. Do not open or close the Inner Cover during printing because this can damage the printer.
Seven flashes	The ink tank is not installed in the appropriate position	Possible causes are as follows: ● Some ink tanks are not installed in place. ● More than one ink tanks of the same color are installed. Confirm that the ink tanks are installed in the appropriate positions. See "**Replacing an Ink Tank**" on page 37.
Eight flashes	Waste ink absorber almost full	The printer has a built-in waste ink absorber for the ink used during print head cleaning, for example. Eight flashes indicates that the waste ink absorber is nearly full. Press the **RESUME/CANCEL** button to cancel the error so you can continue printing. Before the waste ink absorber becomes completely full, contact the Customer Care Center. (You will need to replace a particular part of the printer.) **Important** Canon recommends that you call for service as soon as this error occurs. Once the waste ink absorber becomes completely full, printing cannot be performed until the Waste ink tank is replaced.

Number of Flashes	Possible Cause	Try This
Nine flashes	A specified period of time has elapsed without receiving a response from the digital camera/The digital camera or digital video camcorder connected is not compatible with this printer	Disconnect the camera cable and reconnect it. **Note** Depending on the model or brand of your device, you may have to select a print mode compliant with PictBridge before connecting the device. You may also have to turn on the device or select Play mode manually after connecting the device to the printer. Perform necessary operations according to the instruction manual supplied with your device. If the error is still unresolved, there is a possibility that you are using a digital camera or digital video camcorder that is not supported by this printer. Use a digital camera or digital video camcorder compatible with this printer.
Ten flashes	Cannot print on both sides of the page	The size of paper may not be compatible with automatic duplex printing. Pressing the **RESUME/CANCEL** button will discharge the paper, and restart printing from the front side of the next paper. The reverse side will not be printed when an error occurs. The sizes of media suitable for automatic duplex printing are Letter and 5" x 7"/ 127.0 x 177.8 mm.
Eleven flashes	Automatic print head alignment failed	Possible causes are as follows: ● Letter-sized paper is not loaded on the Auto Sheet Feeder. Press the **RESUME/CANCEL** button on the printer to clear the error, then load one sheet of Letter-sized paper in the Auto Sheet Feeder. Automatic print head alignment cannot be performed using paper from the Cassette. For automatic print head alignment, always load paper in the Auto Sheet Feeder. ● Print Head nozzles are clogged. Press the **RESUME/CANCEL** button on the printer to clear the error, and then print out the nozzle check pattern to examine the print head condition. See "**Printing the Nozzle Check Pattern**" on page 47 for information on how to print a nozzle check pattern. ● The Paper Output Slot has been exposed to a strong light source preventing correct print head alignment. Press the **RESUME/CANCEL** button to clear the error and move the printer to a darker location. After carrying out the above measures, if the problem continues after aligning the Print Head again, press the **RESUME/CANCEL** button to clear the error, and then perform manual print head alignment. For details on manual print head alignment, refer to "Aligning the Print Head" in the *User's Guide*.
Thirteen Flashes	The remaining level of the ink tank cannot be correctly detected	An ink tank that was once empty is installed. Replace the ink tank. Printing under the situation may damage the Print Head. Canon shall not be liable for any printer malfunction or damage caused by refilled ink tanks. If you want to continue printing with the refilled ink tank installed, press and hold the **RESUME/CANCEL** button for at least 5 seconds, and then release it. Using refilled ink tanks are memorized. * This operation will release the function for detecting the remaining ink level.
Fourteen flashes	The ink tank cannot be recognized	The ink tank may not be compatible with this printer (The lamp on the ink tank is off). Install the appropriate ink tank. See "**Replacing an Ink Tank**" on page 37.
Fifteen flashes	The ink tank cannot be recognized	Ink tank errors have occurred (The lamp on the ink tank is off). Replace the ink tank. See "**Replacing an Ink Tank**" on page 37.

Number of Flashes	Possible Cause	Try This
Note	**POWER** (green) and **ALARM** (orange) lamps flash alternately	An error that requires contacting the Customer Care Center may have occurred. Disconnect the printer cable from the printer, and then turn the printer off and unplug the printer from the power supply. Plug the printer back in and turn the printer back on after leaving it for a while. If the problem remains, contact the Customer Care Center.

An Error Message Appears on the Screen

Problem	Possible Cause	Try This
Windows Writing Error/ Output Error or Communication Error in USBnnn or MPUSBPRNnn ("n" represents a number)	Printer is not ready	Ensure that the **POWER** lamp lights. If the **POWER** lamp is off, turn the printer on. The **POWER** lamp will flash green when the printer is initializing. Wait until the **POWER** lamp stops flashing. When the **ALARM** lamp is flashing orange, an error may have occurred in the printer. For details on how to resolve the error, refer to "**Handling Error Messages**" on page 77.
	Paper is not loaded	Load paper and press the **RESUME/CANCEL** button. If paper is loaded, ensure that the paper source is selected correctly. Select the paper source with the Paper Feed Switch on the printer, or select it in the printer driver.
	Printer port setting does not match the interface connected to the printer	Check the printer port settings. 1. Click **Start** and select **Control Panel**, **Printers and Other Hardware**, and then **Printers and Faxes**. For non-Windows XP, click **Start**, select **Settings**, and then **Printers**. 2. Select the icon of your printer. 3. Open the **File** menu and select **Properties**. 4. Click the **Ports** tab (or the **Details** tab) to confirm the port settings. A USB port is selected if either **USBnnn (Canon iP5200R)** or **MPUSBPRNnn (Canon iP5200R)** (where n is a number) is indicated. If the port setting is not correct, change the port setting according to the interface you are using on the **Ports** tab (or the **Details** tab), or reinstall the printer driver.
	Faulty connection	Ensure that the printer cable is securely connected to the computer. Note ● If using a switching hub or other device, disconnect the printer and reconnect it directly to the computer and try printing again. If successful, the problem may have been with the device. ● There could also be a problem with the cable(s). Replace the cable(s) and try printing again.
	Printer driver is not installed properly	Uninstall then reinstall the printer driver. 1. Click **Start**, and select **All Programs** (or **Programs**), the name of your printer, and **Uninstall**. 2. Follow the on-screen instructions to uninstall the driver. 3. Follow the procedures described in the *Setup Guide* and reinstall the printer driver.

Problem	Possible Cause	Try This
Windows Writing Error/Output Error in CNBJNP nnnnnn	Printer is not ready	Ensure that the **POWER** lamp lights green. If the **POWER** lamp is off, turn the printer on. The **POWER** lamp will flash green when the printer is initializing. Wait until the **POWER** lamp stops flashing. When the **ALARM** lamp is flashing orange, an error may occur in the printer. For details on how to resolve the error, refer to "**Handling Error Messages**" on page 77.
	Paper is not loaded	Load paper and press the **RESUME/CANCEL** button. If paper is loaded, ensure that the paper source is selected correctly. Select the paper source with the Paper Feed Switch on the printer, or select it in the printer driver.
	Printer port setting does not match the interface connected to the printer	Check the printer port settings. 1. Open the Printer Properties dialog box. See "**Opening the Printer Properties Dialog Box Directly from the Start Menu**" on page 35. 2. Click the Port tab (or the Details tab) and select CNBJNPnnnnnn ("n" represents a number) as the printer port to be used.
	The settings of both the access point and the printer are not identical	Check the settings of the access point and modify the settings of printer as same as those of the access point. For information on the access point settings, refer to the access point manual. For information on how to set a WEP, refer to "How to set a WEP key" of "Troubleshooting" in the *Network Guide*.
	The network setting of the computer is not correct	Make sure that the computer can communicate with the access point.
	The radio status is poor	Adjust the installation positions and the antenna direction while monitoring the radio status with IJ Network Tool.
	The distance between printer and access point is too far	Relocate the printer and access point as closely together as is possible.
	There is an obstruction or a source of radio wave interference	Communication between different rooms or floors is generally poor. Adjust the installation locations of the devices. There may be a device such as a microwave oven that is using the same frequency bandwidth as the wireless station. Place the wireless LAN devices as far away from the radio wave interference source as possible.
	Printer setup is not completed/The printer driver is not installed	Complete the printer setup. If the printer driver in not installed, follow the procedure described in the *Setup Guide* to install the printer driver.
	Access control is configured on the access point	On the access point, additionally register the IP address or MAC address of the printer and the computer, or disable the access control.
	The access control is set to the printer	Print out the network setting information and verify if the IP address filtering or the MAC address filtering is enabled on the printer. For details on printing the network setting information, see "Printing Out Network Setting Information" of "Changing and Confirming Network Settings" in the *Network Guide*. If the printer is configured to use the access control, register the IP address or the MAC address of your computer to the printer. For details on settings, see "Changing the Settings in the Access Control Tab (Windows)" or "Changing the Settings in the Access Control Tab (Macintosh)" of "Changing and Confirming Network Settings" in the *Network Guide*.

Problem	Possible Cause	Try This
Cannot print with Automatic Duplex Printing	Incorrect paper size is selected	Check the **Paper Size** setting from within your application to ensure that it matches the size of the paper loaded. Check **Paper Size** on the **Page Setup** tab in the printer properties dialog box (Windows) or the **Page Setup** dialog box (Macintosh) to ensure that it matches the size of the paper loaded. The sizes of media suitable for automatic duplex printing are Letter and 5" x 7"/ 127.0 x 177.8 mm. **Note** To print on both sides of the page manually, follow the procedure below. **Windows** On the **Page Setup** tab, clear the **Automatic** check box. Then try printing again. **Macintosh** The manual duplex printing function cannot be used.
Macintosh "Error No.: 300"	Printer is not ready	Ensure that the **POWER** lamp lights green. If the **POWER** lamp is off, turn the printer on. The **POWER** lamp will flash green when the printer is initializing. Wait until the **POWER** lamp stops flashing. When the **ALARM** lamp is flashing orange, an error may have occurred in the printer. For details on how to resolve the error, refer to "**Handling Error Messages**" on page 77.
	Printer is not properly connected	Ensure that the printer is securely connected to the computer. **Note** ● If using a switching hub or other device, disconnect the printer and reconnect it directly to the computer and try printing again. If successful, the problem may have been with the device. ● There could also be a problem with the cable(s). Replace the cable(s) and try printing again.
	Printer you want to use is not selected on the **Printer** pop-up menu on the **Print** dialog box	Select **iP5200R** on the **Printer** pop-up menu on the **Print** dialog box. If **iP5200R** does not appear on the **Printer** pop-up menu, do the following to confirm the printer settings: 1. Select **Edit Printer List** from the **Printer** pop-up menu on the **Print** dialog box. The **Printer List** opens. 2. Ensure that the **iP5200R** is selected in the **Printer List**. If **iP5200R** is not displayed in the **Printer List**, click **Add** to add the printer. For details, refer to the Printer Setup Utility Help in the Mac Help.
Macintosh "Error No.: 306"	Cannot print over the wireless LAN	Make sure that the printer is turned on. The printer cannot communicate through the network, refer to "Troubleshooting" in the *Network Guide*.
Macintosh "Error No.: 1700"	Waste ink absorber almost full	The printer has a built-in waste ink absorber to hold the ink used during print head cleaning, for example. This error message indicates that this ink absorber is nearly full. Press the **RESUME/CANCEL** button to clear the error so you can continue printing. Before the waste ink absorber becomes completely full, contact the Customer Care Center. When you experience this error, you will need to call for servicing to replace the waste ink absorber and to check the printer for proper operation.
Macintosh "Error No.: 1851"	Inner Cover is open when printing starts	Close the Inner Cover, then press the **RESUME/CANCEL** button.
Macintosh "Error No.: 1856"	Inner Cover is opened while printing	Close the Inner Cover, then press the **RESUME/CANCEL** button. One page of the print data being sent at the time of the error will be erased, so print that page again.

Problem	Possible Cause	Try This
Macintosh “Error No.: 2001”	A specified period of time has elapsed without receiving a response from the digital camera/The digital camera or digital video camcorder connected is not compatible with this printer	Disconnect the camera cable and reconnect it. **Note** Depending on the model or brand of your device, you may have to select a print mode compliant with PictBridge before connecting the device. You may also have to turn on the device or select Play mode manually after connecting the device to the printer. Perform necessary operations according to the instruction manual supplied with your device. If the error is still unresolved, there is a possibility that you are using a digital camera or digital video camcorder that is not supported by this printer. Use a digital camera or digital video camcorder compatible with this printer.
Macintosh “Error No.: 2500”	Automatic Print Head alignment failed	See “Eleven flashes” in “**Handling Error Messages**” on page 77.

Cannot Print Properly from the Digital Camera

The following are the possible errors that may occur when printing directly from a digital still camera or digital video camcorder*, and the countermeasures to eliminate them.

*Hereafter, the digital still camera and digital video camcorder are collectively called a digital camera or camera.

Camera Error Message	Possible Cause	Try This
Printer in use/Printer warming up	Images are being printed from the computer	Wait until printing ends. The printer automatically starts printing the images from the camera after completing the current printing.
	The printer is warming up	Wait until warm-up ends. When it is ready, the printer starts printing automatically.
No paper /Paper Error	No paper is loaded	Load paper in either the Auto Sheet Feeder or Cassette which you have selected with the Paper Feed Switch on the printer, and select **Continue**[*1] in the display on your camera.
	The Paper Output Tray is closed	Open the Paper Output Tray to resume printing.
	The Inner Cover is open	Close the Inner Cover and select **Stop** in the display on your camera to stop printing.
Paper jam	A paper is jammed in the printer	Select **Stop** in the display on your camera to stop printing. Remove the jammed paper, load new paper, and press the **RESUME/CANCEL** button on the printer and retry printing.
Printer cover open	The Top Cover is open	Close the Top Cover on the printer.
No printhead	The Print Head is defective or not installed (The **ALARM** lamp on the printer flashes orange five times.)	Install a Print Head according to the *Setup Guide*. If the Print Head has already been installed, remove the Print Head and reinstall it. If the error still remains, the Print Head may be defective. Contact the Customer Care Center.
Waste tank (ink absorber[*2]) full	The waste ink absorber is nearly full	The printer has a built-in waste ink absorber to hold the ink used during print head cleaning, for example. This error message indicates that the waste ink absorber is nearly full. You can continue printing by selecting **Continue**[*1] on the display on your camera. However, because printing is disabled once the waste ink absorber becomes completely full and until the waste ink tank is replaced, you are recommended to contact the Customer Care Center as early as possible. (You will need to replace a particular part of the printer.)

Camera Error Message	Possible Cause	Try This
Low ink level	It is about time to replace the ink tank with a new one	Slow flashing (about three second in red) of an ink tank lamp indicates that ink in this tank is low. Prepare a new ink tank. Select **Continue**[*1] in the display on your camera to resume printing.
No ink	The ink tank may not be installed properly (Printer **ALARM** lamp flashes orange four times/Ink tank lamp is off)	Install the appropriate ink tank.
	The ink has run out (Printer **ALARM** lamp flashes orange four times/Ink tank lamp flashes fast (at about one second interval))	Replace the ink tank, and close the Top Cover. If printing is in progress and you want to continue printing, select **Continue**[*1] in the display on your camera with the ink tank installed. Then printing can continue under the ink out condition. Replace the empty ink tank immediately after the printing. The printer may be damaged if printing is continued under the ink out condition. **Note** If multiple ink tank lamps are flashing, check how fast they flash. Fast flashing (at about one second interval) indicates the ink is empty. Slow flashing (at about three second interval) indicates ink is low. For details on different flashing speeds, see "**Getting the Ink Level Information**" on page 38.
	Some ink tanks are not installed in place, or more than one ink tanks of the same color are installed (Printer **ALARM** lamp flashes orange seven times/Ink tank lamp flashes fast (at about one second interval))	Confirm that the ink tanks are installed in the appropriate positions. See "**Replacing an Ink Tank**" on page 37.
	The ink tank may not be compatible with this printer (Printer **ALARM** lamp flashes orange fourteen times/Ink tank lamp is off)	Install the appropriate ink tank.
Ink Error/No ink	An ink tank that was once empty is installed (Printer **ALARM** lamp flashes orange thirteen times)	Replace the ink tank. Printing under the situation may damage the Print Head. Canon shall not be liable for any printer malfunction or damage caused by refilled ink tanks. If you want to continue printing with the refilled ink tank installed, press and hold the **RESUME/CANCEL** button for at least five seconds, and then release it. Using refilled ink tanks are memorized. * This operation will release the function for detecting the remaining ink level.
Hardware Error/No ink	Ink tank errors have occurred (Printer **ALARM** lamp flashes orange fifteen times)	Replace the ink tank.
Printer error	An error requiring servicing might have occurred (Printer **POWER** lamp flashes green and **ALARM** lamp flashes orange alternately)	Disconnect the cable between the printer and the camera, turn off the printer, and unplug the power cord of the printer from the power supply. After a while, plug the power cord of the printer back in, turn on the printer, and then reconnect the camera to the printer. If the same error occurs, contact the Customer Care Center.

*1 To resume printing, you can press the **RESUME/CANCEL** button on the printer instead of selecting **Continue**.

*2 The waste ink absorber absorbs ink used during cleaning, for example. If this message appears, you will need to call for servicing to replace the absorber and to check the printer for proper operation.

Note

- PictBridge or Canon Bubble Jet Direct compatible digital cameras can be connected to your printer for direct printing.
- This section describes errors that are indicated on Canon-brand PictBridge- or Bubble Jet Direct-compatible cameras. The error messages and operations may vary depending on the camera you are using.
  For errors on non-Canon PictBridge-compatible cameras, count the number of flashes (in orange) the **ALARM** lamp on the printer makes and check for the cause of the error and take the appropriate action. For details, see "**Handling Error Messages**" on page 77.
- Connecting a digital camera not compatible with PictBridge or Bubble Jet Direct makes the **ALARM** lamp on your printer flash (in orange) nine times. In such a case, unplug the cable connecting the camera to the printer.
- A communication time out occurs if printing takes a long time or if it takes too much time to send data. This may stop printing. In such a case, disconnect the cable between the printer and the camera, and reconnect it. Then, turn the camera on, if it does not automatically turn on. If the problem is still unresolved, select some other photo and check if it can be printed or not.
- Depending on the model or brand of your PictBridge compliant device, you may have to select a print mode before connecting the device.
  You may also have to turn on the device or select Play mode manually after connecting the device to the printer.
  Perform necessary operations according to the instruction manual supplied with your device.
- The print head nozzles may be clogged if printing becomes faint or colors are incorrect. See "**When Printing Becomes Faint or Colors are Incorrect**" on page 46.
- If the paper is curled or its surface is scratched during printing, make sure that you are using the correct type of paper. If this error occurs even when you are using the correct type of paper, select **Prevent paper abrasion** on **Custom Settings** in the printer driver. See "**Print Results Not Satisfactory or Contains Errors**" on page 67.
- To disconnect the cable connected between the digital camera and printer, follow the procedure below.
  1. Disconnect the cable from the printer.
  2. Turn off the digital camera.
  3. Disconnect the cable from the digital camera.

  When disconnecting the cable, be sure to hold the connector by its sides.
- For the errors indicated on the camera and their solution, also refer to the user's manual of the camera. For other troubles on the digital camera, contact the manufacturer.

Appendix

Printing Photographs Directly from a Canon Bubble Jet Direct Compatible Digital Camera

Let's take a look at the media types that can be set on the Canon Bubble Jet Direct compatible digital camera connected to this printer and their limitations.

Media Types for Digital Camera

When you connect a digital camera, you can use the following media:

Digital Camera Setting	Media Type
Card #1	Photo Paper Pro 4" x 6" / 101.6 x 152.4 mm
Card #2	Photo Paper Plus Glossy 4" x 6" / 101.6 x 152.4 mm
	Photo Paper Plus Semi-gloss 4" x 6" / 101.6 x 152.4 mm
	Glossy Photo Paper 4" x 6" / 101.6 x 152.4 mm
Card #3	Photo Paper Plus Glossy 5" x 7" / 127.0 x 177.8 mm
LTR	Photo Paper Pro Letter
	Photo Paper Plus Glossy Letter
	Photo Paper Plus Semi-gloss Letter
	Glossy Photo Paper Letter
A4	Photo Paper Pro A4
	Photo Paper Plus Glossy A4
	Photo Paper Plus Semi-gloss A4
	Glossy Photo Paper A4

Note

- For the digital camera operation method and troubleshooting, refer to your digital camera manual. For print error messages, see "**Cannot Print Properly from the Digital Camera**" on page 82.
- By operating the digital camera, you can make the following prints:
  - You can make a standard print from the image displayed in the single display mode or in the index display mode.
  - You can print specified numbers of images, or make an index print by editing the DPOF.
  - For the images taken with an ExifPrint-compatible digital camera, the ExifPrint function can be used.
  - If date printing is set from the digital camera, the date when the photograph was taken is to be printed (excluding the index print).
  - Images will be scaled automatically according to the image size set on the digital camera and the size of the media set on the printer.

- The digital camera does not support the following functions:
  - Print quality setting
  - Printer maintenance
- Images other than Exif may not be index-printed.

Specifications

Printer

Maximum resolution (dpi):	**9600 (horizontal)* x 2400 (vertical)** * Ink droplets can be placed with a pitch of 1/9600 inch at minimum.
Print speed * * Print speed will vary depending on system configuration, software, document complexity, print mode and page coverage.	**Black printing (text pattern)** **Max Speed (Custom Setting 5): 30 ppm** **Standard: 15.0 ppm** **Color printing** **Max Speed (Custom Setting 5): 24 ppm** **Standard: 11.7 ppm**
Print width:	**203.2 mm max. (8.0 inches)** **(for Borderless Printing: 215.9 mm / 8.5 inches)**
Resident print control mode:	**Canon extended mode**
Receive buffer:	**42 KB**
Interface (USB):	**USB 2.0 Hi-Speed / Direct Print Port** * All operations are not guaranteed for computers standard-equipped with a USB 2.0 Hi-Speed interface. * Since the USB 2.0 Hi-Speed interface is fully upwardly compatible with USB Full-Speed (USB 1.1), it can be used at USB Full-Speed (USB 1.1). **Wireless LAN Interface (IEEE802.11g/IEEE802.11b)** **Wired LAN Interface (RJ-45)**
Acoustic noise level:	**Approx. 34.7 dB (A) (in the highest print quality mode)**
Operating environment:	**Temperature: 5 to 35°C (41 to 95°F)** **Humidity: 10 to 90%RH (no condensation)**
Storage environment:	**Temperature: 0 to 40°C (32 to 104°F)** **Humidity: 5 to 95% RH (no condensation)**
Power supply:	**AC 110-120 V, 50/60 Hz** **AC 220-240 V, 50/60 Hz**
Power consumption:	**Standby: Approx. 3 W** **Printing: Approx. 19 W** **OFF: Approx. 0.4 W**
Dimensions (with the Paper Support and Paper Output Tray retracted):	**444 (W) x 309 (D) x 160 (H) mm** **17.4 (W) x 12.1 (D) x 6.4 (H) inches**
Weight:	**7.5 kg (16.5 lb.)**
Print Head:	**Black (PGI-5BK): 512 nozzles** **Cyan, Magenta, Yellow, Black (CLI-8BK): 512 x 6 nozzles**

Network

Protocol	**TCP/IP**
Operating Systems	**Windows XP/Windows 2000/Windows Me/Windows 98** **Mac OS X v.10.2.1 to 10.3.x**

Wireless LAN

Supported Networks	**IEEE802.11g/IEEE802.11b**
Interface	**IEEE802.11g/IEEE802.11b Network Interface**
Transfer Standard	**IEEE802.11g/IEEE802.11b**
Access Mode	**CSMA/CA**
Transmission Method	**OFDM/DS-SS**
Frequency Bandwidth	**2.412 GHz - 2.462 GHz**
Wireless Channel	**1 to 11**
Network Type	**Infrastructure**
Communication Distance	**Indoors 50 m*** * Effective range differs depending on the installation environment and location.
Security	**Encryption by WPA-PSK (TKIP/AES), WPA2-PSK* (TKIP/AES), or WEP (64/128 bits), access control by IP address and MAC address filtering, passwords** * When changing the encryption method to WPA2-PSK, the settings must be configured by using Canon iP5200R Network Configuration. For details, see “Modifying the Printer Settings from a Web Browser” in the *Network Guide*.
Certification	**Wi-Fi, TELEC, FCC, IC, ETSI, iDA**

Wired LAN

Supported Networks	100BASE-TX/10BASE-T
Interface	Wired LAN Interface (100BASE-TX/10BASE-T)
Compliant Standard	IEEE802.3u (100BASE-TX)/IEEE802.3 (10BASE-T)
Transfer Speed	10 Mbps/100 Mbps (auto switchable)

Camera Direct Print (Canon Bubble Jet Direct)

Interface	Direct Print Port (Connect a iP5200R-compatible digital camera or digital video camcorder using the USB cable supplied with the camera.)
Compatible digital cameras and digital video camcorders	iP5200R-compatible digital cameras and digital video camcorders
Compatible Paper	Card #1 (Photo Paper Pro 4" x 6"/101.6 x 152.4 mm) Card #2 (Photo Paper Plus Glossy, Photo Paper Plus Semi-gloss, or Glossy Photo Paper 4" x 6"/101.6 x 152.4 mm) Card #3 (Photo Paper Plus Glossy 5" x 7"/127.0 x 177.8 mm) LTR (Photo Paper Pro, Photo Paper Plus Glossy, Photo Paper Plus Semi-gloss, or Glossy Photo Paper Letter size) A4 (Photo Paper Pro, Photo Paper Plus Glossy, Photo Paper Plus Semi-gloss, or Glossy Photo Paper A4 size)
Layout Print	Standard: Borderless / with border, Index Print: 6-80 images (depending on the size of print media)
Effect	Exif2.21 compliant
DPOF Functions	Ver. 1.00 compliant (Index print, number of copies, select images, print special characters (date))

Camera Direct Print (PictBridge)

Paper size	**Default (Photo Paper Plus Glossy 10 x 15 cm/4" x 6")** **10 x 15 cm/4" x 6" (Photo Paper Plus Glossy, Photo Paper Pro, Photo Paper Plus Semi-gloss, Glossy Photo Paper, Photo Stickers*1)** **13 x 18 cm/5" x 7" (Photo Paper Plus Glossy)*2** **A4/8.5" x 11" (Photo Paper Plus Glossy A4/Letter, Photo Paper Pro A4/Letter, Photo Paper Plus Semi-gloss A4/Letter, Glossy Photo Paper A4/Letter, Plain Paper A4/Letter)** **5.4 x 8.6 cm/Credit Card (Glossy Photo Paper Card Size)** *1 Canon-brand sticker. Printing on this paper is available only when the Layout function on your camera has a 16-up option. See "**Canon Specialty Media**" on page 19. *2 If using a Canon PictBridge-compatible camera, you can select it.
Paper type	**Default (Photo Paper Plus Glossy), Photo (Photo Paper Plus Glossy, Glossy Photo Paper), Fast Photo (Photo Paper Pro), Plain Paper (Only A4/Letter)**
Layout	**Default (Borderless), Borderless, Bordered, N-up (2, 4, 9, 16)*1, 35-up*2** *1 Layout compatible with Canon-brand sticker above. See "**Canon Specialty Media**" on page 19. *2 Photos are printed in 35 mm Film Style layout (contact printing layout). This option can be selected for Canon PictBridge-compliant devices only. (Note that this option cannot be used for some models.) For a Canon PictBridge-compliant device, selecting the item displayed with the [i] icon prints the shooting information (Exif data) in list format, or in the margins of specified photos. (Note that these options cannot be used for some models.)
Trimming	**Default (Off: No trimming), On (follow camera's setting), Off**
Image optimize	**Default (ExifPrint), On, Off, "VIVID"*, "NR" (Noise Reduction)*, "VIVID+NR"*, "Face"*** * If using a Canon PictBridge-compatible camera, you can select it.
Date/File No. print	**Default (Off: No printing), Date, File No., Both, Off**

Canon IJ Printer Driver System Requirements

Windows

- **A computer on which Windows XP, Windows 2000, Windows Me or Windows 98 operates.**
- **USB 2.0 Hi-Speed interface*1**

  USB 2.0 Hi-Speed operation can only be guaranteed under the environments below.

  OS: Windows XP / Windows 2000

  USB 2.0 Hi-Speed driver: USB 2.0 driver for Windows*2

  USB 2.0 Hi-Speed interface: a PC and a USB cable that comply with USB 2.0 Hi-Speed standard*3

*1 Since the USB 2.0 Hi-Speed interface is fully upwardly compatible with USB Full-Speed (USB 1.1), it can be used at USB Full-Speed (USB 1.1).

*2 Microsoft's authorized drivers are available through Windows Update or Service Pack installation. Any non-Microsoft USB 2.0 drivers are not guaranteed.

*3 All operations are not guaranteed for computers standard-equipped with a USB 2.0 Hi-Speed interface.

- **USB interface**

  USB operation can only be guaranteed on a PC with pre-installed Windows XP, Windows 2000, Windows Me, or Windows 98.
- **CD-ROM drive**
- **Available hard-disk space for printer driver installation**

  Windows XP/Windows 2000: 105 MB
  Windows Me/Windows 98: 20 MB
- **Canon IJ Status Monitor cannot be used under the following conditions:**
  - **When sharing this printer on a network (Windows Me, Windows 98)**

Macintosh

- **A Macintosh series computer equipped with USB interface on which Mac OS X v.10.2.1 to 10.3.x operates.**

  See www.canontechsupport.com for Mac OS update compatibility.
- **USB 2.0 Hi-Speed interface***

  USB 2.0 Hi-Speed operation can only be guaranteed under the environments below.

  OS: Mac OS X v.10.2.7 to 10.3.x

  An internal USB 2.0 Hi-Speed port and a USB cable that comply with the USB 2.0 Hi-Speed standard

  (USB 2.0 Hi-Speed operation on the expansion board is not guaranteed.)

* Since the USB 2.0 Hi-Speed interface is fully upwardly compatible with USB Full-Speed (USB 1.1), it can be used at USB Full-Speed (USB 1.1).

- **USB interface**
- **CD-ROM drive**
- **Available hard-disk space for printer driver installation**

  Mac OS X v.10.2.x to 10.3.x: 105 MB
- **The following functions are not supported:**
  - **Manual Duplex Printing**
  - **Photo Optimizer PRO**
  - **Poster Printing**
  - **Fit-to-Page Printing**
  - **Booklet Printing**
  - **Reverse Order Printing (supported with Mac OS X v.10.3.x)**

Additional System Requirement for On-screen Manuals

Windows

Browser: Windows HTML Help Viewer

Note: Microsoft Internet Explorer 5.0 or later must be installed. The on-screen manual may not be displayed properly depending on your operating system or Internet Explorer version. We recommend that you keep your system up to date with Windows Update.

Macintosh

Browser: Help Viewer

Note: The on-screen manual may not be displayed properly depending on your operating system. We recommend that you keep your system up to date.

⚠ Safety Precautions

Please read the safety warnings and cautions provided in this manual to ensure that you use your printer safely. Do not attempt to use printer in any way not described in this manual.

⚠ Warning You may cause an electric shock, fire or damage the printer if you ignore any of these safety precautions.

Choosing a location	**Do not place the printer close to flammable solvents such as alcohol or thinners.**
Power supply	**Never attempt to plug in or unplug the printer from the power supply when your hands are wet.**
	Always push the plug all the way into the power outlet.
	Never damage, modify, stretch or excessively bend or twist the power cord. Do not place heavy objects on the power cord. 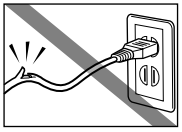
	Never plug the printer into a power socket that is shared with other equipment (extension lead/cord, 2- or 3-way adapter, etc.). 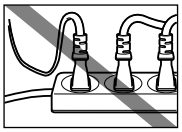
	Never use the printer if the power cord is bundled or knotted.
	If you detect smoke, unusual smells or strange noises around the printer, immediately unplug the printer at the power supply and call for service.
	Periodically, unplug the printer and use a dry cloth to wipe off any dust or dirt collected on the plug and the power outlet. If the printer is placed at a location exposed to a lot of dust, smoke, or high humidity, the dust collected on the plug absorbs moisture and may cause insulation failure and fire. 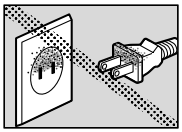
Cleaning the printer	**Use a damp cloth to clean the printer. Never use flammable solvents such as alcohol, benzene or thinners.** If flammable solvents come in contact with electrical components inside the printer, it could cause a fire or electric shock.
	Always unplug the printer from the power outlet before cleaning the printer. If you accidentally switch the printer on while cleaning it, you could injure yourself or damage the printer.
Maintaining the printer	**Do not attempt to disassemble or modify the printer. There are no user serviceable parts inside the printer.** The printer contains high-voltage components. Never attempt any maintenance procedure not described in this guide.
Working around the printer	**Do not use flammable sprays near the printer.** This could cause a fire or electric shock if the spray comes into contact with electrical components inside the printer.

⚠ Caution You may cause injury or damage the printer if you ignore any of these safety precautions.

Choosing a location	**Do not install the printer in a location that is unstable or subject to excessive vibration.**
	Do not install the printer in locations that are very humid or dusty, in direct sunlight, outdoors, or close to a heating source. To avoid the risk of fire or electric shocks, install the printer in a location with an ambient temperature range of 5°C to 35°C (41°F to 95°F) and humidity of 10% to 90% (condensation free).
	Do not place the printer on a thick rug or carpet.
	Do not place the printer with its back attached to the wall.
Power supply	**Ensure that the area around the power outlet is kept clear at all times so you can easily unplug the power cord if necessary.** 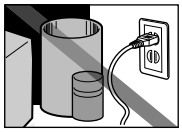
	Never remove the plug by pulling on the cord. 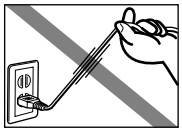
	Do not use an extension lead/ cord. 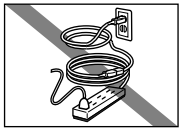
	Never use a power supply source other than the one rated for the printer in the country where you purchased the printer. **AC 110-120 V, 50/60 Hz** **AC 220-240 V, 50/60 Hz**
Working around the printer	**Never put your hands or fingers in the printer while it is printing.**
	Do not place any object on the printer.
	Do not place metal objects (paper clips, staples, etc.) or containers of flammable solvents (alcohol, thinners, etc.) on top of the printer.
	If any foreign object (metal or liquid) fall into the printer, unplug the power cord and call for service.
	Do not transport or store the printer on a slant, vertically or upside-down, as the ink may leak and damage the printer.
Print heads and ink tanks	**For safety reasons store Print Heads and ink tanks out of the reach of small children.** If a child ingests any ink, consult a doctor immediately.
	Do not shake Print Heads or ink tanks. Ink may leak out and stain clothing or the surrounding area.
	Never touch the electrical contacts on a Print Head after printing. The metal parts may be very hot and could cause burns. 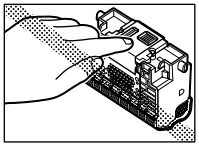
Radio wave interference	**Since the microwave oven and the wireless LAN system use the same frequency bandwidth, the microwave oven can be the potential source of interference when the microwave oven is on.** **Placing this product close to microwave oven may result in the poor status of radio.**

Regulatory Information

Color Printer Model: K10253 (Contains FCC ID: AZDK30254)

This device complies with Part 15 of the FCC Rules and RSS-210 of the IC Rules. Operation is subject to the following two conditions: (1) This device may not cause harmful interference, and (2) this device must accept any interference received, including interference that may cause undesired operation.

Note: This equipment has been tested and found to comply with the limits for a Class B digital device, pursuant to Part 15 of the FCC Rules. These limits are designed to provide reasonable protection against harmful interference in a residential installation. This equipment generates, uses and can radiate radio frequency energy and, if not installed and used in accordance with the instructions, may cause harmful interference to radio communications. However, there is no guarantee that interference will not occur in a particular installation. If this equipment does cause harmful interference to radio or television reception, which can be determined by turning the equipment off and on, the user is encouraged to try to correct the interference by one or more of the following measures:

- Reorient or relocate the receiving antenna.
- Increase the separation between the equipment and receiver.
- Connect the equipment into an outlet on a circuit different from that to which the receiver is connected.
- Consult the dealer or an experienced radio/TV technician for help.

Use of a shielded cable is required to comply with Class B limits in Subpart B of Part 15 of the FCC Rules.

Do not make any changes or modifications to the equipment unless otherwise specified in the manual. If such changes or modifications should be made, you could be required to stop operation of the equipment.

FCC ID: AZDK30254

FCC WARNING

Changes or modifications not expressly approved by the party responsible for compliance could void the user's authority to operate the equipment.

This transmitter must not be co-located or operating in conjunction with any other antenna or transmitter.

FCC Radiation Exposure Statement:

This equipment complies with FCC radiation exposure limits set forth for at uncontrolled equipment. This equipment should be installed and operated with minimum distance at least 20cm between the radiator and persons body (excluding extremities: hands, wrists, feet and legs) and must not be co-located or operated with any other antenna or transmitter.

Canon U.S.A., Inc.
One Canon Plaza
Lake Success, NY 11042
1-516-328-5600

Canadian Radio Interference Regulations

This digital apparatus does not exceed Class B limits for radio noise emissions from a digital apparatus as set out in the interference-causing equipment standard entitled "Digital Apparatus", ICES-003 of the Industry Canada.

Cet appareil numérique respecte les limites de bruits radioéléctriques applicables aux appareils numériques de Classe B prescrites dans la norme sur le matériel brouilleur NMB-003 d'Industrie Canada intitulée ‹‹Appareils numériques››.

CANON U.S.A., INC. LIMITED WARRANTY --- (USA Only)

The limited warranty set forth below is given by Canon U.S.A., Inc. ("Canon USA") with respect to the new or refurbished Canon-brand product ("Product") packaged with this limited warranty, when purchased and used in the United States only.

The Product is warranted against defects in materials and workmanship under normal use and service (a) for a period of one (1) year from the date of original purchase when delivered to you in new condition in its original container or (b) for 90 days from the date of original purchase for refurbished Products. Defective parts or a defective Product returned to a Canon USA repair facility or a Canon USA Authorized Service Facility ("ASF"), and proven to be defective upon inspection, will be repaired, exchanged for new or comparable rebuilt parts, or exchanged for a refurbished Product, as determined by the Canon USA repair facility or the ASF. Warranty repair or replacement shall not extend the original warranty period of the Product. A dated proof of purchase is required at the time of warranty service. A copy of your dated bill of sale will satisfy this requirement. This warranty does not cover any accessories, or any consumables, such as paper or ink cartridges, as to which there shall be no warranty or replacement.

This limited warranty shall only apply if the Product is used in conjunction with compatible computers, peripheral equipment and software. Canon USA shall have no responsibility for such items except for compatible Canon brand peripheral equipment covered by a separate warranty ("Separate Warranty"). Repairs of such Canon brand peripheral equipment shall be governed by the terms of the Separate Warranty. Non-Canon brand equipment and software that may be distributed with the Product are sold "as is" and without warranty of any kind by Canon USA, including any implied warranty regarding merchantability or fitness for a particular purpose, and all such warranties are disclaimed. The sole warranty, if any, with respect to such non-Canon brand items is given by the manufacturer or producer thereof.

This limited warranty covers all defects encountered in normal use of the Product and does not apply in the following cases:

(a) Loss of or damage to the Product due to abuse, neglect, mishandling, improper packaging by you, alteration, accident, electrical current fluctuations, improper use, failure to follow operating or maintenance instructions in, or environmental conditions prescribed in, Canon USA's user's manual or other documentation, or services performed by someone other than a Canon USA repair facility or ASF. Without limiting the foregoing, dropping the Product, scratches, and abrasions will be presumed to have resulted from misuse, abuse or failure to operate the Product as set forth in the user's manual or other documentation for the Product.

(b) Use of parts or supplies (other than those sold by Canon USA) that cause damage to the Product or cause abnormally frequent service calls or service problems.

(c) If the Product has had its serial number or dating defaced, altered or removed.

ANY SYSTEM SOFTWARE (WHETHER FACTORY LOADED ON THE PRODUCT OR CONTAINED ON THE SOFTWARE DISKETTES OR CD-ROMS ENCLOSED WITH, OR ACCOMPANYING, THE PRODUCT), AND ANY UTILITY SOFTWARE, DISTRIBUTED WITH OR FOR THE PRODUCT, IS SOLD "AS IS" AND WITHOUT WARRANTY BY CANON USA. THE SOLE WARRANTY WITH RESPECT TO SUCH SOFTWARE IS CONTAINED IN THE SOFTWARE MANUFACTURER'S LICENSE AGREEMENT DISTRIBUTED THEREWITH, INCLUDING ANY LIMITATIONS AND DISCLAIMERS THEREON. PLEASE CONTACT CANON USA IMMEDIATELY IF YOU HAVE NOT RECEIVED A COPY OF THE SOFTWARE MANUFACTURER'S LICENSE AGREEMENT.

NO IMPLIED WARRANTY, INCLUDING ANY IMPLIED WARRANTY OF MERCHANTABILITY OR FITNESS FOR A PARTICULAR PURPOSE, APPLIES TO THE PRODUCT AFTER THE APPLICABLE PERIOD OF THE EXPRESS LIMITED WARRANTY STATED ABOVE, AND NO OTHER EXPRESS WARRANTY OR GUARANTY, EXCEPT AS MENTIONED ABOVE, GIVEN BY ANY PERSON OR ENTITY WITH RESPECT TO THE PRODUCT SHALL BIND CANON USA, OR ITS ASF. (SOME STATES DO NOT ALLOW LIMITATIONS ON HOW LONG AN IMPLIED WARRANTY LASTS, SO THE ABOVE LIMITATION MAY NOT APPLY TO YOU.) CANON USA SHALL NOT BE LIABLE FOR LOSS OF REVENUES OR PROFITS, INCONVENIENCE, EXPENSE FOR SUBSTITUTE EQUIPMENT OR SERVICE, STORAGE CHARGES, LOSS OR CORRUPTION OF DATA, OR ANY OTHER SPECIAL, INCIDENTAL OR CONSEQUENTIAL DAMAGES CAUSED BY THE USE, MISUSE, OR INABILITY TO USE THE PRODUCT REGARDLESS OF THE LEGAL THEORY ON WHICH THE CLAIM IS BASED, AND EVEN IF CANON USA OR ITS ASF HAS BEEN ADVISED OF THE POSSIBILITY OF SUCH DAMAGES. NOR SHALL RECOVERY OF ANY KIND AGAINST CANON USA OR ITS ASF BE GREATER IN AMOUNT THAN THE PURCHASE PRICE OF THE PRODUCT CAUSING THE ALLEGED DAMAGE. WITHOUT LIMITING THE FOREGOING, YOU ASSUME ALL RISK AND LIABILITY FOR LOSS, DAMAGE OR INJURY TO YOU AND YOUR PROPERTY AND TO OTHERS AND THEIR PROPERTY ARISING OUT OF THE POSSESSION, USE, MISUSE, OR INABILITY TO USE THE PRODUCT SOLD BY CANON USA NOT CAUSED SOLELY AND DIRECTLY BY THE NEGLIGENCE OF CANON USA, OR ITS ASF. (SOME STATES DO NOT ALLOW THE EXCLUSION OR LIMITATION OF INCIDENTAL OR CONSEQUENTIAL DAMAGES, SO THE ABOVE EXCLUSION OR LIMITATION MAY NOT APPLY TO YOU.) THIS LIMITED WARRANTY SHALL NOT EXTEND TO ANYONE OTHER THAN THE ORIGINAL PURCHASER OF THE PRODUCT OR THE PERSON FOR WHOM IT WAS PURCHASED AS A GIFT, AND STATES YOUR EXCLUSIVE REMEDY.

Canon USA offers a range of customer technical support* options:

- Interactive troubleshooting, e-mail technical support, the latest driver downloads and answers to frequently asked questions (www.canontechsupport.com)
- Toll-free live technical support Monday-Saturday (excluding holidays) at **1-800-828-4040**
- Telephone Device for the Deaf (**TDD-1-866-251-3752**)
- Repair or Exchange Service Options:
  In the event service is required for the Product during the limited warranty period, Canon USA offers two hardware support options:

Authorized Service Facility Carry-In / Mail-In Service

Canon USA's Carry-In/Mail-In Service provides repair or exchange, at Canon USA's option, through Canon USA's Authorized Service Facility (ASF) network. The name and telephone number of the ASF(s) near you may be obtained from Canon USA's Web site at: www.canontechsupport.com or by calling the Canon USA Customer Care Center at 1-800-828-4040, or any time while speaking to a technical support person. A Product covered by this limited warranty will be repaired or exchanged, as determined by Canon USA, and returned without charge by the ASF.

InstantExchange Service **

A Canon Customer Care Center or ASF technician will attempt to diagnose the nature of the problem and, if possible, correct it over the telephone. If the problem cannot be corrected over the telephone, and you elect the InstantExchange option, a reference number will be issued to you. You will be asked for the Product serial number and other information pertaining to your defective Product and for a ship-to location for the replacement Product (must include street address).

The Canon USA repair facility will ship out the replacement Product, via 2nd day Air freight service, prepaid by Canon USA. After receipt of the replacement Product (with instructions and a prepaid waybill), follow the enclosed instructions on how to ship the defective Product to the Canon USA repair facility. The defective Product must be returned in the shipping carton in which the replacement Product was packed and include the reference number, A COPY OF YOUR DATED PROOF OF PURCHASE (BILL OF SALE), and a complete explanation of the problem. DO NOT INCLUDE ANY OTHER ITEMS WITH THE DEFECTIVE PRODUCT IN THE RETURN SHIPPING CARTON, AND BE SURE TO RETAIN YOUR PRINTHEAD AND INK CARTRIDGE(S) AND TANK(S).

InstantExchange Service expedites, usually by the second business day, the exchange of a defective Product with a replacement Product, which will normally be shipped the same day if your request for this service is by 3 p.m. E.T. Monday through Friday, except holidays (three (3) business day InstantExchange Service for Alaska and Hawaii). Canon USA does not guarantee expedited shipping service in the event of the occurrence of factors beyond its reasonable control. The replacement Product you receive may be a refurbished or reconditioned unit and will be covered for the balance of the period remaining on your original limited warranty. NOTE THAT BY USING THIS SERVICE YOU WILL KEEP THE REPLACEMENT PRODUCT THAT IS SENT TO YOU. CANON USA WILL RETAIN THE DEFECTIVE PRODUCT THAT YOU ORIGINALLY PURCHASED, WHICH SHALL BECOME THE PROPERTY OF CANON USA. InstantExchange warranty program service is available only during the express limited-warranty period for your Product and only in the continental United States, Alaska and Hawaii during such period.

This limited warranty gives you specific legal rights, and you may also have other rights, which vary from state to state.

* Support program specifics are subject to change without notice.

** InstantExchange warranty service is subject to the availability of refurbished or new replacement units.

Canon U.S.A., Inc.
One Canon Plaza
Lake Success, NY 11042
USA

Canon is a registered trademark of Canon Inc.

©2005 Canon U.S.A., Inc. Canon is a registered trademark of Canon Inc. in the United States and may also be a registered trademark in other countries.

Index

A

Accessing the Printer Driver 35
Advanced Printing 28
ALARM lamp 77
Aligning the Print Head 60
An Error Message Appears on the Screen 79
Automatic Duplex Printing 81

B

Borderless Printing 68

C

Camera Direct Print 89
Camera Error Message 82
Canceling Print Jobs (Windows) 22
Canceling Printing 26
Cannot Connect to PC Properly 66
Cannot Install the Printer Driver 65
Cannot Print Properly from the Digital Camera 82
Canon IJ Printer Utility dialog box (Macintosh) 49
Canon IJ Status Monitor (Windows) 71
CANON U.S.A., INC. LIMITED WARRANTY --- (USA Only).. 95
Cleaning 53, 54
CLI-8BK Black 37
CLI-8C Cyan 37
CLI-8M Magenta 37
CLI-8Y Yellow 37
Cover Guide 8

D

Deep Cleaning 56, 58
Driver
- settings (Macintosh) 24
- settings (Windows) 21

E

Easy-PhotoPrint 36
Easy-WebPrint 36
Examining the Nozzle Check Pattern 50
ExifPrint 36

G

Getting the Ink Level Information 38
Glossy Photo Paper 19

H

Handling Error Messages 77
Help button 2
High Resolution Paper 19

I

Ink tank lamp
- Ink Level Indication on the Printer 38
- Insert the ink tank 44

K

Knowing When to Replace Ink Tanks 40

L

Load Limit Mark 8, 13
Loading Paper 4
Loading Paper in the Auto Sheet Feeder 7
Loading Paper in the Cassette 11

M

Matte Photo Paper 19
Media
- specialty 18
- to avoid 4

Media Type 19, 21, 24

N

Nozzle Check 48, 49
Nozzle Check Pattern
- examining 50
- printing 47

O

Open Button 7
Opening the Printer Properties Dialog Box Directly from the Start Menu (Windows) 35
Opening the Printer Properties Dialog Box from Your Application Program (Windows) 35

P

Page Setup (Macintosh) 24, 71
Page Setup dialog box (Macintosh) 24
Paper Does Not Feed Properly 72
Paper Feed Roller 72
Paper Feed Switch 5
Paper Jams 73, 75, 76
Paper Size 24
Paper Support Load Limit 19
PGI-5BK Black 37
Photo Paper Plus Double Sided 19
Photo Paper Plus Glossy 19
Photo Paper Plus Semi-gloss 19
Photo Paper Pro 19
Photo Stickers 19
PhotoRecord 36

POWER button 2
POWER lamp 2
Print dialog box 21, 24
Print Head Alignment 60, 62
Print Head Cleaning 52
Print Head Deep Cleaning 56
Print Head Holder 42
Print Media to Avoid 4
Print Quality 22, 67
Print Results Not Satisfactory or Contains Errors 67
Printer Driver Setting for Media Type 19
Printer Properties dialog box 21, 35, 47
Printing Photographs Directly from a Canon Bubble Jet Direct Compatible Digital Camera 85
Printing Photographs Directly from a PictBridge Compliant Device 28
Printing the Nozzle Check Pattern 47
Printing with Macintosh 23
Printing with Windows 20

R

Regulatory Information 94
Replacing an Ink Tank 37
RESUME/CANCEL button 22

S

Safety Precautions 92
Specialty Media 19
Specifications 87
Super White Paper 19

T

Transparencies 19
Troubleshooting 64
Troubleshooting Printer Hardware 70
T-Shirt Transfers 19
Turning off the Printer 3
Turning on the Printer 2

U

Uninstalling the printer driver (Windows) 79
USB 2.0 Hi-speed Connection Does Not Work Properly .. 66
Using Specialty Media 18
Using the Auto Sheet Feeder and the Cassette 5
Using the Bundled Software 36

W

Warranty 95
When Printing Becomes Faint or Colors are Incorrect 46

Ordering Information

For additional supplies, use the following descriptions and order numbers.

Description	Order #
Ink Tanks	
PGI-5 Black	0620B002
CLI-8 Black	0628B002
CLI-8 Cyan	0621B002
CLI-8 Magenta	0622B002
CLI-8 Yellow	0623B002
Canon Specialty Papers	
Photo Paper Plus Glossy (4" x 6"/20 sheets)	7980A007
Photo Paper Plus Glossy (4" x 6"/50 sheets)	7980A012
Photo Paper Plus Glossy (4" x 6"/120 sheets)	7980A022
Photo Paper Plus Glossy (5" x 7"/20 sheets)	7980A019
Photo Paper Plus Glossy (8.5" x 11"/20 sheets)	7980A006
Photo Paper Plus Double Sided (5" x 7"/10 sheets)	9981A006
Photo Paper Plus Double Sided (8.5" x 11"/10 sheets)	9981A005
Photo Paper Plus Double Sided Album Kit (5" x 7")	0041B005
Photo Paper Plus Double Sided Album Kit (8.5" x 11")	0041B006
Photo Paper Plus Semi-Gloss (4" x 6"/50 sheets)	8386A010
Photo Paper Pro for Borderless Printing (4" x 6"/20 sheets)	1029A014
Photo Paper Pro for Borderless Printing (4" x 6"/75 sheets)	1029A027
Photo Paper Pro (8.5" x 11"/15 sheets)	1029A004
Photo Paper Pro (8.5" x 11"/30 sheets)	1029A028
Matte Photo Paper (8.5" x 11"/50 sheets)	7981A004
Glossy Photo Paper (4" x 6"/50 sheets)	9157A010
Glossy Photo Paper (8.5" x 11"/20 sheets)	1026A009
Glossy Photo Paper Credit Card Size	9157A023
Photo Stickers	0001C001
Transparencies (8.5" x 11"/50 sheets)	1043A004
High Resolution Paper (8.5" x 11"/100 sheets)	1043A011

Call **1-800-OK-CANON** to locate a dealer near you, or visit the Canon eStore at **www.estore.usa.canon.com**.

© 2005 Canon U.S.A., Inc. Canon is a registered trademark of Canon Inc. in the United States and may be a registered trademark or trademarks in other countries. All other product and brand names are trademarks of their respective owners. As an ENERGY STAR® partner, Canon U.S.A., Inc. has determined that this product meets the ENERGY STAR® guidelines for energy efficiency.

Quick Start Guide

Canon U.S.A., Inc.
One Canon Plaza, Lake Success, NY 11042, U.S.A.

Canon Inc.
30-2, Shimomaruko 3-chome, Ohta-ku, Tokyo 146-8501, Japan

Canon Canada, Inc.
6390 Dixie Road, Mississauga, Ontario, L5T 1P7, Canada

Canon Latin America, Inc.
703 Waterford Way, Suite 400, Miami, FL 33126, U.S.A.

Canon Mexicana S. de R.L. de C.V.
Periferico Sur No. 4124 Col. Ex-Rancho de Anzaldo, C.P. 01900, Mexico, D.F.

The following ink tanks are compatible with this printer.
For details on ink tank replacement, refer to “Replacing an Ink Tank” in this guide.

QA7-3631-V01 XXXXXXXX ©CANON INC.2005 PRINTED IN THAILAND