Canon

imageCLASS MF5750

Set-Up Instructions

READ THIS FIRST

Thank you for purchasing Canon imageCLASS MF5750.
To get your machine ready for use, please follow the instructions in this document before referring to any other documentation.

1 Unpack the machine and its components.

Check that you have the following:

- **Machine**
- **Power cord**
- **USB cable**
- **Telephone line cord**
- **Destination labels**
- **Set-Up Instructions**

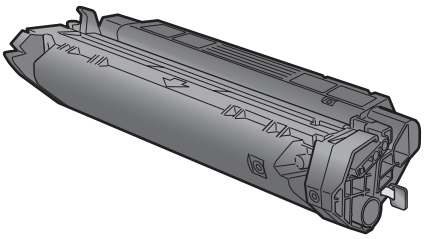

- **Cartridge**

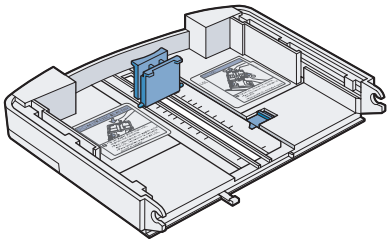

- **Cassette extension**

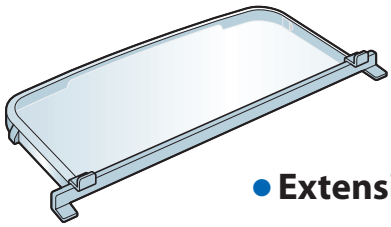

- **Extension cover**

- **Basic Guide**
- **Facsimile Guide**
- **Warranty**
- **Limited Warranty Note for Cartridge X25**
- **Registration Card**
- **MF5700 Series User Software CD-ROM**

NOTE

- The cartridge included with the machine is Cartridge X25 that yields approximately 2,500 pages of printouts (Letter at 4% dot coverage).

Before setting up the machine:

1 Place the machine on a flat, stable surface.
2 Remove **all** shipping tape from the **exterior** of the machine.

Referring to the following figure, remove the tape and spacers on both sides of the cassette housed in the machine.

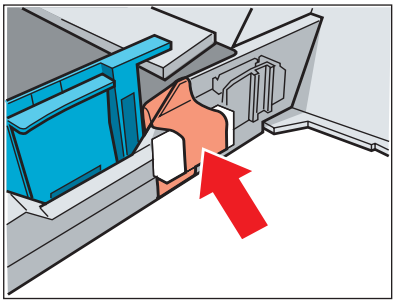

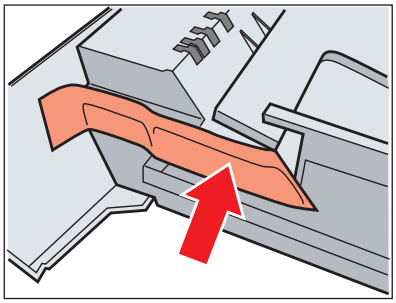

2 Install the cartridge.

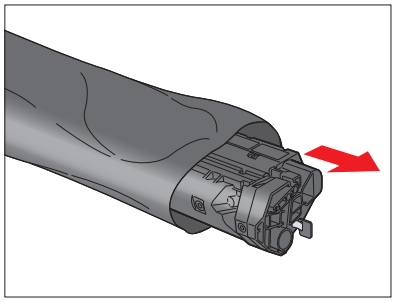

1 Remove the cartridge from the bag. Keep the bag in a safe place for future use.

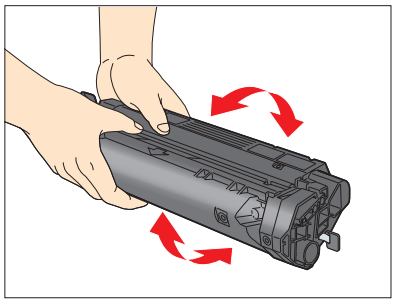

2 Gently rock the cartridge several times to evenly distribute the toner inside.

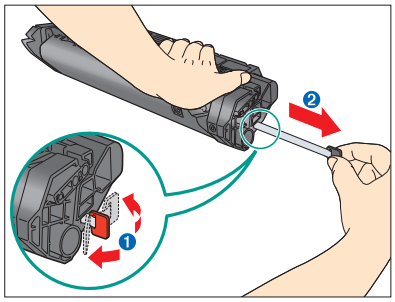

3 Hold the cartridge on a flat stable surface with one hand, and break the tab ❶ and pull out the seal ❷ completely with the other hand.

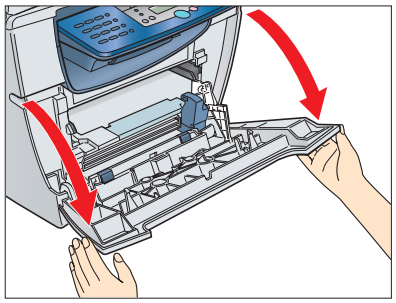

4 Pull open the front cover.

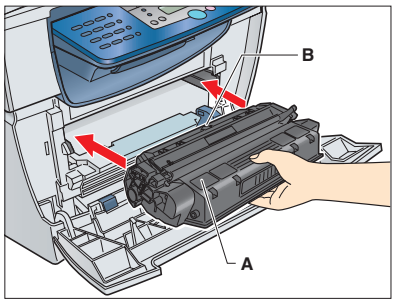

5 Hold the cartridge so that the instructions (**A**) and the arrow (**B**) are facing up, and insert it in the machine horizontally as far as it will go.

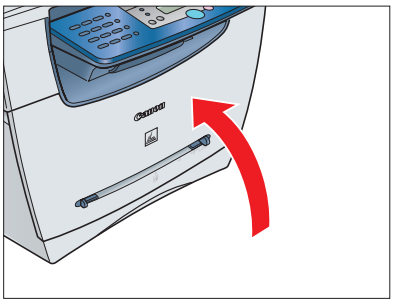

6 Close the front cover of the machine.

3 Assemble the cassette and load paper.

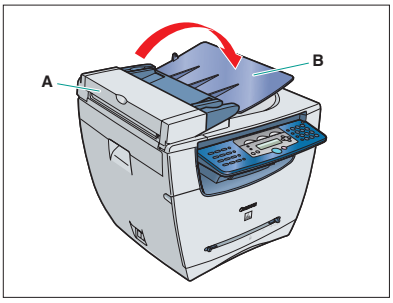

1 Hold the document feeder (**A**) with one hand, and open the document feeder tray (**B**) with the other.

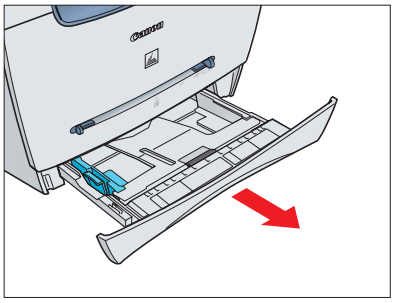

2 Pull out the paper cassette completely.

NOTE

- Pull the cassette straight/forward. Pulling it at an angle may damage the paper sensing lever inside the machine.

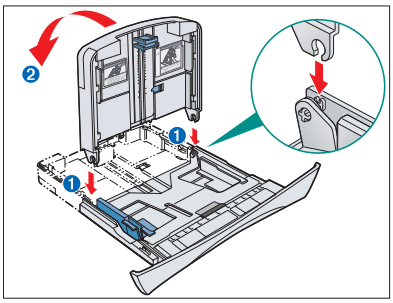

3 Attach the extension to the cassette. The slots ❶ are keyed and must be inserted at a 90° angle. Once inserted, fold the extension as shown ❷.

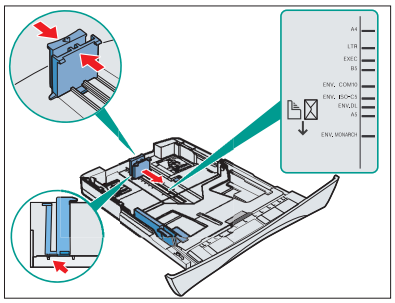

4 Pinch and slide the rear paper end guide to match the size of paper.

NOTE

- Confirm that the paper guide is fitted in the paper size slit correctly.

To load Legal-size paper:

Pull the blue tab ❶ and extend the cassette ❷ as far as it will go. Keep the rear paper end guide to **LTR** size mark. If you are not using Legal-size paper, skip to the next step without extending the cassette.

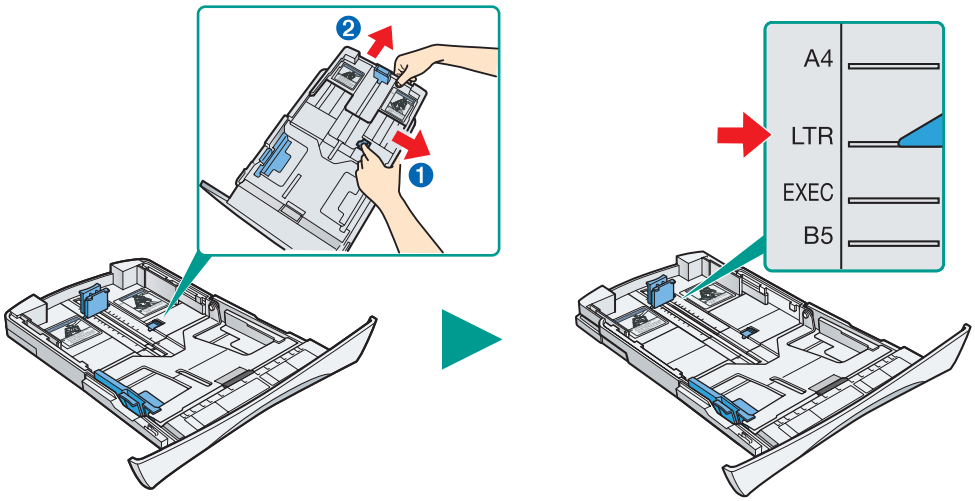

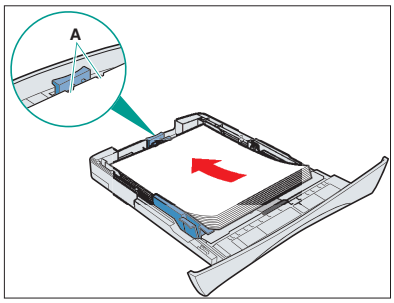

5 Load the paper into the cassette. Make sure the paper stack sits below the hooks (**A**).

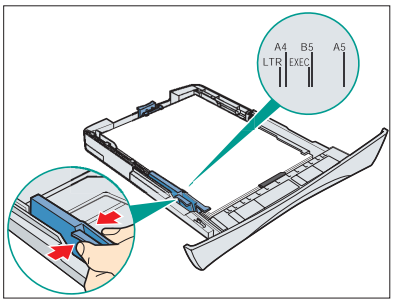

6 Pinch and slide the side paper end guides to match the size of paper.

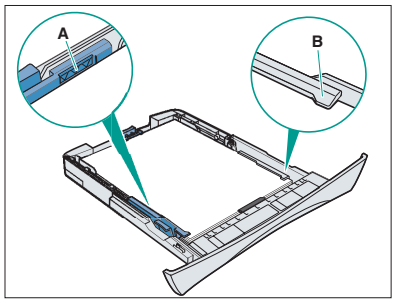

7 Even out the edges of the paper stack. Make sure the height of the stack does not exceed the limit marks (**A**) and that the side edges of the stack are below the hooks (**B**).

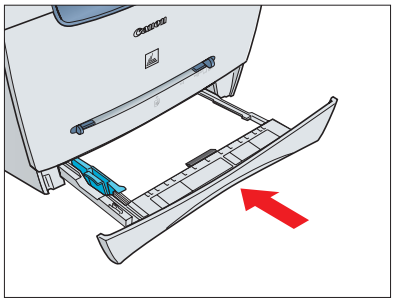

8 Insert the paper cassette back into the machine as far as it will go.

NOTE

- If you do not completely insert the cassette into the machine, paper jams may occur.

IMPORTANT

- **Do not push in the cassette at an angle. Doing so may damage the paper sensing lever inside the machine.**

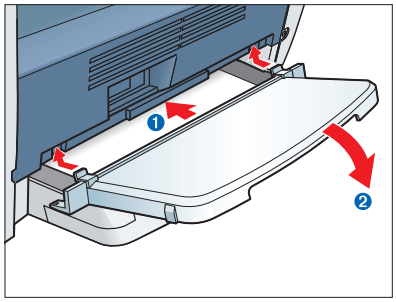

9 Insert the tabs on the extension cover into the slots ❶ on the back of the machine, and carefully lower the cover ❷ until it sits on the cassette extension beneath it.

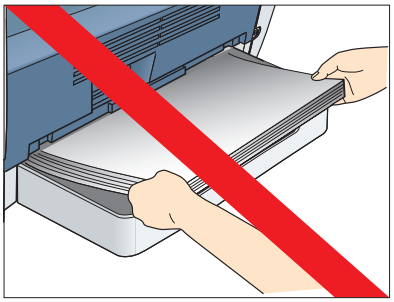

IMPORTANT

- **Do not load paper from the back of the machine. Doing so may damage the paper feeding assembly inside the machine.**

4 Connect the telephone cable and any necessary external device.

Connect the telephone cable to the wall jack.

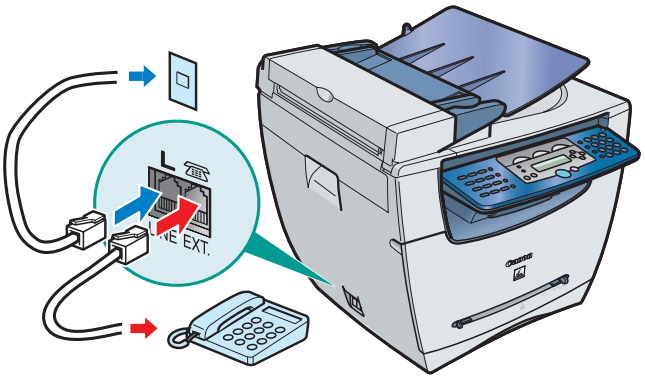

You can connect an external device if necessary (optional).

Connect external devices as follows:

L = Telephone line jack
☎ = External device jack

- **Telephone or answering machine**

- **Telephone and answering machine**

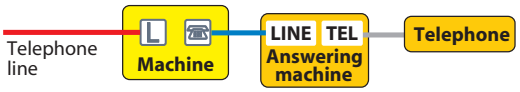

- **Built-in computer modem and telephone**

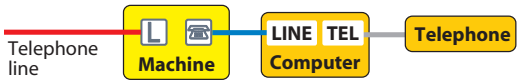

5 Connect the power cord.

1 Plug the power cord into the rear socket ❶. Then connect the other end to the wall outlet ❷.

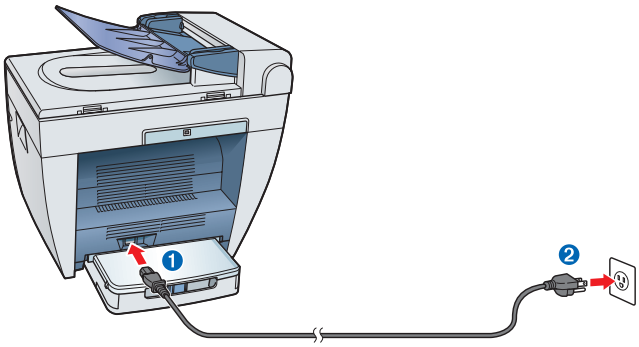

2 Once it is warmed up, the standby display appears in the LCD.

IMPORTANT

- **For important safety instructions on installation and handling of the machine, see "Important Safety Instructions" in the *Basic Guide*.**

NOTE

- Make sure the correct paper size is specified in the machine. For details, see Chapter 2, "Paper Handling," in the *Basic Guide*.

6 Set the receive mode

1 Press [Menu]❶.

2 Press [◀ (–)] or [▶ (+)]❷ to select <**FAX SETTINGS**> → press [Set]❸.

3 Press [◀ (–)] or [▶ (+)]❷ to select <**RECEIVE MODE**> → press [Set]❸.

4 Press [◀ (–)] or [▶ (+)]❷ to select the receive mode → press [Set]❸.

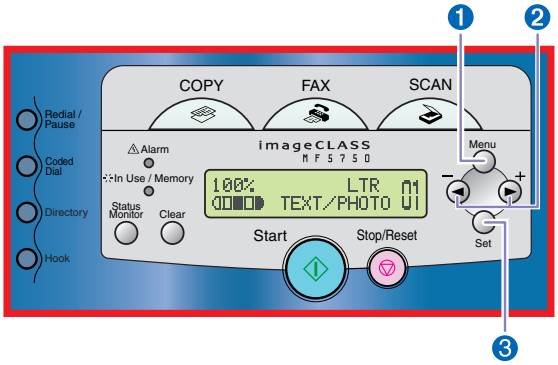

You can select from the following:

- <**FaxOnly**> to automatically receive faxes, all calls will be answered as fax transmission. Voice calls will then be disconnected.
- <**FaxTel**> to automatically switch between fax and voice calls. Faxes will be received automatically, and the machine will ring for voice calls.
- <**AnsMode**> to receive faxes automatically and route voice calls to an answering machine connected to the machine.
- <**DRPD**> to distinguish between fax and voice calls by using Distinctive Ring Pattern Detection.
- <**Manual**> for the connected telephone to ring for fax and voice calls. Fax calls must be answered manually.

5 Press [Stop/Reset] to return to the standby display.

NOTE

- For details on setting fax receive mode, see Chapter 5, "Receiving Faxes," in the *Facsimile Guide*.
- Before using the machine, make sure you have set the correct telephone line type for your telephone line. For details on setting fax receive mode, see Chapter 2, "Registering Information in Your Machine," in the *Facsimile Guide*.

7 Install the software.

IMPORTANT

- **Do not connect the USB cable before installing the software. If you connect the USB cable before installing the software and the Found New Hardware Wizard screen appears, click [Cancel] and disconnect the USB cable.**
- **Network Connection is not available for this model. If you selected [Network Connection] by mistake, go back to the previous screen by clicking [Back], and select [USB Connection].**

NOTE

- The instructions below are for Windows XP/Server 2003. For Windows 98/Me/2000, see the *Software Guide* (included in the User Software CD).
- For Windows 2000/XP/Server 2003, log on as Administrator to install the software.

1 Turn on your computer.

2 Quit any open applications, including aniti-virus software.

3 Insert the User Software CD into the CD-ROM drive.

4 When the MF Setup screen appears, click [USB Connection].

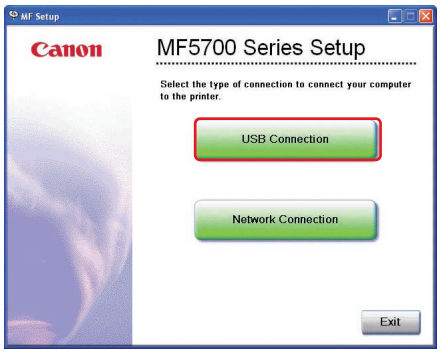

NOTE

- If the MF Setup screen is not displayed, on the Windows desktop, click [start] → [My Computer]. Open the CD-ROM icon, then double-click [Setup (Setup.exe)].

5 Click [Install Drivers].

NOTE

- If you would like to install the Presto! PageManager file management software and/or OmniPage SE OCR software, click [Install Applications] and follow the instructions on the screen.
- You can also click [Read Manuals] on this screen to read PDF manuals.

6 Click [Install MF Drivers].

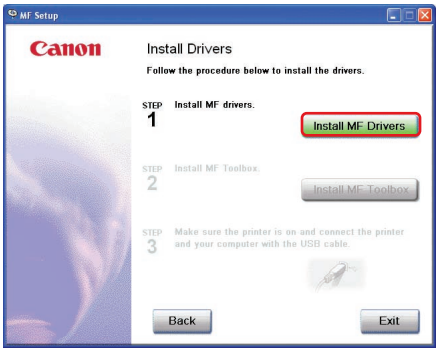

7 When the MF Drivers-Setup Wizard screen appears, click [Yes] and follow the instructions on the screen.

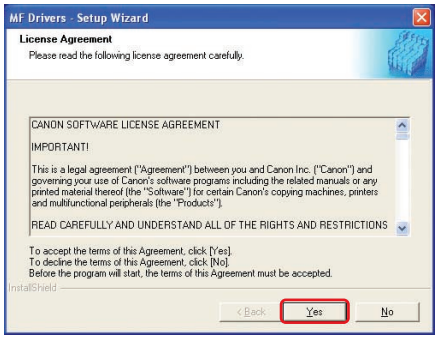

8 When the installation is complete, click [Exit] to close the MF Drivers-Setup Wizard screen.

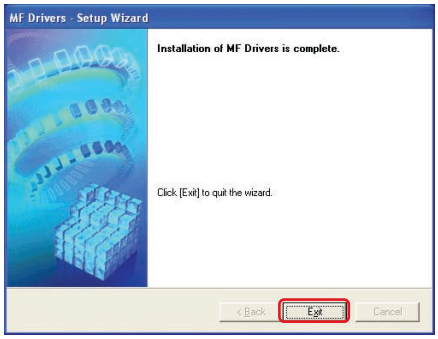

9 On the MF Setup screen, click [Install MF Toolbox].

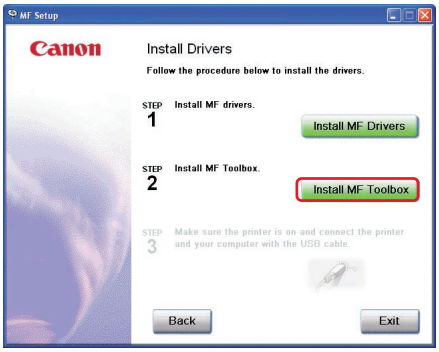

10 When the MF Toolbox-Setup Wizard screen appears, click [Next] and follow the instructions on the screen.

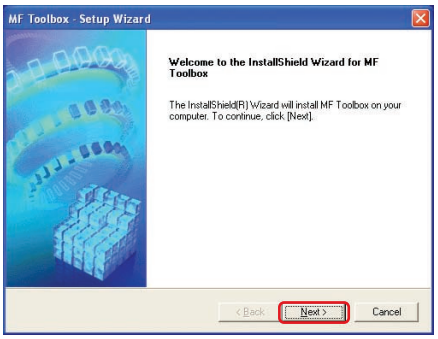

NOTE

- Before installing MF Toolbox, make sure that all other applications are closed and that any anti-virus software on your computer is disabled.

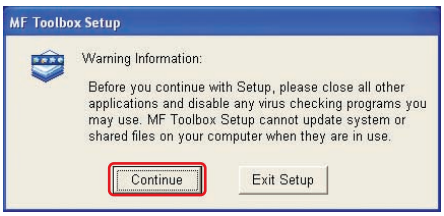

11 When the installation is complete, click [Exit] to close the MF Toolbox-Setup Wizard screen.

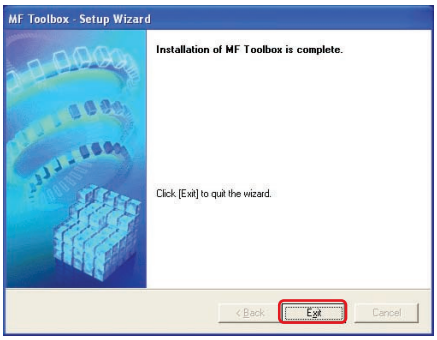

8 Connect the machine to your computer.

1 Make sure the machine's power is turned on. Connect the cable to the USB port on the back of the machine. Then connect the other end of the cable to the USB port on your computer.

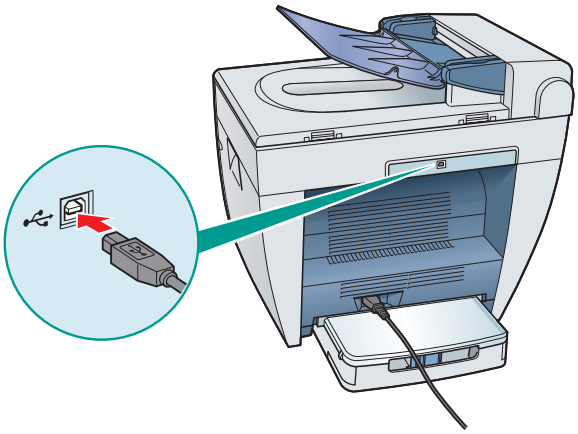

2 After the installation is complete, click [Exit] to close the MF Setup screen. Remove the User Software CD from the CD-ROM drive and store it in a safe place.

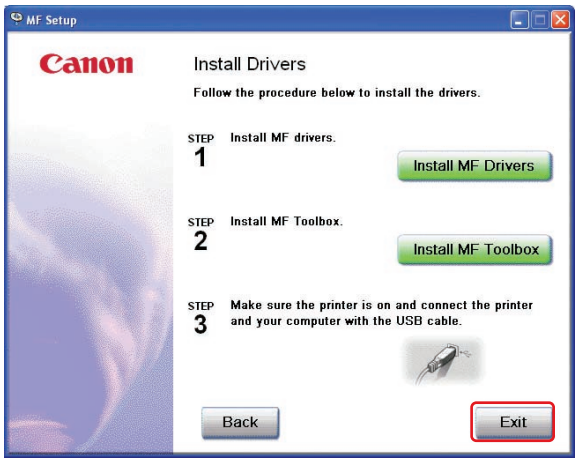

NOTE

- If you would like to install the optional Presto! PageManager file management software and/or OmniPage OCR software, click [Install Applications] and follow the instructions on the screen.
- You can also click [Read Manuals] to read PDF manuals in the User Software CD. To view the manuals in PDF format, Adobe Reader/Acrobat Reader/Acrobat is required. If Adobe Reader/Acrobat Reader/Acrobat is not installed on your system, please download it from the Adobe Systems Incorporated website (http://www.adobe.com).

9 Congratulations! You have now completed the machine setup.

Where to go from here...

Once you have completed all steps in this document, see the *Basic Guide* for basic operations of all functions of your machine.

For information on the driver software, see the *Software Guide* (included in the User Software CD).

NOTE

- Remember to register your machine to ensure product support. The serial number is located on the back of the machine.

For installation help and operational instructions, call us at:

1-800-828-4040 U.S.A. CUSTOMERS

1-800 OK CANON CANADA CUSTOMERS

Part no. FA7-6518 (010)
©2005 Canon Inc.
Canon and imageCLASS are trademarks of Canon Inc.
All other products and brand names are registered trademarks or trademarks of their respective owners.
Specifications subject to change without notice.
PRINTED IN CHINA