Canon

imageCLASS
MF6500
Series

Basic Guide

What Can I Do with This Machine?
Before Using the Machine
Document Handling
Print Media
Sending Faxes (MF6550/MF6560/MF6580 Only)
Receiving Faxes (MF6550/MF6560/MF6580 Only)
Copying
Printing
Scanning
PC Faxing (MF6550/MF6560/MF6580 Only)
Remote UI (MF6580 Only)
Maintenance
Troubleshooting
Machine Settings
Appendix

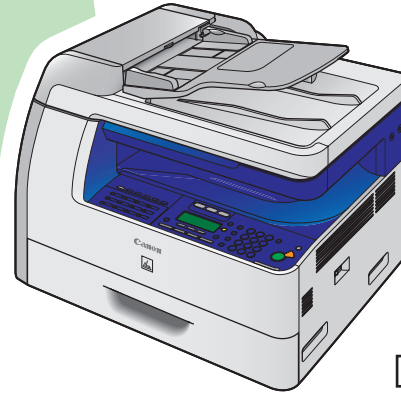

Please read this guide before operating this equipment.
After you finish reading this guide, store it in a safe place for future reference.

ENG

Manuals for the Machine

- **Machine Set-Up**
- **Software Installation**

Starter Guide

- **Basic Features**
- **Maintenance**
- **Machine Settings**
- **Specifications**

Basic Guide (This Document)

- **Advanced Features**
- **Network and Remote User Interface**
- **System Monitor**
- **Reports and Lists**

Advanced Guide CD-ROM

- **Scanning Features**

Scanner Driver Guide CD-ROM

CD-ROM **Indicates the manual is supplied in PDF format in the accompanying CD-ROM.**

- To view the manuals in PDF format, Adobe Reader/Acrobat Reader/Acrobat is required. If Adobe Reader/Acrobat Reader/Acrobat is not installed on your system, please download it from the Adobe Systems Incorporated website (http://www.adobe.com).
- Considerable effort has been made to make sure that the manuals for the machine are free of inaccuracies and omissions. However, as we are constantly improving our products if you need an exact specification, please contact Canon.
- The machine illustration on the cover may differ slightly from your machine.

What Can I Do with This Machine?

Fax Features (MF6550/MF6560/MF6580 Only)

Specify a recipient with a single key

One-Touch Speed Dialing

→ p. 4-7

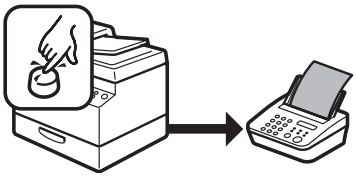

Specify a recipient with a two-digit code

Coded Speed Dialing

→ p. 4-15

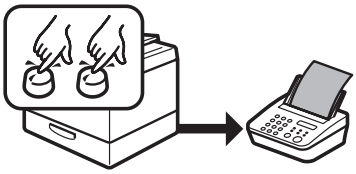

Specify multiple recipients with a single key

Group Dialing

→ p. 4-23

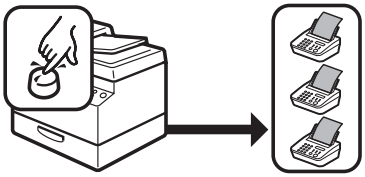

Look up a particular recipient

Address Book Dialing

→ Advanced Guide

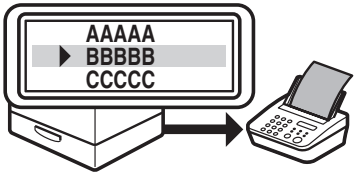

Redial when the line is busy

Automatic Redialing

→ Advanced Guide

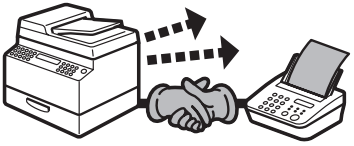

Send a fax to multiple recipients

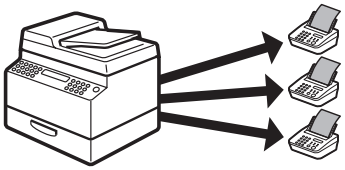

Broadcasting

→ Advanced Guide

Send a fax at a specified time

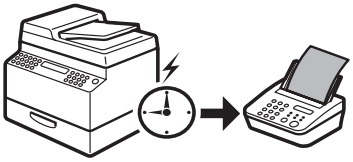

Delayed Sending

→ Advanced Guide

Receive faxes in memory without printing out

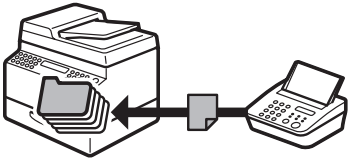

Memory Reception

→ Advanced Guide

Copy Features

Select a scan mode depending on the type of image

Image Quality

→ p. 6-3

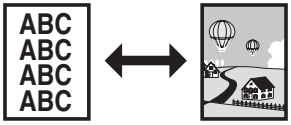

Adjust the density level of scanned images

Density

→ p. 6-4

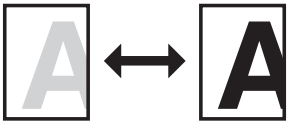

Enlarge or reduce copied images

Zoom Ratio

→ p. 6-6

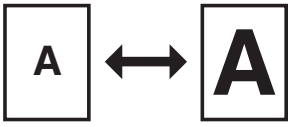

Sort copies by page order

Collate Copying

→ Advanced Guide

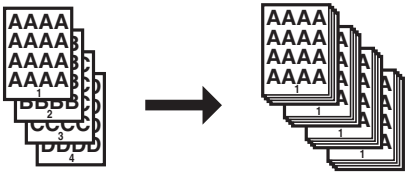

Make two-sided copies

Two-Sided Copy

→ Advanced Guide

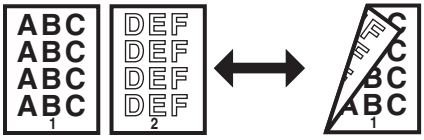

Copy two documents on one sheet

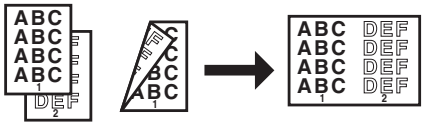

2 on 1 Combination

→ Advanced Guide

Printer Feature

Print a document from a PC

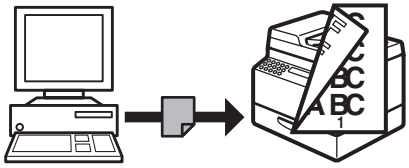

Printing

→ Online help

Scanner Feature

Specify detailed scanning options to suit various images

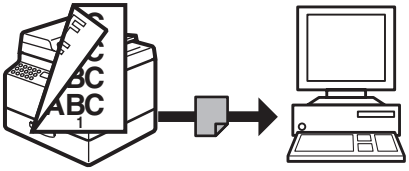

Scanning

→ Scanner Driver Guide

PC Fax Feature (MF6550/MF6560/MF6580 Only)

Send a fax from a PC

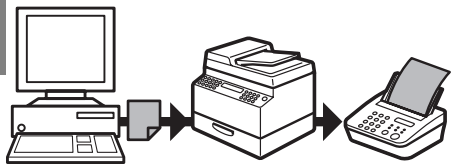

PC Faxing

→ Online help

Remote UI Feature (MF6580 Only)

Access and manage the machine from a PC

Remote UI

→ Advanced Guide

Contents

Manuals for the Machine i

What Can I Do with This Machine? ii

Fax Features (MF6550/MF6560/MF6580 Only) ii
Copy Features iv
Printer Feature vi
Scanner Feature vi
PC Fax Feature (MF6550/MF6560/MF6580 Only) vii
Remote UI Feature (MF6580 Only) vii

Contents viii

Preface xiii

Important Safety Instructions xiii
Handling and Maintenance xiii
Location xiv
Power Supply xv
Customer Support (U.S.A) xvi
Customer Support (Canada) xvi

How to Use This Guide xvii

Symbols Used in This Manual xvii
Illustrations Used in This Manual xviii

Legal Notices xix

Copyright xix
Disclaimer xix
Legal Limitations on the Usage of Your Product and the Use of Images xx
Trademarks xxi

Users in the U.S.A. xxii

Pre-Installation Requirements for Canon Facsimile Equipment xxii
Connection of the Equipment xxiii
In Case of Equipment Malfunction xxiii
Rights of the Telephone Company xxiii
FCC Notice xxiv

Users in Canada ..... **xxvi**

Pre-Installation Requirements for Canon Facsimile Equipment xxvi
Notice xxvii

Laser Safety ..... **xxix**

CDRH Regulations xxix

1 Before Using the Machine 1-1

Machine Components **1-1**

Operation Panel **1-3**

Main Operation Panel 1-3
Facsimile Operation Panel (MF6550/MF6560/MF6580 Only) 1-5

LCD (Standby Mode) **1-6**

Copy Mode 1-6
Fax Mode 1-6
Scan Mode 1-6

Toner Cartridge **1-7**

Maintaining the Toner Cartridge 1-7

Timer Settings **1-9**

Setting Sleep Mode 1-9
Setting Auto Clear Time 1-12
Setting Daylight Saving Time 1-14

2 Document Handling 2-1

Document Requirements **2-1**

Scanning Area **2-3**

Loading Documents **2-4**

On the Platen Glass 2-4
In the ADF 2-6

3 Print Media 3-1

Paper Requirements 3-1

Printable Area 3-3

Paper Guidelines 3-4

Loading Paper 3-5

In the Multi-Purpose Tray (e.g., Envelopes) 3-5

Setting Paper Type and Size 3-8

For the Paper Cassette 3-8
For the Multi-Purpose Tray 3-11

4 Sending Faxes (MF6550/MF6560/MF6580 Only) 4-1

Scan Settings 4-3

Image Quality 4-3
Density 4-5

Speed Dialing 4-6

Registering Recipients for Speed Dialing 4-6
Using Speed Dialing 4-32

Manual Sending 4-34

Direct Sending 4-36

5 Receiving Faxes (MF6550/MF6560/MF6580 Only) 5-1

6 Copying 6-1

Scan Settings 6-3

Image Quality 6-3
Density 6-4
Zoom Ratio 6-6

7 Printing 7-1

8 Scanning 8-1

9 PC Faxing (MF6550/MF6560/MF6580 Only) 9-1

10 Remote UI (MF6580 Only) 10-1

11 Maintenance 11-1

Cleaning the Machine 11-1

Exterior 11-1
Interior 11-2
Fuser Roller 11-4
Scanning area 11-5
Cleaning the ADF Automatically 11-8
Transcription Roller 11-9

Replacing the Toner Cartridge 11-10

Redistributing Toner 11-10
Replacing the Toner Cartridge 11-12

Recycling Used Cartridges 11-16

The Clean Earth Campaign 11-16
U.S.A. PROGRAM 11-17
CANADA PROGRAM-CANADA PROGRAMME 11-20

Transporting the Machine 11-22

12 Troubleshooting 12-1

Clearing Jams 12-1

Document Jams 12-1
Paper Jams 12-3

LCD Messages 12-6

Error Codes (MF6550/MF6560/MF6580 Only) 12-12

If a Power Failure Occurs 12-14

If You Cannot Solve a Problem 12-15

13 Machine Settings 13-1

Machine Settings 13-1

Printing USER'S DATA LIST 13-1
Accessing the Setting Menu 13-3

Setting Menu 13-5

COMMON SETTINGS 13-5
COPY SETTINGS 13-10
FAX SETTINGS
(MF6550/MF6560/MF6580 Only) 13-12
ADDRESS BOOK SET.
(MF6550/MF6560/MF6580 Only) 13-18
PRINTER SETTINGS 13-20
TIMER SETTINGS 13-24
ADJUST./CLEANING 13-26
REPORT SETTINGS 13-28
SYSTEM SETTINGS 13-30

14 Appendix 14-1

Specifications 14-1

General 14-1
Copier 14-2
Printer 14-3
Facsimile (MF6550/MF6560/MF6580 Only) 14-3
Telephone (MF6550/MF6560/MF6580 Only) 14-5

Index 14-6

Preface

Thank you for choosing a Canon product. Before using the machine, please read the following instructions for your safety.

Important Safety Instructions

WARNING

Except as specifically described in this guide, do not attempt to service the machine yourself. Never attempt to disassemble the machine: opening and removing its interior covers will expose you to dangerous voltages and other risks. For all service, contact Canon Customer Care Center, or a Canon Authorized Service Facility.

Handling and Maintenance

- Follow all warnings and instructions marked on the machine.
- Do not subject the machine to strong physical shocks or vibrations.
- Always unplug the machine before moving or cleaning it.
- To avoid paper jams, never unplug the power cord, open the left cover, or add or remove paper in the machine while printing.
- When transporting the machine, be sure to remove the toner cartridge from the machine.
- Place the toner cartridge in its original protective bag or wrap it in a thick cloth to prevent exposure to light.
- Always grip the handle on the sides of the machine when you lift the machine. Never lift the machine by any of its trays or attachments.
- Do not insert any objects into the slots or openings on the machine since they may touch dangerous voltage points or short out parts. This could result in fire or electric shock.
- Do not allow small objects (such as pins, paper clips, or staples) to fall into the machine.
- To avoid spillage in or around the machine, do not eat or drink near it.
- Keep the machine clean. Dust accumulation can prevent the machine from operating properly.

- Unplug the machine from the wall outlet and contact Canon Customer Care Center in any of the following cases:
  - When the power cord or plug is damaged or frayed.
  - If liquid or small object has fallen into the machine.
  - If the machine has been exposed to rain or water.
  - If the machine does not operate normally when you have followed the instructions in this guide. Adjust only those controls that are covered by the instructions in this guide. Improper adjustment of other controls may result in damage and may require extensive work by a qualified technician to restore the product to normal operation.
  - If the machine has been dropped.
  - If the machine exhibits a distinct change in performance, indicating a need for servicing.

Location

- Place the machine on a flat, stable, vibration-free surface that is strong enough to support its weight.
- Place the machine in a cool, dry, clean, well ventilated place.
- Make sure the area is free from dust.
- Make sure the location is not exposed to high temperature or humidity.
- Keep the machine away from direct sunlight as this can damage it. If you have to place the machine near a window, install heavy curtains or blinds.
- Do not use the machine near water. Make sure that no wet or humid objects come into contact with the machine.
- Do not use or store the machine outdoors.
- Do not place the machine near devices that contain magnets or generate magnetic fields, such as speakers.
- If possible, place the machine near an existing telephone line outlet for easy connection of the telephone line cord, and to avoid the expense of installing a new outlet.
- Place the machine near a standard 120 V AC (60 Hz) power outlet.

– To ensure reliable operation of the machine and to protect it from overheating (which can cause it to operate abnormally and create a fire risk), do not block the exhaust vent. Never block or cover any openings on the machine by placing it on a bed, sofa, rug, or other similar surface. Do not place the machine in a cupboard or built-in installation, or near a radiator or other heat source unless proper ventilation is provided. Leave enough space around all sides of the machine.
– Do not stack boxes or furniture around the power outlet. Keep the area free so you can reach the outlet quickly. If you notice anything unusual (smoke, strange odors, noises) around the machine, unplug the power cord immediately. Contact Canon Customer Care Center.
– Do not allow anything to rest on the power cord, and do not place the machine where the cord will be walked on. Make sure the cord is not knotted or kinked.

Power Supply

– During electrical storms, unplug the power cord from the power outlet.
(Please note that any documents stored in the machine's memory will be deleted when you unplug the power cord.)
– Whenever you unplug the power cord, wait at least five seconds before you plug it in again.
– Do not plug the power cord into an uninterruptible power supply (UPS).

WARNING

This product emits low level magnetic flux. If you use a cardiac pacemaker and feel abnormalities, please move away from this product and consult your doctor.

Customer Support (U.S.A)

Your machine is designed with the latest technology to provide trouble-free operation. If you encounter a problem with the machine's operation, try to solve it by using the information in Chapter 12. If you cannot solve the problem or if you think your machine needs servicing, contact Canon Customer Care Center at 1-800-828-4040 between the hours of 8:00 A.M. to 8:00 P.M. EST Monday through Friday and 10:00 A.M. to 8:00 P.M. on Saturday. 24 hour online support is also available at the website http://www.canontechsupport.com/

Customer Support (Canada)

Canon Canada Inc., offers a full range of customer technical support options*:

– For step-by-step troubleshooting, e-mail technical support, the latest driver or document downloads, and answers to frequently asked questions visit http://www.canon.ca/
– Automated step-by-step telephone support on most current products 24 hours, 7 days a week 1-800-652-2666
– Free live technical support 9 A.M. to 8 P.M. EST Monday through Friday (excluding holidays) for products still under warranty 1-800-652-2666
– The location of the authorized service facility nearest you visit http://www.canon.ca/ or 1-800-652-2666
– If the problem cannot be corrected by using one of the above technical support options, repair options are available at the time of your call to the live technical support number above or via the website at http://www.canon.ca/

* Support program specifics are subject to change without notice.

How to Use This Guide

Symbols Used in This Manual

The following symbols are used throughout the manuals for the machine and indicate the warnings, cautions and notes you should keep in mind when using the machine.

WARNING	Indicates a warning that may lead to death or serious injury if not observed.
CAUTION	Explains how to avoid actions that could injure you or damage your machine.
NOTE	Explains operating restrictions and how to avoid minor difficulties.

In addition, this guide uses distinctive notations to identify keys and information in the LCD:

– The keys you press appear in square brackets: [Stop].

– Information in the LCD appears in angle brackets: <DOCUMENT READY>.

The numbers that point to the keys on the operation panel diagram correspond to the order of steps to take in the procedure.

Illustrations Used in This Manual

Unless otherwise mentioned, illustrations used in this manual are those taken when no optional equipment is attached to the imageCLASS MF6550.

The model imageCLASS MF6550 is used for illustration purposes in this manual. When there is any difference among MF6530, MF6531, MF6550, MF6560, MF6580, it is clearly indicated in the text, e.g., “MF6580 Only.”

Legal Notices

Copyright

Copyright © 2006 by Canon Inc. All rights reserved. No part of this publication may be reproduced, transmitted, transcribed, stored in a retrieval system, or translated into any language or computer language in any form or by any means, electronic, mechanical, magnetic, optical, chemical, manual, or otherwise, without the prior written permission of Canon Inc.

Disclaimer

The information in this document is subject to change without notice.
CANON INC. MAKES NO WARRANTY OF ANY KIND WITH REGARD TO THIS MATERIAL, EITHER EXPRESS OR IMPLIED, EXCEPT AS PROVIDED HEREIN, INCLUDING WITHOUT LIMITATION, THEREOF, WARRANTIES AS TO MARKETABILITY, MERCHANTABILITY, FITNESS FOR A PARTICULAR PURPOSE OF USE OR AGAINST INFRINGEMENT OF ANY PATENT. CANON INC. SHALL NOT BE LIABLE FOR ANY DIRECT, INCIDENTAL, OR CONSEQUENTIAL DAMAGES OF ANY NATURE, OR LOSSES OR EXPENSES RESULTING FROM THE USE OF THIS MATERIAL.

Legal Limitations on the Usage of Your Product and the Use of Images

Using your product to scan, print or otherwise reproduce certain documents, and the use of such images as scanned, printed or otherwise reproduced by your product, may be prohibited by law and may result in criminal and/or civil liability.
A non-exhaustive list of these documents is set forth below. This list is intended to be a guide only. If you are uncertain about the legality of using your product to scan, print or otherwise reproduce any particular document, and/or of the use of the images scanned, printed or otherwise reproduced, you should consult in advance with your legal advisor for guidance.

- Paper Money
- Money Orders
- Certificates of Deposit
- Postage Stamps (canceled or uncanceled)
- Identifying Badges or Insignias
- Selective Service or Draft Papers
- Checks or Drafts Issued by Governmental Agencies
- Motor Vehicle Licenses and Certificates of Title
- Travelers Checks
- Food Stamps
- Passports
- Immigration Papers
- Internal Revenue Stamps (canceled or uncanceled)
- Bonds or Other Certificates of Indebtedness
- Stock Certificates
- Copyrighted Works/Works of Art without Permission of Copyright Owner

Trademarks

Canon, the Canon logo and imageCLASS are trademarks of Canon Inc.
All other product and brand names are registered trademarks, trademarks or service marks of their respective owners.

As an ENERGY STAR® Partner, Canon has determined that this product meets the ENERGY STAR® guidelines for energy efficiency. The International ENERGY STAR® Office Equipment Program is an international program that promotes energy saving through the use of computers and other office equipment. The program backs the development and dissemination of products with functions that effectively reduce energy consumption. It is an open system in which business proprietors can participate voluntarily. The targeted products are office equipment, such as computers, displays, printers, facsimiles, and copiers. Their standards and logos are uniform among participating nations.

Users in the U.S.A.

Pre-Installation Requirements for Canon Facsimile Equipment

A. Location

Supply a suitable table, cabinet, or desk. See p. 14-1 for the machine's weight and dimensions.

B. Order Information

1. Only a single line, touch-tone or rotary telephone set is to be used.
2. Order an RJ11-C modular jack (USOC code), which should be installed by the telephone company. If the RJ11-C jack is not present, installation cannot occur.
3. Order a regular voice grade line or the equivalent from your telephone company's business representative.

   Use one line per machine.

   DDD (DIRECT DISTANCE DIAL) LINE

   -or-

   IDDD (INTERNATIONAL DIRECT DISTANCE DIAL) LINE IF YOU COMMUNICATE OVERSEAS

NOTE

Canon recommends an individual line following industry standards, e.g. the 2500 (Touch Tone) or 500 (Rotary/Pulse Dial) telephones. A dedicated extension off a PBX machine without "Call Waiting" can be used with the machine. Key telephone systems are not recommended because they send non-standard signals to individual telephones for ringing and special codes, which may cause a fax error. This machine is not supported on Voice Over Internet Protocol (VOIP).

C. Power Requirements

This equipment should be connected to a standard 120-volt AC, three-wire grounded outlet only. Do not connect this machine to an outlet or power line shared with other appliances that cause "electrical noise." Air conditioners, electric typewriters, copiers, and machines of this sort generate electrical noise which often interferes with communications equipment and the sending and receiving of documents.

Connection of the Equipment

This equipment complies with Part 68 of the FCC rules and the requirements adopted by the ACTA. On the rear panel of this equipment is a label that contains, among other information, a product identifier in the format US:AAAEQ##TXXXX. If requested, this number must be provided to the telephone company.
An FCC compliant telephone cord and modular jack are provided with this equipment. This equipment is designed to be connected to the telephone network or premises wiring using a compatible modular jack which is Part 68 compliant. See the Starter Guide for details.
The Ringer Equivalence Number (REN) is used to determine the number of devices that may be connected to a telephone line. Excessive RENs on a telephone line may result in the devices not ringing in response to an incoming call. In most but not all areas, the sum of RENs should not exceed five (5.0). To be certain of the number of devices that may be connected to a line, as determined by the total RENs, contact the local telephone company. The REN for this product is part of the product identifier that has the format US:AAAEQ##TXXXX. The digits represented by ## are the REN without a decimal point (e.g., 10 is a REN of 1.0).
This equipment may not be used on coin service provided by the telephone company. Connection to party lines is subjected to state tariffs.

In Case of Equipment Malfunction

Should any malfunction occur which cannot be corrected by the procedures described in this guide, disconnect the equipment from the telephone line and unplug the power cord. The telephone line should not be reconnected or the power cord plugged in until the problem is completely resolved. Users should contact Canon Authorized Service Facilities for servicing of equipment. Information regarding Authorized Service Facility locations can be obtained by calling Canon Customer Care Center (1-800-828-4040).

Rights of the Telephone Company

Should the equipment cause harm to the telephone network, the telephone company may temporarily disconnect service. The telephone company also retains the right to make changes in facilities and services which may affect the operation of this equipment. When such changes are necessary, the telephone company is required to give adequate prior notice to the user.

FCC Notice

imageCLASS MF6530: Model F189100
imageCLASS MF6531: Model F189100
imageCLASS MF6550: Model F189102
imageCLASS MF6560: Model F189102
imageCLASS MF6580: Model F189102

This device complies with Part 15 of the FCC Rules. Operation is subject to the following two conditions:

(1) This device may not cause harmful interference, and

(2) this device must accept an interference received, including interference that may cause undesired operation.

NOTE

This equipment has been tested and found to comply with the limits for a class B digital device, pursuant to Part 15 of the FCC Rules. These limits are designed to provide reasonable protection against harmful interference in a residential installation. This equipment generates, uses and can radiate radio frequency energy and, if not installed and used in accordance with the instructions, may cause harmful interference to radio communications. However, there is no guarantee that interference will not occur in a particular installation. If this equipment does cause harmful interference to radio or television reception, which can be determined by turning the equipment off and on, the user is encouraged to try to correct the interference by one or more of the following measures:

- Reorient or relocate the receiving antenna.
- Increase the separation between the equipment and receiver.
- Connect the equipment into an outlet on a circuit different from that to which the receiver is connected.
- Consult the dealer or an experienced radio/TV technician for help.

Use of shielded cable is required to comply with class B limits in Subpart B of Part 15 of FCC Rules.
Do not make any changes or modifications to the equipment unless otherwise specified in this manual. If such changes or modifications should be made, you could be required to stop operation of the equipment.

Canon U.S.A. Inc.
One Canon Plaza, Lake Success, NY 11042, U.S.A.
TEL No. 1-516-328-5600

The Telephone Consumer Protection Act of 1991 makes it unlawful for any person to use a computer or other electronic device to send any message via a telephone fax machine unless such message clearly contains in a margin at the top or bottom of each transmitted page or on the first page of the transmission, the date and time it is sent and an identification of the business or other entity, or other individual sending the message and the telephone number of the sending machine or such business, other entity, or individual.
In order to program this information into the machine, follow the instructions in the Starter Guide.

Users in Canada

Pre-Installation Requirements for Canon Facsimile Equipment

A. Location

Supply a suitable table, cabinet, or desk. See p. 14-1 for the machine's weight and dimensions.

B. Order Information

1. Provide only a single-line to touch-tone or rotary telephone set terminated with a standard 4-pin modular phone plug. (Touch-tone is recommended if available in your area.)
2. Order an CA11A modular jack (USOC code), which should be installed by the telephone company. If the CA11A jack is not present, installation cannot occur.
3. Order a normal business line from your telephone company's business representative. The line should be a regular voice grade line or equivalent. Use one line per machine.

   DDD (DIRECT DISTANCE DIAL) LINE

   -or-

   IDDD (INTERNATIONAL DIRECT DISTANCE DIAL) LINE IF YOU COMMUNICATE OVERSEAS

NOTE

Canon recommends an individual line following industry standards, e.g., the 2500 (touch tone) or 500 (rotary/pulse dial) telephones. A dedicated extension off a PBX machine without "Camp On" signals is also permissible with the machine. Key telephone systems are not recommended because they send non-standard signals to individual telephones for ringing and special codes, which may cause a fax error.

C. Power Requirements

The power outlet should be a three-prong grounded receptacle (Single or Duplex). It should be independent from copiers, heaters, air conditioners or any electric equipment that is thermostatically controlled. The rated value is 120 volts and 15 amperes. The CA11A modular jack should be relatively close to the power outlet to facilitate installation.

Notice

This equipment meets the applicable Industry Canada Terminal Equipment Technical Specifications. This is confirmed by the registration number. The abbreviation, IC, before the registration number signifies that registration was performed based on a Declaration of Conformity indicating that Industry Canada technical specifications were met. It does not imply that Industry Canada approved the equipment.
Cet appareil est conforme aux Spécifications techniques des équipements terminaux de l'Industrie du Canada.
Ceci est confirmé par le numéro d'enregistrement. L'abréviation IC précédant le numéro d'enregistrement signifie que l'enregistrement a été effectué sur la base de la Déclaration de conformité indiquant que le produit est conforme aux spécifications techniques du Canada. Ceci n'implique pas que le produit ait été approuvé par l'industrie du Canada.
Before installing this equipment, users should ensure that it is permissible to be connected to the facilities of the local telecommunications company. The equipment must also be installed using an acceptable method of connection. The customer should be aware that compliance with the above conditions may not prevent degradation of service in some situations.
Repairs to certified equipment should be coordinated by a representative designated by the supplier. Any repairs or alterations made by the user to this equipment, or equipment malfunctions, may give the telecommunications company cause to request the user to disconnect the equipment.
Users should ensure for their own protection that the electrical ground connections of the power utility, telephone lines and internal metallic water pipe system, if present, are connected together. This precaution may be particularly important in rural areas.

CAUTION

Users should not attempt to make such connections themselves, but should contact the appropriate electric inspection authority, or electrician, as appropriate.

NOTE

This Class B digital apparatus meets all requirements of the Canadian Interference- Causing Equipment Regulations.
Cet appareil numérique de la classe B respecte toutes les exigences du Règlement sur le matériel brouilleur du Canada.

The Ringer Equivalence Number (REN) for this terminal equipment is 1.0. The REN assigned to each terminal equipment provides an indication of the maximum number of terminals allowed to be connected to a telephone interface. The termination on an interface may consist of any combination of devices subject only to the requirement that the sum of the Ringer Equivalence Numbers of all the devices does not exceed five.

Le Nombre d'équivalence Ringer (REN) de cet appareil terminal est 1.0. Le REN attribué à chaque équipement terminal fournit une indication sur le nombre maximum de terminaux pouvant être connectés sur une interface téléphonique. La terminaison sur une interface peut consister en n'importe quelle combinaison d'appareils, à la condition seulement que la somme des Nombres d'équivalence Ringer de tous les appareils ne soit pas supérieure à 5.

CANON CANADA INC.
1-800-263-1121
24 HOURS A DAY, SEVEN DAYS A WEEK

Laser Safety

This machine complies with 21 CFR Chapter 1 Subchapter J as a Class 1 laser product under the U.S. Department of Health and Human Services (DHHS) Radiation Performance Standard according to the Radiation Control for Health and Safety Act of 1968. This means that the machine does not produce hazardous radiation.
Since radiation emitted inside the machine is completely confined within protective housings and external covers, the laser beam cannot escape from the machine during any phase of user operation.

CDRH Regulations

The Center for Devices and Radiological Health (CDRH) of the U.S. Food and Drug Administration implemented regulations for laser products on August 2, 1976. These regulations apply to laser products manufactured from August 1, 1976. Compliance is mandatory for products marketed in the United States.

CAUTION

Use of controls, adjustments, or performance of procedures other than those specified in this manual may result in hazardous radiation exposure.

The label is attached to the laser scanner machine inside the machine and is not in a user access area.

1 Before Using the Machine

Machine Components

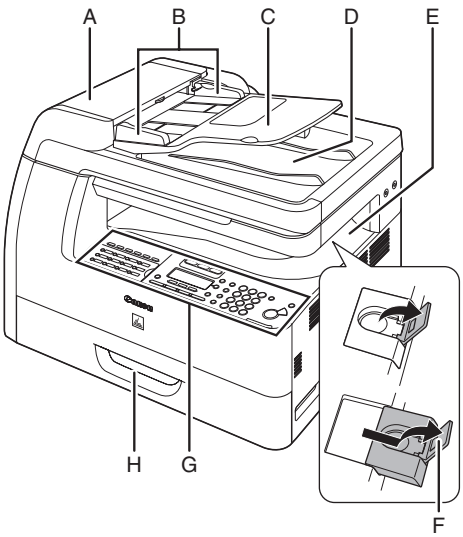

A ADF (Automatic Document Feeder)
Holds documents and feeds them automatically into the scanning area.

B Slide guides
Adjusts to the width of the document.

C Document feeder tray
Holds documents.

D Document delivery tray
Receives documents.

E Paper delivery tray
Receives copies, prints and faxes.

F Paper stopper
Prevents the paper from falling off the paper delivery tray.
Open the stopper from its original position for A4/LTR size paper. For LGL size paper, pull out the extension first, and then open the stopper.

G Operation panel
Machine controls.

H Paper cassette
Holds the paper supply.

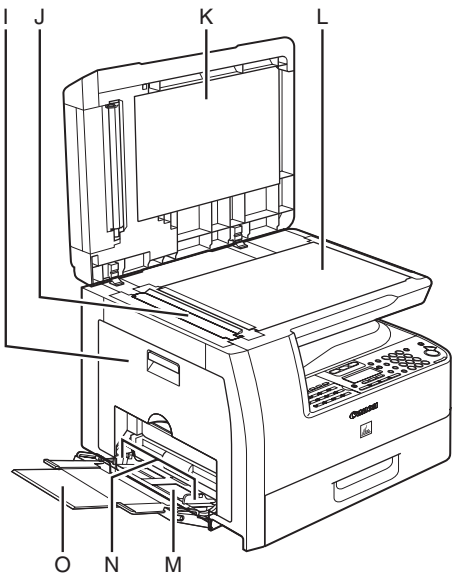

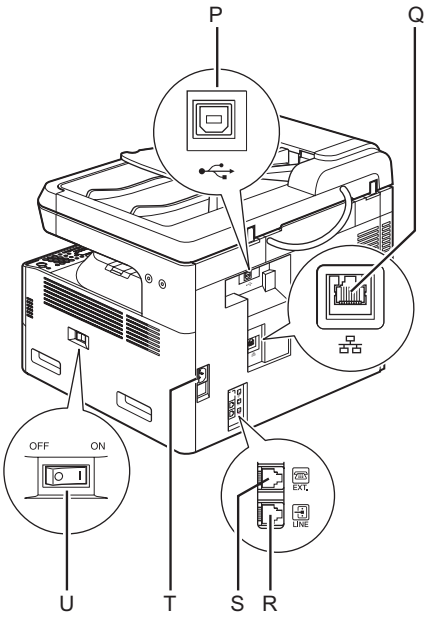

I Left cover
Open this cover when replacing the toner cartridge or clearing paper jams.

J Scanning area
Scans documents from the ADF.

K Platen glass cover
Open this cover when placing a document on the platen glass.

L Platen glass
Place documents.

M Multi-purpose tray
Feeds non-standard size or thick/thin type paper stacks.

N Slide guides for multi-purpose tray
Adjusts to the width of the paper.

O Multi-purpose tray extension
Pull out to load paper stack.

P USB port
Connect the USB (Universal Serial Bus) cable.

Q Ethernet port (MF6580 only)
Connect the network cable.

R Telephone line jack (MF6550/MF6560/MF6580 only)
Connect the external telephone cable.

S External device jack (MF6550/MF6560/MF6580 only)
Connect an external device.

T Power socket
Connect the power cord.

U Main power switch
Turns the power on or off.

Operation Panel

Main Operation Panel

● MF6550/MF6560/MF6580

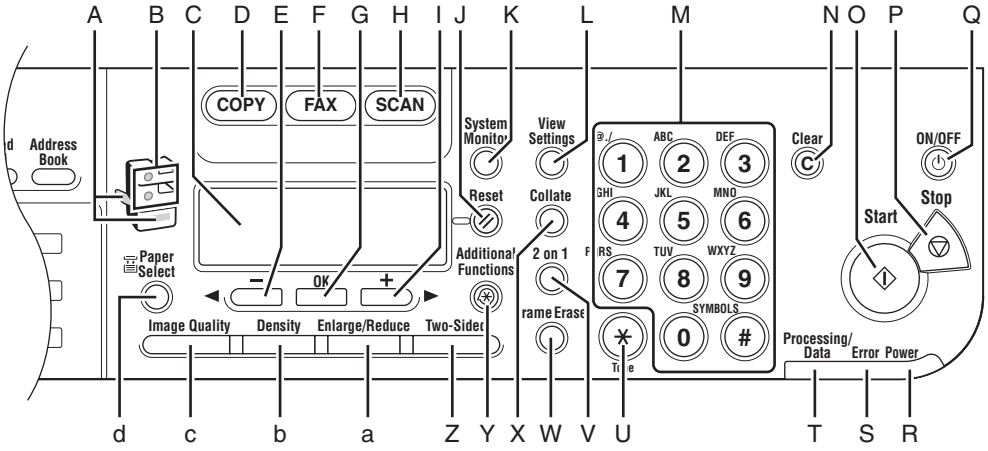

A Paper Select indicator
Indicates the selected paper source.
* The number of paper sources varies depending on the model used.

B Jam Location indicator
Indicates the location of paper jams.

C LCD display
Displays messages and prompts during operation. Displays selection, text, and numbers when adjusting the settings.

D COPY key
Press to switch to Copy mode.

E ◄– key
Press to decrease the value for various settings. Also press to see the previous item in the menu.

F FAX key
Press to switch to Fax mode.

G OK key
Press to determine the contents you set or register.

H SCAN key
Press to switch to Scan mode.

I +► key
Press to increase the value for various settings. Also press to see the next item in the menu.

J Reset key
Press to return the machine to standby mode.

K System Monitor key
Press to check fax transmission, print, copy, or report output status.

L View Settings key
Press to confirm settings of the copy function.

M Numeric keys
Enter letters and numbers.

N Clear key
Press to clear entered alphanumeric characters.

O Start key
Press to start copying, scanning and sending faxes.

P Stop key
Press to cancel machine operations.

Q ON/OFF key (operation panel power switch)
Press to turn the operation panel on/off. Also press to enter Sleep mode or to resume the normal mode from Sleep mode manually.

R Power indicator
Lights up when the main power is turned on.

S Error indicator
Flashes or lights up when an error has occurred.

T Processing/Data indicator
Flashes when the machine is working. Lights up when the machine has waiting jobs.

U Tone key
Press to switch from rotary pulse to tone dialing.

V 2 on 1 key
Press to set 2 on 1 copying.

W Frame Erase key
Press to set frame erase for copying.

X Collate key
Press to set collate copying.

Y Additional Functions key
Press to select or cancel modes in Additional Functions.

Z Two-Sided key
Press to set two-sided copying or faxing.

a Enlarge/Reduce key
Press to enlarge or reduce copy ratio.

b Density key
Press to lighten or darken the copies or faxes.

c Image Quality key
Press to select image quality for copying and faxing.

d Paper Select key
Press to select a paper source (paper cassette or multi-purpose tray).

● MF6530/MF6531

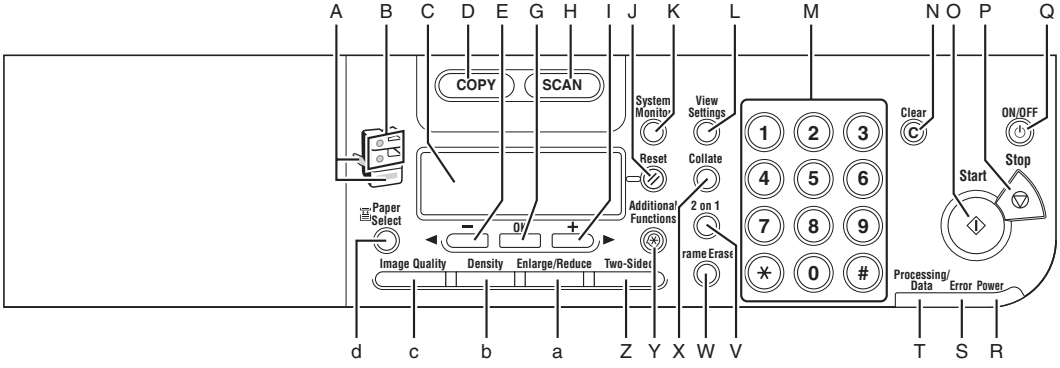

Facsimile Operation Panel (MF6550/MF6560/MF6580 Only)

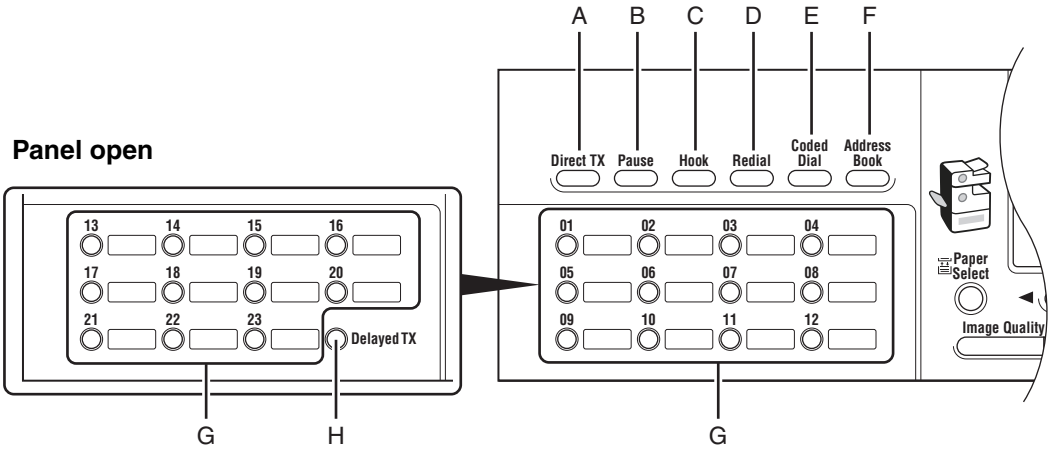

A Direct TX key
Press to set Direct Sending.

B Pause key
Inserts a pause when entering a fax number.

C Hook key
Press when you want to dial without lifting the handset of the external telephone.

D Redial key
Press to redial the last number dialed manually with the numeric keys when a fax is standing by.

E Coded Dial key
Press to perform coded speed dialing.

F Address Book key
Press to search preregistered destinations under one-touch speed dialing keys or coded speed dialing numbers by name.

G One-Touch Speed Dial keys
Press to use one-touch speed dialing (Pre-registered frequently used numbers).

H Delayed TX key
Press to set Delayed Sending.

LCD (Standby Mode)

Copy Mode

● Without optional cassette

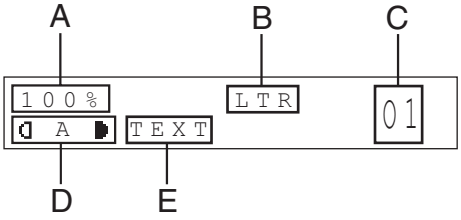

● With optional cassette

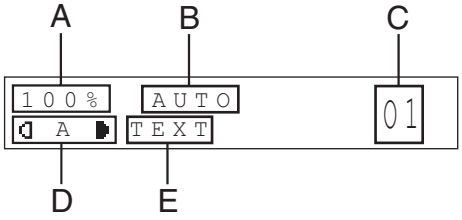

A Zoom ratio

B Paper size

C Quantity

D Density

E Image quality

Fax Mode*

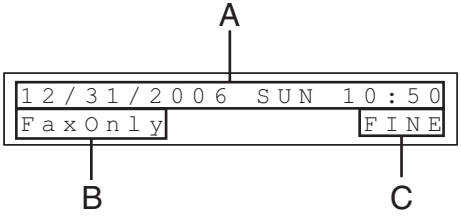

A Date & Time

B Receive mode

C Image quality

* MF6550/MF6560/MF6580 Only

Scan Mode

Toner Cartridge

The lifetime of the Canon Genuine starter toner cartridge which comes with the machine is approximately 2,500 pages, the Canon genuine replacement toner cartridge is approximately 5,000 pages. The page counts are on the basis of "ISO/IEC 19752"* when printing A4 size paper with the default print density setting. The level of toner consumption varies depending on the type of documents printed. If your average document contains a lot of graphics, tables, or charts, the life of the toner cartridge will be shorter as they consume more toner. To purchase the Canon genuine replacement toner cartridge, contact your local Canon dealer or Canon Customer Care Center (1-800-828-4040).

* "ISO/IEC 19752" is the global standard related to "Method for the determination of toner cartridge yield for monochromatic electrophotographic printers and multi-function devices that may contain printer components" issued by ISO (International Organization for Standardization).

Toner Cartridge name:
Canon Cartridge 106

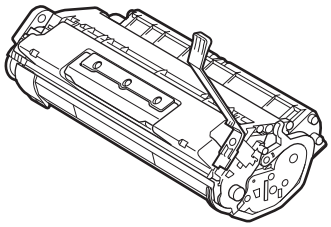

Maintaining the Toner Cartridge

- Keep the toner cartridge away from computer screens, disk drives, and floppy disks. The magnet inside the toner cartridge may harm these items.
- Avoid locations subject to high temperature, high humidity, or rapid changes in temperature.
- Do not expose the toner cartridge to direct sunlight or bright light for more than five minutes.
- Store the toner cartridge in its protective bag. Do not open the bag until you are ready to install the toner cartridge in the machine.
- Save the toner cartridge's protective bag in case you need to repack and transport the toner cartridge at a later date.
- Do not store the toner cartridge in a salty atmosphere or where there are corrosive gases such as from aerosol sprays.
- Do not remove the toner cartridge from the machine unnecessarily.

- Do not open the drum protective shutter on the toner cartridge. Print quality may deteriorate if the drum surface is exposed to light or is damaged.
- Always hold the toner cartridge by its handle to avoid touching the drum protective shutter.
- Do not stand the toner cartridge on end, and do not turn it upside down. If toner becomes caked in the toner cartridge, it may become impossible to free it even by shaking the toner cartridge.

CAUTION

Do not place the toner cartridge in fire. Toner powder is flammable.

Timer Settings

Setting Sleep Mode

When the machine remains idle for a certain period of time, it automatically enters Sleep mode.

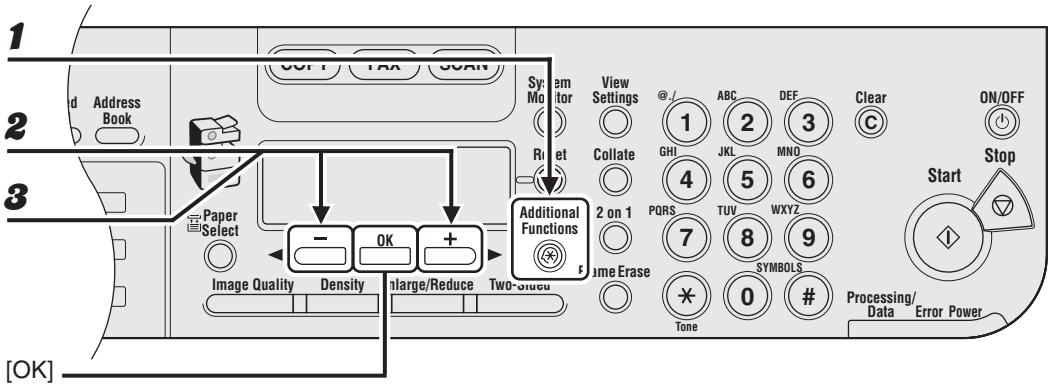

1 **Press [Additional Functions].**

2 **Press [◄ –] or [+ ►] to select <TIMER SETTINGS>, then press [OK].**

3 **Press [◄ –] or [+ ►] to select <AUTO SLEEP TIME>, then press [OK].**

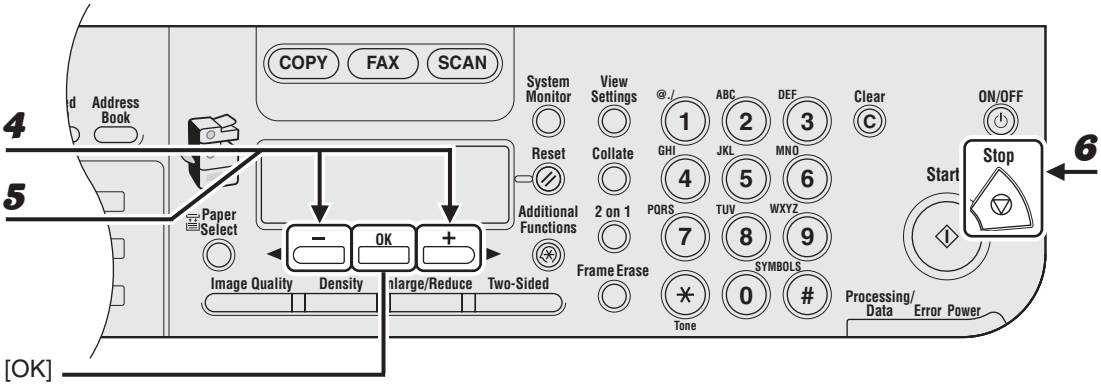

4 **Confirm that <ON> is displayed, then press [OK].**

5 **Press [◄ –] or [+ ►] to select the desired interval, then press [OK].**

You can set the interval from 3 to 30 minutes (in one-minute increments).
You can also enter values using numeric keys.

6 **Press [Stop] to return to standby mode.**

NOTE

– To resume normal mode from Sleep mode, press [ON/OFF] on the operation panel.
– To enter Sleep mode manually, press [ON/OFF] on the operation panel.
– The machine will not enter Sleep mode when:
  - the machine is in operation
  - a system error occurs
  - the handset of the external telephone is off the hook*
– The machine will leave Sleep mode when:
  - you press [ON/OFF] on the operation panel
  - a computer performs a scan through the machine

* MF6550/MF6560/MF6580 Only

Setting Auto Clear Time

If the machine remains idle for a certain period of time, the display returns to standby mode (Auto Clear function).

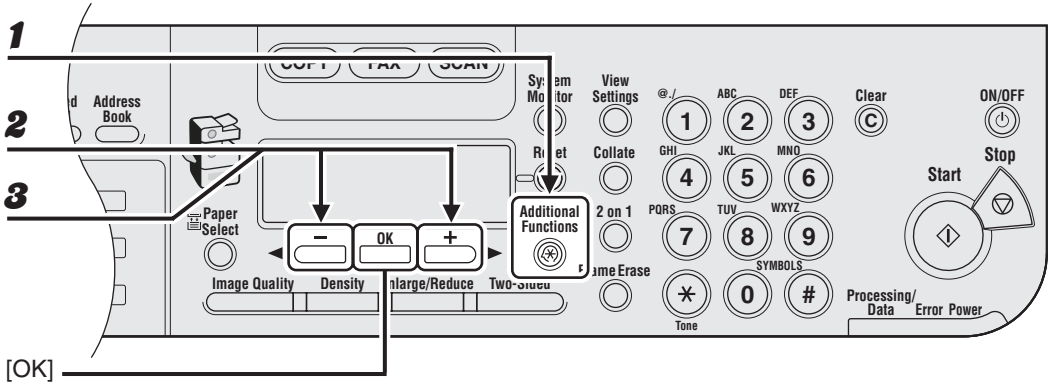

1 **Press [Additional Functions].**

2 **Press [◄ –] or [+ ►] to select <TIMER SETTINGS>, then press [OK].**

3 **Press [◄ –] or [+ ►] to select <AUTO CLEAR TIME>, then press [OK].**

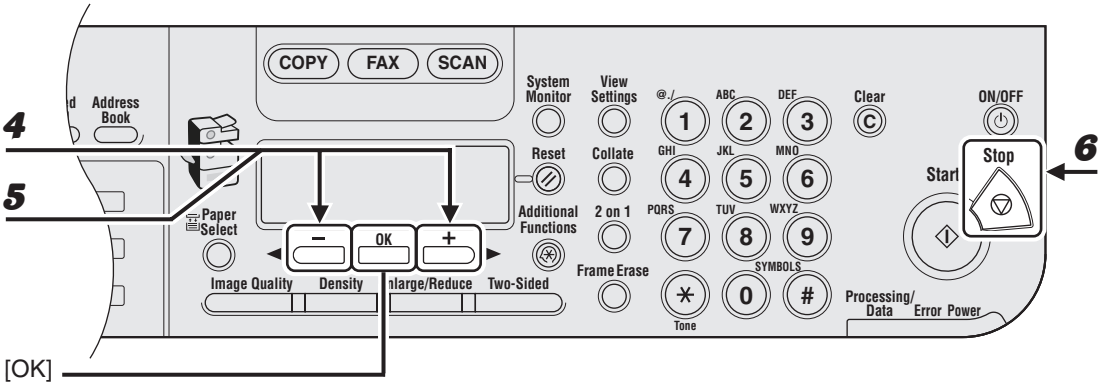

4 **Confirm that <ON> is displayed, then press [OK].**

5 **Press [◄ –] or [+ ►] to select the desired interval, then press [OK].**

You can set the interval from 1 to 9 minutes (in one-minute increments).
You can also enter values using numeric keys.

6 **Press [Stop] to return to standby mode.**

Setting Daylight Saving Time

In some countries or areas, time is advanced throughout the summer season. This is called “Daylight Saving Time.”

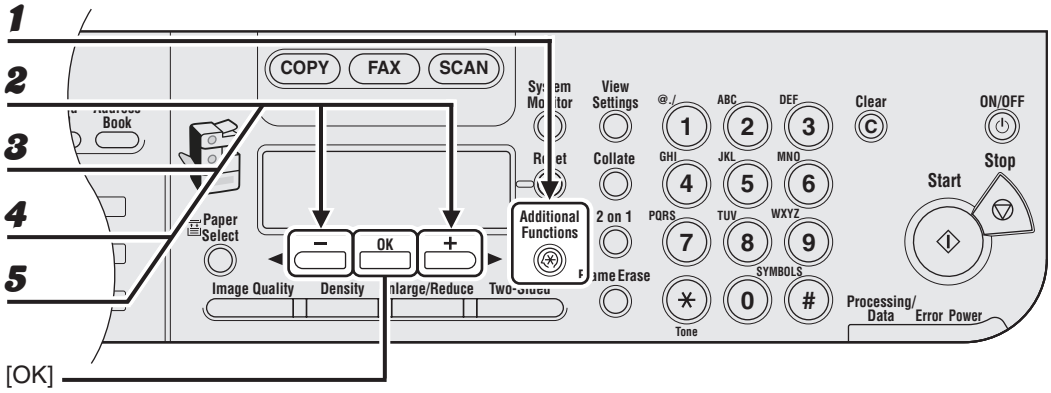

1 **Press [Additional Functions].**

2 **Press [◄ –] or [+ ►] to select <TIMER SETTINGS>, then press [OK].**

3 **Press [◄ –] or [+ ►] to select <DAYLIGHT SV.TIME>, then press [OK].**

4 **Press [◄ –] or [+ ►] to select <ON>, then press [OK].**

5 **Confirm that <START DATE/TIME> is displayed, then press [OK].**

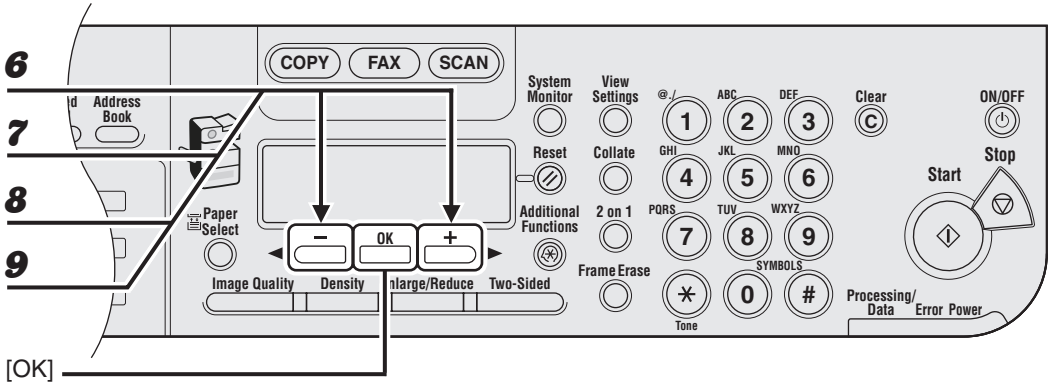

6 **Confirm that <MONTH> is displayed, then press [OK].**

7 **Press [◄ –] or [+ ►] to select the month, then press [OK].**

8 **Confirm that <WEEK> is displayed, then press [OK].**

9 **Press [◄ –] or [+ ►] to select the week, then press [OK].**

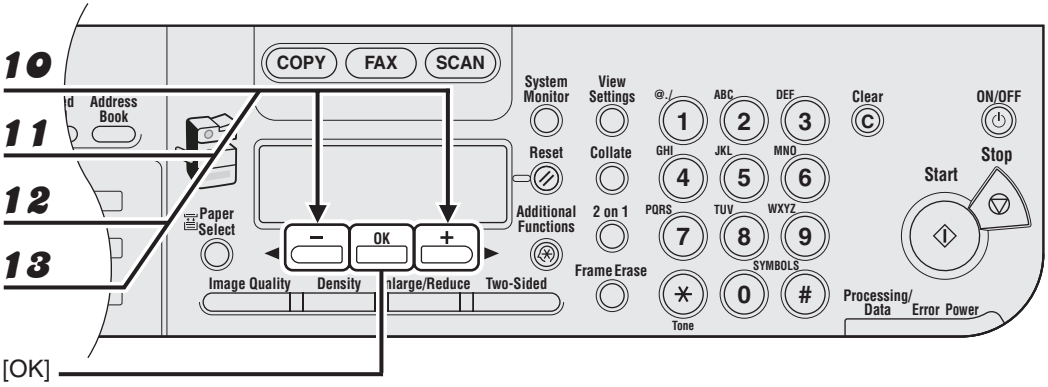

10 **Confirm that <DAY> is displayed, then press [OK].**

11 **Press [◄ –] or [+ ►] to select the day, then press [OK].**

12 **Confirm that <END DATE/TIME> is displayed, then press [OK].**

13 **Confirm that <MONTH> is displayed, then press [OK].**

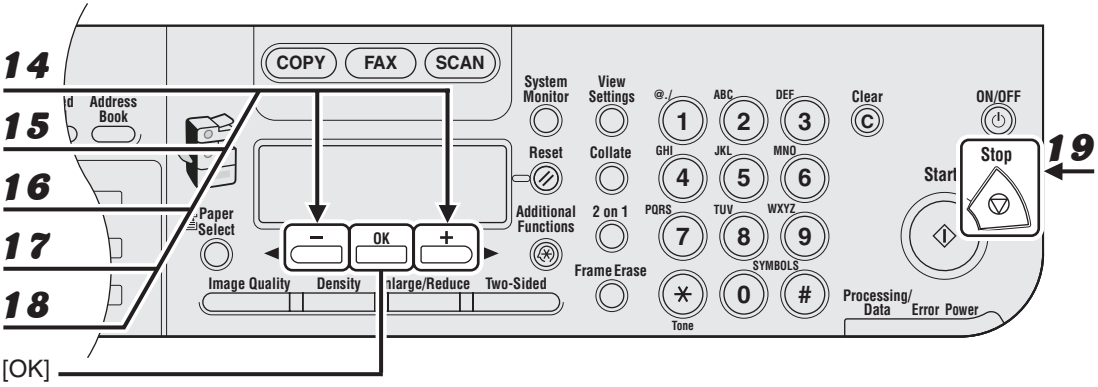

14 **Press [◄ –] or [+ ►] to select the month, then press [OK].**

15 **Confirm that <WEEK> is displayed, then press [OK].**

16 **Press [◄ –] or [+ ►] to select the week, then press [OK].**

17 **Confirm that <DAY> is displayed, then press [OK].**

18 **Press [◄ –] or [+ ►] to select the day, then press [OK].**

19 **Press [Stop] to return to standby mode.**

2 Document Handling

Document Requirements

	Platen Glass	ADF
Type	– Plain paper – Thick documents – Photographs – Small documents (e.g., index cards) – Special types of paper (e.g., tracing paper*1, transparencies*1, etc.) – Book (Height: max. 7/8" (20 mm))	Plain paper (Multipage documents of the same size, thickness and weight or one page documents.)
Size (W x L)	Max. 8 1/2" x 14" (Max. 216 x 356 mm)	Max. 8 1/2" x 14" (Max. 216 x 356 mm) Min. 5 1/2" x 5" (Min. 139.7 x 128 mm)
Weight	Max. 4.4 lb (2 kg)	16 to 32 lb bond (50 to 128 g/m^2)
Quantity	1 sheet	Max. 50 sheets*2 (Max. 25 sheets for LGL documents)

*1 When copying a transparent document such as tracing paper or transparencies, use a piece of plain white paper to cover the document after placing it face-down on the platen glass.
*2 22 lb bond (80 g/m^2) paper

- Do not place the document on the platen glass or in the ADF until the glue, ink or correction fluid on the document is completely dry.
- Remove all fasteners (staples, paper clips, etc.) before loading the document in the ADF.
- To prevent document jams in the ADF, do not use any of the following:
  - Wrinkled or creased paper
  - Carbon paper or carbon-backed paper
  - Curled or rolled paper
  - Coated paper
  - Torn paper
  - Onion skin or thin paper
  - Documents with staples or paper clips attached
  - Paper printed with a thermal transfer printer
  - Transparencies

Scanning Area

Make sure your document's text and graphics fall within the shaded area in the following diagram. Note that the margin widths listed are approximate and there may be slight variations in actual use.

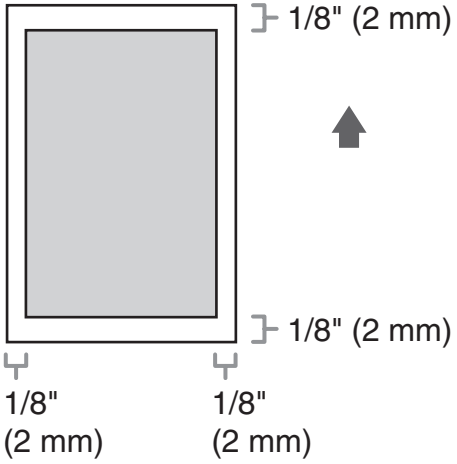

Loading Documents

On the Platen Glass

1 **Lift up the platen glass cover.**

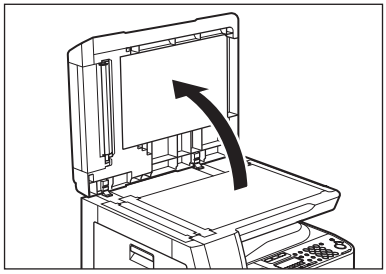

2 **Place your document face down.**

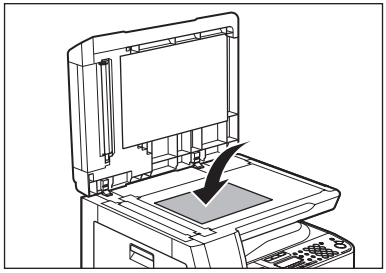

3 **Align the document with the appropriate paper size marks.**

If your document does not match any of the paper size marks, align the center of your document with the arrow mark.

4 Gently lower the platen glass cover.

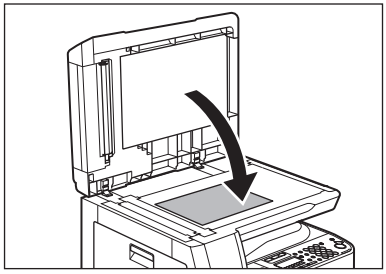

The document is ready for scanning.

CAUTION

- **When closing the platen glass cover, be careful not to get your fingers caught, as this may result in personal injury.**
- **Do not press down the platen glass cover forcefully, as this may damage the platen glass and cause personal injury.**

NOTE

Remove the document from the platen glass when scanning is complete.

In the ADF

1 **Fan the document stack and even the edges.**

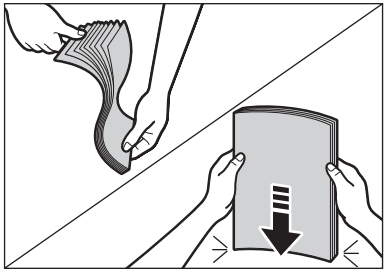

2 **Adjust the slide guides to the width of the documents.**

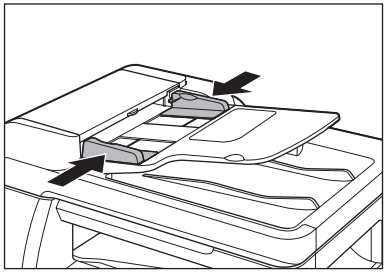

3 Neatly place the documents face up in the document feeder tray.

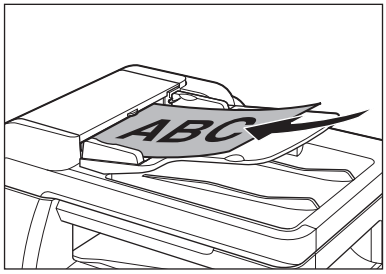

The document is ready for scanning.

NOTE

– Do not add or remove documents while they are being scanned.
– When scanning is complete, remove the documents from the document delivery tray to avoid paper jams.
– Avoid using ADF to scan the same document more than 30 times. When scanned repeatedly, documents can become folded or torn, which may cause paper jams.
– If the feeder rollers are soiled from scanning a document written in pencil, clean them. (See “Cleaning the Machine,” on p. 11-1.)

3 Print Media

Paper Requirements

		Paper cassette	Multi-purpose tray
Size (W x L)		Legal, Letter	3" × 5" to Legal (8 1/2" × 14") (76 × 127 to 216 × 356 mm)
Weight		18 to 24 lb bond (64 to 90 g/m^2)	16 to 32 lb bond (56 to 128 g/m^2)
Quantity		Max. 500 sheets [*1]	Max. 100 sheets [*1]
Type	Plain [*2]	○	○
	Color [*2]	○	○
	Recycled [*2]	○	○
	Heavy 1 [*3]	○	○
	Heavy 2 [*4]	–	○
	Heavy 3 [*5]	–	○
	Bond [*6]	○	○
	3hole punch paper [*7]	○	○
	Transparency [*8]	–	○
	Labels	–	○
	Envelopes	–	○

(○: available –: not available)

[*1] 22 lb bond (80 g/m^2) paper
[*2] From 18 to 22 lb bond (64 to 80 g/m^2)
[*3] From 22 to 24 lb bond (81 to 90 g/m^2)
[*4] From 24 to 28 lb bond (91 to 105 g/m^2)
[*5] From 28 to 32 lb bond (106 to 128 g/m^2)
[*6] 20 lb bond (75 g/m^2)
[*7] LTR size only
[*8] Use only LTR transparencies made especially for this machine.

NOTE

The default paper size is LTR. If you use a different paper size, you must change the paper size settings. (See “Setting Paper Type and Size,” on p. 3-8.)

Printable Area

The shaded area indicates the approximate printable area of LTR paper.

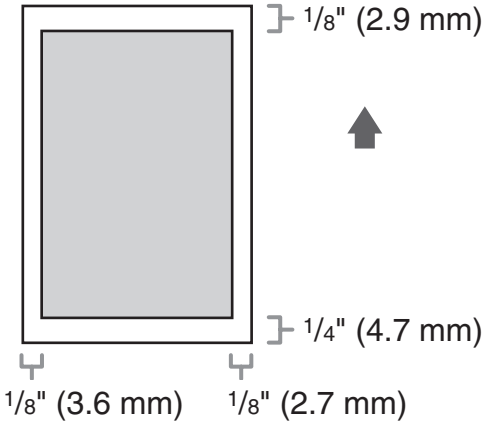

Paper Guidelines

- To prevent paper jams, do not use any of the following:
  - Wrinkled or creased paper
  - Curled or rolled paper
  - Coated paper
  - Torn paper
  - Damp paper
  - Very thin paper
  - Paper which has been printed on using a thermal transfer printer (Do not copy on the reverse side.)
- The following types of paper do not print well:
  - Highly textured paper
  - Very smooth paper
  - Shiny paper
- Make sure the paper is free from dust, lint, and oil stains.
- Be sure to test paper before purchasing large quantities.
- Store all paper wrapped and on a flat surface until ready for use. Keep opened packs in their original packaging in a cool, dry location.
- Store paper at 64.4°F–75.2°F (18°C–24°C), 40%–60% relative humidity.
- Use only transparencies designed for laser printers. Canon recommends you use Canon type transparencies with this machine.

Loading Paper

To load paper in the paper cassette, see "Set Up the Machine," in the Starter Guide.

In the Multi-Purpose Tray (e.g., Envelopes)

If you are making prints on transparencies, labels, nonstandard-sized paper, or envelopes, load them into the multi-purpose tray.

- Use standard envelopes with diagonal seams and flaps.
- To prevent jams, do not use the following:
  - Envelopes with windows, holes, perforations, cutouts, or double flaps
  - Envelopes made with special coated paper or deeply embossed paper
  - Envelopes with peel-off sealing strips
  - Envelopes with letters enclosed
- Make sure to set the correct envelope size in the printer driver. (See online help.)

1 **Open the multi-purpose tray.**

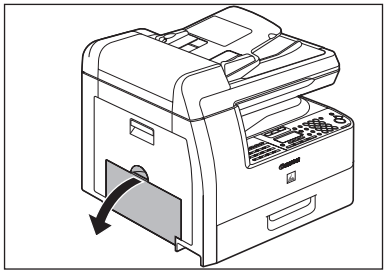

2 Pull out the multi-purpose tray extension until it clicks, then open it.

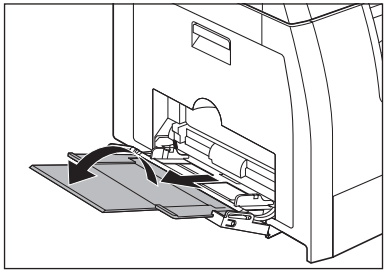

NOTE

Do not load the paper without using the multi-purpose tray extension.

3 Gently load the stack of envelopes with the address side facing down and the flap side to the left. Be sure to insert the envelopes as far as they will go.

When you load the envelopes, arrange the stack of envelopes on a firm, clean surface first, then press down firmly on the edges to make the folds crisp.

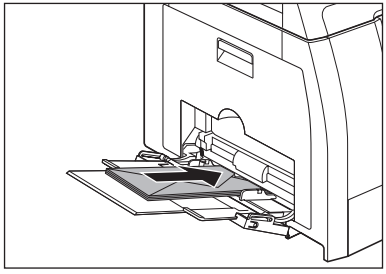

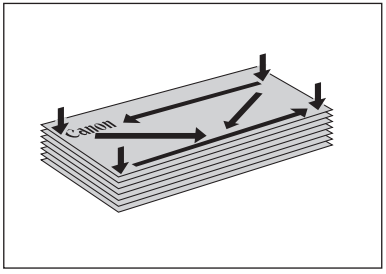

4 Adjust the slide guides to the width of the paper stack.

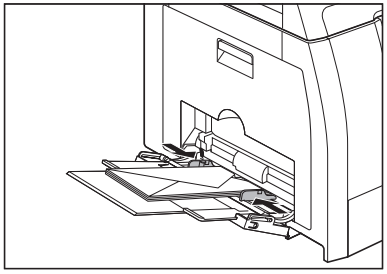

NOTE

– Make sure that the paper stack does not exceed the paper limit guide.
– Some types of paper may not feed properly into the multi-purpose tray. For high quality copies, be sure to use the paper and transparencies recommended by Canon.
– When making copies of a small document or thick paper, etc., the copy speed may be slightly slower than usual.

Setting Paper Type and Size

For the Paper Cassette

The default settings are <PLAIN PAPER> and <LTR>. When you place other types and/or sizes of paper, follow this procedure to change the settings.

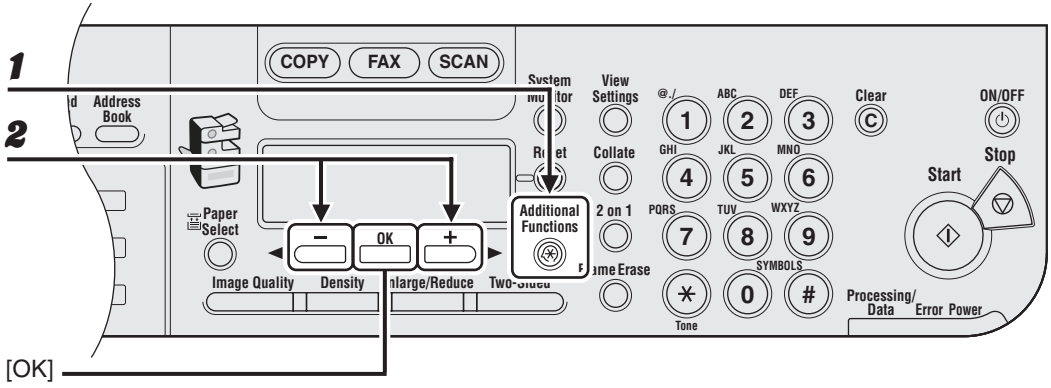

1 **Press [Additional Functions].**

2 **Confirm that <COMMON SETTINGS> is displayed, then press [OK].**

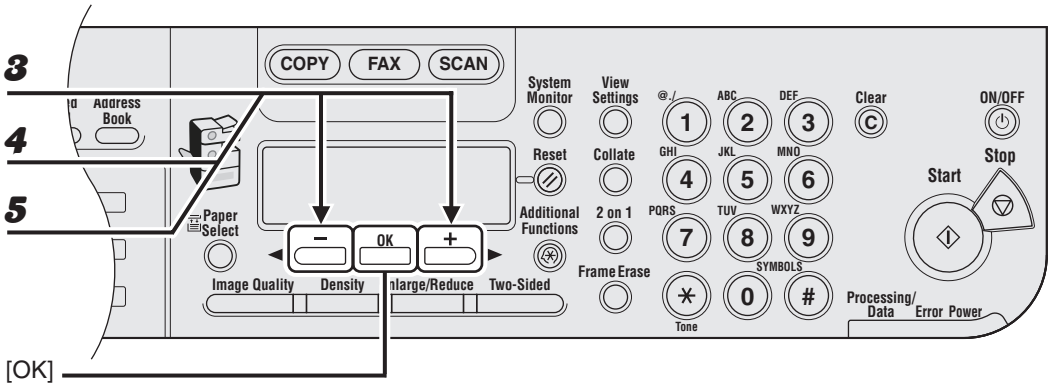

3 **Press [◄ –] or [+ ►] to select <SELECT PAPER TYPE>, then press [OK].**

4 **Confirm that <CASSETTE 1> is displayed, then press [OK].**

5 **Press [◄ –] or [+ ►] to select the paper type, then press [OK].**

<PLAIN PAPER>, <COLOR>, <RECYCLED>, <HEAVY PAPER 1>, <BOND>, <3HOLE PUNCH PAPER>

If you use the optional paper cassette, confirm that <CASSETTE 2> is displayed and repeat this step to set the paper type for <CASSETTE 2>.

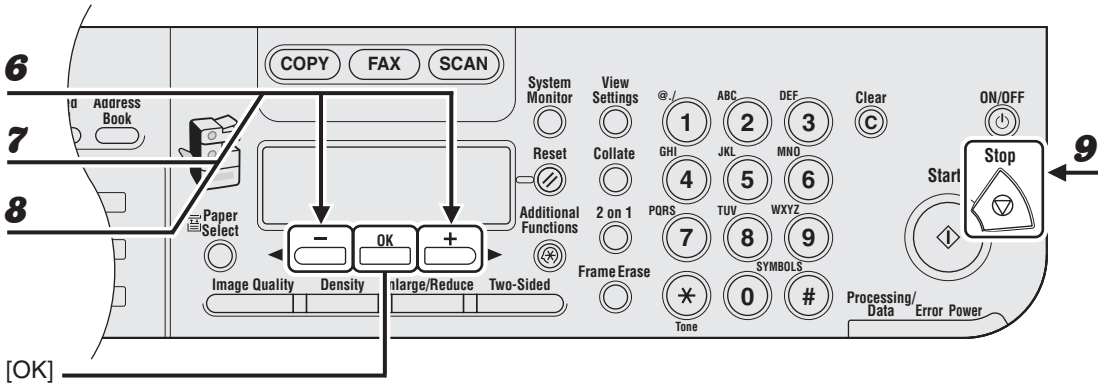

6 **Confirm that <REG. PAPER SIZE> is displayed, then press [OK].**

7 **Confirm that <CASSETTE 1> is displayed, then press [OK].**

8 **Press [◄ –] or [+ ►] to select the paper size, then press [OK].**

<LTR>, <LGL>, <A4>

If you use the optional paper cassette, confirm that <CASSETTE 2> is displayed and repeat this step to set the paper size for <CASSETTE 2>.

9 **Press [Stop] to return to standby mode.**

For the Multi-Purpose Tray

If you use same kind of paper for the multi-purpose tray, you can specify the paper size and type.

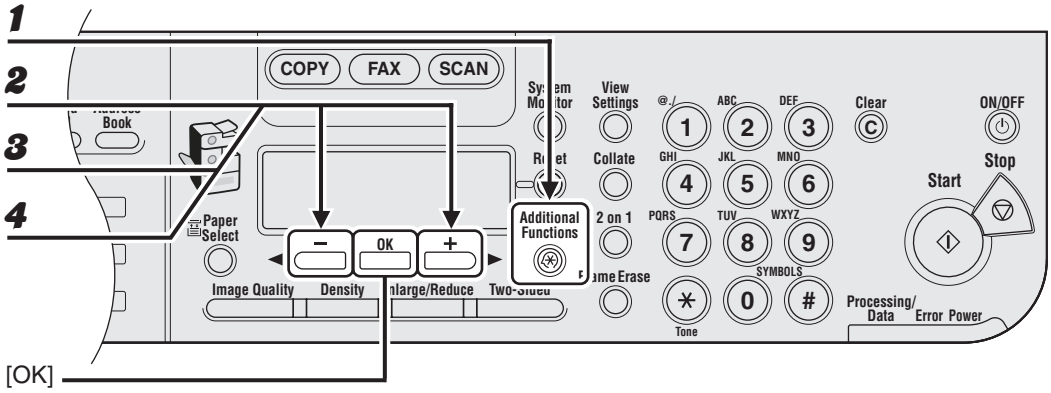

1 **Press [Additional Functions].**

2 **Confirm that <COMMON SETTINGS> is displayed, then press [OK].**

3 **Press [◄ –] or [+ ►] to select <MP TRAY STD SET>, then press [OK].**

4 **Press [◄ –] or [+ ►] to select <ON>, then press [OK].**

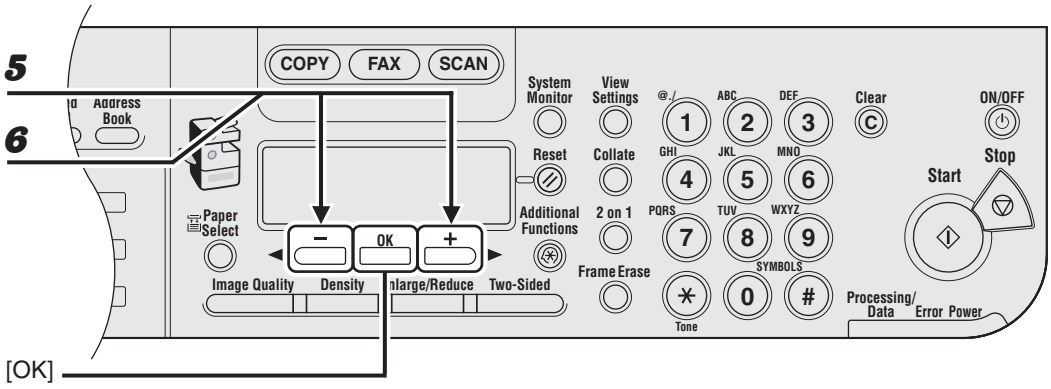

5 Confirm that <PAPER SIZE> is displayed, then press [OK].

6 Press [◄ –] or [+ ►] to select the paper size, then press [OK].

<LTR>, <STMTR>, <EXECUTIV>, <OFICIO>, <BRAZIL-OFICIO>, <MEXICO-OFICIO>, <FOLIO>, <G-LTR>, <G-LGL>, <FLSP>, <COM10>*1, <MONARCH>*1, <DL>*1, <ISO-C5>*1, <ISO-B5>*1, <FREESIZE>*2, <A4>, <B5>, <A5R>, <LGL>

*1 For envelopes.
If you select this size, <ENVELOPE> is automatically selected for the paper type, and the display for selecting the paper type does not appear. Skip to step 9.

*2 For non-standard paper size.
If you select this size, enter the vertical size in <VERTICAL SIZE>, then press [OK].
Enter the horizontal size in <HORIZONTAL SIZE>, then press [OK].

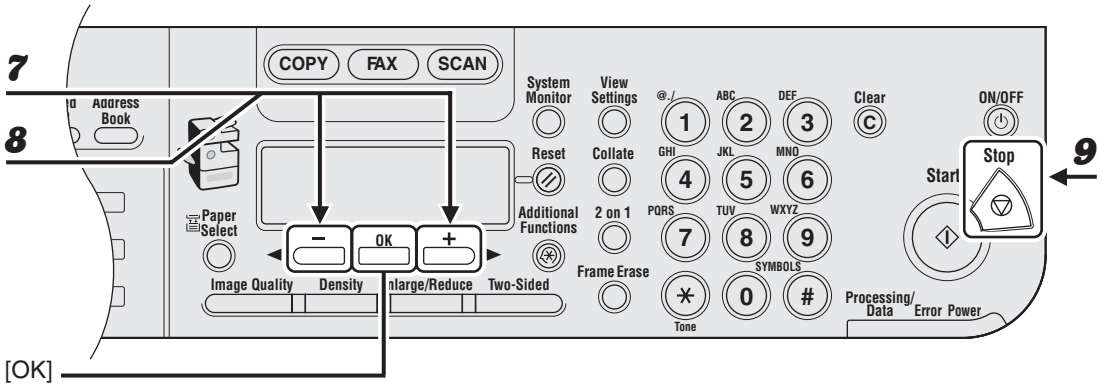

7 **Confirm that <SELECT PAPER TYPE> is displayed, then press [OK].**

8 **Press [◄ –] or [+ ►] to select the paper type, then press [OK].**

<PLAIN PAPER>, <COLOR>, <RECYCLED>, <HEAVY PAPER 1>, <HEAVY PAPER 2>, <HEAVY PAPER 3>, <BOND>, <3HOLE PUNCH PAPER>, <TRANSPARENCY>, <LABELS>, <ENVELOPE>

9 **Press [Stop] to return to standby mode.**

4 Sending Faxes

(MF6550/MF6560/MF6580 Only)

Follow this procedure to send a fax.
For advanced sending features, see Chapter 1, “Advanced Fax Features,” in the Advanced Guide.

1 Set a Document

Place the document on the platen glass or load it in the ADF.

For documents you can fax, see “Document Requirements,” on p. 2-1.

2 Enter the Fax Mode

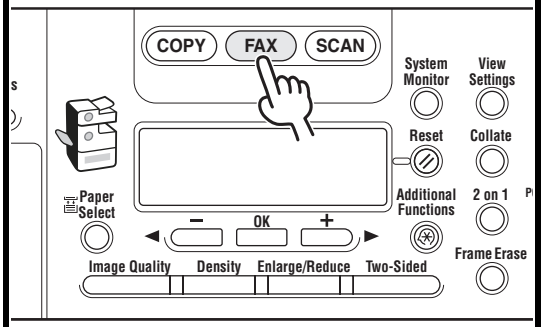

Press [FAX].

The FAX indicator lights up and the machine enters fax standby mode.

What if...

- **You want to adjust the resolution and density:**
  See “Scan Settings,” on p. 4-3.

3 Enter the Fax Number

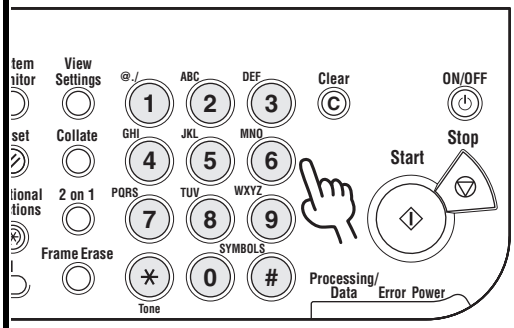

Dial the recipient's fax number with the numeric keys.

Ex.

```
TEL=012XXXXXXX
```

What if...

- **You enter a wrong number:**
  Go back to the wrong digit with [◄]. Or press [Clear] to delete the entire entry. Then try again.

4 Send the Document

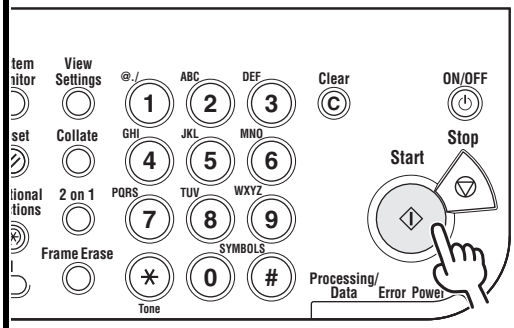

Press [Start].

When you set the documents on the platen glass, press [◄] or [+ ►] to select the document size, then press [Start] for each document. When scanning is complete, press [OK] to start dialing.

If the output paper in the recipient's machine is not equal to the scanned size, the original image may be reduced in size or divided into smaller parts before it is sent.

What if...

- **You want to cancel sending:**
  Press [Stop] on the operation panel.

  When the <STOP KEY PRESSED> message appears, press [OK].

  When the <CANCEL DURING TX/RX?> message appears, select <YES> with [◄].

Scan Settings

You can adjust the image quality and density of the document you send. The higher image quality you set, the better the output will be, but the longer the transmission will take. Adjust the scan settings according to the type of document you are sending.

Image Quality

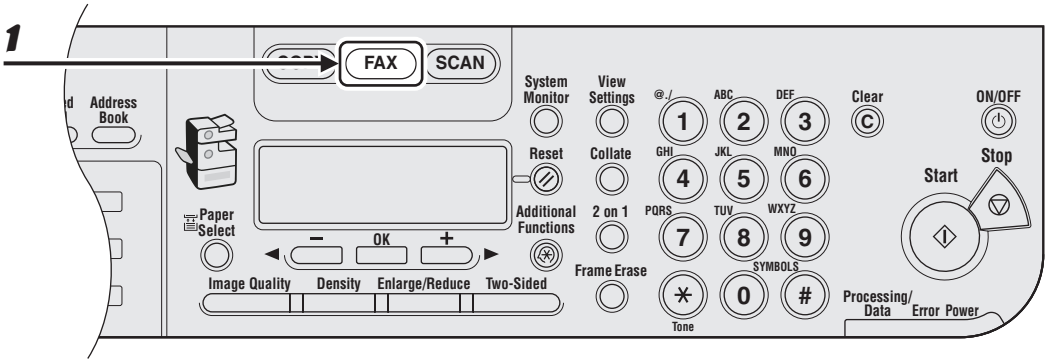

1 **Press [FAX].**

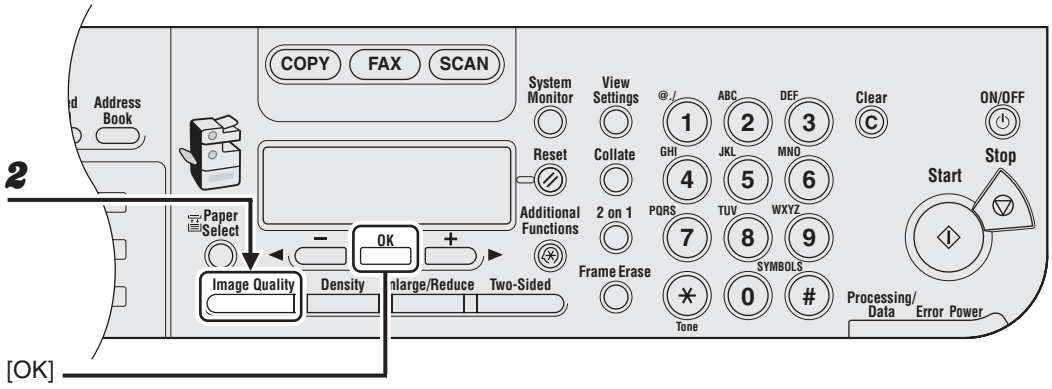

2 Press [Image Quality] repeatedly to select the resolution, then press [OK].

You can use [◄−] and [+►] to select the image quality.

<FINE> for fine-print documents (the resolution is twice that of <STANDARD>). (200 x 200 dpi)
<PHOTO> for documents that contain photographs (the resolution is twice that of <STANDARD>). (200 x 200 dpi)
<SUPER FINE> for documents that contain fine print and images (the resolution is four times that of <STANDARD>). (200 x 400 dpi)
<ULTRA FINE> for documents that contain fine print and images (the resolution is eight times that of <STANDARD>). (400 x 400 dpi)
<STANDARD> for most text-only documents. (200 x 100 dpi)

Density

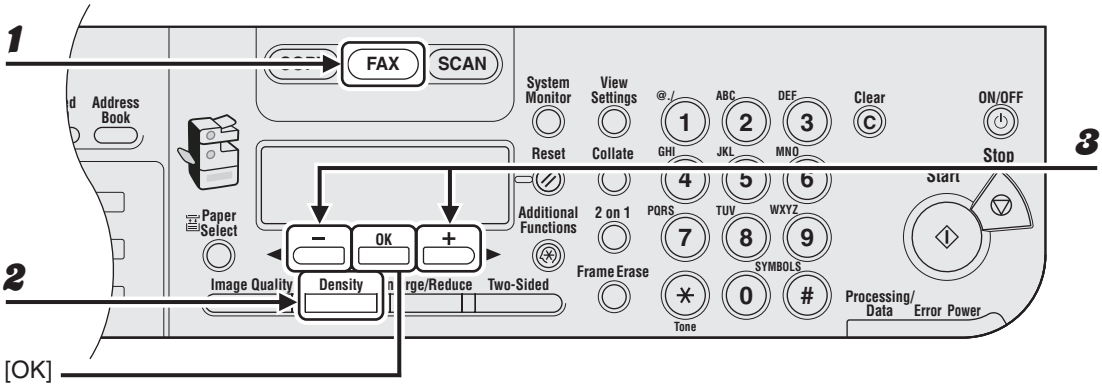

1 **Press [FAX].**

2 **Press [Density].**

3 **Press [◄ –] or [+ ►] to adjust the density, then press [OK].**

[+ ►]: to make light documents darker
[◄ –]: to make documents lighter

Speed Dialing

Speed dialing allows you to dial fax/telephone numbers by simply pressing one or a few keys. The following speed dialing methods are available:

- One-Touch Speed Dialing (p. 4-7)
  - Register a fax/telephone number for one-touch speed dialing, then to dial the number, simply press the one-touch speed dialing key assigned to that number. You can register up to 23 one-touch speed dialing keys, including group dialing.
- Coded Speed Dialing (p. 4-15)
  - Register a fax/telephone number for coded speed dialing, then to dial the number, simply press [Coded Dial] and enter the two-digit code assigned to that number. You can register up to 100 coded speed dialing codes, including group dialing.
- Group Dialing (p. 4-23)
  - Register a group of fax numbers (must be registered for one-touch speed dialing and/or coded speed dialing) for group dialing, then to send a document to all numbers in that group, simply press the one-touch speed dialing key, or press [Coded Dial] and enter the two-digit code assigned to that group. You can register up to 122 groups.

Registering Recipients for Speed Dialing

For each recipient, you can register:

- Name (optional)
- Fax number (required)

● Registering One-Touch Speed Dialing

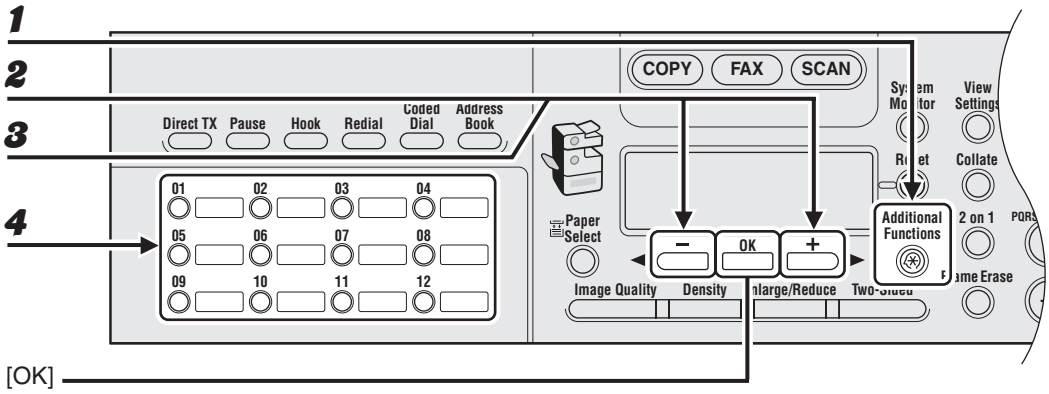

1 **Press [Additional Functions].**

2 **Press [◄ –] or [+ ►] to select <ADDRESS BOOK SET.>, then press [OK].**

3 **Confirm that <1-TOUCH SPD DIAL> is displayed, then press [OK].**

4 **Press a one-touch speed dialing key (01 to 23) for a registering fax number, then press [OK].**

You can also select a one-touch speed dialing key with [◄ –] or [+ ►].

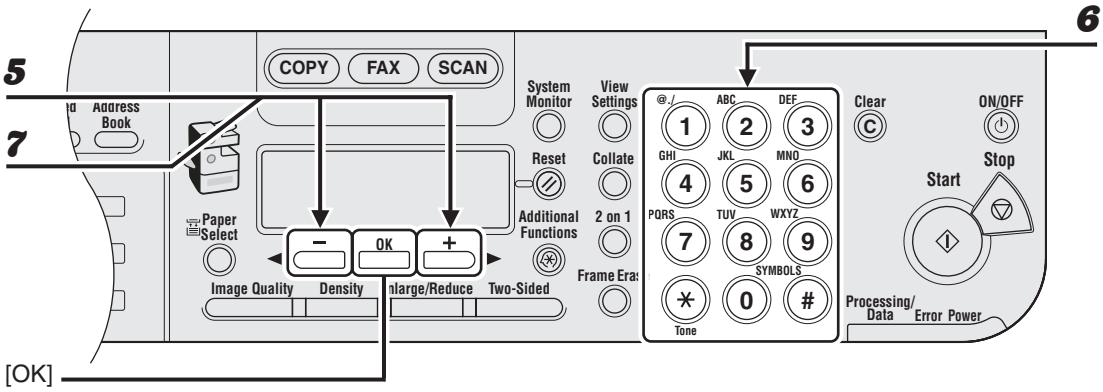

5 **Confirm that <TEL NUMBER ENTRY> is displayed, then press [OK].**

6 **Enter the fax number you register (max. 120 digits, including spaces and pauses) with the numeric keys, then press [OK].**

Ex.

```
TEL NUMBER ENTRY
012XXXXXXX_
```

7 **Confirm that <NAME> is displayed, then press [OK].**

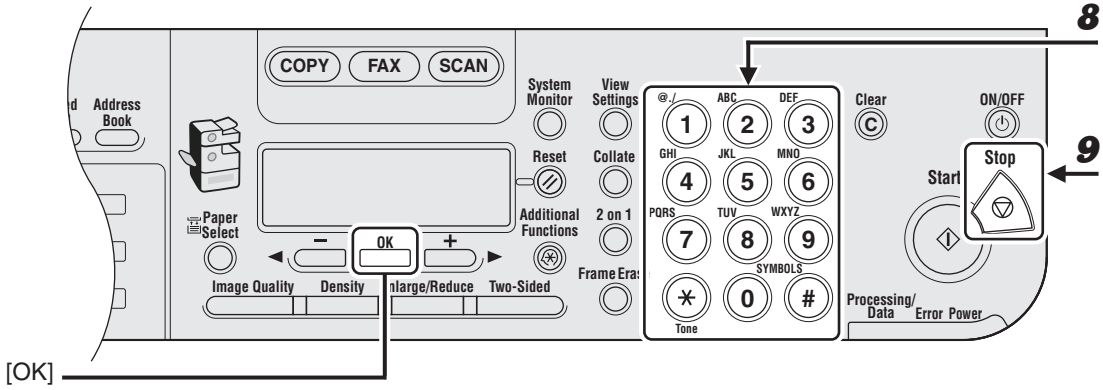

8 **Enter the destination name (max. 16 letters, including spaces) with the numeric keys, then press [OK].**

To register another one-touch speed dialing key, press [Additional Functions], then repeat the procedure from step 4.
You can set <OPTIONAL SETTING> for each destination. For details, see Chapter 1, “Advanced Fax Features,” in the Advanced Guide.

Ex.

```
NAME                    :A
CAN
```

9 **Press [Stop] to return to standby mode.**

● Editing One-Touch Speed Dialing

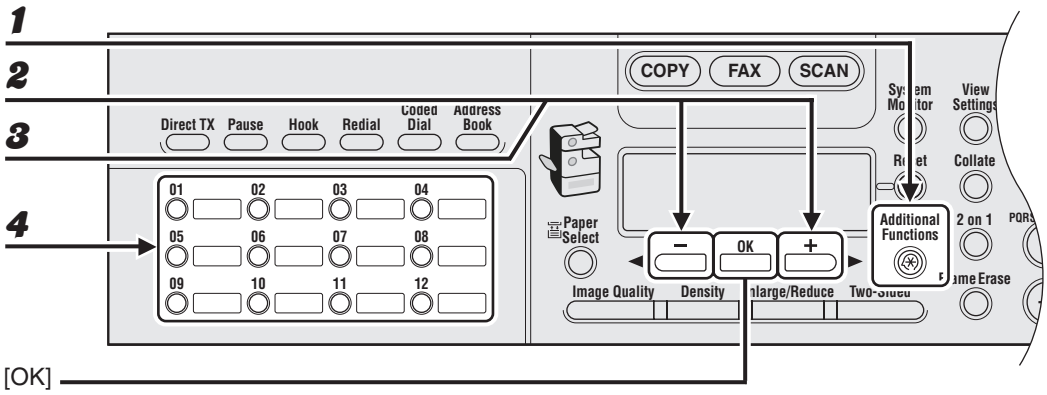

1 Press [Additional Functions].

2 Press [◄ –] or [+ ►] to select <ADDRESS BOOK SET.>, then press [OK].

3 Confirm that <1-TOUCH SPD DIAL> is displayed, then press [OK].

4 Press the one-touch speed dialing key (01 to 23) you want to edit, then press [OK].

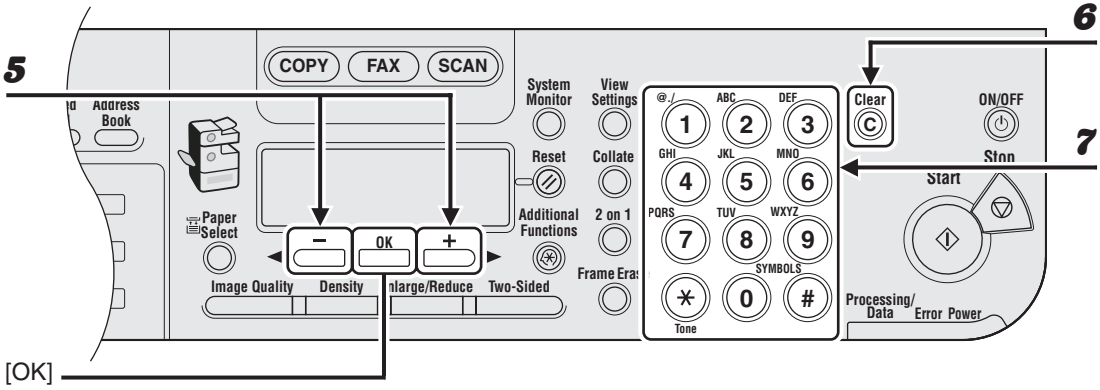

5 **Confirm that <TEL NUMBER ENTRY> is displayed, then press [OK].**

6 **Press [Clear] repeatedly to go back to a wrong digit.**

You can also use [◄ –].
To delete all the numbers, press and hold [Clear].

7 **Enter a new number with the numeric keys, then press [OK].**

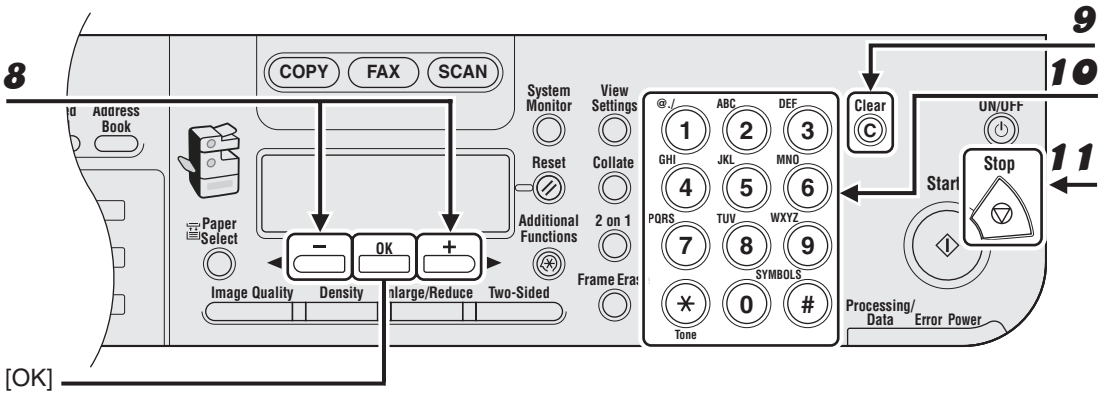

8 **Confirm that <NAME> is displayed, then press [OK].**

9 **Press [Clear] repeatedly to go back to a wrong character.**

You can also use [◄ −] to move the cursor to the wrong character, then press [Clear] to delete it. To delete the entire name, press and hold [Clear].

10 **Enter a new character with the numeric keys, then press [OK].**

11 **Press [Stop] to return to standby mode.**

● Deleting One-Touch Speed Dialing

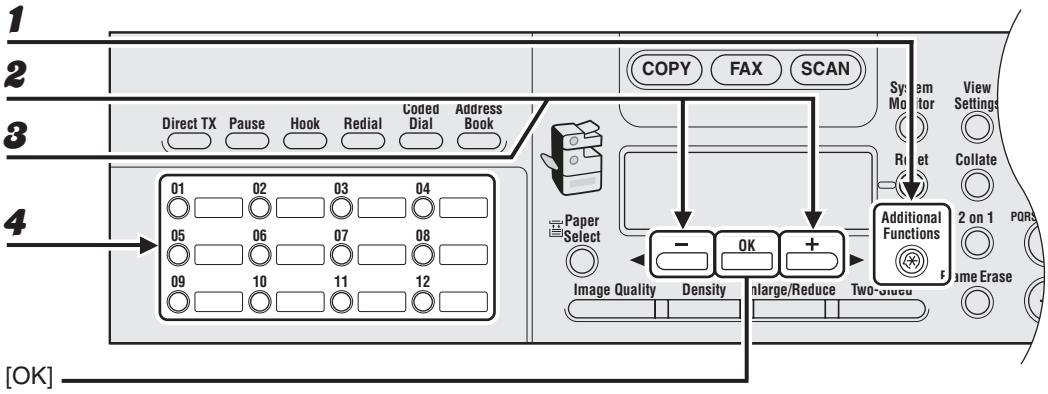

1 **Press [Additional Functions].**

2 **Press [◄ –] or [+ ►] to select <ADDRESS BOOK SET.>, then press [OK].**

3 **Confirm that <1-TOUCH SPD DIAL> is displayed, then press [OK].**

4 **Press the one-touch speed dialing key (01 to 23) you want to delete, then press [OK].**

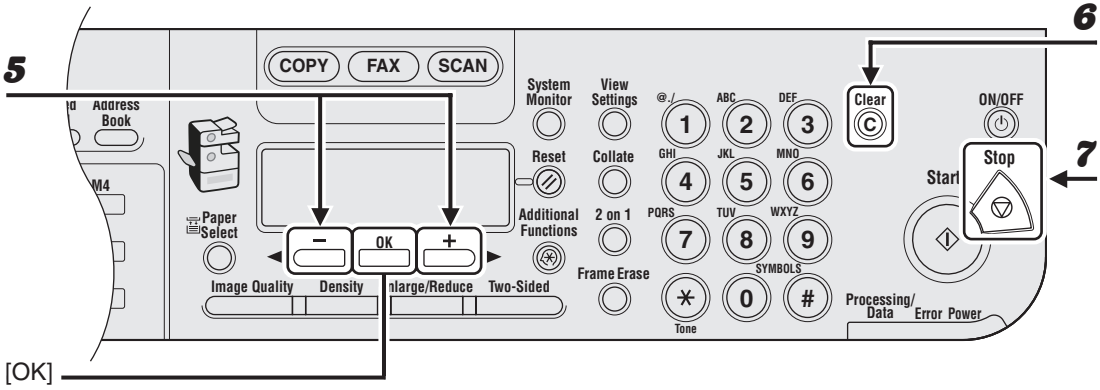

5 **Confirm that <TEL NUMBER ENTRY> is displayed, then press [OK].**

6 **Press and hold [Clear] to delete all the numbers, then press [OK].**

You can also use [◄ −] to delete numbers one by one.

7 **Press [Stop] to return to standby mode.**

NOTE

When deleting all numbers, the registered name is cleared automatically.

● Registering Coded Speed Dialing

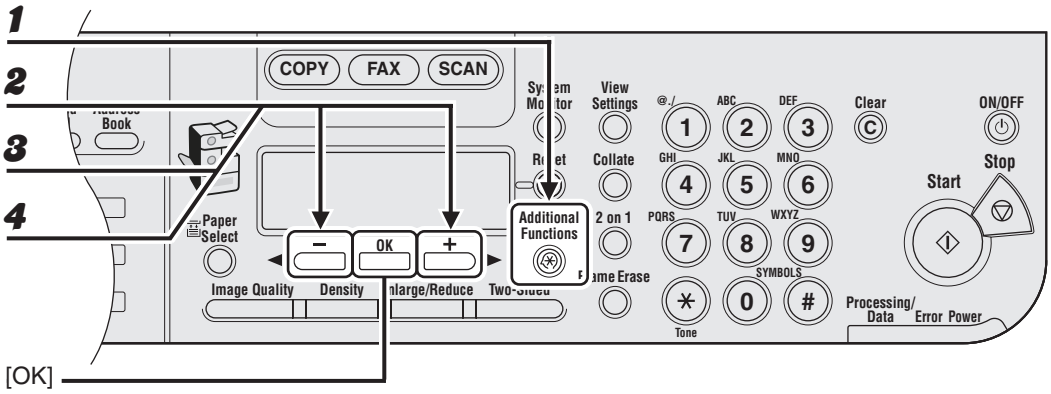

1 **Press [Additional Functions].**

2 **Press [◄ –] or [+ ►] to select <ADDRESS BOOK SET.>, then press [OK].**

3 **Press [◄ –] or [+ ►] to select <CODED SPD DIAL>, then press [OK].**

4 **Press [◄ –] or [+ ►] to select a coded speed dialing number (00 to 99), then press [OK].**

You can also enter a coded speed dialing number with the numeric keys after pressing [Coded Dial].

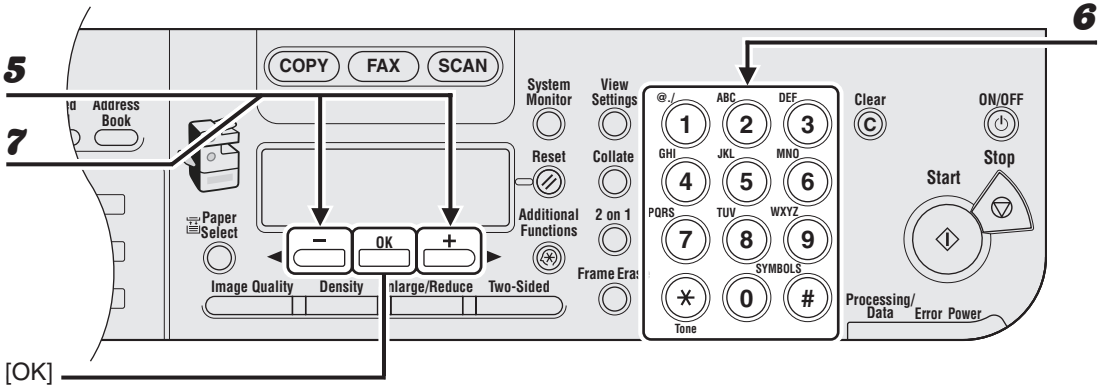

5 **Confirm that <TEL NUMBER ENTRY> is displayed, then press [OK].**

6 **Enter the fax number you register (max. 120 digits, including spaces and pauses) with the numeric keys, then press [OK].**

Ex.

```
TEL NUMBER ENTRY
012XXXXXXX_
```

7 **Confirm that <NAME> is displayed, then press [OK].**

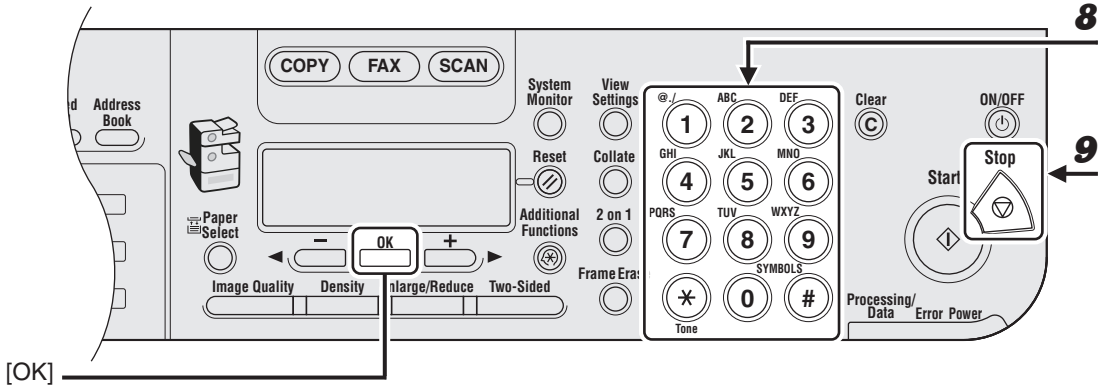

8 Enter the destination name (max. 16 letters, including spaces) with the numeric keys, then press [OK].

To register another coded speed dialing number, press [Additional Functions], then repeat the procedure from step 4.
You can set <OPTIONAL SETTING> for each destination. For details, see Chapter 1, “Advanced Fax Features,” in the Advanced Guide.

Ex.

```
NAME                    :A
CAN
```

9 Press [Stop] to return to standby mode.

● Editing Coded Speed Dialing

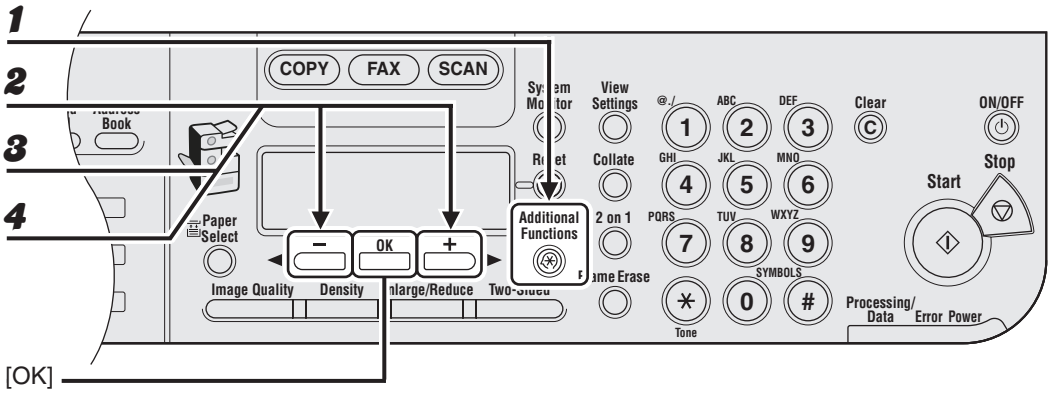

1 **Press [Additional Functions].**

2 **Press [◄ –] or [+ ►] to select <ADDRESS BOOK SET.>, then press [OK].**

3 **Press [◄ –] or [+ ►] to select <CODED SPD DIAL>, then press [OK].**

4 **Press [◄ –] or [+ ►] to select the coded speed dialing number (00 to 99) that you want to edit, then press [OK].**

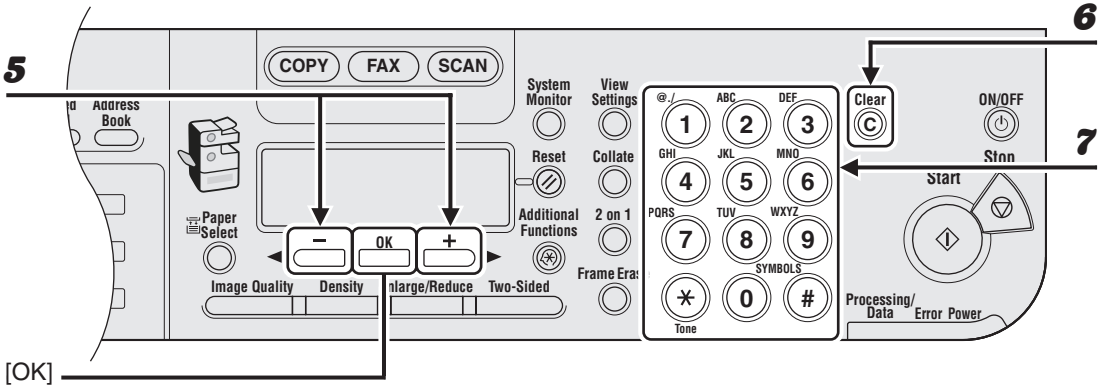

5 **Confirm that <TEL NUMBER ENTRY> is displayed, then press [OK].**

6 **Press [Clear] repeatedly to go back to the wrong digit.**

You can also use [◄ –].
To delete all the numbers, press and hold [Clear].

7 **Enter a new number with the numeric keys, then press [OK].**

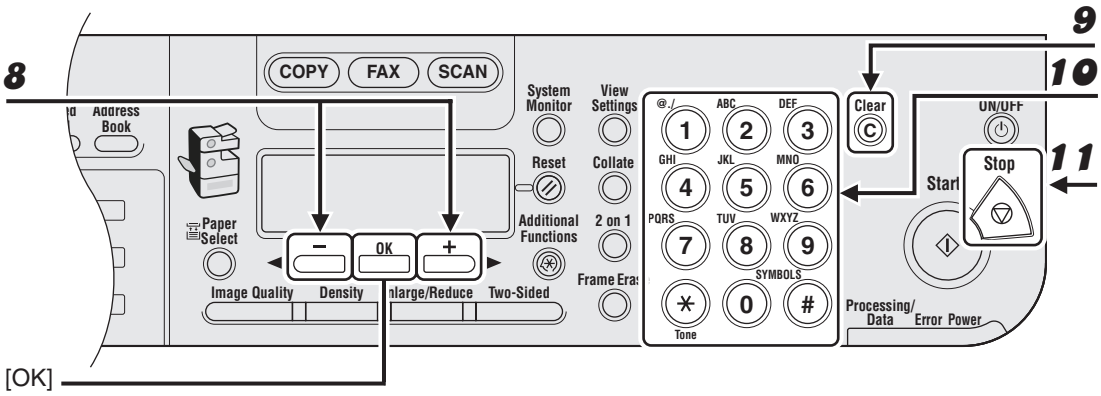

8 **Confirm that <NAME> is displayed, then press [OK].**

9 **Press [Clear] repeatedly to go back to a wrong character.**

You can also use [◄–] to move the cursor to the wrong character, then press [Clear] to delete it. To delete the entire name, press and hold [Clear].

10 **Enter a new character with the numeric keys, then press [OK].**

11 **Press [Stop] to return to standby mode.**

● Deleting Coded Speed Dialing

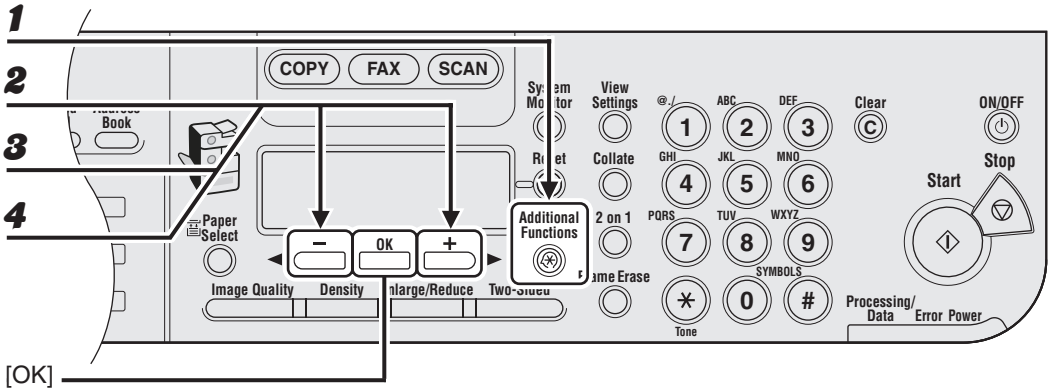

1 Press [Additional Functions].

2 Press [◄ –] or [+ ►] to select <ADDRESS BOOK SET.>, then press [OK].

3 Press [◄ –] or [+ ►] to select <CODED SPD DIAL>, then press [OK].

4 Press [◄ –] or [+ ►] to select the coded speed dialing number (00 to 99) that you want to delete, then press [OK].

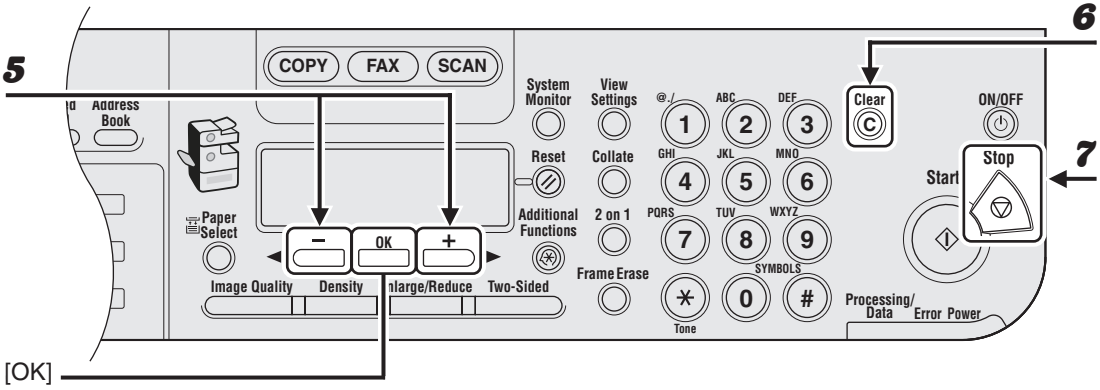

5 **Confirm that <TEL NUMBER ENTRY> is displayed, then press [OK].**

6 **Press and hold [Clear] to delete all the numbers, then press [OK].**

You can also use [◄ –] to delete numbers one by one.

7 **Press [Stop] to return to standby mode.**

NOTE

When deleting all numbers, the registered name is cleared automatically.

● Registering Group Dialing

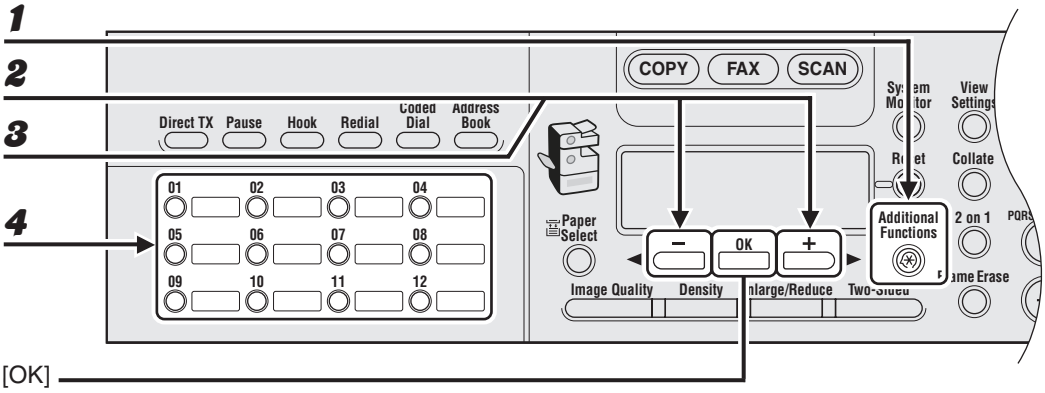

1 **Press [Additional Functions].**

2 **Press [◄ –] or [+ ►] to select <ADDRESS BOOK SET.>, then press [OK].**

3 **Press [◄ –] or [+ ►] to select <GROUP DIAL>, then press [OK].**

4 **Specify an empty one-touch speed dialing key or coded speed dialing number that you want to set as the group dial, then press [OK].**

For details on selecting a one-touch speed dialing key, see “Registering One-Touch Speed Dialing,” on p. 4-7.
For details on selecting a coded speed dialing number, see “Registering Coded Speed Dialing,” on p. 4-15.

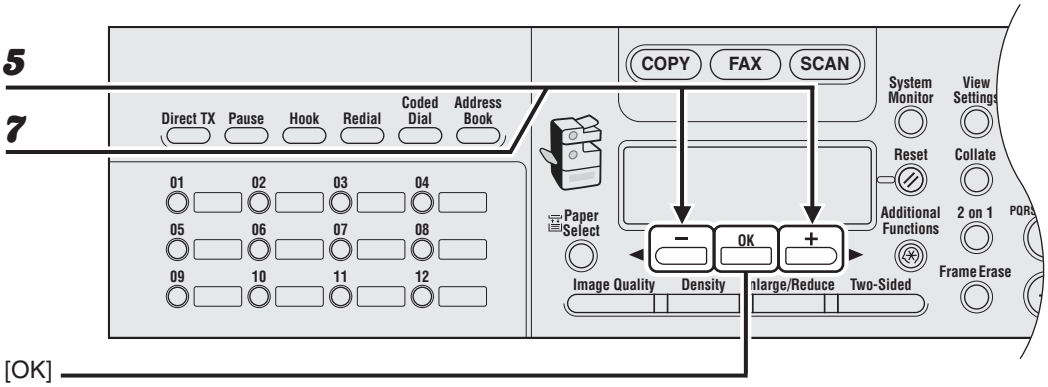

5 **Confirm that <TEL NUMBER ENTRY> is displayed, then press [OK].**

6 **Select the speed dialing numbers you want to register in the group (max. 122 destinations) until all destinations are registered, then press [OK].**

The speed dialing number refers to the one-touch dialing number or coded speed dialing number under which the fax/telephone number is registered.
To enter a number stored under a one-touch speed dialing key, press the desired one-touch speed dialing key(s).
To enter a number stored under a coded speed dialing number, press [Coded Dial], then enter the two-digit code for the number using the numeric keys. For multiple entries, press [Coded Dial] between each entry.

NOTE

You can review the destinations which has been already entered with [◄−] or [+►].

7 **Confirm that <NAME> is displayed, then press [OK].**

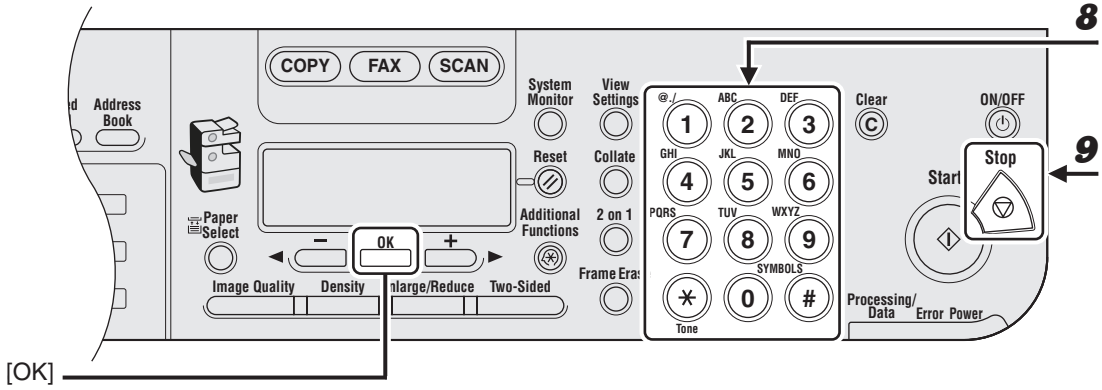

8 **Enter the group name (max. 16 letters, including spaces) with the numeric keys, then press [OK].**

Ex.

```
NAME                    :A
CANON GROUP
```

9 **Press [Stop] to return to standby mode.**

● Adding New Destination to Group

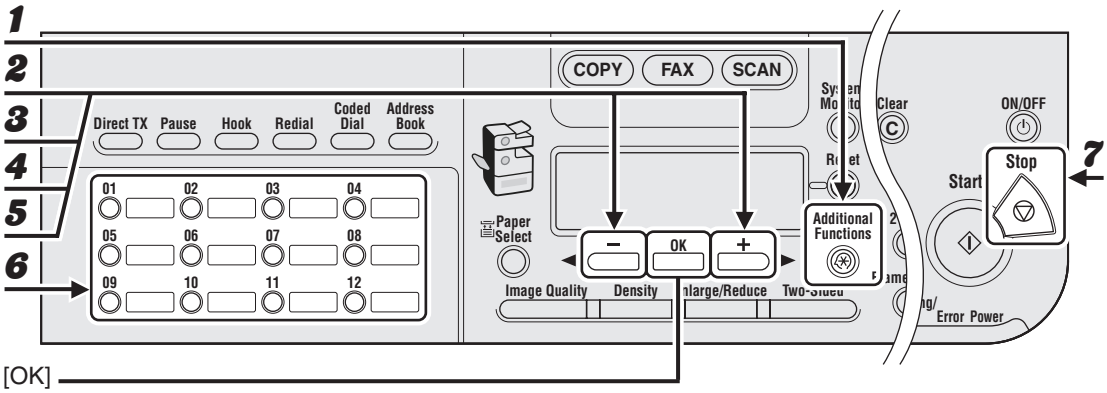

1 **Press [Additional Functions].**

2 **Press [◄ –] or [+ ►] to select <ADDRESS BOOK SET.>, then press [OK].**

3 **Press [◄ –] or [+ ►] to select <GROUP DIAL>, then press [OK].**

4 **Press [◄ –] or [+ ►] to select a group dial to edit, then press [OK].**

To select a group stored under the coded speed dialing number, press [Coded Dial], then enter the two-digit code using the numeric keys.

5 **Confirm that <TEL NUMBER ENTRY> is displayed, then press [OK].**

6 **Select the speed dialing number you want to add to the group, then press [OK].**

For details on entering the speed dialing number, see “Registering Group Dialing,” on p. 4-23.

7 **Press [Stop] to return to standby mode.**

● Deleting Destination from Group

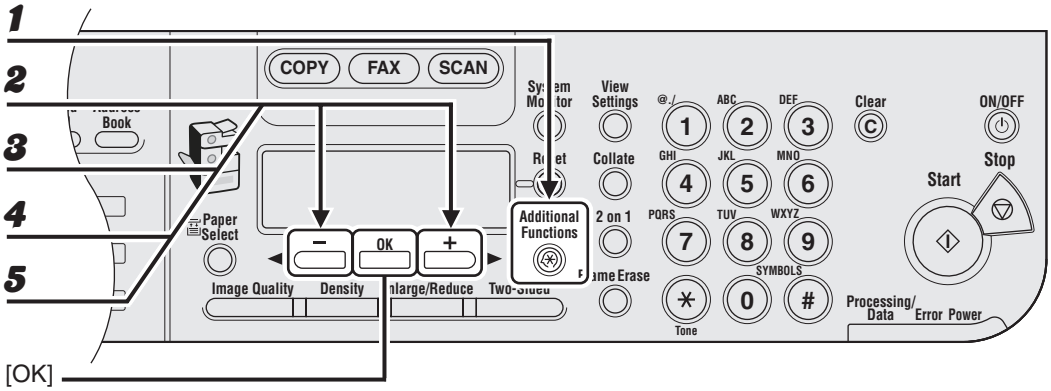

1 **Press [Additional Functions].**

2 **Press [◄ –] or [+ ►] to select <ADDRESS BOOK SET.>, then press [OK].**

3 **Press [◄ –] or [+ ►] to select <GROUP DIAL>, then press [OK].**

4 **Press [◄ –] or [+ ►] to select a group dial to edit, then press [OK].**

To select a group stored under the coded speed dialing number, press [Coded Dial], then enter the two-digit code using the numeric keys.

5 **Confirm that <TEL NUMBER ENTRY> is displayed, then press [OK].**

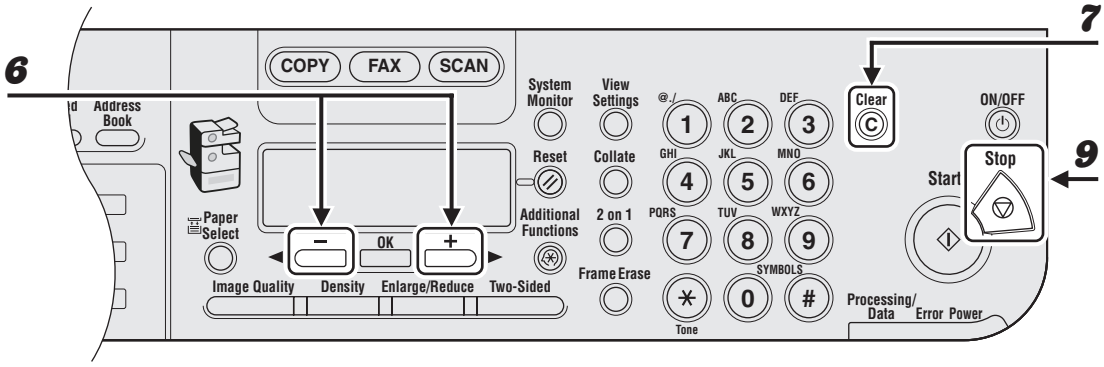

6 **Press [◄ –] or [+ ►] to display the speed dial number you want to delete from the group.**

7 **Press [Clear].**

8 **Repeat steps 6 and 7 if you want to delete another speed dialing number.**

9 **Press [Stop] to return to standby mode.**

● Changing Group Name

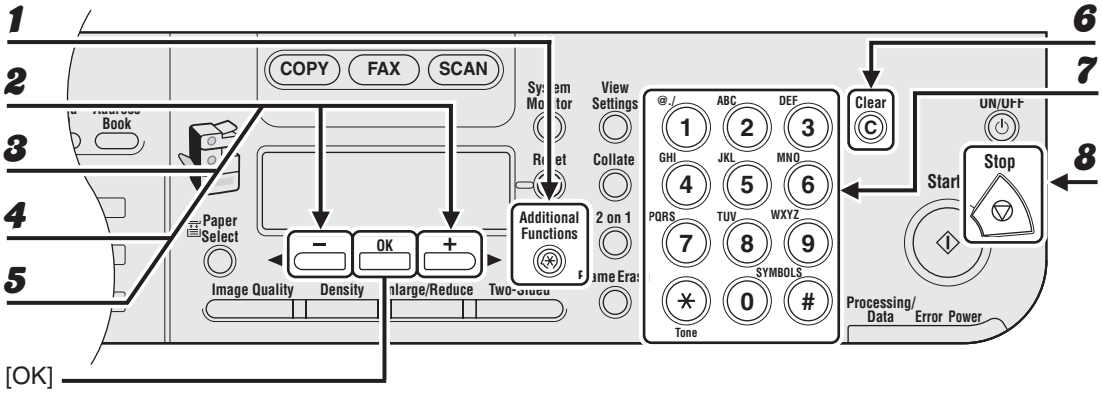

1 **Press [Additional Functions].**

2 **Press [◄ –] or [+ ►] to select <ADDRESS BOOK SET.>, then press [OK].**

3 **Press [◄ –] or [+ ►] to select <GROUP DIAL>, then press [OK].**

4 **Press [◄ –] or [+ ►] to select a group dial to edit, then press [OK].**

To select a group stored under the coded speed dialing number, press [Coded Dial], then enter the two-digit code using the numeric keys.

5 **Press [◄ –] or [+ ►] to select <NAME>, then press [OK].**

6 **Press [Clear] repeatedly to go back to a wrong character.**

You can also use [◄ –] to move the cursor to the wrong character, then press [Clear] to delete it. To delete the entire name, press and hold [Clear].

7 **Enter a new character with the numeric keys, then press [OK].**

8 **Press [Stop] to return to standby mode.**

● Deleting Group Dialing

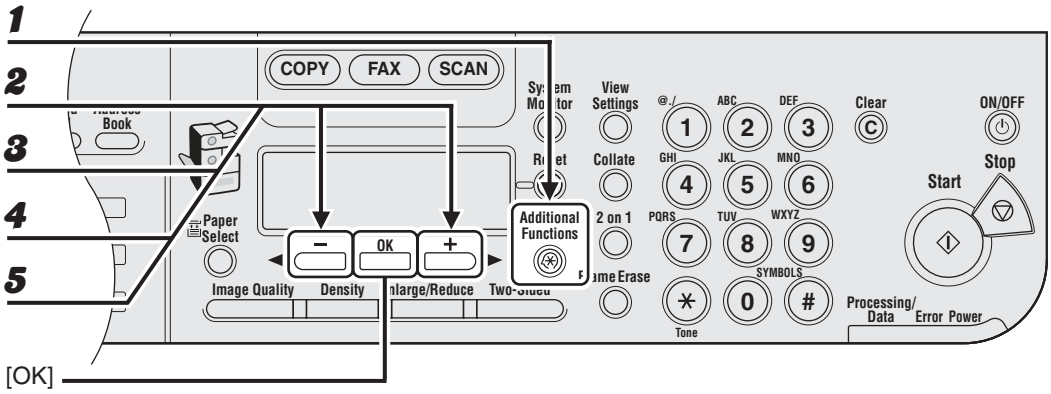

1 **Press [Additional Functions].**

2 **Press [◄ –] or [+ ►] to select <ADDRESS BOOK SET.>, then press [OK].**

3 **Press [◄ –] or [+ ►] to select <GROUP DIAL>, then press [OK].**

4 **Press [◄ –] or [+ ►] to select a group dial to delete, then press [OK].**

To select a group stored under the coded speed dialing number, press [Coded Dial], then enter the two-digit code using the numeric keys.

5 **Confirm that <TEL NUMBER ENTRY> is displayed, then press [OK].**

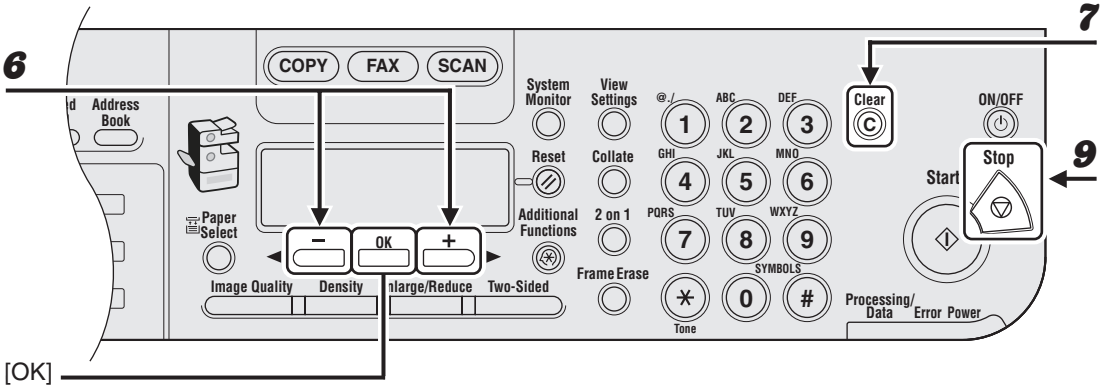

6 **Press [◄ –] or [+ ►] to display a speed dial number.**

7 **Press [Clear].**

8 **Repeat steps 6 and 7 until all speed dial numbers are deleted, then press [OK].**

9 **Press [Stop] to return to standby mode.**

NOTE

When deleting all numbers, the registered name is cleared automatically.

Using Speed Dialing

Follow the procedure below to send faxes to registered recipients using speed dialing. For easy reference, print out the list of recipients registered for speed dialing. (See “REPORT SETTINGS,” on p. 13-28.)

● Using One-Touch Speed/Group Dialing

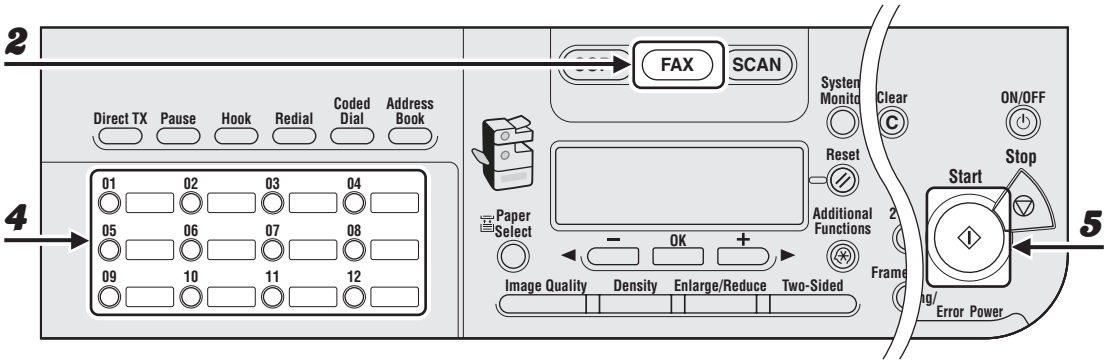

1 **Place the document on the platen glass or load it in the ADF.**

2 **Press [FAX].**

3 **Adjust any necessary settings for your document.**

For details, see “Scan Settings,” on p. 4-3.

4 **Press the desired one-touch speed or group dialing key (01 to 23).**

If you pressed a wrong key, press [Clear] and try again.

5 **Press [Start] to dial the number.**

When you set the documents on the platen glass, press [◄–] or [+►] to select the document size, then press [Start] for each document. When scanning is complete, press [OK] to start dialing.

● Using Coded Speed/Group Dialing

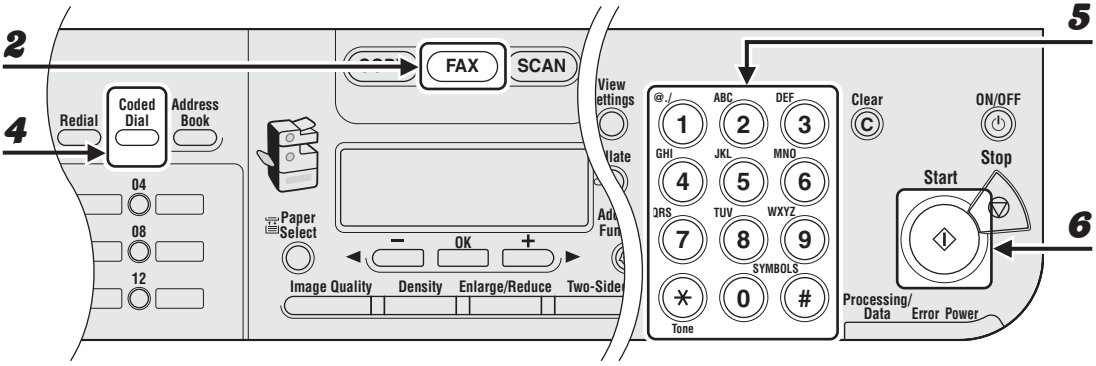

1 **Place the document on the platen glass or load it in the ADF.**

2 **Press [FAX].**

3 **Adjust any necessary settings for your document.**

For details, see “Scan Settings,” on p. 4-3.

4 **Press [Coded Dial].**

5 **Enter the desired two-digit code (00 to 99) with the numeric keys.**

Ex.

```
TEL=012XXXXXXX
[*01]CANON
```

If you entered a wrong code, press [Clear], then repeat the procedure from step 3.

6 **Press [Start] to dial the number.**

When you set the documents on the platen glass, press [◄–] or [+►] to select the document size, then press [Start] for each document. When scanning is complete, press [OK] to start dialing.

Manual Sending

Use manual sending when you want to talk to the recipient before sending a document, or if the recipient does not have a fax machine that can receive automatically.

NOTE

– You cannot use the platen glass for manual sending.
– You cannot use group dialing for manual sending.

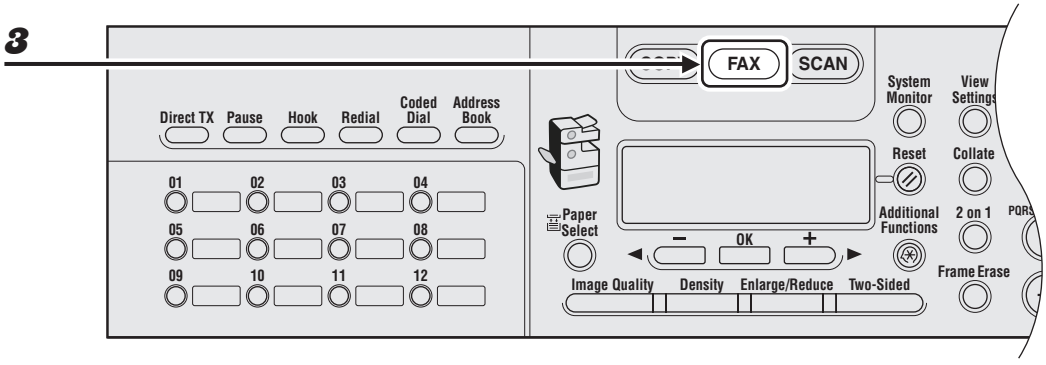

1 **Connect an external telephone to the machine if you want to talk to the recipient before sending a document.**

For details on how to connect an external telephone to the machine, see “Set Up the Machine,” in the Starter Guide.

2 **Load the document in the ADF.**

3 **Press [FAX].**

4 **Adjust any necessary settings for your document.**

For details, see “Scan Settings,” on p. 4-3.

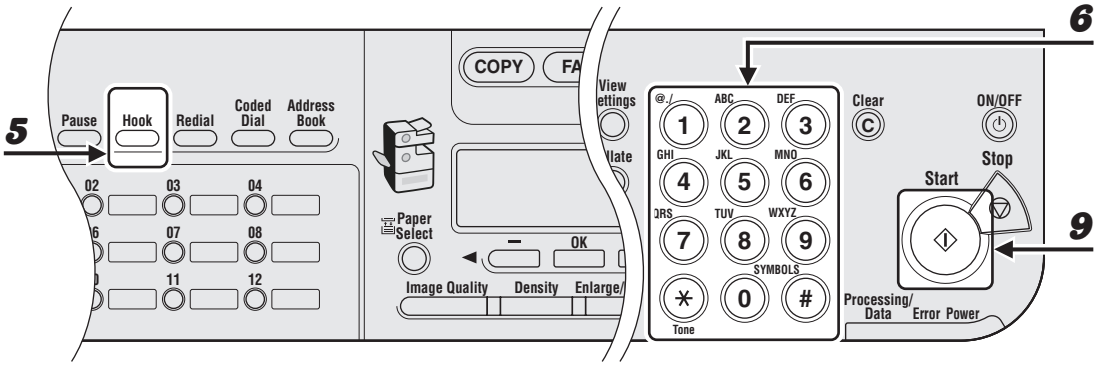

5 **Press [Hook] or pick up the handset of your external telephone.**

6 **Dial the recipient's fax/telephone number.**

NOTE

Make sure to confirm the dial tone before entering a fax number. If you enter the number before the dial tone can be heard, the call may not connect, or the wrong number may be dialed.

7 **Talk through the handset to the recipient.**

If you press [Hook] in step 5, you can pick up the handset when you hear the recipient's voice. If you hear a high-pitched signal instead of the recipient's voice, go to step 9.

8 **Ask the recipient to set their fax machine to receive faxes.**

9 **When you hear a high-pitched signal, press [Start], then hang up the handset.**

Direct Sending

With direct sending, the machine sends the document on the ADF as it scans one page, without storing all pages into memory at once. You can send a document ahead of other documents stored in memory.

NOTE

– You cannot use the platen glass for direct sending.
– You cannot use group dialing for direct sending.
– With direct sending, the machine scans one page into memory at once and sends it right away. Therefore, when <MEMORY FULL> is displayed, even if you have selected direct sending, wait until there is enough space in memory to scan one page, or delete the documents in memory, and try again. (See Chapter 5, “System Monitor,” in the Advanced Guide.)

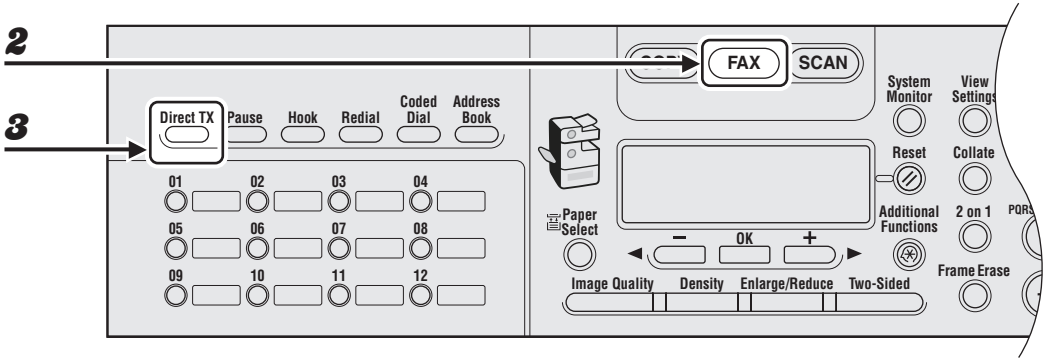

1 **Load the document in the ADF.**

2 **Press [FAX].**

3 **Press [Direct TX].**

To cancel direct sending, press [Direct TX] again.

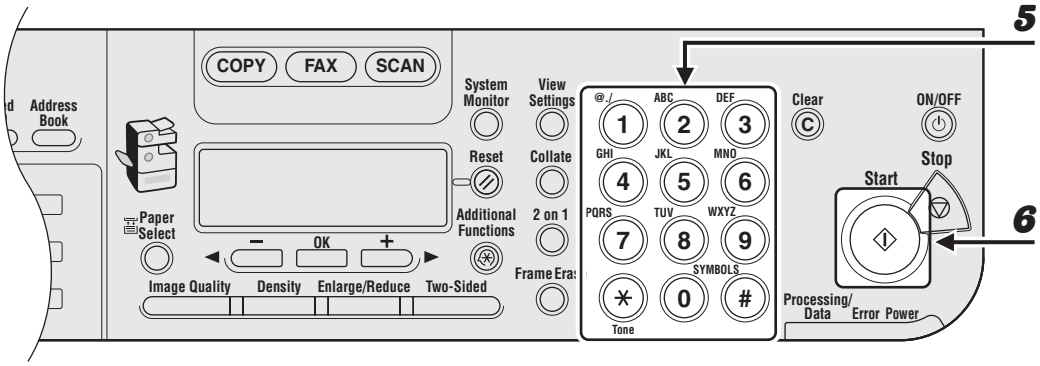

4 Adjust any necessary settings for your document.

For details, see “Scan Settings,” on p. 4-3.

5 Dial the recipient’s fax/telephone number.

If you select delayed transmission or sequential broadcasting, memory sending is automatically selected.

6 Press [Start].

Each page is sent as it is scanned.

NOTE

During transmission, <TRANSMITTING...> and the recipient’s fax/telephone number alternately appear as messages on the LCD display.

5 Receiving Faxes

(MF6550/MF6560/MF6580 Only)

Follow this procedure to set the machine for receiving faxes.
For advanced receiving features, see Chapter 1, “Advanced Fax Features,” in the Advanced Guide.

1 Enter the Setting Menu

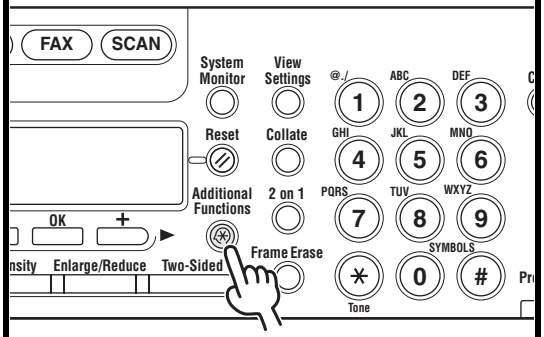

Press [Additional Functions].

2 Enter the Receive Mode

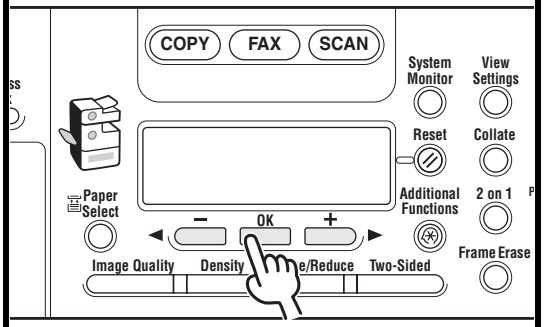

Select <FAX SETTINGS> with [◄ −] or [+ ►], then press [OK].

Confirm that <RX MODE> is displayed, then press [OK].

3 Select the Receive Mode

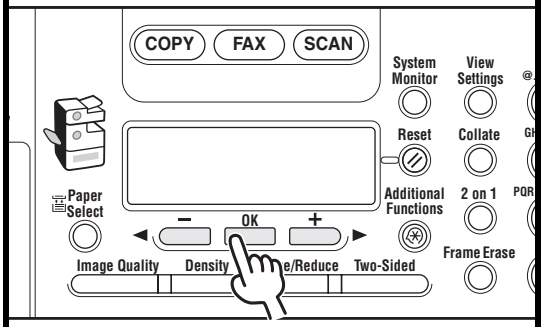

Select the receive mode with [◄ –] or [+ ►], then press [OK].

<FaxOnly>: Answers all calls as faxes.
<FaxTel>: Switches between fax and voice calls automatically.
<AnsMode>: Receives faxes automatically and records voice messages.
<DRPD>: Distinguishes between fax and voice calls, if you want to use an external telephone.
<Manual>: Does not answer any calls. You have to manually receive faxes.

NOTE

– For <AnsMode>, make sure an answering machine is connected to the machine.
– For <DRPD>, subscription to a DRPD service is required.

4 Exit the Setting Menu

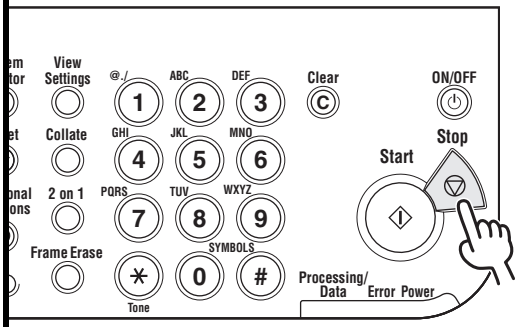

Press [Stop] to return to the standby display.

What if...

- **You want to cancel receiving:**
  Press [Stop] on the operation panel.

  When the <CANCEL DURING TX/RX?> message appears, select <YES> with [◄ –].

6 Copying

Follow this procedure to make a copy.
For advanced copying features, see Chapter 2, “Advanced Copy Features,” in the Advanced Guide.

1 Set a Document

Place the document on the platen glass or load it in the ADF.

For documents you can copy, see “Document Requirements,” on p. 2-1.

2 Enter the Copy Mode

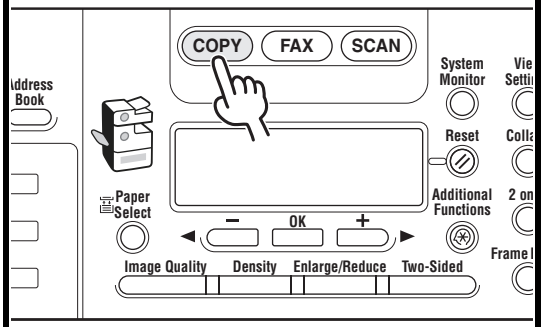

Press [COPY].

The COPY indicator lights and the machine enters copy standby mode.

What if...

- **You want to adjust the resolution and density:**
  See “Scan Settings,” on p. 6-3.

3 Enter the Copy Quantity

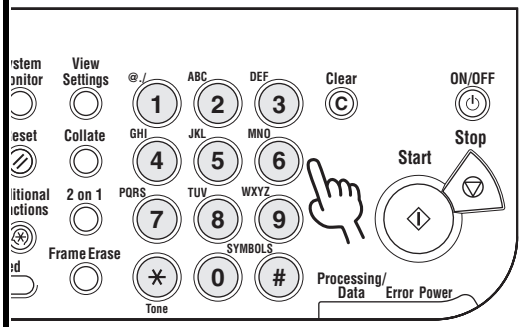

Enter the copy quantity (1 to 99) with the numeric key.

Ex.

```
100%          LTR
◁ A ▷ TEXT          03
```

What if...

- **You enter a wrong number:**
  Press [Clear], and enter a new number.

4 Start Copying

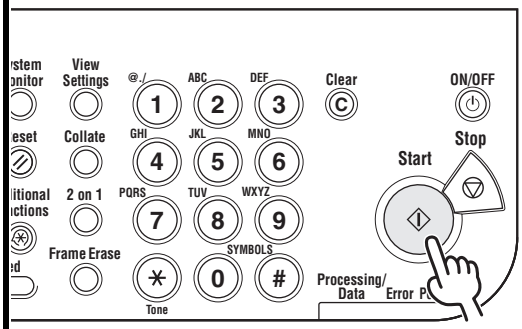

Press [Start].

What if...

- **You want to cancel copying:**
  Press [Stop] on the operation panel.

  When the <STOP KEY PRESSED> message appears, press [OK].

  When the <CANCEL COPYING?> message appears, press [◄ ━] to select <YES>.

Scan Settings

Before pressing [Start] to begin copying, you can adjust the settings to better suit the document to be scanned. These settings return to the default values if Auto Clear function is activated or if you press [Reset].

Image Quality

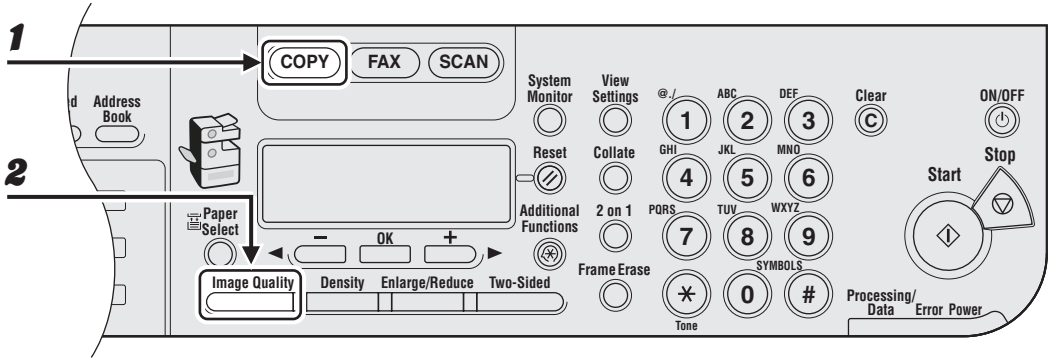

1 **Press [COPY].**

2 **Press [Image Quality] repeatedly to select the document type.**

<TEXT>: For text documents.
<PHOTO>: For documents that contain fine text or photos.
<TEXT/PHOTO>: For documents that contain text and photos.

NOTE

Copy density automatically changes to manual mode when <TEXT/PHOTO> or <PHOTO> is set.

Density

You can adjust the density to the most appropriate level for the document either automatically or manually.

● Adjusting Automatically

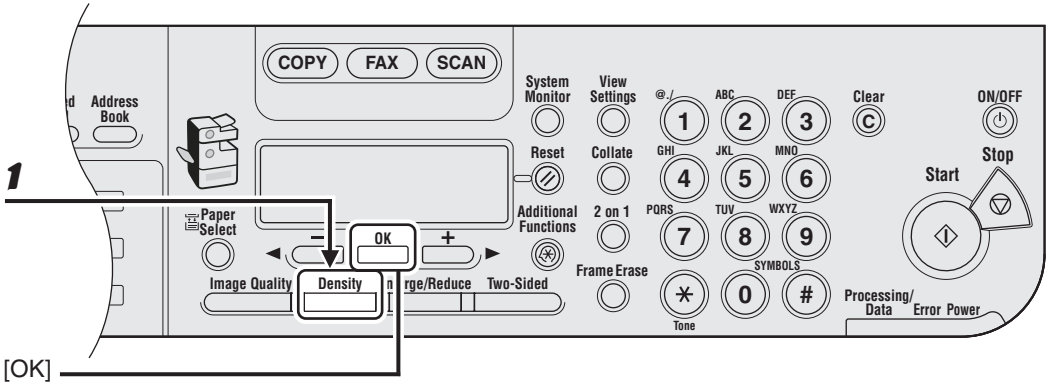

1 **Press [Density] to select <AUTO DENSITY>, then press [OK].**

NOTE

The image quality is automatically set to <TEXT>.

● Adjusting Manually

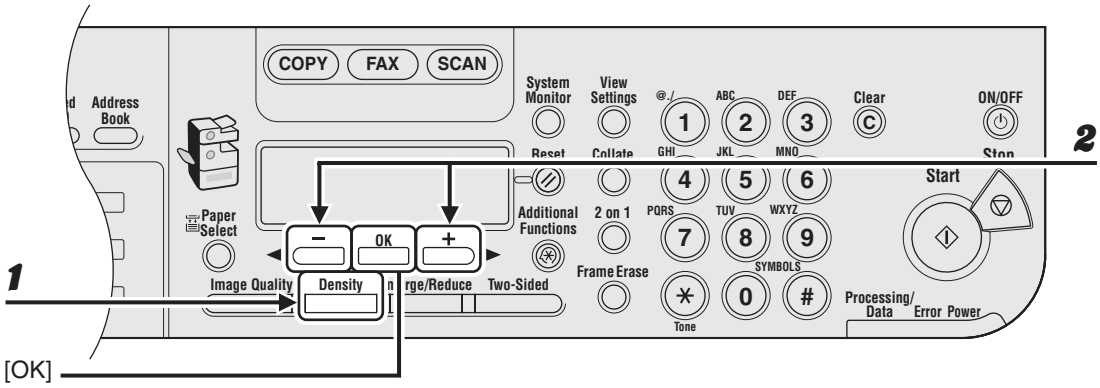

1 **Press [Density] twice to select the manual mode.**

2 **Press [◄ –] or [+ ►] to adjust the copy density, then press [OK].**

[+ ►]: to make light documents darker
[◄ –]: to make dark documents lighter

Zoom Ratio

● Preset Zoom

You can enlarge or reduce documents from one standard paper size to another.

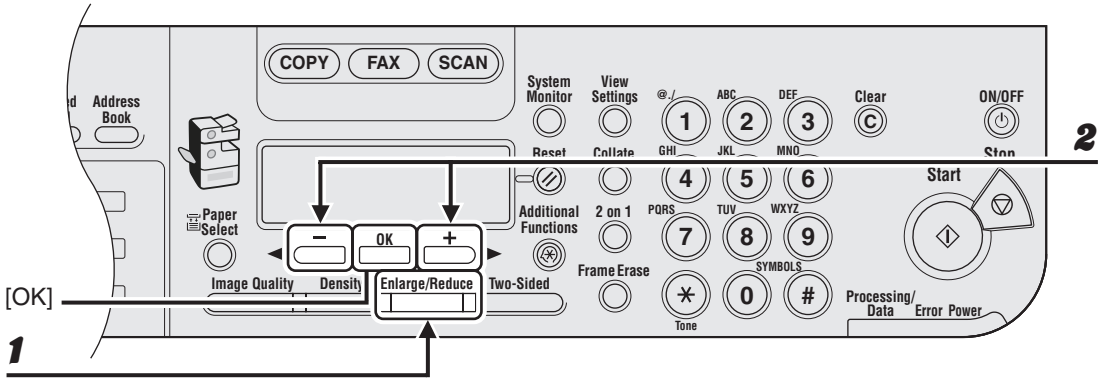

1 **Press [Enlarge/Reduce].**

2 **Press [◄ –] or [+ ►] to select the copy ratio, then press [OK].**

– 200% MAX.
– 129% STMT → LTR
– 100%
– 78% LGL → LTR
– 64% LTR → STMT
– 50% MIN.

NOTE

When <PAPER SIZE GROUP> in the <COPY SETTINGS> menu is set to <A> or <AB>, the preset copy ratios change as follows:
A: 50%, 70%, 100%, 141%, 200%
AB: 50%, 70%, 81%, 86%, 100%, 115%, 122%, 141%, 200%

● Zoom Designation

You can reduce or enlarge images by any copy ratio, in 1% increments*. The available copy ratios are from 50% to 200%.

* Not available for MF6531

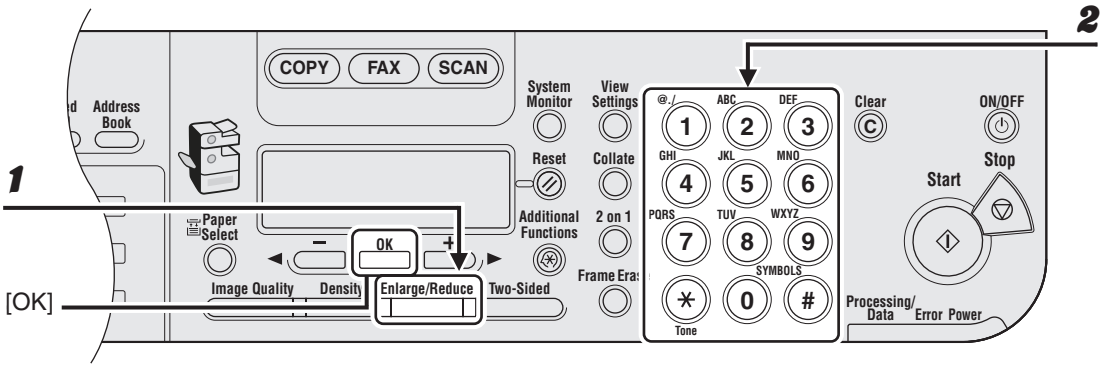

1 **Press [Enlarge/Reduce] twice.**

2 **Enter the copy ratio with the numeric keys, then press [OK].**

Ex.

```
ZOOM        50-200%
 -            80%      +
```

You can use [◄−] or [+►] to adjust the zoom ratio. To increase the zoom ratio, press [+►]. To decrease the copy ratio, press [◄−].

NOTE

To return the copy ratio to 100%, press [Enlarge/Reduce] repeatedly to display <DIRECT 100%>, then press [OK].

7 Printing

Follow this procedure to print a document from your computer.
Make sure that the printer driver is installed.
For details on printer driver settings, see online help.

1 Start the Print Command

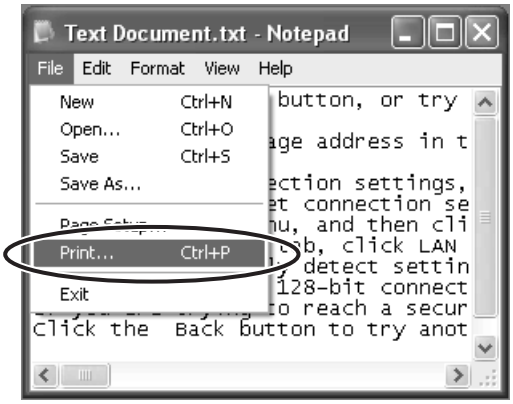

From an open document on an application, click [File] > [Print].

2 Select the Print Command

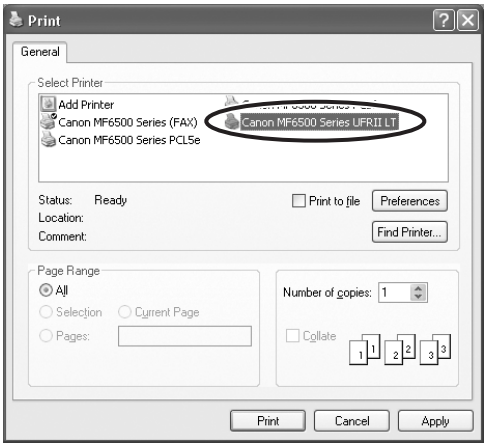

Select the printer icon for the machine ([Canon MF6500 Series UFRII LT], [Canon MF6500 Series PCL5e]*, or [Canon MF6500 Series PCL6]*).

* MF6560/MF6580 Only

3 Adjust Preferences

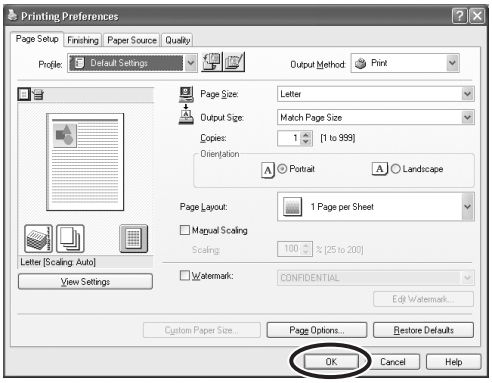

Click [Preferences] or [Properties] to open the dialog box. After finished, click [OK].

4 Print the Document

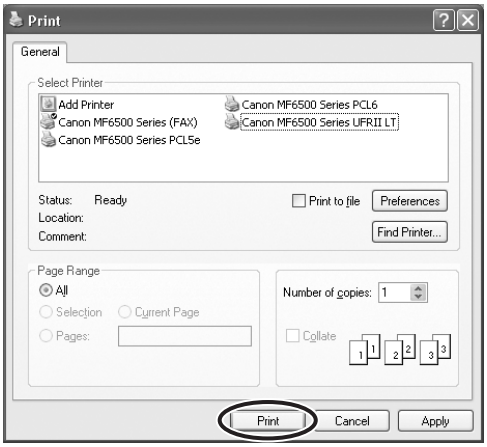

Click [Print] or [OK].

What if...

- **You want to cancel printing:**
  See Chapter 5, “System Monitor,” in the Advanced Guide.

8 Scanning

Follow this procedure to scan a document to your computer.
Make sure that the scanner driver is installed.
For details on scanner driver settings, see the Scanner Driver Guide (in the User Software CD).

1 Set a Document

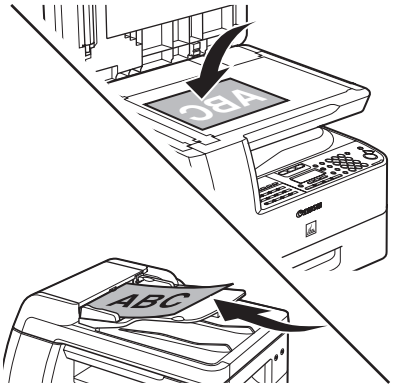

Place the document on the platen glass or load it in the ADF.

For documents you can scan, see “Document Requirements,” on p. 2-1.

2 Enter the Scan Mode

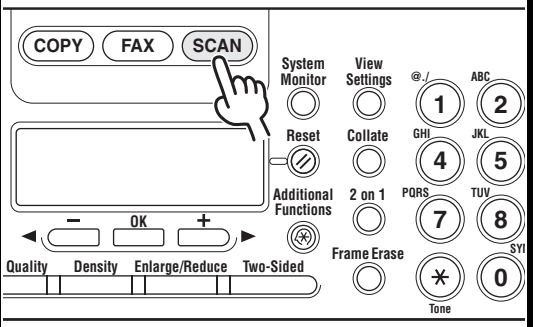

Press [SCAN].

The SCAN indicator lights up and the machine enters scan standby mode.

3 Set Scan Function

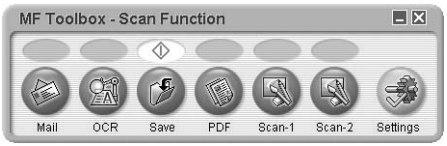

Start MF Toolbox, then set the scanning format.

The mark will be displayed above the button you select.

4 Start Scanning

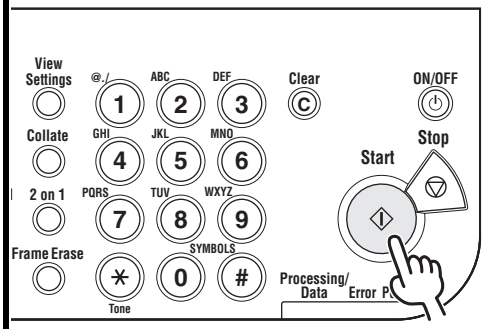

Press [Start].

What if...

- **You want to cancel scanning:**
  Press [Stop] on the operation panel, then click [OK] on the computer screen.

9 PC Faxing

(MF6550/MF6560/MF6580 Only)

Follow this procedure to send a fax from your computer.
Make sure that the fax driver is installed.
For details on fax driver settings, see online help.

1 Start the Print Command

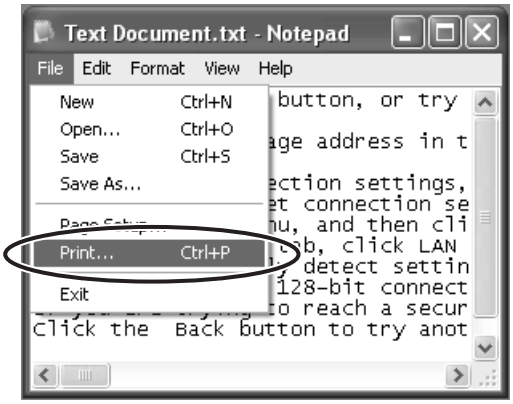

From an open document on an application, click [File] > [Print].

2 Select the Fax

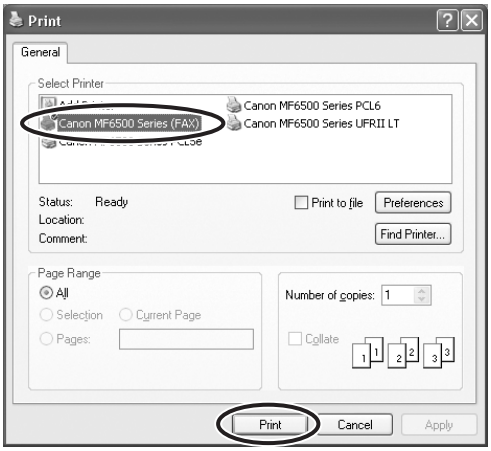

Select the fax icon ([Canon MF6500 Series (FAX)]), then click [Print] or [OK].

What if...

- **You want to adjust the fax properties:** Click [Preferences] or [Properties] and adjust the settings.

3 Set the Destination

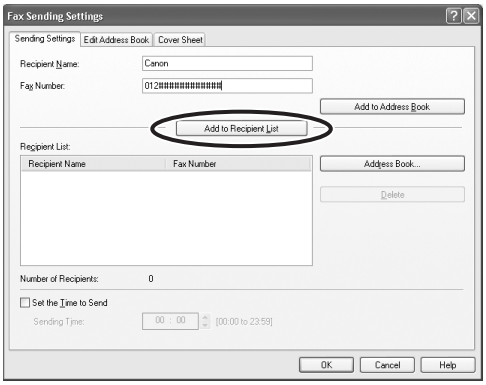

Specify the name and fax number in [Sending Settings], then click [Add to Recipient List].

What if...

- **You want to send a fax with a cover sheet:**
  Click the [Cover Sheet] tab and set the format for the cover sheet attachment.

4 Send the Document

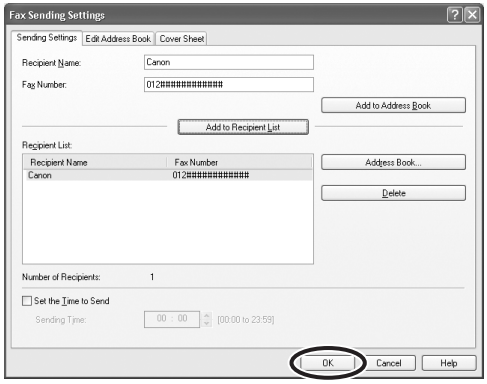

Click [OK] in the Fax Sending Settings.

What if...

- **You want to cancel sending a fax:**
  See Chapter 5, “System Monitor,” in the Advanced Guide.

10 Remote UI (MF6580 Only)

Follow this procedure for Remote UI management.
For details, see Chapter 4, “Remote UI,” in the Advanced Guide.

1 Prepare the Network

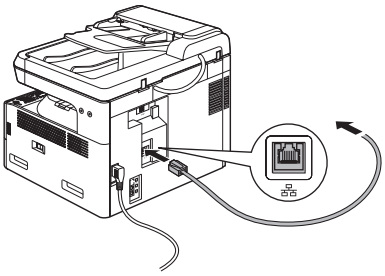

Set up the machine for use in a TCP/IP network, then connect the machine and the PC to your network router or a hub.

For details, see “Installing/Uninstalling Software,” in the Starter Guide.

2 Startup

Start the web browser, enter the IP address of the machine, then press [Enter] on the keyboard

3 Log on

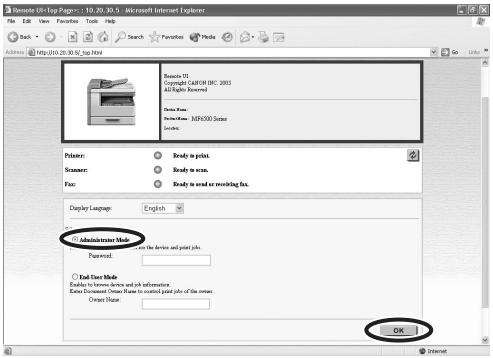

Select the user mode, then click [OK].

4 Operate the Machine

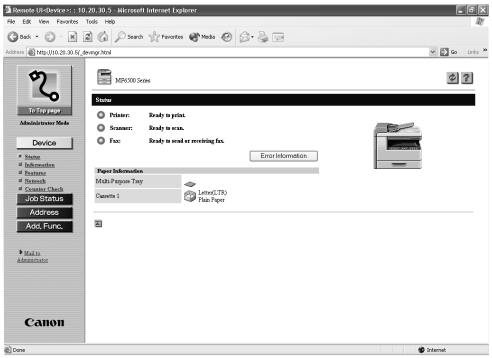

Now you can manage the machine on the web browser.

For details, see Chapter 4, “Remote UI,” in the Advanced Guide.

11 Maintenance

Cleaning the Machine

Note the following before cleaning your machine:

- **Make sure no document is stored in memory, then turn off the main power switch and disconnect the power cord.**
- **Use a soft cloth to avoid scratching the components.**
- **Do not use tissue paper, paper towels, or similar materials for cleaning; they can stick to the components or generate static charges.**

CAUTION

Never use volatile liquids such as thinners, benzene, acetone, or any other chemical cleaner to clean the machine. These can damage the machine components.

Exterior

1. **Turn off the main power switch and disconnect the power cord.**
2. **Wipe the machine's exterior with a clean, soft, lint-free cloth dampened with water or diluted dishwashing detergent solution.**
3. **Wait for the machine to dry, then reconnect the power cord and turn on the main power switch.**

Interior

Clean the machine's print area periodically to prevent toner powder and paper dust from accumulating inside.

1 **Turn off the main power switch and disconnect the power cord.**

2 **Open the left cover.**

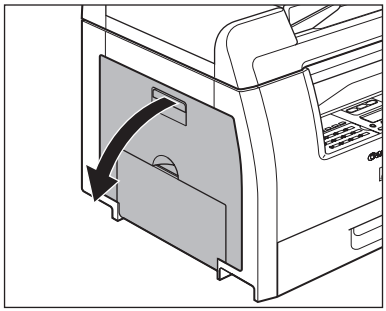

3 **Grasp the blue plastic pull tab (A) on the toner cartridge.**

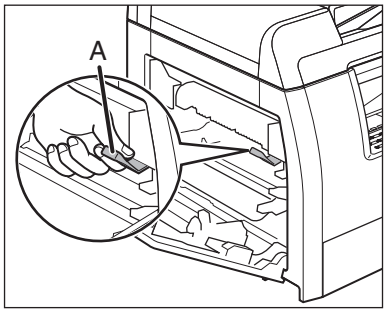

4 **Pull the blue plastic pull tab until you can easily hold the handle of the toner cartridge.**

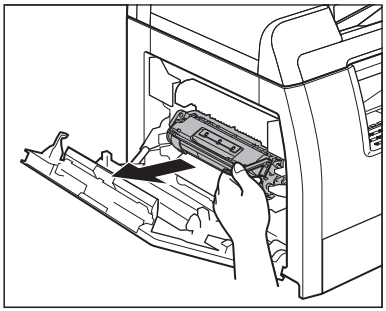

5 **Remove the toner cartridge.**

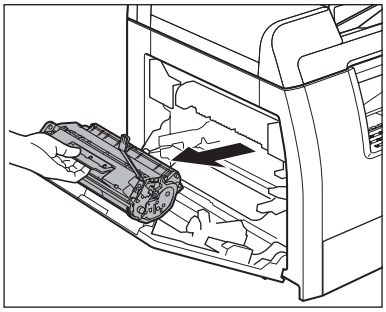

CAUTION

- Always hold the toner cartridge by its handle.
- To avoid exposing the toner cartridge to light, place it in its protective bag or wrap it in a thick cloth.
- Do not open the drum protective shutter on the toner cartridge. Print quality may deteriorate if the drum surface is exposed to light or is damaged.

6 Use a clean, soft, dry, lint-free cloth to remove any toner or paper debris from the machine's interior.

CAUTION

- Do not touch the fixing assembly (A) as it becomes very hot during use.
- Do not touch the transfer roller (B) as this can damage the machine.

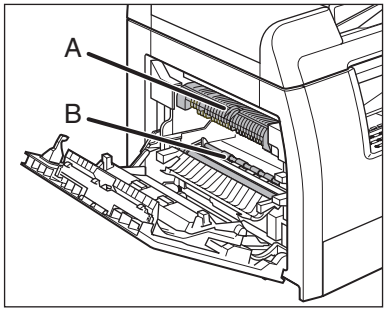

- If loose toner comes into contact with your skin or clothing, wash with cold water. Warm water will set the toner.

7 Hold the toner cartridge by its handle.

The arrows (A) on the toner cartridge should be pointing toward the machine.

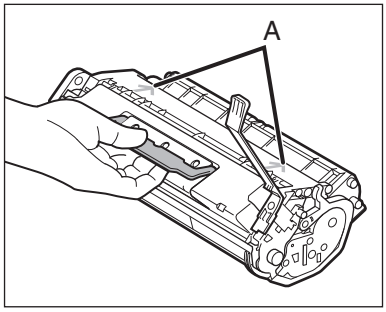

8 Insert the toner cartridge into the machine as far as it will go.

The left edge (A) and the right side protrusions (B, C) of the toner cartridge should be aligned with on the guides inside the machine.

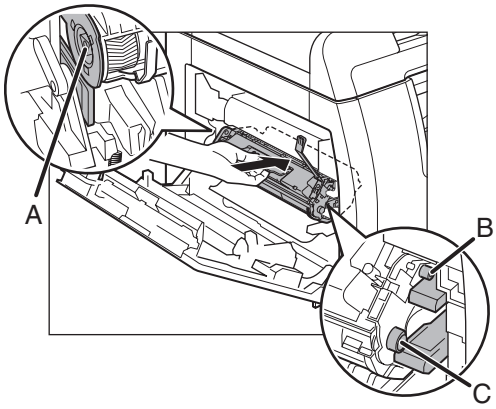

9 Push the toner cartridge to make sure it is properly set in the machine.

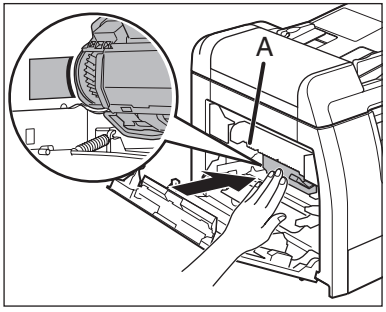

CAUTION

Do not touch the fixing assembly (A) as it becomes very hot during use.

10 **Close the left cover.**

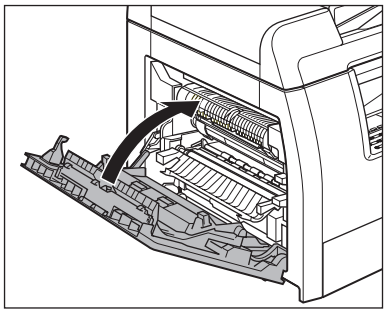

CAUTION

– Be careful not to get your fingers caught.
– If you cannot close the left cover, do not force it to close. Open the cover and make sure the toner cartridge is properly set in the machine.

11 **Reconnect the power cord and turn on the main power switch.**

Fuser Roller

If black streaks appear with printing, the fuser roller in the main unit may be dirty. Should this occur, clean the fusing roller in the following procedure. The roller should also be cleaned each time the toner cartridge is replaced. Load a sheet of blank LTR paper into the multi-purpose tray and start cleaning.

NOTE

Cleaning the roller takes approximately 100 seconds.

1 **Press [Additional Functions].**

2 **Press [◄ –] or [+ ►] to select <ADJUST./CLEANING>, then press [OK].**

3 **Open the multi-purpose tray.**

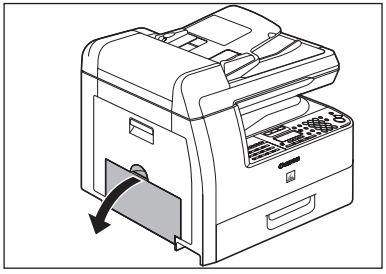

4 **Pull out the multi-purpose tray extension until it clicks, then open it.**

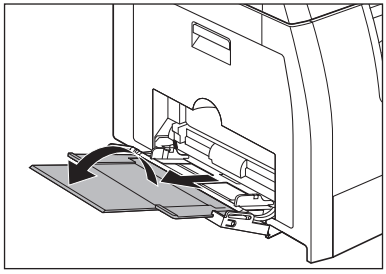

5 **Load a sheet of blank LTR paper.**

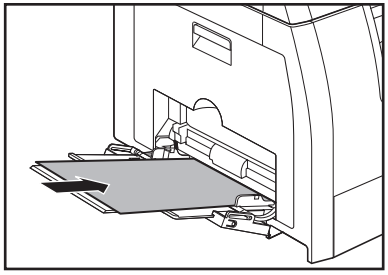

6 **Press [◄ –] or [+ ►] to select <FIX. UNIT CLEANING>, then press [OK].**

Cleaning starts. When finished, the display returns to standby mode.

NOTE

– Use standard paper as the cleaning paper.
– Throw away the cleaning paper after use.

Scanning area

Keep the scanning area clean to avoid dirty copies or faxes to be sent.

● Platen glass

1 **Open the platen glass cover.**

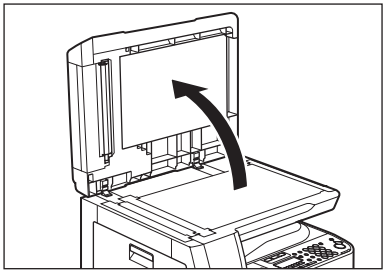

2 **Clean the platen glass and the underside of the platen glass cover with a cloth dampened with water. Then wipe the area with a soft, dry cloth.**

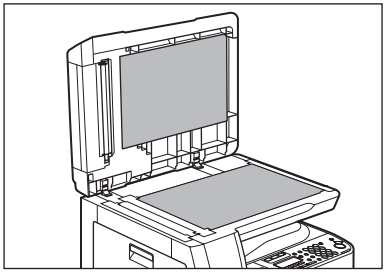

NOTE

Do not dampen the cloth too much, as this may tear the document or damage the machine.

3 **Close the platen glass cover.**

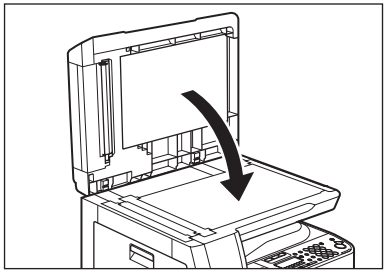

CAUTION

Be careful not to get your fingers caught.

● ADF

If your documents have black streaks or appear dirty after copying them using the ADF, this may be caused by pencil lead rubbing off the documents and onto the roller. Clean the ADF scanning area, film, and roller.

1 **Turn off the main power switch and disconnect the power cord.**

2 **Open the ADF.**

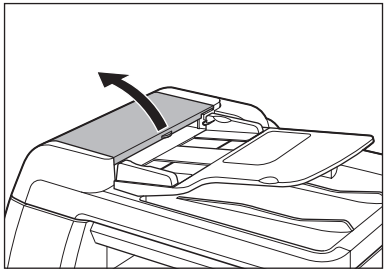

3 **Clean the rollers (A) inside the ADF with a cloth dampened with water. Then wipe the area with a soft, dry cloth.**

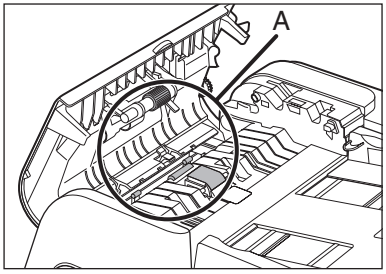

NOTE

Do not dampen the cloth too much, as this may tear the document or damage the machine.

4 **Lift the document feeder tray.**

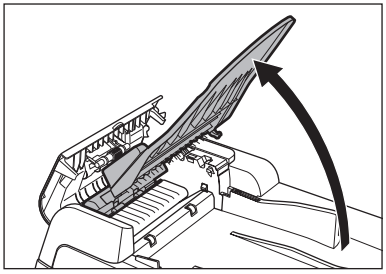

5 **Clean the rollers (B) below the document feeder tray with a cloth dampened with water. Then wipe the area with a soft, dry cloth.**

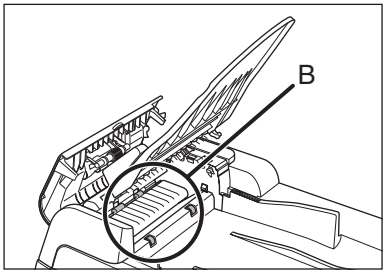

6 Lower the document feeder tray.

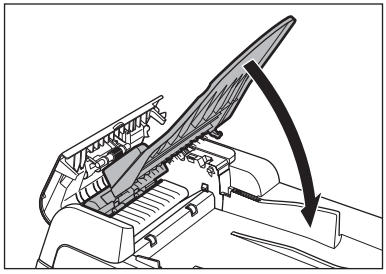

CAUTION

Be careful not to get your fingers caught.

7 Close the ADF.

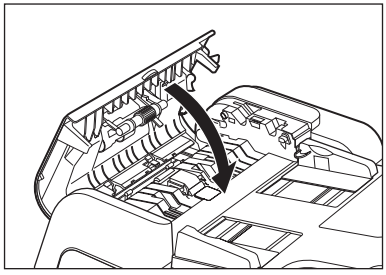

CAUTION

Be careful not to get your fingers caught.

8 Open the platen glass cover.

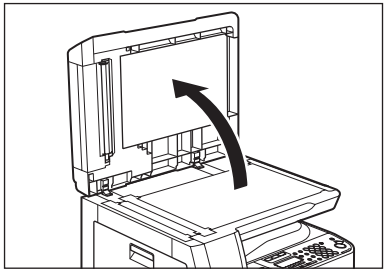

9 Clean the ADF scanning area (on the left side of the platen glass) and the document feeding roller with a cloth dampened with water. Then wipe the area with a soft, dry cloth.

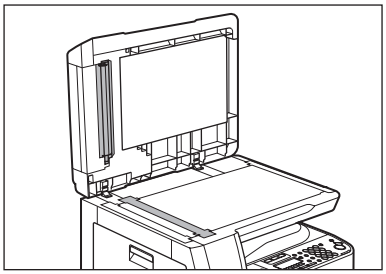

10 Close the platen glass cover.

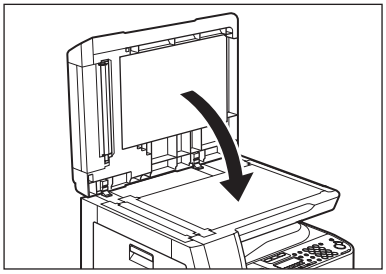

CAUTION

Be careful not to get your fingers caught.

11 Reconnect the power cord and turn on the main power switch.

Cleaning the ADF Automatically

If your documents have black streaks or appear dirty after scanning them through the ADF, clean the ADF roller by repeatedly feeding blank sheets of paper through it.

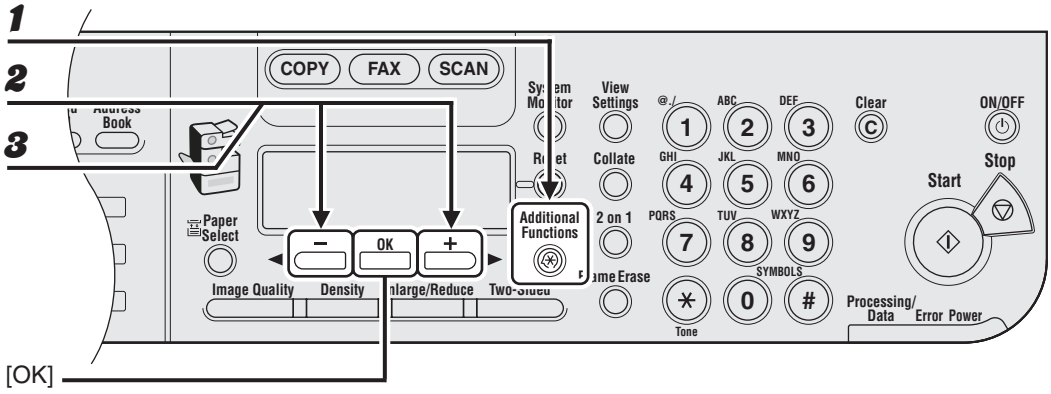

1 **Press [Additional Functions].**

2 **Press [◄ –] or [+ ►] to select <ADJUST./CLEANING>, then press [OK].**

3 **Press [◄ –] or [+ ►] to select <FEEDER CLEANING>, then press [OK].**

4 **Load 5 sheets of blank paper into the ADF, then press [OK].**

ADF cleaning starts. When finished, the display returns to standby mode.

NOTE

Use LTR paper.

Transcription Roller

If the back of the paper is smudged after printing, the transcription roller may be dirty. Clean the transcription roller in the following procedure.

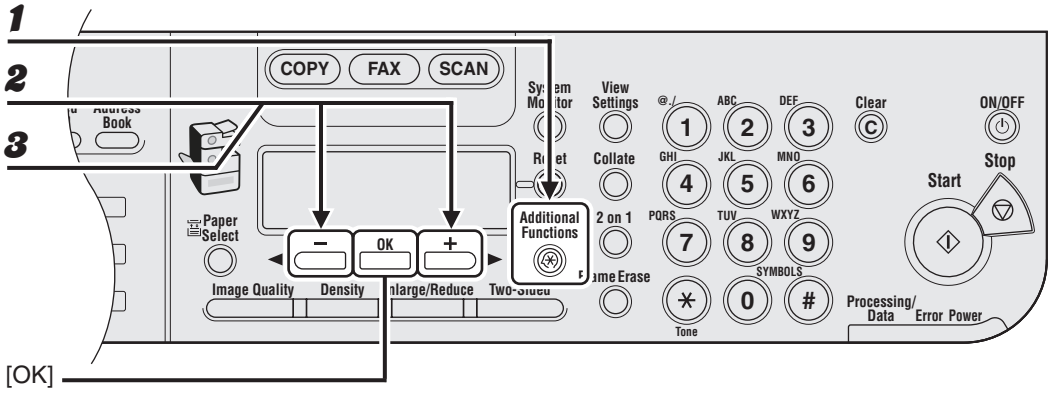

1 **Press [Additional Functions].**

2 **Press [◄ –] or [+ ►] to select <ADJUST./CLEANING>, then press [OK].**

3 **Confirm that <TRANS. ROLR CLEAN> is displayed, then press [OK].**

Cleaning starts. When finished, the display returns to standby mode.

Replacing the Toner Cartridge

When the LCD displays <TONER LOW/ PREPARE NEW TONER>, redistribute toner in the toner cartridge. If the message persists, replace the toner cartridge.

Redistributing Toner

1 **Open the left cover.**

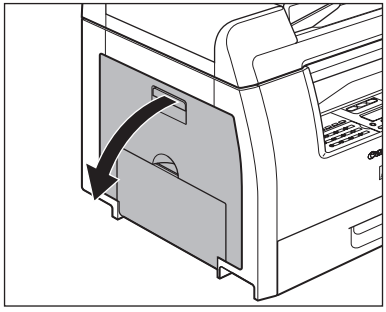

2 **Grasp the blue plastic pull tab (A) on the toner cartridge.**

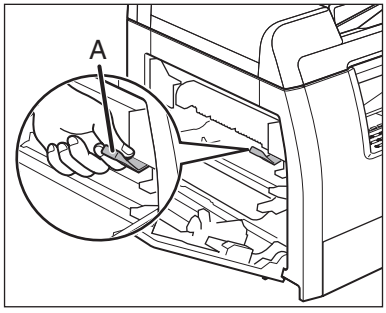

3 **Pull the blue plastic pull tab until you can easily hold the handle of the toner cartridge.**

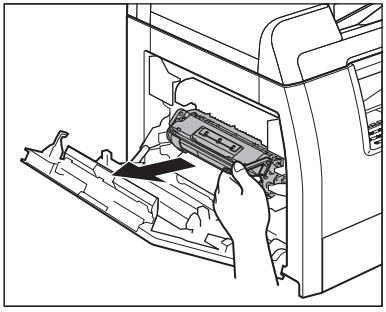

4 **Remove the toner cartridge.**

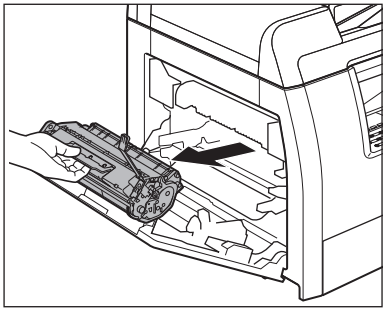

CAUTION

- Always hold the toner cartridge by its handle.
- Do not open the drum protective shutter on the toner cartridge. Print quality may deteriorate if the drum surface is exposed to light or is damaged.

5 Gently rock the toner cartridge 5 or 6 times to distribute toner evenly.

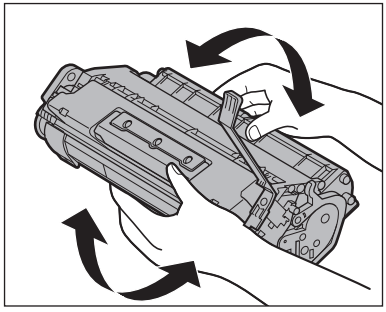

6 Hold the toner cartridge by its handle.

The arrows (A) on the toner cartridge should be pointing toward the machine.

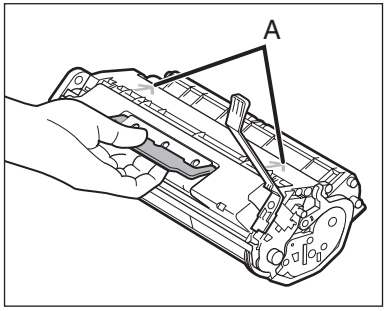

7 Insert the toner cartridge into the machine as far as it will go.

The left edge (A) and the right side protrusions (B, C) of the toner cartridge should be aligned with the guides inside the machine.

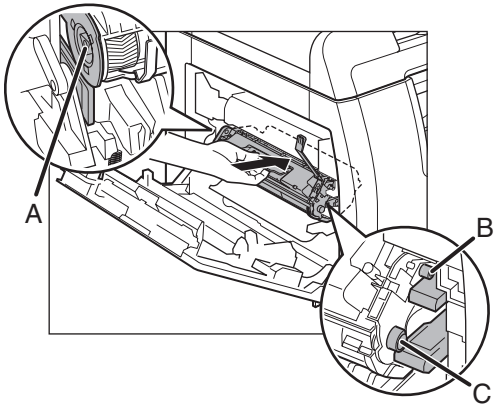

8 Push the toner cartridge to make sure it is properly set in the machine.

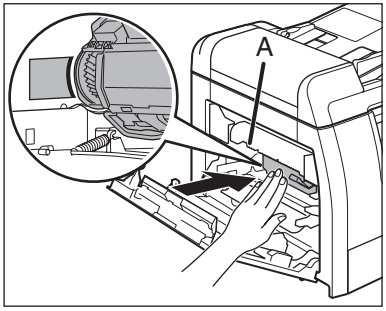

CAUTION

Do not touch the fixing assembly (A) as it becomes very hot during use.

9 **Close the left cover.**

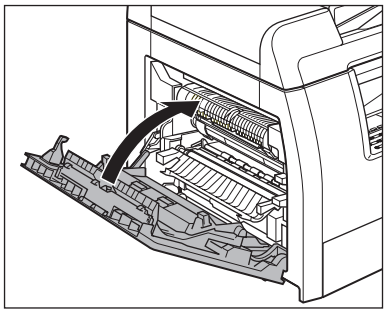

CAUTION

– Be careful not to get your fingers caught.
– If you cannot close the left cover, do not force it to close. Open the cover and make sure the toner cartridge is properly set in the machine.

Replacing the Toner Cartridge

1 **Open the left cover.**

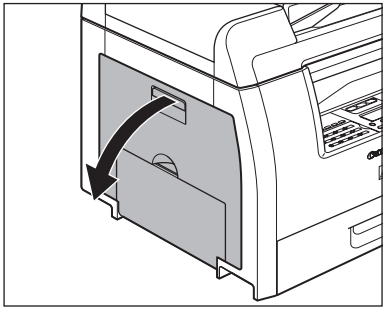

2 **Grasp the blue plastic pull tab (A) on the toner cartridge.**

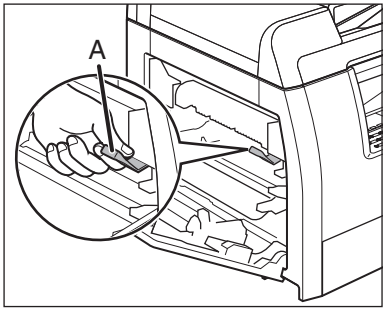

3 **Pull the blue plastic pull tab until you can easily hold the handle of the toner cartridge.**

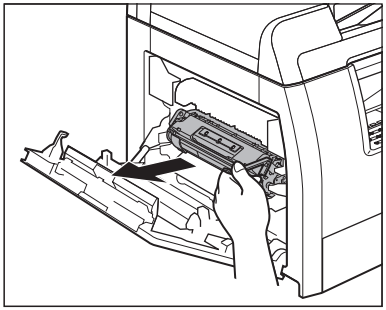

4 Remove the toner cartridge.

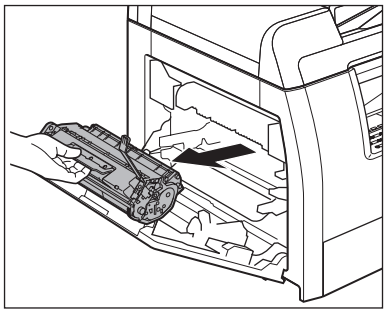

CAUTION

- Always hold the toner cartridge by its handle.
- Do not open the drum protective shutter on the toner cartridge. Print quality may deteriorate if the drum surface is exposed to light or is damaged.

5 Remove the new toner cartridge from the protective material.

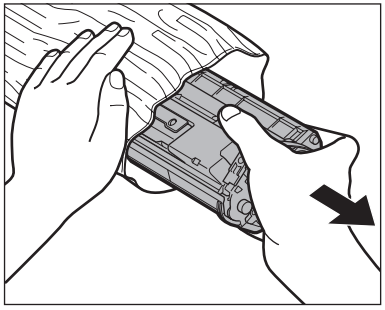

6 Gently rock the toner cartridge 5 or 6 times to distribute toner evenly.

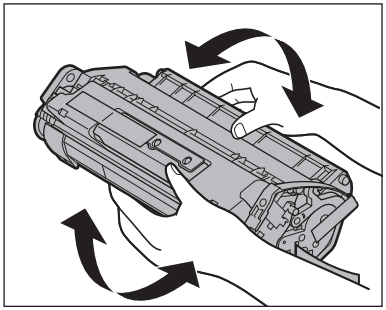

7 Remove the seals (2 places).

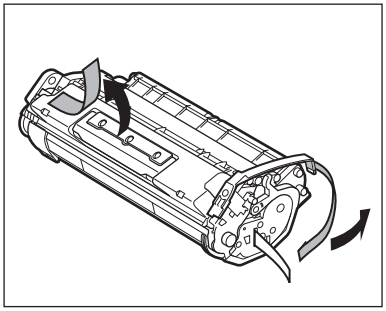

8 Raise the blue plastic pull tab.

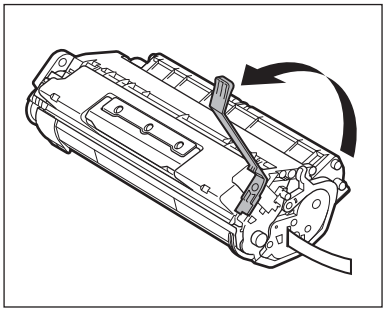

9 Pull out the seal completely.

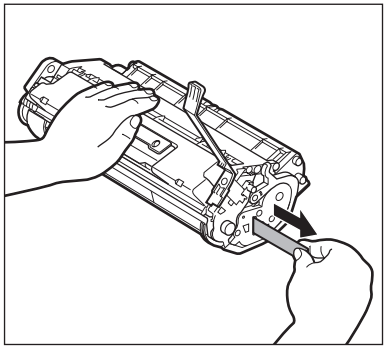

NOTE

Do not pull out the seal at an angle.

10 Hold the toner cartridge by its handle.

The arrows (A) on the toner cartridge should be pointing toward the machine.

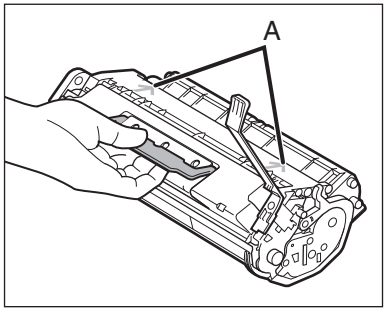

11 Insert the toner cartridge into the machine as far as it will go.

The left edge (A) and the right side protrusions (B, C) of the toner cartridge should be aligned with the guides inside the machine.

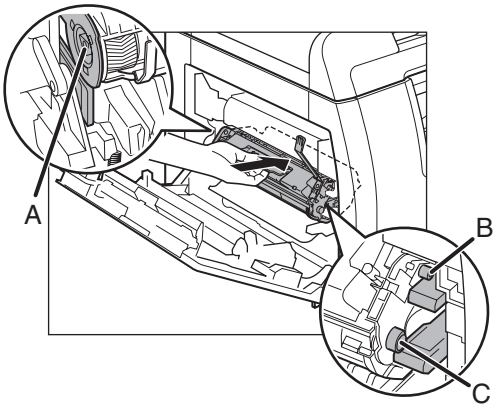

12 Push the toner cartridge to make sure it is properly set in the machine.

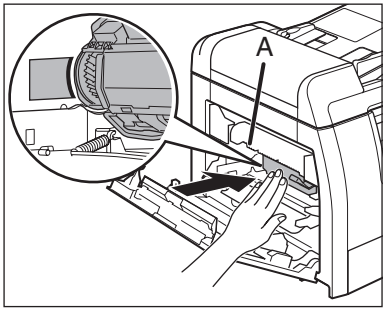

CAUTION

Do not touch the fixing assembly (A) as it becomes very hot during use.

13 Close the left cover.

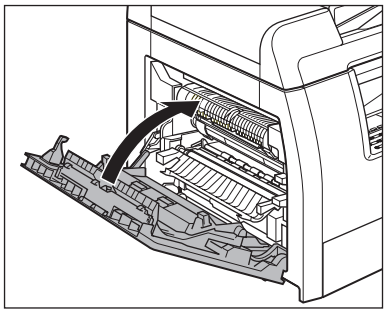

CAUTION

– Be careful not to get your fingers caught.
– If you cannot close the left cover, do not force it to close. Open the cover and make sure the toner cartridge is properly set in the machine.

Recycling Used Cartridges

Canon has instituted a worldwide recycling program for cartridges called “The Clean Earth Campaign.” This program preserves precious natural resources by utilizing a variety of materials found in the used cartridges that are of no further use, to remanufacture new cartridges which, at the same time, keeps the environment cleaner by reducing landfill waste. Complete details concerning this program are enclosed in each PC Cartridge box.

The Clean Earth Campaign

● THE Canon CARTRIDGE RECYCLING PROGRAM

The Canon Cartridge Recycling Program fulfills the first initiative of Canon’s Clean Earth Campaign, which supports four critical environmental areas:

- Recycling in the Workplace
- Conserving Environmental Resources
- Scientific Research and Education
- Encouraging Outdoors Appreciation

The remaining “Clean Earth” initiatives are supported in the U.S. through sponsorships of the National Park Foundation, the National Wildlife Federation, and The Nature Conservancy and in Canada through donations to the World Wildlife Fund Canada and The Nature Conservancy of Canada.

Since its inception, The Canon Cartridge Recycling Program has collected millions of cartridges that otherwise would have been discarded into landfills or similar facilities. Instead, this rapidly growing program returns used cartridges to the manufacturing process, thus conserving an array of resources.

Becoming a part of this worthwhile program is easy. When your cartridge is of no further use, simply follow the instructions detailed for U.S. or Canadian residents. We appreciate your support of The Canon Cartridge Recycling Program. Working together we can make a significant contribution to a cleaner planet.

- Cartridges collected through this program are not refilled.
- You are not entitled to a tax deduction or rebate for the return of empty cartridges.
- This program may be modified or discontinued without notice.

U.S.A. PROGRAM

● Packaging

■ Option A-1: Single Box Return

- Repackage the empty cartridge utilizing the wrapper and pulp mould end-blocks from the new cartridge's box.
- Place the empty cartridge in the box of your new cartridge. Seal the box.

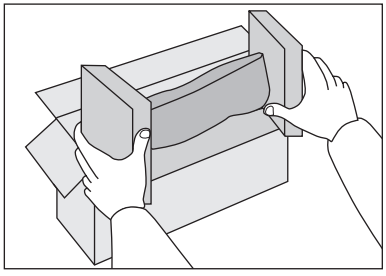

■ **Option B: Volume Box Return**

We encourage you to use this option as a more efficient way to ship cartridges.

- Place as many cartridges as possible into one box.
  Carefully seal the box with tape;
  or
- Call **1-800-OK-Canon** to receive your free eight cartridge collection box.

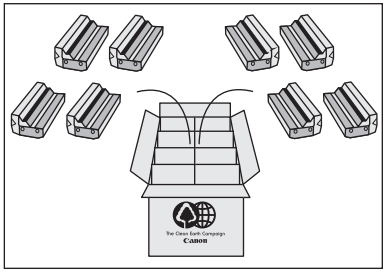

■ **Option A-2: Multiple Box Return**

We encourage you to use this option as a more efficient way to ship cartridges.

- Complete Option A-1.
- Bundle multiple cartridge boxes together securely with tape.

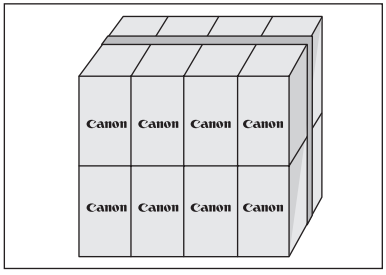

Please be sure that the shipment does not exceed UPS specifications.

Maximum weight = 70 lb. (31.8 kg)

Maximum length = 108" (2,743 mm)

Maximum girth (length + 2 x width + 2 x height) = 130" (3,302 mm)

If your shipment exceeds the above limits, please call **1-800-OK-Canon** for special shipping information.

Please Note:

Do not send defective cartridges for replacement.

Defective cartridges under warranty should be exchanged by an authorized dealer or service facility as provided in the warranty.

● Shipping

Apply the UPS authorized returning label provided in this guide.
Residents of Alaska and Hawaii: Do not use the UPS authorized returning label. For Alaska and Hawaii Canon set up alternative mail service with the U.S. Postal Service. Please call **1-800-OK-Canon** to receive U.S. Postal Service merchandise returning label.

■ Option A: UPS Pick-up

- Give the shipment to your UPS driver when you receive your next regular delivery; or
- Take the shipment to your local UPS receiving point.

■ Option B: MBE Drop off

Take the shipment to a participating MBE (Mail Boxes, Etc.) Center.
For location, please call **1-800-949-6660**.

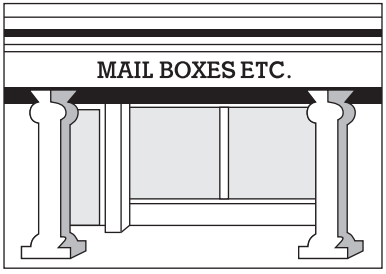

By using either of the above methods of shipment, your used cartridge(s) will be forwarded to the Canon Cartridge Collection Center at no charge to you.

For further information about the Clean Earth Campaign in the United States, please call: **1-800-OK-Canon**

CANADA PROGRAM-CANADA PROGRAMME

■ **Option A: Single Box Return**

- Repackage the empty cartridge utilizing the wrapper and pulp mould end-blocks from the new cartridge's box.
- Place the empty cartridge in the box of your new cartridge. Seal the box.
- Apply the Canon Canada Inc./Canada Post label provided in this brochure. Canon's labels are specially marked so that Canon pays the postage.
- Deposit your empty cartridge in any full size street mailbox or take it to your local Canada Post outlet or franchise.

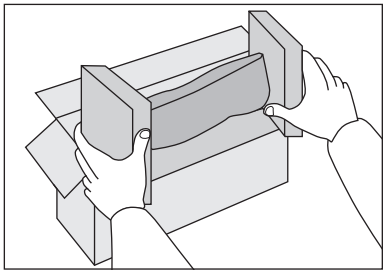

■ **Option B: Volume Box Return (eight or more cartridges)**

We encourage you to use this option as a more efficient way to ship cartridges.

- Call **1-800-667-2666** to receive your free Canon collection box kit.
- The collection box can accommodate eight individual cartridge boxes.
- Place your eight individually packaged boxes of empty cartridges into the Canon collection box. Seal the box.
- Apply the Canon Canada Inc./Canada Post label provided in this brochure.
- Canon's labels are specially marked so that Canon pays the postage.
- Deliver to any local Canada Post outlet or franchise. Customers who hold a Commercial pick-up agreement with Canada Post may have their collection box picked up.

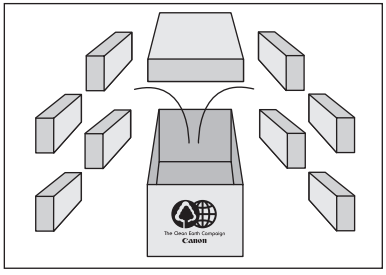

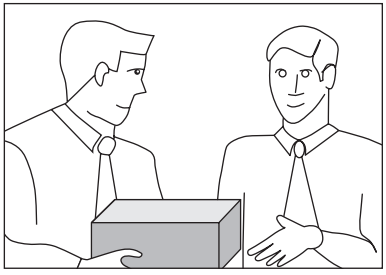

Working to preserve endangered species is a long-standing Canon interest.
To this end, for every cartridge collected, Canon Canada donates $1, shared equally between World Wildlife Fund Canada and the Nature Conservancy of Canada. This donation is utilized in Canada.

- For further information about The Clean Earth Campaign in Canada, please call or write to Canon.
  1-800-667-2666
  Canon Canada Inc.
  Corporate Customer Relations
  6390 Dixie Road
  Mississauga, ON L5T 1P7

Transporting the Machine

Follow this procedure to avoid vibration damage to the machine when transporting it over a long distance.

CAUTION

Be sure at least two people carry the machine.

1 **Disconnect the power cord and all the cables from the back of the machine.**

2 **Open the left cover.**

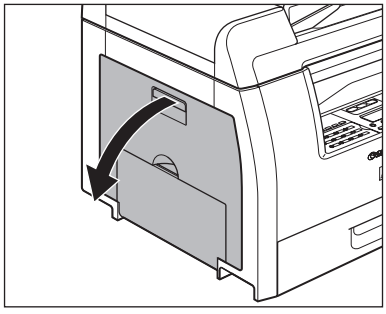

3 **Grasp the blue plastic pull tab (A) on the toner cartridge.**

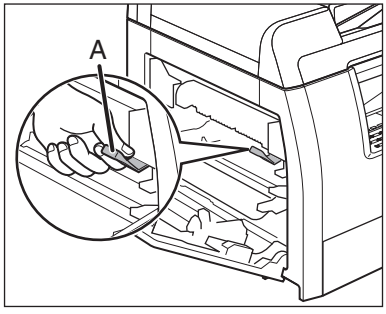

4 **Pull the blue plastic pull tab until you can easily hold the handle of the toner cartridge.**

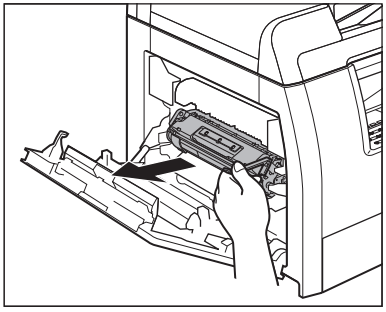

5 **Remove the toner cartridge.**

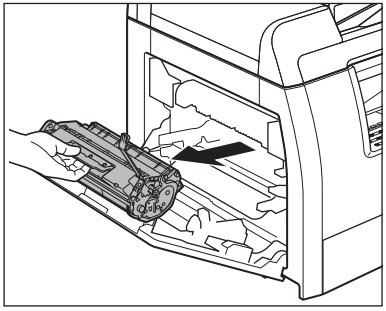

CAUTION

- Always hold the toner cartridge by its handle.
- To avoid exposing the toner cartridge to light, place it in its protective bag or wrap it in a thick cloth.
- Do not open the drum protective shutter on the toner cartridge. Print quality may deteriorate if the drum surface is exposed to light or is damaged.

6 Close the left cover.

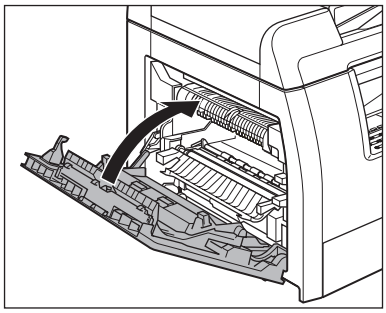

CAUTION

Be careful not to get your fingers caught.

7 Make sure the multi-purpose tray and the paper stopper are back in their original position.

8 Pick up the machine using the provided hand grips on the left and right sides.

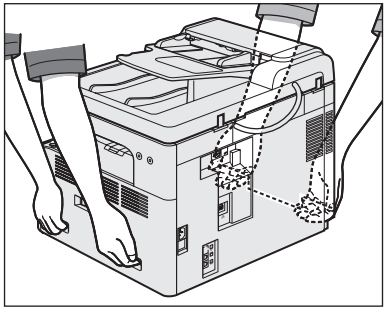

CAUTION

- Be sure at least two people carry the machine.
- Do not lift the machine by any of its attachments. Dropping the machine can cause personal injury.
- If you have a back problem, make sure to check the weight of this machine before carrying. (See “Specifications,” on p. 14-1.)

12 Troubleshooting

Clearing Jams

When a jam occurs in the machine, the paper jam message appears on the LCD display. Check the jam location indicator where the jam occurs, then remove the jammed paper.

NOTE

Do not force a jammed document or paper out of the machine. Contact Canon Customer Care Center for assistance if needed.

Document Jams

When <CHECK DOCUMENT> or <DOCUMENT TOO LONG> appears on the LCD display, remove a jammed document from the ADF or the document delivery slot.

CAUTION

- When removing jammed documents or paper, take care not to cut your hands on the edges of the document or paper.
- When removing jammed paper or when inspecting the inside of the machine, do not allow necklaces, bracelets, or other metal objects to touch the inside of the machine, as this may result in burns or electrical shock.

1 **Open the ADF.**

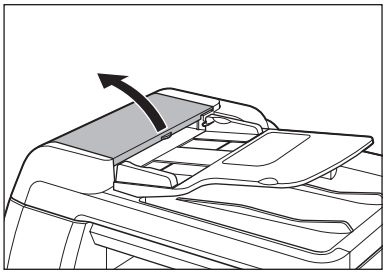

2 **Remove any jammed documents.**

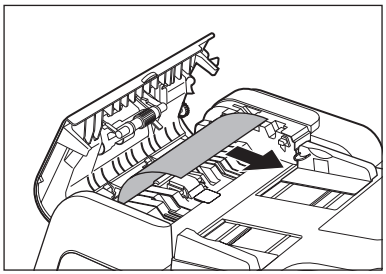

NOTE

Do not pull the document forcefully as it may tear.

3 **Lift the document feeder tray.**

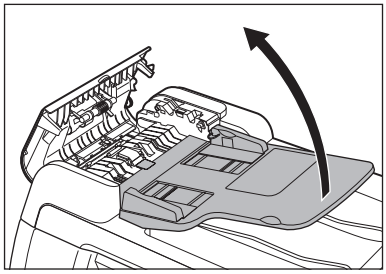

4 **Remove any jammed documents.**

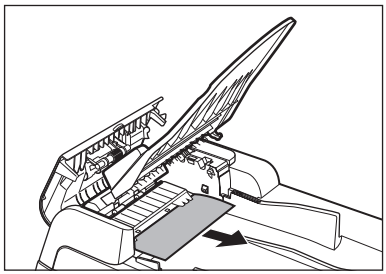

5 **Lower the document feeder tray and close the ADF.**

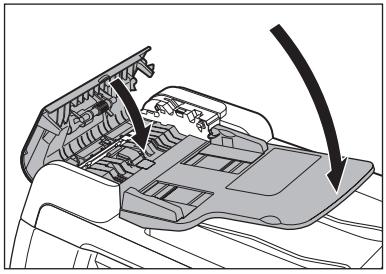

CAUTION

Be careful not to get your fingers caught.

6 **Open the platen glass cover, and remove any jammed documents.**

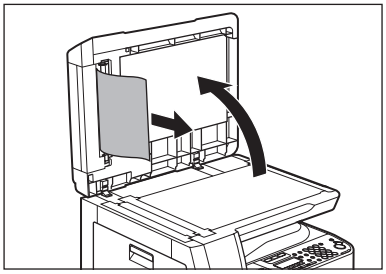

7 **Close the platen glass cover.**

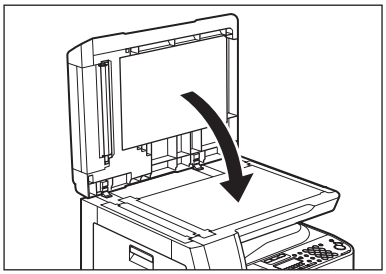

CAUTION

Be careful not to get your fingers caught.

Paper Jams

When <PAPER JAM> appears on the LCD display, remove jammed paper from inside the machine first, then from the paper cassette if necessary. Check the following if you experience repeated paper jams:

– Even the edge of the paper stack by a flat surface before loading it in the machine.
– Check that the paper you are using meets the requirements for use. (See “Print Media,” on p. 3-1.)
– Make sure you have removed any scraps of paper from inside the machine.

1 **Open the left cover.**

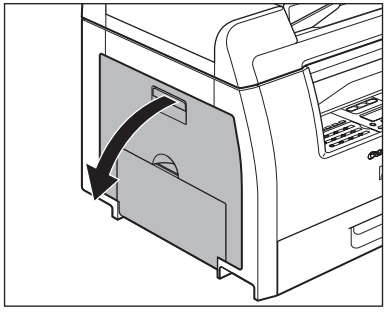

2 **Carefully pull the jammed paper out of the machine.**

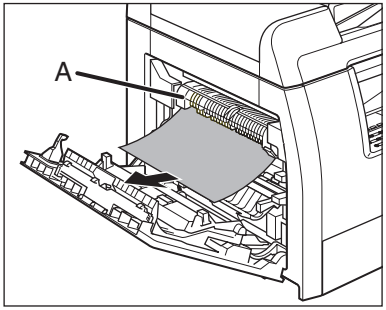

CAUTION

– Do not touch the fixing assembly (A) as it becomes very hot during use.
– If you tear the paper, remove any torn pieces to avoid further jams.
– If loose toner comes into contact with your skin or clothing, wash with cold water. Warm water will set the toner.

3 **Tilt the 2-sided transport guide (A) toward the machine, then remove the jammed paper (Only for 2-sided copying).**

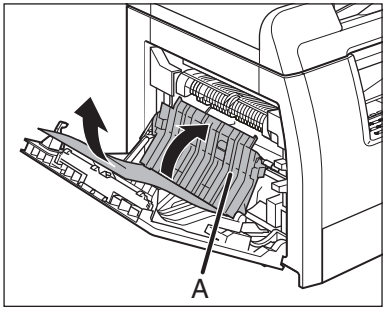

4 **Lift and hold the transcription frame (A), then remove the jammed paper (Only for 2-sided copying).**

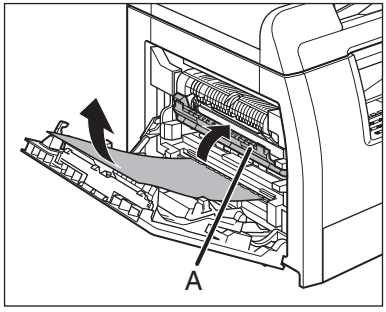

5 **Close the left cover.**

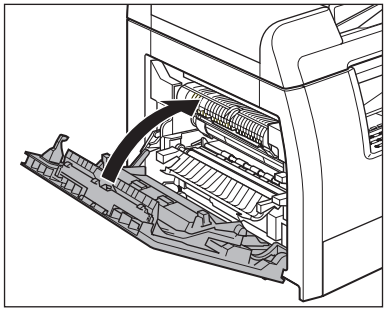

CAUTION

Be careful not to get your fingers caught.

6 **If you use the optional paper cassette, open the cover on the left side of the optional paper cassette. Remove any jammed paper, then close the cover.**

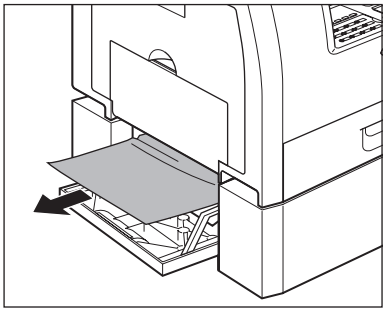

7 **Pull out the paper cassette and push the corners of the stack under the tabs.**

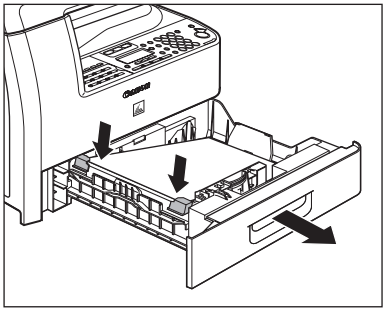

8 Gently push the paper cassette back into the machine until it clicks.

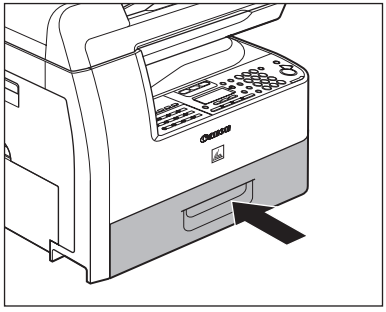

CAUTION

Be careful not to get your fingers caught.

LCD Messages

See the table below when the LCD displays error messages.

Message	Description	Action
ADJUSTING **WAITING TO SCAN**	The machine is not ready for scanning.	Wait until the machine is ready.
AUTO REDIAL	This message appears when the recipient is engaged in direct sending and the job is waiting.	Disappears when the transmission restarts.
CHANGE PAPERSIZE	The size of the paper in the paper cassette or multi-purpose tray is different from that of the paper specified in <REG. PAPER SIZE> or <MP TRAY STD SET> in the <COMMON SETTINGS> menu.	– Load the paper which size is shown on the lower line of the LCD display. Or change the paper size setting. Then reset the machine by opening the left cover and then closing it. – If you are trying to print a report or list, set the paper size to <LTR> or <LGL>, then load paper of the same size. Then reset the machine by opening the left cover and then closing it.
CHANGE REG'D SIZE **→COMMON SETTINGS**	This message appears at the same time when <LOAD PAPER> is shown. You may not print at the current paper size.	Change paper on the paper cassette or multi-purpose tray. And you must also change the size setting in the <COMMON SETTINGS> menu.
CHECK DOCUMENT	A document jam may have occurred in the ADF.	Remove the jammed document.
CLOSE COVER	A cover is open.	Close the cover shown on the lower line of the LCD display.

Message	Description	Action
DATA ERROR	The machine may have trouble.	Contact Canon Customer Care Center.
DOCUMENT TOO LONG	The document is longer than 24 7/8" (630 mm), or is not feeding correctly.	– Scan the document on the platen glass. – Reduce the length of the document to within 24 7/8" (630 mm), then try again.
FEEDER PAPER JAM CHECK THE FEEDER	A document jam may have occurred in the ADF.	Remove the jammed document.
LOAD PAPER	No paper is loaded in the paper cassette or multi-purpose tray, or not inserted correctly.	Insert the paper cassette as far as it will go or load paper.
MEM IN USE nn%	This message shows the percentage of the memory currently in use. This message is displayed when you set the document in the ADF to send a fax.	If you need more space, wait for the machine to send any faxes in memory. Also print, send, or delete any documents stored in memory.
MEMORY FULL	– The machine is full of jobs.	– Print, send, or delete any documents stored in memory. – Divide the document stack or data into a few parts and try again one by one. – Send the document with low resolution. – When this message appears during using the ADF, the scanning document stops halfway. In this case, clear the paper jam from the ADF.

Message	Description	Action
MEMORY FULL	– The number of fax jobs that can be stored in memory reached the maximum.	– The maximum numbers of jobs that can be stored in memory are as follows (Based on the condition that the other party sends the fax by the MF6550/ MF6560/MF6580 with ITU-T No.1 Chart standard mode); MF6560/MF6580: Up to 70 jobs for sending or 90 jobs for receiving, or 95 fax jobs including sending and receiving jobs MF6550: Up to 20 jobs for sending or 20 jobs for receiving, or 25 fax jobs including sending and receiving jobs Wait for the machine to send any faxes in memory. Also print, send, or delete any documents stored in memory.
NO APPROPRIATE SIZE	Although <PAPER SELECT> is set to <AUTO> in <STANDARD SETTINGS> in the <COPY SETTINGS> menu, appropriate-sized paper is not set in the paper cassette nor on the multi-purpose tray.	Select the paper size, or set the copy ratio. If you press [Start] while this message is displayed, the paper with the least margin is selected automatically and printing starts.

Message	Description	Action
NOT AVAILABLE NOW	– You pressed the one-touch speed dialing key or coded speed dialing number that has already been registered, while you perform group dial registration. – You pressed the group dialing that has already been registered, while you perform one-touch or coded speed dialing registration. – You have specified the group dialing when the line is off the hook.	– Register the key or number that is not used for the speed dialing. – Specify the recipient other than group dialing.
NOT REGISTERED	The telephone number you attempted to dial using a speed dialing function was not registered.	Register the telephone number before using the speed dialing function.
OUTPUT TRAY FULL	The paper delivery tray is full of paper.	Remove the printouts from the paper delivery tray.
PAPER JAM	Paper jams have occurred in the machine.	Remove the jammed paper. The cover must be opened and closed to resume the current job. If this message disappears while printing from a PC, press [Start] to bring the printer back on-line.
PLATEN GLASS DIRTY CLEAN PLATEN GLASS	The ADF scanning area on the left side of the platen glass may be dirty.	Clean the ADF scanning area, then press [OK].

Message	Description	Action
PLEASE WAIT	This message appears when turning on the main power switch, or when the machine is not ready for printing.	Wait until the message disappears.
RECEIVED IN MEMORY	The machine received the fax in memory because paper or toner ran out, paper jams occurred, or incorrect-size paper was loaded.	Load the correct-size paper in the paper cassette, replace the toner cartridge, or clear the paper jams. For more information, see the following: “Setting Paper Type and Size,” on p. 3-8 “Replacing the Toner Cartridge,” on p. 11-12 “Clearing Jams,” on p. 12-1
START AGAIN	– A transmission error occurred because the line condition was poor. – The paper jammed or ran out during printing a report.	– Check the line condition, then try again. – Clear the paper jam, or replenish the paper, then try again.
STOP KEY PRESSED PRESS OK KEY	[Stop] has been pressed while scanning the document using the ADF.	Press [OK], then set the document again.

Message	Description	Action
SYSTEM ERROR	Some kind of error has occurred in the machine.	Turn off the main power switch, wait for more than 10 seconds, then turn it on again. If the message persists, unplug the machine from the power supply and contact Canon Customer Care Center.
TONER IS NOT SET INSERT TONER	A toner cartridge is not installed or not installed correctly.	Install the toner cartridge correctly.
TONER LOW PREPARE NEW TONER	The toner is running low.	Remove and rock the toner cartridge 5 or 6 times to distribute toner evenly, then reinstall the toner cartridge. If the message persists, replace the toner cartridge.
TRANSMITTING...	During the current transmission, the machine may have tried to send a document identified from the list of documents in memory.	Wait until the transmission from memory is complete.

Error Codes (MF6550/MF6560/MF6580 Only)

An error code is a four-digit code shown on an ERROR TX REPORT or an ERROR RX REPORT when an error occurs.

```
12/31/2006  10:50 FAX 123XXXXXX       CANON                          001

                        ***************************
                        ***   ERROR TX REPORT   ***
                        ***************************


            TX FUNCTION WAS NOT COMPLETED

            TX/RX NO                0005
            RECIPIENT ADDRESS       111XXXXX
            DESTINATION ID
            ST. TIME                12/31 10:50
            TIME USE                00'00
            PAGES SENT                0
            RESULT                  NG      # 0018 BUSY/NO SIGNAL
```

Error Code

For details on reports, see Chapter 6, “Reports and Lists,” in the Advanced Guide.

See the table below for individual error codes.

Error Code	Description	Action
#0001	A document may be jammed.	Remove the jammed document.
#0003	– An attempt was made to send a document of 24 7/8" (630 mm) or longer from the ADF. – A document takes a long time to send because it contains too much data. – A document takes a long time to receive.	– Divide the document into smaller parts and send from the platen glass. – Reduce the scanning resolution before sending. – Contact the other party and ask them to reduce their scanning resolution or divide the document into smaller parts for sending.

Error Code	Description	Action
#0005	– The other fax machine did not respond within 35 seconds. – The other party may not be using a G3 fax machine.	– Send the document again. Contact the other party and have them check their fax machine. If you are making an overseas call, add a pause to the number. – Check with the other party and send the document to a G3 fax machine. If the other party does not have a G3 fax machine, try sending your document using a transmission mode the other party's fax machine supports.
#0009	The paper has run out or the paper cassette is not set properly.	Load the paper or reset the paper cassette properly.
#0012	You could not send because the other party's fax machine is out of paper.	Contact the other party and ask them to load the paper.
#0018	There is no reply when you redial. You could not send, because your fax signal was not returned as the other party's line was engaged.	Check that the other party's line is not engaged and try again from the beginning.
#0037	The memory is full.	Print, send, or delete any documents stored in memory.
#0995	Communication reservation is cleared.	If necessary, try again from the beginning.

If a Power Failure Occurs

If power is suddenly lost due to an outage or accidental unplugging, a built-in battery retains the user data settings and the speed dialing settings. Any sent or received documents stored in memory are backed up for about 60 minutes.
During a power cut, functions are limited as follows:

– You cannot send, receive, copy, scan, or print documents.
– You may not be able to make telephone calls using an external telephone, depending on the type of telephone you use.
– You can receive telephone calls using an external telephone depending on the type of telephone you use.

If You Cannot Solve a Problem

If you cannot solve the problem after having referred to the information in this chapter, contact Canon Customer Care Center at 1-800-828-4040 between the hours of 8:00 A.M. to 8:00 P.M. EST Monday through Friday and 10:00 A.M. to 8:00 P.M. on Saturday.

Please have the following information ready when you contact Canon:

– Product name (imageCLASS MF6530/MF6531/MF6550/MF6560/MF6580)
– Serial number (On the label located on the left cover)
– Place of purchase
– Nature of problem
– Steps you have taken to solve the problem and the results

CAUTION

If the machine makes strange noises, emits smoke or odd odor, unplug it immediately and contact the Canon Customer Care Center. Do not attempt to disassemble or repair the machine yourself.

NOTE

Attempting to repair the machine yourself may void the limited warranty.

13 Machine Settings

Machine Settings

You can adjust the machine settings from the Setting Menu to customize the way the machine works. To see the list of current settings, print out USER'S DATA LIST.

Printing USER'S DATA LIST

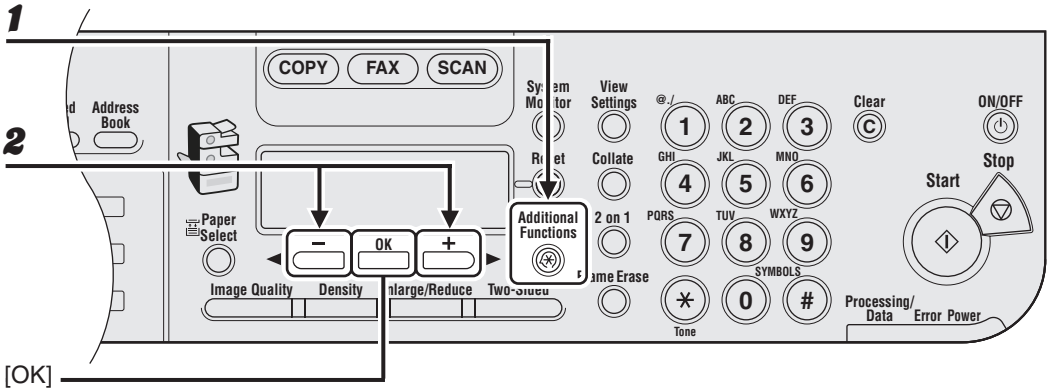

1 **Press [Additional Functions].**

2 **Press [◄ –] or [+ ►] to select <REPORT SETTINGS>, then press [OK].**

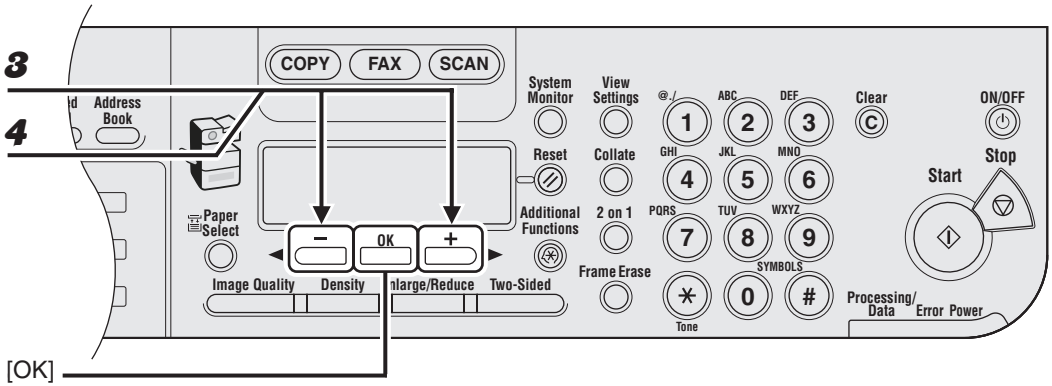

3 **Press [◄ –] or [+ ►] to select <LIST PRINT>, then press [OK].**

4 **Press [◄ –] or [+ ►] to select <USER DATA LIST>, then press [OK].**

Accessing the Setting Menu

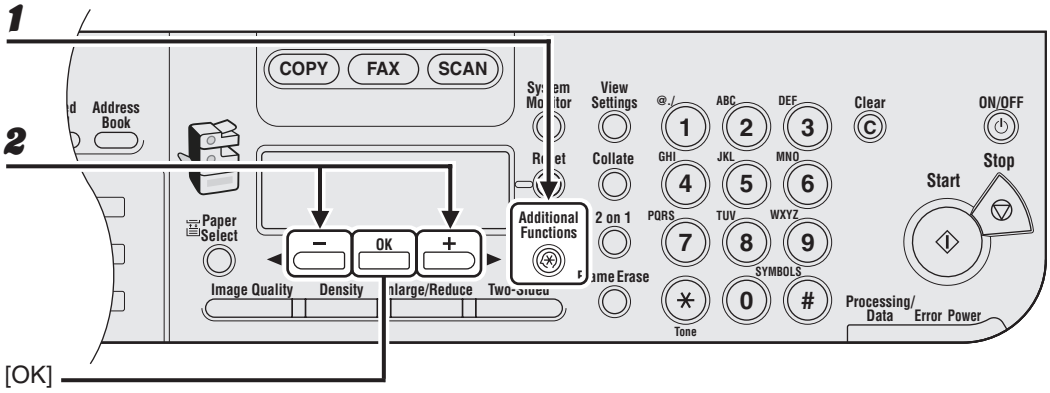

1 **Press [Additional Functions].**

2 **Press [◄ −] or [+ ►] to select the menu you want to access, then press [OK].**

<COMMON SETTINGS>
<COPY SETTINGS>
<FAX SETTINGS>*
<ADDRESS BOOK SET.>*
<PRINTER SETTINGS>
<TIMER SETTINGS>
<ADJUST./CLEANING>
<REPORT SETTINGS>
<SYSTEM SETTINGS>

* MF6550/MF6560/MF6580 Only

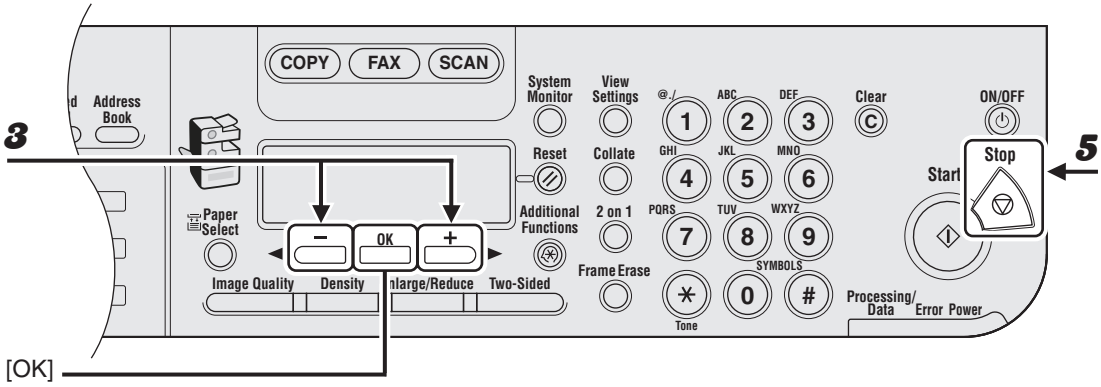

3 **Press [◄ –] or [+ ►] to select a submenu, then press [OK].**

4 **To register the settings or go to a submenu item, press [OK].**

5 **When finished, press [Stop] to return to standby mode.**

NOTE

– If you press [Stop] before pressing [OK], the setting will not be registered.
– Press [Additional Functions] to return to the previous display.

Setting Menu

NOTE

– Depending on the country of purchase, some settings may not be available.
– The menus described in this section are based on the model imageCLASS MF6580. Depending on the model of your machine, some settings may not be available and the number on the top of each menu may vary.

COMMON SETTINGS	
Setting Item	**Description**
1. DEFAULT SETTINGS	Selects which standby display appears when turning on the power. – COPY – FAX* – SCAN
2. AUTO CLEAR SET.	Selects which standby display appears after the Auto Clearing function is activated.
INITIAL FUNCTION	Sets to return standby display that is selected in <DEFAULT SETTINGS>.
SELECTED FUNCTION	Sets to return standby display of the current mode.
3. AUDIBLE TONES	Sets whether to sound audible tones and adjusts their volume.
1. ENTRY TONE	Beeps when pressing the keys on the operation panel. – ON (1-3) – OFF

COMMON SETTINGS	
2. ERROR TONE	Beeps when an error (e.g., paper jam) occurs. – ON (1-3) – OFF
3. TX JOB DONE TONE*	Beeps when fax is sent. – ERROR ONLY (1-3) – OFF – ON (1-3)
4. RX JOB DONE TONE*	Beeps when fax is received. – ERROR ONLY (1-3) – OFF – ON (1-3)
5. SCAN DONE TONE	Beeps when scanning is completed. – ERROR ONLY (1-3) – OFF – ON (1-3)
6. PRINT DONE TONE	Beeps when printing is completed. – ERROR ONLY (1-3) – OFF – ON (1-3)
4. TONER SAVER MODE	Sets whether to reduce toner consumption. – OFF – ON
5. PRINTER DENSITY	Recalibrates the density adjustment scale if differences between the image in the document and the print occur. (1-9)

COMMON SETTINGS	
6. AUTO CASS. SELCT	Sets whether to change to another paper source of the same size if the current paper source runs out while processing a job.
1. COPY	Sets whether to activate Auto Cassette Select function when copying. – 1. CASSETTE 1 (ON/OFF) – 2. CASSETTE 2 (ON/OFF)** – 3. MP TRAY (OFF/ON)
2. PRINTER	Sets whether to activate Auto Cassette Select function when printing. – 1. CASSETTE 1 (ON/OFF) – 2. CASSETTE 2 (ON/OFF)**
3. FAX*	Sets whether to activate Auto Cassette Select function when faxing. – 1. CASSETTE 1 (ON/OFF) – 2. CASSETTE 2 (ON/OFF)** – 3. MP TRAY (OFF/ON)
4. OTHER	Sets whether to activate Auto Cassette Select function when printing a report or list. – 1. CASSETTE 1 (ON/OFF) – 2. CASSETTE 2 (ON/OFF)** – 3. MP TRAY (OFF/ON).
7. SELECT PAPER TYPE	Sets the paper type for the paper cassette. (See “For the Paper Cassette,” on p. 3-8.)
1. CASSETTE 1	Sets the paper type for paper cassette 1.
2. CASSETTE 2**	Sets the paper type for paper cassette 2.

COMMON SETTINGS	
8. REG. PAPER SIZE	Sets the paper size for the paper cassette. (See “For the Paper Cassette,” on p. 3-8.)
1. CASSETTE 1	Sets the paper size for paper cassette 1.
2. CASSETTE 2**	Sets the paper size for paper cassette 2.
9. ENERGY IN SLEEP	Selects power consumption when the machine is in Sleep mode between two levels. – LOW (Only functional for MF6530/MF6531, or when <RX MODE> is not set to <FaxOnly> for MF6550/MF6560/MF6580) – HIGH
10.MP TRAY STD SET	Sets the standard paper size and type for the multi-purpose tray if you always use a same kind of paper. (See “For the Multi-Purpose Tray,” on p. 3-11.)
OFF	Deactivates the multi-purpose tray standard settings.
ON	Activates the multi-purpose tray standard settings.
1. PAPER SIZE	Sets paper size as the multi-purpose tray standard.
2. SELECT PAPER TYPE	Sets paper type as the multi-purpose tray standard.
11.PAPER FEED SWITCH	Selects the paper feed method when you want to make one-sided or two-sided prints on preprinted paper (paper which has logos or patterns already printed on it).
1. MP TRAY	Selects the paper feed method for the multi-purpose tray.
SPEED PRIORITY	Print speed has priority.
PRINT SIDE	The machine starts printing on the side of paper loaded facing up. Print speed becomes slower for one-sided print. Only available for LTR, LGL and A4.

COMMON SETTINGS	
2. CASSETTE 1	Selects the paper feed method for paper cassette 1.
SPEED PRIORITY	Print speed has priority.
PRINT SIDE	The machine starts printing on the side of paper loaded facing down. Print speed becomes slower for one-sided print.
3. CASSETTE 2**	Selects the paper feed method for paper cassette 2.
SPEED PRIORITY	Print speed has priority.
PRINT SIDE	The machine starts printing on the side of paper loaded facing down. Print speed becomes slower for one-sided print.
12.DISPLAY LANGUAGE	Selects the language on the display. (See “Specifications,” on p. 14-1.)
13.ADF DIRTY ERROR	Sets whether the error message will appear when the ADF is dirty. – DISPLAY – DO NOT DISPLAY
14.INIT. COMMON SET.	Restores all <COMMON SETTINGS> to the default except for <DISPLAY LANGUAGE>. – OFF – ON

* MF6550/MF6560/MF6580 Only
** Only for users of the optional paper cassette

COPY SETTINGS	
Setting Item	**Description**
1. IMAGE DIR PRIORTY	Sets whether to activate the image direction priority.
OFF	Copy orientation is same as the document.
ON	Copy orientation is rotated at 180 degrees.
2. STANDARD SETTINGS	Sets the default setting for copying.
1. IMAGE QUALITY	Sets the document type for copying. – TEXT – PHOTO – TEXT/PHOTO
2. DENSITY	Sets the density for copying. – AUTO – MANUAL (1-9)
3. ZOOM RATIO	Sets the zoom ratio for copying.
PRESET RATIO	Selects the zoom from the preset ratios. (DIRECT 100%, 115% B5→A4, 121% LGL→11x17, 122% A5→B5, 129% STMT→LTR, 141% A5→A4, 200% MAX., 50% MIN., 64%, 70% A4→A5, 73% 11x17→LGL, 78% LGL→LTR, 81% B5→A5, 86% A4→B5)
MANUAL	Enters the zoom ratio by 1% increments. (50%-200%)
4. COPIES	Sets the number of copies (1-99).
5. AUTO COLLATE	Sets whether to collate the copies automatically. – OFF – COLLATE

COPY SETTINGS	
6. TWO-SIDED	Sets the type of two-sided copying. – OFF – 1 > 2-SIDED – 2 > 2-SIDED – 2 > 1-SIDED
7. FRAME ERASE	Sets the type of Frame Erase copying. – OFF – ORG. FRAME ERASE – BOOK FRAME ERASE – BINDING HOLE
8. PAPER SELECT	Sets the paper source for copying. – AUTO – CASSETTE 1 – CASSETTE 2**
3. SHARPNESS	Adjusts the sharpness of the copied image. (1-9)
4. PAPER SIZE GROUP	Selects a paper size group for your machine. – INCHES – A – AB
5. MM/INCH ENTRY	Sets the unit of measurement of the frame erase width. – INCHES – MM
6. INIT. COPY SET.	Restores all <COPY SETTINGS> to the default. – OFF – ON

** Only for users of the optional paper cassette

FAX SETTINGS (MF6550/MF6560/MF6580 Only)	
Setting Item	**Description**
1. RX MODE	Selects the receive mode. (See “Set the Machine for Receiving Faxes,” in the Starter Guide.) – FaxOnly – FaxTel – AnsMode – DRPD – Manual
2. USER SETTINGS	Specifies the basic operation settings in the fax mode.
1. UNIT TELEPHONE #	Registers your fax number. (See “Set the Machine for Sending Faxes,” in the Starter Guide.)
2. UNIT NAME	Registers your name/company name. (See “Set the Machine for Sending Faxes,” in the Starter Guide.)
3. TX TERMINAL ID	Sets the options for sender information.
1. PRINTING POSITION	Selects where the sender information is printed in small type at the top of each page. – OUTSIDE IMAGE – INSIDE IMAGE
2. TELEPHONE # MARK	Prefixes your number with the abbreviations FAX or TEL in your sender information. – FAX – TEL
4. SCANNING DENSITY	Adjusts the scanning density for sending a fax. (1-9)

FAX SETTINGS (MF6550/MF6560/MF6580 Only)	
5. TEL LINE TYPE	Selects the telephone line type. (See “Set the Machine for Sending Faxes,” in the Starter Guide.) – TOUCH TONE – ROTARY PULSE
6. VOLUME CONTROL	Adjusts the monitor volume and the calling volume.
1. MONITOR VOL. CTRL	Sets the volume for monitor tone during the fax transmission. (0-3)
2. CALLING VOLUME	Set the volume of the ring produced when the machine detects a call. (1-3)
7. OFFHOOK ALARM	Sets whether the alarm sounds when the handset of the external telephone is off the hook. – ON – OFF
8. STANDARD SETTINGS	Sets the default setting for faxing.
1. DENSITY	Sets the default density for faxing. – STANDARD – DK – LT
2. IMAGE QUALITY	Sets the default image quality for faxing. – FINE – PHOTO – SUPER FINE – ULTRA FINE – STANDARD
3. DIRECT TX	Sets whether to use <DIRECT TX> as default. – OFF – ON

FAX SETTINGS (MF6550/MF6560/MF6580 Only)	
9. INIT. FAX STD SET	Sets whether to restore <STANDARD SETTINGS> in <FAX SETTINGS> to the default. – OFF – ON
3. TX SETTINGS	Sets the transmission functions.
1. ECM TX	Sets whether the ECM (Error Correction Mode) transmission is activated. – ON – OFF
2. PAUSE TIME	Sets the pause time when you insert pause into the dialing sequence. (1SEC-15SEC)
3. AUTO REDIAL	Sets whether to redial automatically when the other line is busy or a transmission error occurs. (See Chapter 1, “Advanced Fax Features,” in the Advanced Guide.)
ON	Customizes the redial operation.
1. REDIAL TIMES	Sets the number of retries. (1TIMES-10TIMES)
2. REDIAL INTERVAL	Sets period of time before redialing. (2MIN.-99MIN.)
3. TX ERROR REDIAL	Sets whether the machine redials automatically when transmission error occurs. – ON – OFF
OFF	After the first attempt at dialing fails, redialing is not attempted.

FAX SETTINGS (MF6550/MF6560/MF6580 Only)	
4. TIME OUT	Sets whether to scan a document automatically after entering the fax number. * This function is not available when you dial with the numeric keys. – ON – OFF
5. DIALING LINE CHCK	Sets whether to check the telephone line condition. – ON – OFF
4. RX SETTINGS	Sets the reception functions.
1. ECM RX	Sets whether the ECM (Error Correction Mode) reception is activated. – ON – OFF
2. FAX/TEL OPT. SET	Sets the optional items in <FaxTel> mode. (See Chapter 1, “Advanced Fax Features,” in the Advanced Guide.)
1. RING START TIME	Sets the time the machine takes to check whether a call is a fax or a voice call. (0SEC-30SEC)
2. F/T RING TIME	Selects the ring length for voice calls. (15SEC-300SEC)
3. F/T SWITCH ACTION	Selects whether the machine switches to receive mode after the ring time has elapsed, or whether if disconnects the call. – RECEIVE – DISCONNECT
3. DRPD:SELECT FAX	Selects the ring pattern for fax calls. – DOUBLE RING – SHORT-SHORT-LONG – SHORT-LONG-SHORT – OTHER RING TYPE – NORMAL RING

FAX SETTINGS (MF6550/MF6560/MF6580 Only)	
4. INCOMING RING	Sets whether the machine rings when it receives a voice call, enabling you to answer the call. This function is only available when <RX MODE> is set to <FaxOnly> or <FaxTel>.
OFF	The telephone does not ring when it receives a voice call. (In Sleep mode, the telephone may ring one or two times.)
ON	The telephone rings when it receives a voice call if an external telephone is connected.
RING COUNT	Sets the number of incoming rings before the machine answers. (1TIMES-99TIMES)
5. REMOTE RX	Sets whether to use remote receiving. This function is not available when <ENERGY IN SLEEP> in <COMMON SETTINGS> is set to <LOW>. (See Chapter 1, “Advanced Fax Features,” in the Advanced Guide.)
ON	The machine enables remote receiving.
REMOTE RX ID	You can dial a code on remote extension to start receiving a document. A combination of two characters using 0 to 9, * and # is possible.
OFF	The machine disables remote receiving.
6. MANUAL/AUTO	Sets whether the machine switches to document receive mode after the external telephone rings for a specified length of time in manual receive mode.
OFF	The external telephone keeps ringing until someone answers the call manually.
ON	The machine switches to document receive mode after the external telephone rings for a specified time.
F/T RING TIME	Sets the length of time to elapse before the machine switches to document receiving. (1SEC-99SEC)

FAX SETTINGS (MF6550/MF6560/MF6580 Only)	
5. PRINTER SETTINGS	Sets the to printer functions.
1. RECEIVE REDUCTION	Sets whether the received images print out at a reduced size. (See Chapter 1, “Advanced Fax Features,” in the Advanced Guide.)
ON	Image reduction is turned on.
1. RECEIVE REDUCTION	Selects the reducing type. – AUTO – FIXED REDUCTION (90%, 95%, 97%, 75%)
2. REDUCE DIRECTION	Selects the reducing direction. – VERTICAL ONLY – HORIZ & VERTICAL
OFF	Image reduction is turned off.
2. TWO-SIDED PRINT	Sets the type of two-sided printing for faxing. (See Chapter 1, “Advanced Fax Features,” in the Advanced Guide.) – OFF – ON
3. CONT. PRINTING	Selects how the machine responds when the <TONER LOW/PREPARE NEW TONER> message appears.
RX TO MEMORY	The machine stores all documents in memory.
KEEP PRINTING	The machine does not store documents in memory if the toner runs out. Reset to <RX TO MEMORY> after replacing the toner cartridge.

ADDRESS BOOK SET. (MF6550/MF6560/MF6580 Only)	
Setting Item	**Description**
1. 1-TOUCH SPD DIAL	Registers the information on one-touch speed dialing. Up to 23 destinations can be registered. (See “Registering One-Touch Speed Dialing,” on p. 4-7.)
1. TEL NUMBER ENTRY	Registers the recipient’s fax number (max. 120 digits, including spaces).
2. NAME	Registers the recipient’s name (max. 16 characters, including spaces).
3. OPTIONAL SETTING	Selects whether to use the advanced functional settings for each one-touch speed dialing recipient registered in the machine. (See Chapter 1, “Advanced Fax Features,” in the Advanced Guide.
OFF	The optional setting is not set for this speed dialing.
ON	The optional setting is set for this speed dialing.
1. INTERNATIONAL	Selects a mode for documents you are sending. – DOMESTIC – LONG DISTANCE 1 – LONG DISTANCE 2 – LONG DISTANCE 3
2. TX SPEED	Selects a transmission speed. (33600 bps, 14400 bps, 9600 bps, 4800 bps)
3. ECM	Selects whether to use ECM (Error Correction Mode). – ON – OFF

ADDRESS BOOK SET. (MF6550/MF6560/MF6580 Only)	
2. CODED SPD DIAL	Registers the information on coded speed dialing. Up to 100 destinations can be registered. (See “Registering Coded Speed Dialing,” on p. 4-15.)
1. TEL NUMBER ENTRY	Registers the recipient’s fax number (max. 120 digits, including spaces).
2. NAME	Registers the recipient’s name (max. 16 characters, including spaces).
3. OPTIONAL SETTING	Selects whether to use the advanced functional settings for each coded speed dialing recipient registered in the machine. (See Chapter 1, “Advanced Fax Features,” in the Advanced Guide.)
OFF	The optional setting is not set for this speed dialing.
ON	The optional setting is set for this speed dialing.
1. INTERNATIONAL	Select the mode for documents you send. – DOMESTIC – LONG DISTANCE 1 – LONG DISTANCE 2 – LONG DISTANCE 3
2. TX SPEED	Select the transmission speed. (33600 bps, 14400 bps, 9600 bps, 4800 bps)
3. ECM	Selects whether to use ECM (Error Correction Mode). – ON – OFF

ADDRESS BOOK SET. (MF6550/MF6560/MF6580 Only)	
3. GROUP DIAL	Registers the information on group dialing. Up to 122 destinations can be registered. (See “Registering Group Dialing,” on p. 4-23.)
1. TEL NUMBER ENTRY	Registers the recipient fax numbers by specifying the one-touch speed dialing keys or coded speed dialing codes.
2. NAME	Registers the group name (max. 16 characters, including spaces).

PRINTER SETTINGS	
Setting Item	**Description**
1. DEFAULT PAPERSIZE	Sets the default paper size when no paper source is specified. (LTR, STMT, EXECUTIV, ISO-B5, ISO-C5, COM10, MONARCH, DL, A4, B5, A5, LGL)
2. DEFAULT PAPERTYPE	Sets the default paper type for print jobs. This machine has internally defined optimal print modes for each specified paper type. (PLAIN PAPER, COLOR, RECYCLED, HEAVY PAPER 1, HEAVY PAPER 2, HEAVY PAPER 3, BOND, 3HOLE PUNCH PAPER, TRANSPARENCY, LABELS, ENVELOPE)
3. COPIES	Sets the number of documents printed. (1-999)
4. 2-SIDED PRINTING	Sets whether to activate two-sided printing. – OFF – ON

PRINTER SETTINGS	
5. PRINT QUALITY	Sets the image quality, density or toner saving mode for printing.
1. IMAGE REFINEMENT	Sets whether to print smoothly the jagged outlines of characters and graphics. – ON – OFF
2. DENSITY	Adjusts the print density. (1-9)
3. TONER SAVER	Sets whether toner saving mode is enabled. – OFF – ON
6. PAGE LAYOUT	Sets the printing layout.
1. BINDING	Sets the binding position for two-sided printing. – LONG EDGE – SHORT EDGE
2. MARGIN	Sets the page margin in inches or millimeters. – INCHES (-01.90INCHES-01.90INCHES) – MM (-50.0MM-50.0MM)
7. COLLATE	Sets whether to collate the printouts automatically. – OFF – COLLATE
8. ERROR TIME OUT	Sets the length of time before the machine returns an error when no data is received from the computer.
ON	Sets the error time out period. (5SEC-300SEC)
OFF	The error time out is off.
9. INIT. PRINTER SET	Restores all <PRINTER SETTINGS> to the default. – OFF – ON

PRINTER SETTINGS	
10.PCL SETTINGS***	Sets the PCL printer setting.
1. ORIENTATION	Sets the paper orientation. – PORTRAIT – LANDSCAPE
2. FONT NUMBER	Sets the default font typeface for the printer function using the corresponding font numbers. (0-120)
3. POINT SIZE	Specifies a point size for the default font. This item appears when the number in <FONT NUMBER> is that of a proportionally spaced scalable font. (4.00-999.75)
4. PITCH	Specifies the pitch for the default font. This item appears when the number in <FONT NUMBER> is that of a fixed pitch scalable font. (0.44-99.99)
5. FORM LINES	Sets the number of lines to be printed on a page. (5-128)
6. SYMBOL SET	Selects the symbol set most suited to the needs of the host computer.
7. CUSTOM PAPER	Sets whether to use a custom paper size.
OFF	Disables you to specify a custom paper size.
ON	Enables you to specify a custom paper size.
1. UNIT OF MEASURE	Selects the unit of measurement to specify a custom paper size. – INCHES – MILLIMETERS
2. X DIMENSION	Specifies the horizontal size of the custom paper. (05.00-14.00 inches (127-356 mm))
3. Y DIMENSION	Specifies the vertical size of the custom paper. (03.00-08.50 inches (76-216 mm))

PRINTER SETTINGS	
8. APPEND CR TO LF	Sets whether to append a carriage return (CR) when line feed code (LF) is received.
NO	The print head moves down to the next line when line feed code is received, and the margin does not change (such as the beginning of the next line).
YES	The print head moves to the beginning of the next line when line feed code is received.
9. ENLARGE A4	Sets whether to expand the printable area of A4 size paper to that of Letter size in width. * This setting is applicable for A4 paper and portrait orientation for the PCL5 printing only. The PCL6 printing is not supported.
OFF	All the area on a page 1/6 inch (4.23 mm) from the top, bottom, left, and right edges is available for printing on A4 paper.
ON	All the area on a page 1/6 inch (4.23 mm) from the top and bottom edges and 1/20 inch (1.28 mm) from the left and right edges is available for printing on A4 paper. Only the width increases.
11.RESET PRINTER	Clears all print jobs in progress and resets the printer function. – OFF – ON

*** MF6560/MF6580 Only

TIMER SETTINGS	
Setting Item	**Description**
1. DATE&TIME SETTING	Sets the current date and time. (See “Set Up the Machine,” in the Starter Guide.)
2. DATE TYPE SELECT	Sets the date format. – MM/DD/YYYY – DD/MM YYYY – YYYY MM/DD
3. AUTO SLEEP TIME	Sets auto sleep mode when the machine remains idle for a certain period of time. (3MIN.–30MIN.) (See “Setting Sleep Mode,” on p. 1-9.) – ON – OFF
4. AUTO CLEAR TIME	Sets auto clear mode when the machine has no operation idle for a certain period of time. (1MIN.–9MIN.) The machine returns to standby mode. (See “Setting Auto Clear Time,” on p. 1-12.) – ON – OFF

TIMER SETTINGS	
5. DAYLIGHT SV.TIME	Sets daylight saving time mode. (See “Setting Daylight Saving Time,” on p. 1-14.)
OFF	Deactivates daylight saving time mode.
ON	Activates daylight saving time mode.
1. START DATE/ TIME	Sets the start date. – 1. MONTH – 2. WEEK – 3. DAY
2. END DATE/TIME	Sets the end date. – 1. MONTH – 2. WEEK – 3. DAY

ADJUST./CLEANING	
Setting Item	**Description**
1. TRANS. ROLR CLEAN	Cleans the transcription roller. (See “Transcription Roller,” on p. 11-9.)
2. FIX.UNIT CLEANING	Cleans the fuser roller. (See “Fuser Roller,” on p. 11-4.)
3. FEEDER CLEANING	Cleans the ADF. (See “Cleaning the ADF Automatically,” on p. 11-8.)
4. SPECIAL MODE M	Sets to improve print quality or fix irregular print density. If print quality decreases or an irregularity in the print density appears, transcription output may not function adequately.
MID	Selects in normal conditions.
LOW	Selects to compensate for poor print quality that occurs when using paper that was stored for a long time at high temperatures and high humidity.
HIGH	Selects to compensate for poor quality that occurs when using heavyweight paper.
5. SPECIAL MODE N	When the two-sided printing function is used, paper may curl severely or become jammed. Enable this setting to prevent paper curling or jamming. – OFF – ON
6. SPECIAL MODE O	This setting is not functional in this model.
7. SPECIAL MODE P	Sets to activate when lightweight paper or paper which is easy to get uneven print density is used for printing. – OFF – ON
8. SPECIAL MODE Q	Enable this setting if black or white spots appear on the printed image. – OFF – ON

ADJUST./CLEANING	
9. SPECIAL MODE R	Sets whether to prevent white streaks from appearing on the printed image. When you print the halftone image or photograph after the machine has not undergone any operation for a while, the first page of printouts may have thin white streaks on the printed image. – OFF – ON
10.SPECIAL MODE S	Sets whether to reduce the waiting time for the next printout. When you change the paper size after continuous printing, the machine may take a while to start the next printing.
OFF	Does not reduce the waiting time next set of printout. (default)
SPEED PRIORITY	Reduces the waiting time to start the next set of printout. Print speed has priority; however, a condition that an previously printed image also appears faintly on the next output may occur.
11.CONT. PRINT MODE	Sets whether to prevent the back edge of the previous page from appearing on the following page during continuous printing of half-tone prints or photographs. – OFF – ON
12.BACK EDGE MODE	Sets whether to prevent back edge of paper from smudging. – OFF – ON
13.LARGE PAPER MODE	Sets whether to improve toner fix on large-sized paper. – OFF – ON
14.AUTO ADF DRTY ADJ	Sets whether to activate smudge (due to dust or dirt) reduction during printing. When the ADF is dirty, copies may contain unwanted dots or lines. – OFF – ON
15.MAINTENANCE CODE	This setting is not functional in this model.

REPORT SETTINGS	
Setting Item	**Description**
1. SETTINGS*	Sets the report functions. (See Chapter 6, “Reports and Lists,” in the Advanced Guide.)
1. TX REPORT	Sets whether the fax transmission report prints out.
PRINT ERROR ONLY	Prints a report only when a transmission error occurs.
REPORT WITH TX IMAGE	Sets whether to print the first page of the fax under the report. – OFF – ON
OUTPUT YES	Prints a report every time you send a document.
REPORT WITH TX IMAGE	Sets whether to print the first page of the fax under the report. – OFF – ON
OUTPUT NO	No report is printed.
2. RX REPORT	Sets whether the fax reception report prints out. – OUTPUT NO – PRINT ERROR ONLY – OUTPUT YES
3. ACTIVITY REPORT	Sets whether to automatically print the fax transaction report and selects its type.
1. AUTO PRINT	Sets whether an activity report is printed automatically every 40 transactions. – OUTPUT YES – OUTPUT NO
2. TX/RX SEPARATE	Sets whether an activity report is printed separately for sending and receiving or not. – OFF – ON

REPORT SETTINGS	
2. LIST PRINT	Prints reports/lists.
1. ACTIVITY REPORT*	Prints the fax transaction report (max. last 40 transactions) manually.
2. SPEED DIAL LIST*	Prints the list of fax numbers registered for speed dialing. – 1. 1-TOUCH LIST – 2. CODED DIAL LIST – 3. GROUP DIAL LIST
3. ADD BOOK DETAILS*	Prints the details of speed dialing. – 1. 1-TOUCH(DETAILS) – 2. CODED (DETAILS)
4. USER DATA LIST	Prints the setting list registered in the menu. (See “Printing USER’S DATA LIST,” on p. 13-1.)

* MF6550/MF6560/MF6580 Only

SYSTEM SETTINGS	
Setting Item	**Description**
1. DEVICE INFO	Sets device information.
1. DEVICE NAME	Registers the machine name.
2. LOCATION	Registers the machine location.
2. NETWORK SETTINGS****	Sets network setting. (See Chapter 3, “Network,” in the Advanced Guide.)
1. TCP/IP SETTINGS	Sets TCP/IP network.
1. IP ADDRESS AUTO.	Sets whether to automatically set an IP address.
ON	Enables an IP address to the machine automatically. – 1. DHCP (ON/OFF) – 2. BOOTP (OFF/ON) – 3. RARP (OFF/ON)
OFF	Allocate an IP address to the machine manually.

SYSTEM SETTINGS	
2. IP ADDRESS	Registers a fixed IP address to the machine. (See “Installing/Uninstalling Software,” in the Starter Guide.)
3. SUBNET MASK	Registers a fixed subnet mask to the machine.
4. GATEWAY ADDRESS	Registers a fixed gateway address to the machine.
5. USE LPD	Sets whether to use LPD as the print application. – ON (PORT NO.) – OFF
6. RAW SETTINGS	Sets whether to use RAW as the print application.
ON	Enables to use RAW.
1. PORT NO.	Enters the port number.
2. USE BIDIRECTIONAL	Sets whether to use bi-directional communication. – ON – OFF
OFF	Disables to use RAW.
7. USE HTTP	Sets whether to activate HTTP (HyperText Transfer Protocol) for the Remote UI. – ON (PORT NO.) – OFF

SYSTEM SETTINGS	
8. SET IP ADD RANGE	Sets whether to restrict the range of IP addresses.
OFF	Disables restriction of IP address of computers.
ON	Enables restriction of IP address of computers from which data (print/fax jobs) can be sent to the machine.
1. PERMIT/REJECT	Selects whether to permit or reject access from a specified IP address. – REJECT – PERMIT
2. SET IP ADDRESS	Specifies the IP address range. <START IP ADDRESS> and <END IP ADDRESS> must be entered for each setting. – 1. IP ADDRESS 1 – 2. IP ADDRESS 2 – 3. IP ADDRESS 3 – 4. IP ADDRESS 4
9. RX MAC ADD SET.	Sets whether to activate a MAC address filter.
OFF	Disables MAC address filter.
ON	Specifies a MAC address filter to access. MAC address must be entered for each setting. – 1. PERMIT RX ADD1 – 2. PERMIT RX ADD2 – 3. PERMIT RX ADD3 – 4. PERMIT RX ADD4 – 5. PERMIT RX ADD5

SYSTEM SETTINGS	
2. SNMP SETTINGS	Sets detailed information about SNMP.
1. USE SNMP	Sets whether to activate SNMP. – ON (PORT NO.) – OFF
2. COMMUNITY NAME 1	Sets SNMP community name 1.
3. COMMUNITY NAME 2	Sets SNMP community name 2.
4. SNMP WRITABLE 1	Enables computers on the network to access the machine and modify its settings. – ON – OFF
5. SNMP WRITABLE 2	Enables computers on the network to access the machine and modify its settings. – OFF – ON
3. DEDICATED PORT	Sets or browses detailed information on the machine with a Canon printer driver or utility. – ON – OFF

SYSTEM SETTINGS	
4. ETHERNET DRIVER	Specifies the type of network connection.
1. AUTO DETECT	Selects the detection method of Ethernet driver.
AUTO	Sets the machine to determine the communication mode (Half duplex/Full duplex) and Ethernet type (10Base-T/ 100Base-TX) automatically.
MANUAL	Sets the communication mode and Ethernet type manually.
1. DUPLEX	Selects the communication mode. – HALF DUPLEX – FULL DUPLEX
2. ETHERNET TYPE	Selects the Ethernet type. – 10 BASE-T – 100 BASE-TX
5. VIEW IP ADDRESS	Checks the current network settings.
1. IP ADDRESS	Checks the IP address.
2. SUBNET MASK	Checks the subnet mask.
3. GATEWAY ADDRESS	Checks the gateway address.
6. STARTUP TIME SET.	Sets the time period required to delay the startup of network communications for the machine (0-300 sec.).

SYSTEM SETTINGS	
3. COMMUNICATIONS*	Sets the facsimile communication.
1. TX START SPEED	Sets the transmission speed for all sent documents. (33600 bps, 2400 bps, 4800 bps, 7200 bps, 9600 bps, 14400 bps)
2. RX START SPEED	Sets the transmission speed for all receivable documents. (33600 bps, 2400 bps, 4800 bps, 7200 bps, 9600 bps, 14400 bps)
3. MEMORY LOCK	Sets whether to receive and store all documents in memory and not to print automatically. (See Chapter 1, “Advanced Fax Features,” in the Advanced Guide.)
OFF	Disables memory reception.
ON	Enables memory reception.
1. PASSWORD	Registers the password that protects the authority for accessing to memory.
2. REPORT PRINT	Sets whether to print a report on memory reception. – OFF – ON
3. MEMORY RX TIME	Sets whether to set a period for memory reception.
OFF	Disables setting a period of memory reception.
ON	Enables setting a period of memory reception.
1. MEM RX START TIME	Enters the start time.
2. MEM. RX END TIME	Enters the end time.

SYSTEM SETTINGS	
4. REMOTE UI****	Sets whether to activate the Remote UI function to operate the machine and change settings. – ON – OFF
5. ACCESS TO DEST.*	Sets restriction of the access to destinations.
1. RESTRICT NEW ADD.	Sets whether to restrict registering or changing destinations for one-touch and coded speed dialing. Sets whether to restrict making calls to the destinations not registered for the speed dialing. – OFF – ON*1 *1 You can still make calls using an external phone if all of the following conditions are met: • The machine is in Sleep mode • <RX MODE> is set to <FaxOnly> • <ENERGY IN SLEEP> is set to <LOW>
2. FAX DRIVER TX	Sets whether to restrict sending faxes from a computer using the fax driver. – ON – OFF
6. CHECKING THE LOG	Sets whether to allow displaying the log.
ON	Enables confirmation of logs using [System Monitor].
OFF	Disables confirmation of logs using [System Monitor]. Activity Report will not be printed automatically.
7. USE DEVICE USB	Sets whether to restrict jobs through the USB interface. – ON – OFF

* MF6550/MF6560/MF6580 Only
**** MF6580 Only

14 Appendix

Specifications

General	
● **Type**	Personal Desktop
● **Power Source**	120 V-127 V, 50/60 Hz (Power requirements differ depending on the country in which you purchased the product.)
● **Power Consumption**	Approx. 780 W (max.)
● **Warm-up Time**	MF6530/MF6531/MF6550: less than 13.5 sec.* MF6560/MF6580: less than 16.0 sec.* (temperature: 68°F (20°C), humidity: 65%; from when the machine turns on the power main switch until the standby display appears) * Warm-up time may differ depending on the condition and environment of the machine.
● **Weight**	Approx. 52.2 lb (23.7kg) (including toner cartridge)
● **Dimensions**	17 7/8" (H) x 18" (D) x 20 1/2" (W) (453 mm (H) x 457 mm (D) x 520 mm (W)) 22 7/8" (H) x 18" (D) x 20 1/2" (W) (581 mm (H) x 457 mm (D) x 520 mm (W)) (with optional cassette)
● **Installation Space**	38 3/4" (D) x 40 3/8" (W) (984 mm (D) x 1027 mm (W))
● **Environmental Conditions**	Temperature:59°F–86°F (15°C–30°C) Humidity: 10%–80% RH
● **Display Languages**	English/French/Spanish/Portuguese
● **Acceptable Documents**	» p. 2-1.

General	
● **Acceptable Paper Stock**	» p. 3-1.
● **Printable Area**	» p. 3-3.
● **Scanning Area**	» p. 2-3.

Copier	
● **Scanning Resolution**	600 dpi x 600 dpi
● **Printing Resolution**	1200 dpi enhanced x 600 dpi
● **Magnification**	1:1 ± 1.0%, 1:2.000, 1:1.290, 1:0.780, 1:0.640, 1:0.500 Zoom 0.500 - 2.000, 1% increments* * Not available for MF6531
● **First Copy Time**	Platen glass: less than 8 sec. (LTR) ADF: less than 12 sec. (LTR)
● **Copy Speed**	Direct: LTR 23 cpm
● **No. of Copies**	Max. 99 copies

Printer	
● **Printing Method**	Indirect electrostatic method (On-demand fixing)
● **Paper Handling**	– Paper cassette: 500 sheets x 1 cassette (22 lb (80 g/m^2)) – Multi-purpose tray: 100 sheets (22 lb (80 g/m^2))
● **Paper Delivery**	100 sheets (18 to 22 lb (64 to 80 g/m^2))
● **Print Speed**	See “Copy Speed,” on p. 14-2.
● **Printing Resolution**	1200 dpi enhanced x 600 dpi
● **Number of Tones**	256
● **Printing Cartridge**	» p. 1-7.

Facsimile (MF6550/MF6560/MF6580 Only)	
● **Applicable Line**	Public Switched Telephone Network (PSTN)*1
● **Compatibility**	G3
● **Data Compression Schemes**	MH, MR, MMR, JBIG
● **Modem Speed**	33.6 Kbps Automatic fallback
● **Transmission Speed**	Approx. 3 seconds/page*2 at 33.6 Kbps, ECM-JBIG, transmitting from the memory
● **Transmission/ Reception Memory**	MF6550: Maximum approx. 256 pages*2 MF6560/MF6580: Maximum approx. 1536 pages*2 (total pages of transmission/reception)

Facsimile (MF6550/MF6560/MF6580 Only)	
● **Fax Resolution**	FINE: 203 pels/in. x 196 lines/in. (8 pels/mm x 7.7 lines/mm) PHOTO: 203 pels/in. x 196 lines/in. (8 pels/mm x 7.7 lines/mm) SUPER FINE: 203 pels/in. x 392 lines/in. (8 pels/mm x 15.4 lines/mm) ULTRA FINE: 406 pels/in. x 392 lines/in. (16 pels/mm x 15.4 lines/mm) STANDARD: 203 pels/in. x 98 lines/in. (8 pels/mm x 3.85 lines/mm)
● **Dialing**	– Speed dialing One-touch speed dialing (23 destinations) Coded speed dialing (100 destinations) Group dialing (122 destinations) Address Book dialing (with Address Book key) – Regular dialing (with numeric keys) – Automatic redialing – Manual redialing (with Redial key) – Sequential broadcast (124 destinations) – Automatic reception – Remote reception by telephone (Default ID: 25) – ACTIVITY REPORT (after every 40 transactions) – TX (Transmission)/RX (Reception) REPORT – TTI (Transmit Terminal Identification)

Telephone (MF6550/MF6560/MF6580 Only)	
● **Connection**	External telephone/answering machine (CNG detecting signal)/data modem

*1 The Public Switched Telephone Network (PSTN) currently supports 28.8 Kbps modem speed or lower, depending on telephone line conditions.

*2 Based on ITU-T Standard Chart No. 1, JBIG standard mode.

NOTE

Specifications are subject to change without notice.

Index

Symbols & Numerics

2 on 1 key 1-4

A

Additional Functions key 1-4
Address Book key 1-5
ADDRESS BOOK SET. 13-18
ADF 1-1, 2-6
ADJUST./CLEANING 13-26
Auto clear time 1-12
Automatic document feeder 1-1

C

CHECK DOCUMENT message 12-1
Cleaning machine 11-1
  Exterior 11-1
  Fuser roller 11-4
  Interior 11-2
  Scanning area 11-5
Cleaning the ADF automatically 11-8
Clear key 1-4
Clearing Jams 12-1
Coded Dial key 1-5, 4-33
Coded speed dialing 4-6
  Deleting 4-21
  Editing 4-18
  Registering 4-15
  Using 4-33
Collate key 1-4
COMMON SETTINGS 13-5
Components 1-1
COPY key 1-3
COPY SETTINGS 13-10
Copying 6-1
Customer support
  Canada xvi
  U.S.A xvi

D

Daylight saving time 1-14
Delayed TX key 1-5
Density
  Copying 6-4
  Faxes 4-5
Density key 1-4
Direct Sending 4-36
Direct TX key 1-5, 4-36
Document
  Jams 12-1
  Loading 2-4
  Requirements 2-1
  Scanned area 2-3
Document delivery tray 1-1
Document feeder tray 1-1

E

Enlarge/Reduce key 1-4
Error codes 12-12
Error indicator 1-4

F

FAX key 1-3
FAX SETTINGS 13-12
Faxes
  Receiving 5-1
  Sending 4-1
Frame Erase key 1-4

G

Group dialing 4-6
- Adding destination 4-26
- Changing name 4-29
- Deleting destination 4-27
- Deleting group 4-30
- Registering 4-23
- Using 4-32

H

Handling xiii

Hook key 1-5, 4-35

I

If a Power Failure Occurs 12-14

If You Cannot Solve a Problem 12-15

Image quality
- Copying 6-3
- Faxes 4-3

Image Quality key 1-4

J

Jam location indicator 1-3, 12-1

Jams
- Document 12-1
- Paper 12-3

L

LCD 1-3, 1-6
- Messages 12-6

Left cover 1-2

Legal 3-1

Letter 3-1

Loading
- Document 2-4
- Envelopes 3-5
- Paper 3-5

Location xiv

M

Machine settings 13-1

Main power switch 1-2

Maintenance xiii, 11-1

Manual Sending 4-34

Menu
- Accessing 13-3
- Setting 13-5

Multi-purpose tray 1-2, 3-5

Multi-purpose tray extension 1-2, 3-6

N

Numeric keys 1-3

O

OK key 1-3

ON/OFF key 1-4

One-touch speed dial keys 1-5

One-touch speed dialing 4-6
- Deleting 4-13
- Editing 4-10
- Registering 4-7
- Using 4-32

Operation panel 1-1, 1-3

P

Paper
- Guidelines 3-4
- Jams 12-3
- Loading 3-5
- Printable area 3-3
- Requirements 3-1

Paper cassette 1-1

Paper delivery tray 1-1

PAPER JAM message 12-3

Paper Select indicator 1-3

Paper select key 1-4

Pause key 1-5

PC Faxing 9-1

Platen glass 1-2, 2-4

Power indicator 1-4
Power supply xv
PRINTER SETTINGS 13-20
Printing 7-1
Processing/Data indicator 1-4

R

Receiving faxes 5-1
Recycling cartridge 11-16
Redial key 1-5
Redistributing toner 11-10
Registering speed dialing 4-6
Remote UI 10-1
REPLACE TONER message 11-10
Replacing toner cartridge 11-10
REPORT SETTINGS 13-28
Reset key 1-3
RX SETTINGS 13-15

S

Safety instructions xiii
SCAN key 1-3
Scan settings
  Copying 6-3
  Faxes 4-3
Scanning 8-1
Scanning area 1-2
Sending faxes 4-1
Setting paper type and size 3-8
  Multi-purpose tray 3-11
  Paper cassette 3-8
Sleep mode 1-9
Slide guides 1-1, 2-6
Slide guides for multi-purpose tray 1-2, 3-7
Specifications 14-1
  Copier 14-2
  Facsimile 14-3
  General 14-1
  Printer 14-3
  Telephone 14-5
Speed dialing 4-6
Standby mode
  Copy 1-6
  Fax 1-6
  Scan 1-6
Start key 1-4
Stop key 1-4
System Monitor key 1-3
SYSTEM SETTINGS 13-30

T

TIMER SETTINGS 13-24
Timer settings 1-9
Tone key 1-4
Toner cartridge 1-7
  Recycling 11-16
  Replacing 11-12
Transcription roller 11-9
Transporting machine 11-22
Troubleshooting 12-1
Two-Sided key 1-4
TX SETTINGS 13-14

U

USER DATA LIST 13-1
  Printing 13-1
Using speed dialing 4-32

V

View Settings key 1-3

Z

Zoom ratio 6-6
Preset zoom 6-6
Zoom designation 6-7

CANON INC.
30-2, Shimomaruko 3-chome, Ohta-ku, Tokyo 146-8501, Japan

CANON U.S.A., INC.
One Canon Plaza, Lake Success, NY 11042, U.S.A.

CANON CANADA INC.
6390 Dixie Road Mississauga, Ontario L5T 1P7, Canada

CANON EUROPA N.V.
Bovenkerkerweg 59-61 1185 XB Amstelveen, The Netherlands

CANON FRANCE S.A.S.
17, quai du Président Paul Doumer 92414 Courbevoie Cedex, France

CANON COMMUNICATION & IMAGE FRANCE S.A.S.
12, rue de l'Industrie 92414 Courbevoie Cedex, France

CANON (U.K.) LTD.
Woodhatch, Reigate, Surrey, RH2 8BF, United Kingdom

CANON DEUTSCHLAND GmbH
Europark Fichtenhain A10, 47807 Krefeld, Germany

CANON ITALIA S.p.A.
Via Milano, 8 20097 San Donato Milanese (MI) Italy

CANON ESPAÑA, S.A.
c/ Joaquín Costa 41, 28002 Madrid, Spain

CANON LATIN AMERICA, INC.
703 Waterford Way Suite 400, Miami, Florida 33126 U.S.A.

CANON AUSTRALIA PTY. LTD
1 Thomas Holt Drive, North Ryde, Sydney, N.S.W. 2113, Australia

CANON CHINA CO.,LTD
15F, North Tower, Beijing Kerry Centre, 1 Guang Hua Road, Chao Yang District, 100020, Beijing, China

CANON SINGAPORE PTE. LTD.
1 HarbourFront Avenue #04-01 Keppel Bay Tower, Singapore 098632

120V

FA7-8174 (020)
© CANON INC. 2006
PRINTED IN JAPAN OR CHINA