Canon

# imageCLASS
# MF4380dn/MF4370dn
# MF4350d

# Basic Operation Guide

Before Using the Machine
Documents and Print Media
Registering Destinations in the Address Book
Copying
Fax
Printing
Scanning
Network
Settings from a PC
Maintenance
Troubleshooting
Machine Settings
Appendix


Please read this guide before operating this product.
After you finish reading this guide, store it in a safe place for future reference.

ENG

# Manuals for the Machine

The manuals for this machine are divided as follows. Please refer to them for detailed information.

Read this manual first.

### Starter Guide

Read this manual to learn the required settings and connections before using the machine.

- Overview of Machine Functions
- Set Up the Machine to Suit Your Purposes
- Set Up the Machine
- Make Fax Settings
- Set Up Network Connection
- Set Up Computers and Software
- Appendix

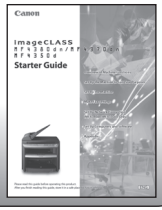


Read this manual next.

This Document

### Basic Operation Guide

Read this manual to learn information about basic operations and machine functions.

- Before Using the Machine
- Documents and Print Media
- Registering Destinations in the Address Book
- Copying
- Fax
- Printing
- Scanning
- Network
- Settings from a PC
- Maintenance
- Troubleshooting
- Machine Settings
- Appendix

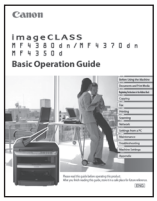


Read the sections of these manuals that correspond to your intended use.

### e-Manual

Read this manual to learn detailed information about advanced machine operations and functions, and how to customize machine settings.

(Located on Manual CD)

- Copy/Fax/Print/Scan/Settings from a PC/ Network Settings/Security
- Troubleshooting
- Maintenance
- Specifications

- Considerable effort has been made to make sure that the manuals for the machine are free of inaccuracies and omissions. However, as we are constantly improving our products, if you need an exact specification, please contact Canon.
- The machine illustration in this manual may differ slightly from your machine.

# Overview of the Machine Functions

**Depending on the system configuration and product purchased, some functions may not be available.**

## Copying

You can use various copy functions.

**Basic Operation Guide**
Copying (see on p. 4-1)

**e-Manual**
Copy

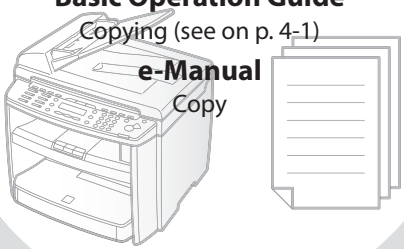

## Faxing

In addition to the normal faxing, you can send faxes from a computer.

**Basic Operation Guide**
Fax (see on p. 5-1)

**e-Manual**
Fax

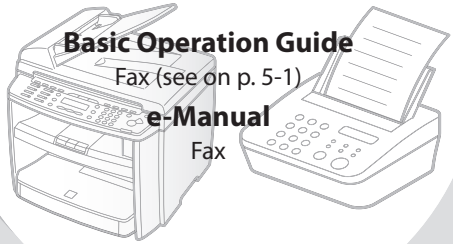

## Printing

You can use various print functions by printing from a computer.

**Basic Operation Guide**
Printing (see on p. 6-1)

**e-Manual**
Print

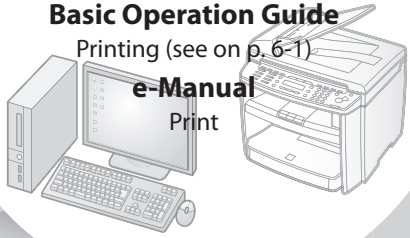

## Scanning

You can retrieve documents scanned with this machine to your computer.

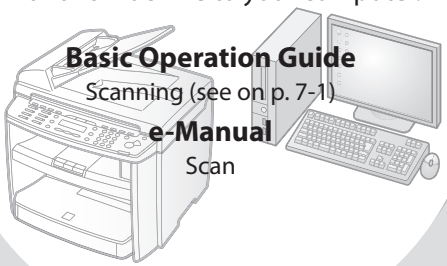

**Basic Operation Guide**
Scanning (see on p. 7-1)

**e-Manual**
Scan

## Network

**(MF4380dn/MF4370dn Only)**

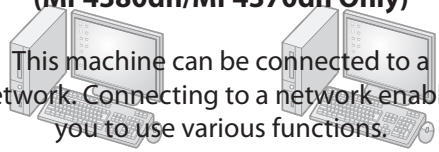

This machine can be connected to a network. Connecting to a network enables you to use various functions.

**Basic Operation Guide**
Network (see on p. 8-1)

**e-Manual**
Network Settings

## Remote User Interface

**(MF4380dn/MF4370dn Only)**

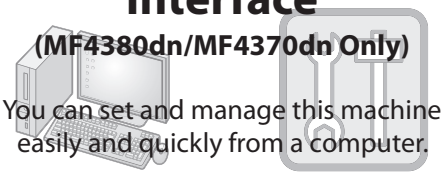

You can set and manage this machine easily and quickly from a computer.

**Basic Operation Guide**
Settings from a PC (see on p. 9-1)

**e-Manual**
Settings from a PC

# Contents

**Manuals for the Machine** ..... i
**Preface** ..... viii
Available Features ..... viii
**How to Use This Guide** ..... ix
Symbols Used in This Manual ..... ix
Keys and Buttons Used in This Manual ..... ix
Abbreviations Used in This Manual ..... ix
Illustrations Used in This Manual ..... x
**Safety Precautions** ..... xi
Important Safety Instructions ..... xi
Handling and Maintenance ..... xi
Location ..... xii
Power Supply ..... xiv
Telephone Equipment ..... xiv
Customer Support (U.S.A.) ..... xiv
Customer Support (Canada) ..... xiv
**Legal Notices** ..... xv
IPv6 Ready Logo ..... xv
Trademarks ..... xv
Copyright ..... xvi
Third Party Software ..... xvii
The Software Subjected to the Other Conditions ..... xviii
Disclaimers ..... xviii
For CA, USA only ..... xviii
Legal Limitations on the Usage of Your Product and the Use of Images ..... xviii
FCC (Federal Communications Commission) ..... xix
Users in the U.S.A. ..... xx
Users in Canada ..... xxii
Utilisation au Canada ..... xxiv
**Laser Safety** ..... xxvi
CDRH Regulations ..... xxvi

**1 Before Using the Machine ..... 1-1**
**Machine Components** ..... 1-2
External View (Front) ..... 1-2
External View (Back) ..... 1-4
**Operation Panel** ..... 1-7
Main Operation Panel ..... 1-7
Fax Operation Panel ..... 1-9
**Display (Standby Mode)** ..... 1-10
Copy Mode ..... 1-10
Fax Mode ..... 1-10
Scan Mode ..... 1-10
**Toner Cartridge** ..... 1-11
Maintaining the Toner Cartridge ..... 1-12
Checking the Toner Level ..... 1-12
**Entering Characters** ..... 1-14
**Telephone Line Settings** ..... 1-15
**Timer Settings** ..... 1-16
Setting the Sleep Mode ..... 1-16
Setting the Daylight Saving Time ..... 1-17

**2 Documents and Print Media ..... 2-1**
**Documents Requirements** ..... 2-2
**Scanning Area** ..... 2-3
**Placing Documents** ..... 2-4
On the Platen Glass ..... 2-4
In the ADF ..... 2-5
**Paper Requirements** ..... 2-6
**Printable Area** ..... 2-7
**Loading Paper** ..... 2-8
In the Paper Cassette ..... 2-8
In the Multi-Purpose Tray ..... 2-11
**Setting Paper Size and Type** ..... 2-14
For the Paper Cassette ..... 2-14
For the Multi-Purpose Tray ..... 2-15

## 3 Registering Destinations in the Address Book.....3-1

**About the Address Book .....3-2**
**Storing/Editing One-Touch Keys .....3-3**
Registering One-Touch Keys ..... 3-3
Editing One-Touch Keys..... 3-3
Erasing One-Touch Keys..... 3-4
**Storing/Editing Coded Dial Codes .....3-6**
Registering Coded Dial Codes ..... 3-6
Editing Coded Dial Codes..... 3-6
Erasing Coded Dial Codes ..... 3-7
**Storing/Editing Recipients for Group Dialing .....3-9**
Registering Group Addresses..... 3-9
Adding New Destination to Group .....3-10
Deleting Destination from Group .....3-10
Changing Group Name .....3-11
Deleting Group Addresses .....3-11

## 4 Copying .....4-1

**Overview of Copy Functions .....4-2**
**Basic Copying Method.....4-4**
**Canceling Copy Jobs .....4-5**
**Selecting Image Quality.....4-6**
**Adjusting Density.....4-8**
Adjusting Automatically ..... 4-8
Adjusting Manually..... 4-9
**Enlarge/Reduce Images ..... 4-10**
Preset Zoom .....4-10
Custom Copy Ratio .....4-11
**Collating Copies..... 4-13**
**Multiple Documents onto One Sheet (2 on 1)..... 4-15**
2 on 1 Combination.....4-15
Copying ID Card.....4-16
**2-Sided Copying ..... 4-18**
1 to 2-Sided Copying.....4-19
2 to 2-Sided Copying (MF4380dn Only).....4-20
2 to 1-Sided Copying (MF4380dn Only).....4-21
**Selecting Paper Size Group ..... 4-22**
**Changing Standard Mode..... 4-23**
**Printing a Sample Page ..... 4-24**
**Viewing Copy Settings ..... 4-25**

## 5 Fax .....5-1

**Overview of Fax Functions .....5-2**
**Introduction to Using Fax Functions .....5-4**
Methods for Receiving Faxes..... 5-4
Selecting the Receive Mode.....5-10
Setting the Current Date and Time.....5-11
Setting the Type of Telephone Line .....5-11
Registering the Machine's Name .....5-12
Registering Your Machine's Fax Number.....5-12
**Sending Fax Documents ..... 5-13**
Basic Methods for Sending Faxes .....5-13
Calling the Recipient before Sending Fax Documents (Manual Sending).....5-13
Switching Temporarily to Tone Dialing...5-14
Dialing an Overseas Number (With Pauses).....5-15
Basic Methods for Sending PC Faxes.....5-16
**Canceling Sending Fax Documents ..... 5-17**
**Specifying Destinations ..... 5-18**
Specifying a New Fax Number.....5-18
Using the One-Touch Keys.....5-19
Using Coded Dial Codes .....5-19
Using the Group Addresses .....5-20
Using the Address Book Key.....5-20
Sending Documents to More Than One Location (Broadcasting).....5-21
**Adjusting Density..... 5-23**
**Selecting Image Quality..... 5-24**
**2-Sided Document (MF4380dn Only)..... 5-25**
**Redialing When the Line Is Busy..... 5-26**
Redialing Manually .....5-26
Redialing Automatically.....5-26

Checking the Dial Line before Sending.. 5-28
Changing Standard Mode..... 5-29
Send Start Speed ..... 5-30
Printing Received Documents on Both Sides of Paper..... 5-31
Reducing a Received Document..... 5-32
Printing Footer Information on a Received Document..... 5-33
Specifying the Way of Printing When Toner Runs Out ..... 5-34
Setting the Incoming Ring..... 5-35
Receiving Documents Manually with an External Telephone (Remote RX)..... 5-36
Activating the Remote Reception .....5-36
Receiving Documents with the Remote Reception .....5-37
Selecting the Receive Mode for Printing..... 5-38
Rejecting Incoming Faxes from the Unidentified Senders..... 5-39
Receive Start Speed ..... 5-40
Receiving Documents in Memory without Printing Out (Memory Lock Reception)..... 5-41
Printing All Documents Stored in the Memory Lock Reception Mode..... 5-43
Forwarding Received Fax Documents in Memory ..... 5-44
Checking/Changing the Status of Fax Documents in Memory..... 5-45
Checking/Deleting Fax Transmission Documents .....5-45
Checking/Deleting Fax Reception Documents .....5-46
Checking the Fax Log.....5-46

6 Printing .....6-1
Overview of the Print Functions.....6-2
Introduction to Using Print Functions.....6-4
Printing Documents from a Computer.....6-5
Scaling Documents .....6-7
Printing Multiple Pages on One Sheet .....6-9
2-Sided Printing..... 6-10
Checking and Canceling Print Jobs..... 6-11

7 Scanning .....7-1
Overview of Scanner Functions.....7-2
Introduction to Using Scanner Functions.....7-3
For Scanning Documents to a Computer Connected with USB Cable..... 7-3
For Scanning Documents from a Networked Computer (MF4380dn/MF4370dn Only) ..... 7-3
Basic Scanning Operations.....7-4
Scanning Documents to a Computer Connected with USB Cable..... 7-4
Scanning Documents from a Networked Computer (MF4380dn/MF4370dn Only)..... 7-4
Canceling Scan Jobs to a Computer Connected with USB Cable..... 7-5

8 Network (MF4380dn/MF4370dn Only) .....8-1
Flowchart for Setting Up Network .....8-2
What is the Network?.....8-3
Overview of Network Functions.....8-4

9 Settings from a PC (MF4380dn/MF4370dn Only) .....9-1
Overview of Remote UI .....9-2
Starting the Remote UI.....9-4

10 Maintenance .....10-1
Cleaning the Machine..... 10-2

Exterior ..... 10-2
Interior ..... 10-2
Fuser Roller ..... 10-5
Scanning Area ..... 10-6
**Replacing the Toner Cartridge ..... 10-9**
When a Message Appears ..... 10-9
Redistributing Toner ..... 10-10
Replacing the Toner Cartridge with a New One ..... 10-12
**Recycling Used Cartridges ..... 10-17**
The Clean Earth Campaign - The Canon Cartridge Return Program ..... 10-17
U.S.A. PROGRAM ..... 10-18
Canadian Program – Programme au Canada ..... 10-21
**Transporting the Machine ..... 10-23**
For MF4380dn/MF4370dn ..... 10-23
For MF4350d ..... 10-26

## 11 Troubleshooting .....11-1

**Clearing Jams ..... 11-2**
Document Jams ..... 11-2
Paper Jams ..... 11-5
**Error Messages ..... 11-16**
**Error Codes ..... 11-19**
**If <LOAD CORRECT PAPER> is displayed ..... 11-20**
Reloading the Paper ..... 11-20
Changing the Paper Size Setting ..... 11-20
**If a Power Failure Occurs ..... 11-21**
**If You Cannot Solve a Problem ..... 11-22**
Customer Support (U.S.A.) ..... 11-22
Customer Support (Canada) ..... 11-22

## 12 Machine Settings .....12-1

**Machine Settings ..... 12-2**
Printing USER DATA LIST ..... 12-2
Accessing the Setting Menu ..... 12-2
**Setting Menu ..... 12-3**
VOLUME CONTROL SETTINGS ..... 12-3
BROADCAST ..... 12-3
COMMON SETTINGS ..... 12-3
COPY SETTINGS ..... 12-4
FAX SETTINGS ..... 12-5
ADDRESS BOOK SET ..... 12-6
PRINTER SETTINGS ..... 12-6
TIMER SETTINGS ..... 12-7
ADJUST./CLEANING ..... 12-8
REPORT SETTINGS ..... 12-8
SYSTEM SETTINGS ..... 12-9

## 13 Appendix .....13-1

**Specifications ..... 13-2**
General ..... 13-2
Copier ..... 13-3
Printer ..... 13-3
Scanner (Scanning via USB) ..... 13-3
Scanner (Scanning via Network) ..... 13-3
Facsimile ..... 13-4
Telephone ..... 13-4
**Index ..... 13-5**

# Preface

**Thank you for choosing a Canon product. Before using the machine, please read the following instructions for your safety.**

## Available Features

The procedures described in this manual are based on the imageCLASS MF4370dn. Depending on the system configuration and product purchased, some features described in the manuals may not be functional. The table below shows the available features on a product basis.

✔: available
—: not available

| | COPY | PRINT | SCAN | FAX | Remote UI (Network Board) | Simplex ADF | Duplex ADF |
|---|---|---|---|---|---|---|---|
| imageCLASS MF4380dn | ✔ | ✔ | ✔ | ✔ | ✔ | — | ✔ |
| imageCLASS MF4370dn | ✔ | ✔ | ✔ | ✔ | ✔ | ✔ | — |
| imageCLASS MF4350d | ✔ | ✔ | ✔ | ✔ | — | ✔ | — |

# How to Use This Guide

## Symbols Used in This Manual

The following symbols are used in this manual to explain procedures, restrictions, handling precautions, and instructions that should be observed for safety.

**WARNING** Indicates a warning that may lead to death or serious injury if not observed.

**CAUTION** Explains how to avoid actions that could injure you or damage your machine.

**NOTE** Explains operating restrictions and how to avoid minor difficulties.

## Keys and Buttons Used in This Manual

The following symbols and key names are a few examples of how keys to be pressed are expressed in this manual.

- Operation Panel Keys: <Key icon> + [Key name]
  Example: [Stop/Reset].
- Buttons on the computer operation screen: [Button name]
  Example: [OK]
- Information in the display appears in angle brackets: <LOAD PAPER>.

## Abbreviations Used in This Manual

In this manual, product names and model names are abbreviated as follows:
Microsoft Windows 2000 operating system : Windows 2000
Microsoft Windows XP operating system : Windows XP
Microsoft Windows Vista operating system : Windows Vista
Microsoft Windows 7 operating system : Windows 7
Microsoft Windows Server 2003 operating system : Windows Server 2003
Microsoft Windows Server 2008 operating system : Windows Server 2008
Microsoft Windows operating system : Windows

# Illustrations Used in This Manual

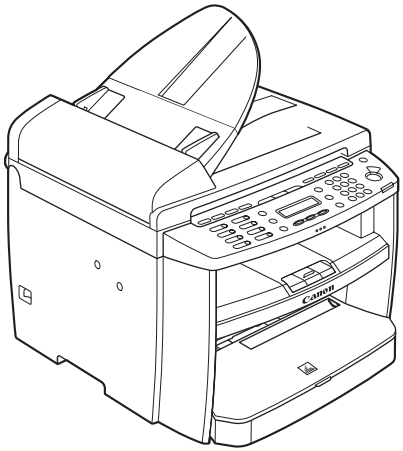

Illustrations used in this manual are the model MF4370dn. When there is any difference among MF4380dn, MF4370dn and MF4350d, it is clearly indicated in the text, e.g., "For MF4370dn."
For information on the standard features for each model, see "Available Features," on p. viii.

The display used in this manual is the factory preset display for the MF4370dn in default setting. Depending on the system configuration and product purchased, the appearance of the display may differ.

# Safety Precautions

## Important Safety Instructions

**WARNING**

Except as specifically described in this guide, do not attempt to service the machine yourself. Never attempt to disassemble the machine: opening and removing its interior covers will expose you to dangerous voltages and other risks. For all service, contact your local authorized Canon dealer.

## Handling and Maintenance

**CAUTION**

Be careful when removing printed paper from output trays or when aligning it, because it may be hot and result in burn injury.

- Follow all warnings and instructions marked on the machine.
- Do not subject the machine to strong physical shocks or vibrations.
- Always unplug the machine before moving or cleaning it.
- To avoid paper jams, never unplug the power cord, open the left cover or add or remove paper in the machine while printing.
- When transporting the machine, be sure to remove the toner cartridge from the machine.
- Place the toner cartridge in its original protective bag or wrap it in a thick cloth to prevent exposure to light.
- Always grip the handle on the sides of the machine when you lift the machine. Never lift the machine by any of its trays or attachments.
- Do not insert any objects into the slots or openings on the machine since they may touch dangerous voltage points or short out parts. This could result in fire or electric shock.
- Do not allow small objects (such as pins, paper clips, or staples) to fall into the machine.
- To avoid spillage in or around the machine, do not eat or drink near it.
- Keep the machine clean. Dust accumulation can prevent the machine from operating properly.
- Toner cartridge for this machine will be available for at least seven (7) years (or any such longer period as required by applicable laws) after production of this machine model has been discontinued.
- Unplug the machine from the wall outlet and contact your local authorized Canon dealer in any of the following cases:
  - When the power cord or plug is damaged or frayed.
  - If liquid or small object has fallen into the machine.
  - If the machine has been exposed to rain or water.
  - If the machine does not operate normally when you have followed the instructions in this guide. Adjust only those controls that are covered by the instructions in this guide. Improper adjustment of other controls may result in damage and may require extensive work by a qualified technician to restore the product to normal operation.
  - If the machine has been dropped.
  - If the machine exhibits a distinct change in performance, indicating a need for servicing.

- Do not place your hands, hair, clothing, etc., near the exit and feed rollers. Even if the machine is not in operation, your hands, hair, or clothing may get caught in the rollers, which may result in personal injury or damage if the machine suddenly starts printing.
- Be careful when removing printed paper from paper delivery tray or when aligning it, because it may be hot and result in burn injury.

## Location

- Place the machine on a flat, stable, vibration-free surface that is strong enough to support its weight.
- Place the machine in a cool, dry, clean, well ventilated place.
- Make sure the area is free from dust.
- Make sure the location is not exposed to high temperature or humidity.
- Keep the machine away from direct sunlight as this can damage it. If you have to place the machine near a window, install heavy curtains or blinds.
- Do not use the machine near water. Make sure that no wet or humid objects come into contact with the machine.
- Do not use or store the machine outdoors.
- Do not place the machine near devices that contain magnets or generate magnetic fields, such as speakers.
- If possible, place the machine near an existing telephone line outlet for easy connection of the telephone line cord, and to avoid the expense of installing a new outlet.
- Place the machine near a standard 120 V AC (60 Hz) power outlet.
- To ensure reliable operation of the machine and to protect it from overheating (which can cause it to operate abnormally and create a fire risk), do not block the exhaust vent. Never block or cover any openings on the machine by placing it on a bed, sofa, rug, or other similar surface. Do not place the machine in a cupboard or built-in installation, or near a radiator or other heat source unless proper ventilation is provided. Leave at least 4" (100 mm) around all sides of the machine.

● MF4380dn

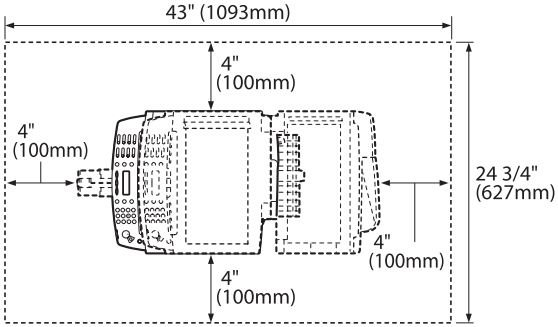


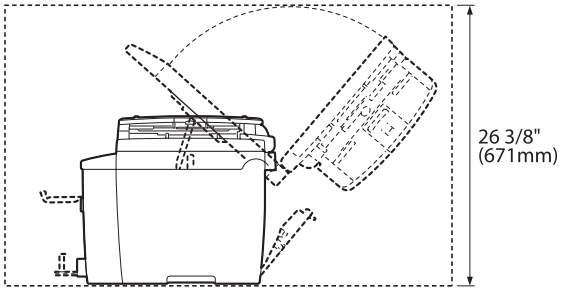


● MF4370dn

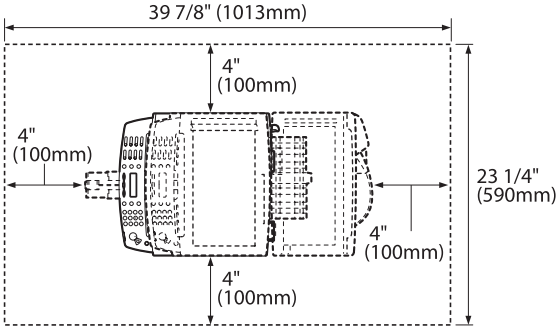


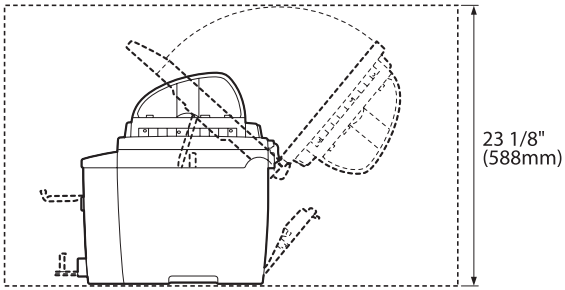


● MF4350d

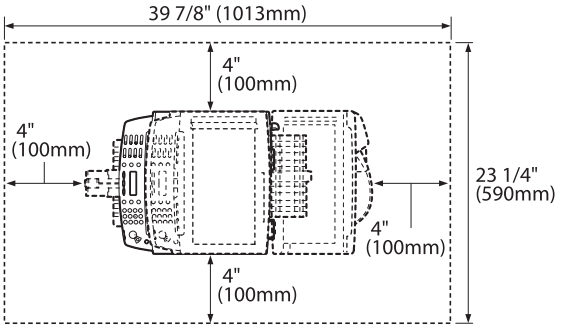


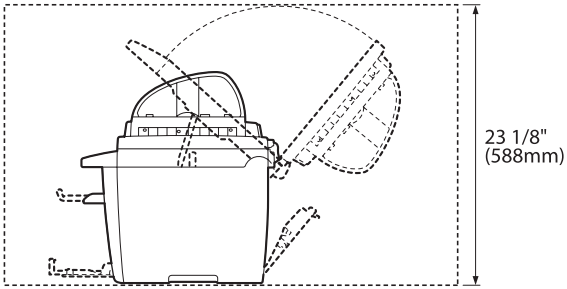


– Do not stack boxes or furniture around the power outlet. Keep the area free so you can reach the outlet quickly. If you notice anything unusual (smoke, strange odors, noises) around the machine, unplug the power cord immediately. Contact your local authorized Canon dealer.
– Do not allow anything to rest on the power cord, and do not place the machine where the cord will be walked on. Make sure the cord is not knotted or kinked.

## Power Supply

- During electrical storms, unplug the power cord from the power outlet. (Any sent or received documents stored in memory are backed up for about 5 minutes.)
- Whenever you unplug the power cord, wait at least five seconds before you plug it in again.
- Do not plug the power cord into an uninterruptible power supply (UPS).

**WARNING**

This product emits low level magnetic flux. If you use a cardiac pacemaker and feel abnormalities, please move away from this product and consult your doctor.



## Telephone Equipment

**WARNING**

When using telephone equipment, basic safety precautions should always be followed to reduce the risk of fire, electric shock, and injury to persons, including the following:

1. Do not use this machine near water (i.e., near a bathtub, kitchen sink, or laundry tub), or in a wet basement or near a swimming pool.
2. Avoid using the telephone during an electrical storm, as there may be a remote risk of electric shock from lightning.
3. Do not use the telephone to report a gas leak in the vicinity of the leak.

## Customer Support (U.S.A.)

Your machine is designed with the latest technology to provide trouble-free operation. If you encounter a problem with the machine's operation, try to solve it by using the information in Chapter 11. If you cannot solve the problem or if you think your machine needs servicing, contact Canon Customer Care Center at 1-800-OK-CANON between the hours of 8:00 A.M. to 8:00 P.M. EST Monday through Friday. On-line support for 24 hours is also available at the website.
http://www.canontechsupport.com/

## Customer Support (Canada)

Canon Canada Inc., offers a full range of customer technical support options*:

- For step-by-step troubleshooting, e-mail technical support, the latest driver or document downloads, and answers to frequently asked questions, visit http://www.canon.ca/
- Free live technical support 9 A.M. to 8 P.M. EST Monday through Friday (excluding holidays) for products still under warranty 1-800-652-2666
- For the location of the authorized service facility nearest you, visit http://www.canon.ca/ or 1-800-652-2666
- If the problem cannot be corrected by using one of the above technical support options, repair options are available at the time of your call to the live technical support number above or via the website at http://www.canon.ca/

*Support program specifics are subject to change without notice.

# Legal Notices

As an ENERGY STAR Partner, Canon U.S.A., Inc. has determined that this product meets the ENERGY STAR Program for energy efficiency.

The International ENERGY STAR Office Equipment Program is an international program that promotes energy saving through the use of computers and other office equipment.

The program backs the development and dissemination of products with functions that effectively reduce energy consumption. It is an open system in which business proprietors can participate voluntarily.

The targeted products are office equipment, such as computers, displays, printers, facsimiles, and copiers. The standards and logos are uniform among participating nations.

## IPv6 Ready Logo

The protocol stack included in this machine has obtained the IPv6 Ready Logo Phase-1 established by the IPv6 Forum.

## Trademarks

Canon, the Canon logo, imageCLASS, and NetSpot are trademarks of Canon Inc. Microsoft, Windows, Windows Server, and Windows Vista are trademarks or registered trademarks of Microsoft Corporation in the U.S. and/or other countries.
All other product and brand names are registered trademarks, trademarks or service marks of their respective owners.

## Copyright

Copyright © 2010 by Canon Inc. All rights reserved. No part of this publication may be reproduced, transmitted, transcribed, stored in a retrieval system, or translated into any language or computer language in any form or by any means, electronic, mechanical, magnetic, optical, chemical, manual, or otherwise, without the prior written permission of Canon Inc.

This product contains software made available to Canon Inc. or its licenser(s) under the terms (a) through (c) listed below.



(a)

Copyright © 1990 The Regents of the University of California.
All rights reserved.

Redistribution and use in source and binary forms are permitted provided that the above copyright notice and this paragraph are duplicated in all such forms and that any documentation, advertising materials, and other materials related to such distribution and use acknowledge that the software was developed by the University of California, Berkeley. The name of the University may not be used to endorse or promote products derived from this software without specific prior written permission.
THIS SOFTWARE IS PROVIDED "AS IS" AND WITHOUT ANY EXPRESS OR IMPLIED WARRANTIES, INCLUDING, WITHOUT LIMITATION, THE IMPLIED WARRANTIES OF MERCHANTABILITY AND FITNESS FOR A PARTICULAR PURPOSE.

The software was developed by the University of California, Berkeley.

(b)

Copyright © 1995, 1996 Cygnus Support.
All rights reserved.

Redistribution and use in source and binary forms are permitted provided that the above copyright notice and this paragraph are duplicated in all such forms and that any documentation, advertising materials, and other materials related to such distribution and use acknowledge that the software was developed at Cygnus Support, Inc. Cygnus Support, Inc. may not be used to endorse or promote products derived from this software without specific prior written permission.
THIS SOFTWARE IS PROVIDED "AS IS" AND WITHOUT ANY EXPRESS OR IMPLIED WARRANTIES, INCLUDING, WITHOUT LIMITATION, THE IMPLIED WARRANTIES OF MERCHANTABILITY AND FITNESS FOR A PARTICULAR PURPOSE.

The software was developed at Cygnus Support, Inc.

(c)

Copyright © 1994, 1997 Cygnus Solutions.
All rights reserved.

Redistribution and use in source and binary forms are permitted provided that the above copyright notice and this paragraph are duplicated in all such forms and that any documentation, advertising materials, and other materials related to such distribution and use acknowledge that the software was developed at Cygnus Solutions. Cygnus Solutions may not be used to endorse or promote products derived from this software without specific prior written permission.
THIS SOFTWARE IS PROVIDED "AS IS" AND WITHOUT ANY EXPRESS OR IMPLIED WARRANTIES, INCLUDING, WITHOUT LIMITATION, THE IMPLIED WARRANTIES OF MERCHANTABILITY AND FITNESS FOR A PARTICULAR PURPOSE.

The software was developed at Cygnus Solutions.

## Third Party Software

This product includes software and/or software modules that are licensed by third parties (LICENSORS). Use and distribution of this software and/or software modules (the "SOFTWARE") are subject to conditions (1) through (9) below unless the other conditions accompany the software and/or software module. In such cases, these software and/or software module are subject to the other conditions.

(1) You agree that you will comply with any applicable export control laws, restrictions or regulations of the countries involved in the event that the SOFTWARE is shipped, transferred or exported into any country.
(2) LICENSORS retain in all respects the title, ownership and intellectual property rights in and to the SOFTWARE. Except as expressly provided herein, no license or right, expressed or implied, is hereby conveyed or granted by Canon's licenser to you for any intellectual property of LICENSORS.
(3) You may use the SOFTWARE solely for use with the Canon product you purchased (the "PRODUCT").
(4) You may not assign, sublicense, market, distribute, or transfer the SOFTWARE to any third party without prior written consent of Canon and LICENSORS.
(5) Notwithstanding the foregoing, you may transfer the SOFTWARE only when (a) you assign all of your rights to the PRODUCT and all rights and obligations under the conditions to transferee and (b) such transferee agrees to be bound by all these conditions.
(6) You may not decompile, reverse engineer, disassemble or otherwise reduce the code of the SOFTWARE to human readable form.
(7) You may not modify, adapt, translate, rent, lease or loan the SOFTWARE or create derivative works based on the SOFTWARE.
(8) You are not entitled to remove or make separate copies of the SOFTWARE from the PRODUCT.
(9) The human-readable portion (the source code) of the SOFTWARE is not licensed to you.

## The Software Subjected to the Other Conditions

Please refer to e-Manual on a CD-ROM bundled with this product, for more detail and corresponding license conditions.

## Disclaimers

The information in this document is subject to change without notice.
CANON INC. MAKES NO WARRANTY OF ANY KIND WITH REGARD TO THIS MATERIAL, EITHER EXPRESS OR IMPLIED, EXCEPT AS PROVIDED HEREIN, INCLUDING WITHOUT LIMITATION, THEREOF, WARRANTIES AS TO MARKETABILITY, MERCHANTABILITY, FITNESS FOR A PARTICULAR PURPOSE OF USE OR NON-INFRINGEMENT. CANON INC. SHALL NOT BE LIABLE FOR ANY DIRECT, INCIDENTAL, OR CONSEQUENTIAL DAMAGES OF ANY NATURE, OR LOSSES OR EXPENSES RESULTING FROM THE USE OF THIS MATERIAL.

## For CA, USA only

Included battery contains Perchlorate Material - special handling may apply.
See http://www.dtsc.ca.gov/hazardouswaste/perchlorate/ for details.

## Legal Limitations on the Usage of Your Product and the Use of Images

Using your product to scan, print or otherwise reproduce certain documents, and the use of such images as scanned, printed or otherwise reproduced by your product, may be prohibited by law and may result in criminal and/or civil liability.
A non-exhaustive list of these documents is set forth below. This list is intended to be a guide only. If you are uncertain about the legality of using your product to scan, print or otherwise reproduce any particular document, and/or of the use of the images scanned, printed or otherwise reproduced, you should consult in advance with your legal advisor for guidance.

- Paper Money
- Money Orders
- Certificates of Deposit
- Postage Stamps (canceled or uncanceled)
- Identifying Badges or Insignias
- Selective Service or Draft Papers
- Checks or Drafts Issued by Governmental Agencies
- Motor Vehicle Licenses and Certificates of Title
- Travelers Checks
- Food Stamps
- Passports
- Immigration Papers
- Internal Revenue Stamps (canceled or uncanceled)
- Bonds or Other Certificates of Indebtedness
- Stock Certificates
- Copyrighted Works/Works of Art without Permission of Copyright Owner

## FCC (Federal Communications Commission)

imageCLASS MF4380dn/MF4370dn/MF4350d: F156602

This device complies with Part 15 of the FCC Rules. Operation is subject to the following two conditions:

(1) This device may not cause harmful interference,

and

(2) this device must accept an interference received, including interference that may cause undesired operation.

This equipment has been tested and found to comply with the limits for a class B digital device, pursuant to Part 15 of the FCC Rules. These limits are designed to provide reasonable protection against harmful interference in a residential installation. This equipment generates, uses and can radiate radio frequency energy and, if not installed and used in accordance with the instructions, may cause harmful interference to radio communications. However, there is no guarantee that interference will not occur in a particular installation. If this equipment does cause harmful interference to radio or television reception, which can be determined by turning the equipment off and on, the user is encouraged to try to correct the interference by one or more of the following measures:

- Reorient or relocate the receiving antenna.
- Increase the separation between the equipment and receiver.
- Connect the equipment into an outlet on a circuit different from that to which the receiver is connected.
- Consult the dealer or an experienced radio/TV technician for help.

Use of shielded cable is required to comply with class B limits in Subpart B of Part 15 of FCC Rules.
Do not make any changes or modifications to the equipment unless otherwise specified in this manual. If you make such changes or modifications, you could be required to stop operation of the equipment.
If your equipment malfunctions, please contact your local authorized Canon dealer from whom you purchased the equipment (if under warranty), or with whom you have a servicing contact. If you are not sure who to contact, and have both purchased and are using the equipment in the U.S.A., please refer to the "SUPPORT" page on Canon U.S.A.'s Web site (http://www.usa.canon.com).

Canon U.S.A., Inc.
One Canon Plaza, Lake Success, NY 11042, U.S.A.
TEL No. (516)328-5600

# Users in the U.S.A.

Pre-Installation Requirements for Canon Facsimile Equipment

**A. Location**

Supply a suitable table, cabinet, or desk for the machine. See Chapter 13, "Appendix," for specific dimensions and weight.

**B. Order Information**

1. A single telephone line (touch-tone or rotary) should be used.
2. Order an RJ11-C telephone wall jack (USOC), which should be installed by the telephone company. If the RJ11-C wall jack is not present, telephone/facsimile operation is not possible.
3. Order a normal business line from your telephone company's business representative. The line should be a regular voice grade line or an equivalent one. Use one line per unit.

   DDD (Direct Distance Dial) line

   -or-

   IDDD (International Direct Distance Dial) line if you communicate overseas

**NOTE**

Canon recommends an individual line following industry standards, i.e., 2,500 (touch-tone) or 500 (rotary/pulse dial) telephones. A dedicated extension off a PBX (Private Branch eXchange) unit without "Call Waiting" can be used with your facsimile unit. Key telephone systems are not recommended because they send nonstandard signals to individual telephones for ringing and special codes, which may cause a facsimile error.

**C. Power Requirements**

The machine should be connected to a standard 120 volt AC, three-wire grounded outlet only.

Do not connect this machine to an outlet or power line shared with other appliances that cause "electrical noise." Air conditioners, electric typewriters, copiers, and machines of this sort generate electrical noise that often interferes with communications equipment and the sending and receiving of documents.

**Connection of the Equipment**

This equipment complies with Part 68 of the FCC rules and the requirements adopted by the ACTA. On the rear panel of this equipment is a label that contains, among other information, a product identifier in the format of US:AAAEQ##TXXXX. If requested, this number must be provided to the telephone company.

The REN (Ringer Equivalence Number) is used to determine the number of devices that may be connected to a telephone line. Excessive RENs on a telephone line may result in the devices not ringing in response to an incoming call. In most, but not all areas, the sum of the RENs should not exceed five (5.0). To be certain of the number of devices that may be connected to a line, as determined by the total RENs, contact the local telephone company. The REN for this product is part of the product identifier that has the format US: AAAEQ##TXXXX. The digits represented by ## are the REN without a decimal point (e.g., 10 is a REN of 1.0).

An FCC compliant telephone line cable and modular plug is provided with this equipment. This equipment is designed to be connected to the telephone network or premise wiring using a compatible modular jack that is Part 68 compliant.

This equipment may not be used on coin service provided by the telephone company. Connection to party lines is subjected to state tariffs.

**In Case of Equipment Malfunction**

Should any malfunction occur which cannot be corrected by the procedures described in this guide or the e-Manual, disconnect the equipment from the telephone line cable and disconnect the power cord.
The telephone line cable should not be reconnected or the main power switch turned ON until the problem is completely resolved. Users should contact their local authorized Canon Facsimile Service Dealer for the servicing of equipment.

If your equipment malfunctions, please contact your local authorized Canon dealer from whom you purchased the equipment (if under warranty), or with whom you have a servicing contract. If you are not sure who to contact, and have both purchased and are using the equipment in the U.S.A., please refer to the "SUPPORT" page on Canon U.S.A.'s Web site (http://www.usa.canon.com).

**Rights of the Telephone Company**

If this equipment (imageCLASS MF4380dn/MF4370dn/MF4350d) causes harm to the telephone network, the telephone company may temporarily disconnect service. The telephone company also retains the right to make changes in facilities and services that may affect the operation of this equipment. When such changes are necessary, the telephone company is required to give adequate prior notice to the user.
However, if advance notice is not possible, the telephone company will notify the customer as soon as possible. Also, the customer will be advised of his/her right to file a complaint with the FCC if he/she believes it is necessary.

**WARNING**

The Telephone Consumer Protection Act of 1991 makes it unlawful for any person to use a computer or other electronic device, including FAX machines, to send any message unless such message clearly contains in a margin at the top or bottom of each transmitted page or on the first page of the transmission, the date and time it is sent and an identification of the business or other entity, or other individual sending the message and the telephone number of the sending machine or such business, other entity, or individual. (The telephone number provided may not be a 900 number or any other number for which charges exceed local or long-distance transmission charges.)

**NOTE**

In order to program this information into your machine, you should complete the procedure for registering your name, unit's telephone number, time, and date in the Starter Guide.



## Users in Canada

Pre-Installation Requirements for Canon Facsimile Equipment

**A. Location**

Supply a suitable table, cabinet, or desk for the machine. See Chapter 13, "Appendix," for specific dimensions and weight.

**B. Order Information**

1. A single telephone line (touch-tone or rotary) should be used.
2. Order a CA11A modular jack, which should be installed by the telephone company. If the CA11A jack is not present, installation cannot occur.
3. Order a normal business line from your telephone company's business representative. The line should be a regular voice grade line or an equivalent one. Use one line per unit.

   DDD (Direct Distance Dial) line

   -or-

   IDDD (International Direct Distance Dial) line if you communicate overseas

**NOTE**

Canon recommends an individual line following industry standards, i.e., 2,500 (touch-tone) or 500 (rotary/pulse dial) telephones. A dedicated extension off a PBX (Private Branch eXchange) unit without "Call Waiting" can be used with your facsimile unit. Key telephone systems are not recommended because they send nonstandard signals to individual telephones for ringing and special codes, which may cause a facsimile error.

**C. Power Requirements**

The power outlet should be a three-prong grounded receptacle (Single or Duplex). It should be independent from copiers, heaters, air conditioners, or any electric equipment that is thermostatically controlled. The rated value is 115 volts and 15 amperes. The CA11A modular jack should be relatively close to the power outlet to facilitate installation.

**Notice**

– This product meets the applicable Industry Canada technical specifications.

– The Ringer Equivalence Number is an indication of the Maximum number of devices allowed to be connected to a telephone interface. The termination of an interface may consist of any combination of devices subject only to the requirement that the sum of the RENs of all the devices does not exceed five.

– The REN of this product is 1.0.

– Before installing this equipment, users should ensure that it is permissible to be connected to the facilities of the local telecommunications company. The equipment must also be installed using an acceptable method of connection. In some cases, the company's inside wiring associated with a single line individual service may be extended by means of a certified connector assembly (telephone extension cord). The customer should be aware that compliance with the above conditions may not prevent deterioration of service in some situations.

– Repairs to certified equipment should be made by an authorized Canadian maintenance facility designated by the supplier. Any repairs or alterations made by the user to this equipment, or equipment malfunctions, may give the telecommunications company cause to request the user to disconnect the equipment.

– Users should ensure for their own protection that the electrical ground connections of the power utility, telephone lines, and internal metallic water pipe system, if present, are connected together. This precaution may be particularly important in rural areas.

**CAUTION**

Users should not attempt to make such connections themselves, but should contact the appropriate electric inspection authority, or electrician, as appropriate.

**NOTE**

This equipment complies with the Canadian ICES-003 Class B limits.

# Utilisation au Canada

Conditions à Remplir Préalablement à L'installation d'un Télécopieur Canon

**A. Emplacement**

Prévoir une table, un meuble, ou un bureau suffisamment solide et de taille appropriée (voir le chapitre 13, Annexe (Appendix), pour les indications de poids et dimensions).

**B. Installation téléphonique**

1. Une seule ligne téléphonique (tonalités ou impulsions) doit être utilisée.
2. Il faut commander un jack modulaire CA11A qui sera installé par la compagnie téléphonique. Sans ce jack, la mise en place serait impossible.
3. Si vous vous abonnez à une nouvelle ligne, demandez une ligne d'affaires normale de qualité téléphonique courante ou équivalente. Prenez un abonnement d'une ligne par appareil.

   Ligne automatique interurbaine

   ou

   Ligne automatique internationale (si vous communiquez avec les pays étrangers)

**NOTE**

Canon vous conseille d'utiliser une ligne individuelle conforme aux normes industrielles, à savoir:
ligne téléphonique 2,500 (pour appareil à clavier) ou 500 (pour appareil à cadran/impulsions). Il est également possible de raccorder ce télécopieur à un système téléphonique à poussoirs car la plupart de ces systèmes émettent des signaux d'appel non normalisés ou des codes spéciaux qui risquent de perturber le fonctionnement du télécopieur.

**C. Condition d'alimentation**

Raccordez le télécopieur à une prise de courant plus terre à trois branches, du type simple ou double, et qui ne sert pas à alimenter un copieur, un appareil de chauffage, un climatiseur ou tout autre appareil électrique à thermostat.

L'alimentation doit être de 115 volts et 15 ampères. Pour faciliter l'installation, le jack CA11A doit être assez proche de la prise de courant.

**Remarques**

– Le présent matériel est conforme aux spécifications techniques applicables d'Industrie Canada.

– Avant d'installer cet appareil, l'utilisateur doit s'assurer qu'il est permis de le connecter à l'équipement de la compagnie de télécommunication locale et doit installer cet appareil en utilisant une méthode de connexion autorisée. Il se peut qu'il faille étendre la circuiterie intérieure de la ligne individuelle d'abonné, qui a été installée par la compagnie, au moyen d'un jeu de connecteurs homologués (rallonge téléphonique).

– L'attention de l'utilisateur est attirée sur le fait que le respect des conditions mentionnées ci-dessus ne constitue pas une garantie contre les dégradations de qualité du service dans certaines circonstances.

– L'indice d'équivalence de la sonnerie (IES) sert à indiquer le nombre maximal de terminaux qui peuvent être raccordés à une interface téléphonique. La terminaison d'une interface peut consister en une combinaison quelconque de dispositifs, à la seule condition que la somme d'indices d'équivalence de la sonnerie de tous les dispositifs n'excède pas 5.

– Le nombre d'équivalents sonnerie (REN) de ce produit est 1,0.

– Les réparations sur un appareil certifié doivent être faites par une société d'entretien canadienne autorisée par le Gouvernement canadien et désignée par le fournisseur. Toute réparation ou modification que pourrait faire l'utilisateur de cet appareil, ou tout mauvais fonctionnement, donne à la compagnie de télécommunication le droit de débrancher l'appareil.

– Pour sa propre protection, l'utilisateur doit s'assurer que les prises de terre de l'appareil d'alimentation, les lignes téléphoniques et les tuyaux métalliques internes, s'il y en a, sont bien connectés entre eux. Cette précaution est particulièrement importante dans les zones rurales.

**CAUTION**

Au lieu d'essayer de faire ces branchements eux-mêmes, les utilisateurs sont invités à faire appel à un service d'inspection faisant autorité en matière d'électricité ou à un électricien, selon le cas.

**NOTE**

Respecte les limites de la classe B de la NMB-003 du Canada.

# Laser Safety

This machine complies with 21 CFR Chapter 1 Subchapter J as a Class 1 laser product under the U.S. Department of Health and Human Services (DHHS) Radiation Performance Standard according to the Radiation Control for Health and Safety Act of 1968. This means that the machine does not produce hazardous radiation.
Since radiation emitted inside the machine is completely confined within protective housings and external covers, the laser beam cannot escape from the machine during any phase of user operation.

## CDRH Regulations

The Center for Devices and Radiological Health (CDRH) of the U.S. Food and Drug Administration implemented regulations for laser products on August 2, 1976. These regulations apply to laser products manufactured from August 1, 1976. Compliance is mandatory for products marketed in the United States.

**CAUTION**

Use of controls, adjustments, or performance of procedures other than those specified in this manual may result in hazardous radiation exposure.

The label is attached to the laser scanner machine inside the machine and is not in a user access area.

This machine is confirmed as the class 1 laser product in IEC60825-1:2007.

# Before Using the Machine

Chapter 1

**This chapter describes what you should know before using this machine, such as the names of the parts and their functions, and basic settings to use various functions.**


**Machine Components ..... 1-2**
External View (Front) ..... 1-2
External View (Back) ..... 1-4
**Operation Panel ..... 1-7**
Main Operation Panel ..... 1-7
Fax Operation Panel ..... 1-9
**Display (Standby Mode) ..... 1-10**
Copy Mode ..... 1-10
Fax Mode ..... 1-10
Scan Mode ..... 1-10
**Toner Cartridge ..... 1-11**
Maintaining the Toner Cartridge ..... 1-12
Checking the Toner Level ..... 1-12
**Entering Characters ..... 1-14**
**Telephone Line Settings ..... 1-15**
**Timer Settings ..... 1-16**
Setting the Sleep Mode ..... 1-16
Setting the Daylight Saving Time ..... 1-17

# Machine Components

**This section describes the parts names of the machine and their functions.**

## External View (Front)

### MF4380dn

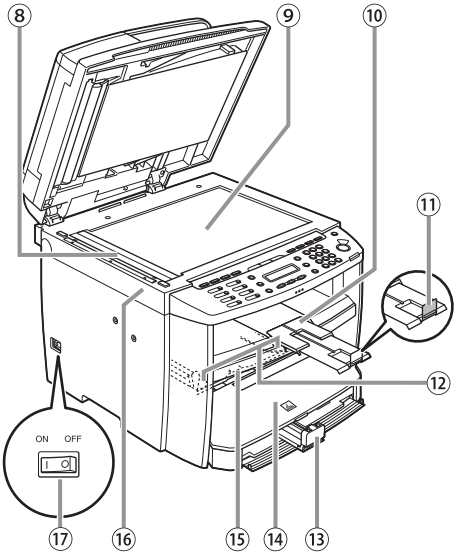


### MF4370dn

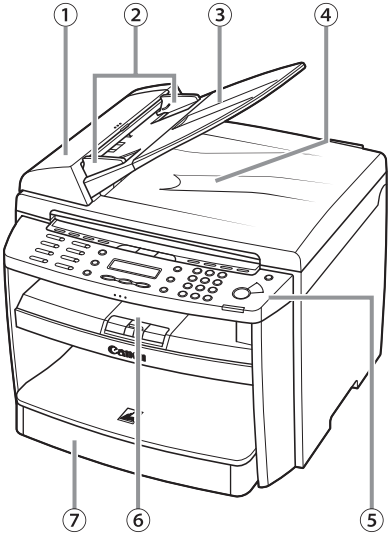


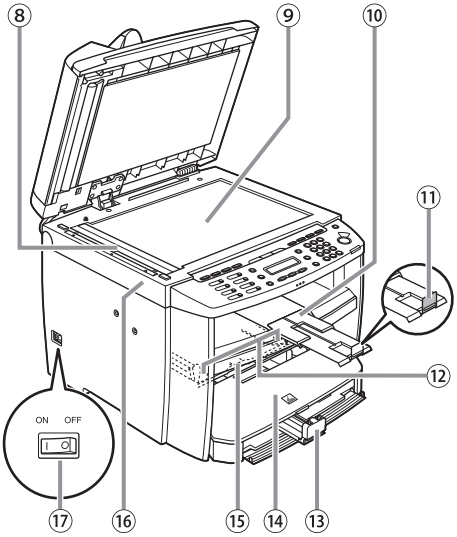

## MF4350d

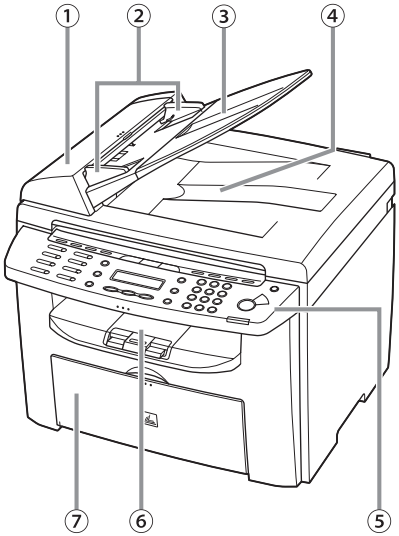


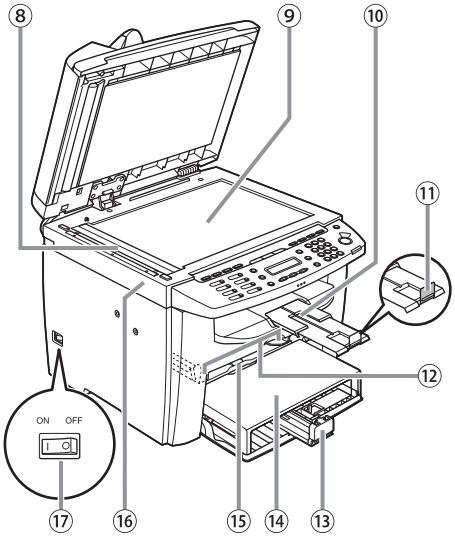


①ADF (Automatic Document Feeder)
Holds documents and feeds them automatically into the scanning area.

②Slide guides
Adjust to the width of the document.

③Document feeder tray
Holds documents.

④Document delivery tray
Receives documents.

⑤Operation panel
Controls the machine.

⑥Output tray
Receives copies, prints and faxes.

⑦Paper cassette (For MF4380dn/MF4370dn)/Paper feeding tray (For MF4350d)
Loads the paper supply.

⑧Scanning area
Scans documents from the ADF.

⑨Platen glass
Place documents.

⑩Output tray extension
Extends for the output tray.

⑪Paper stopper
Prevents the paper from falling off the output tray. Open the paper stopper from its original position for LTR/A4 paper. For LGL paper, pull out the output tray extension first, and then open the paper stopper.

⑫Slide guides for multi-purpose tray
Adjust to the width of the paper.

⑬Paper guide rail
Holds the paper supply.

⑭Dust cover
Protects the paper supply in the paper cassette or paper feeding tray from the dirt and dust.

⑮Multi-purpose tray
Feeds paper when you insert one by one manually.

⑯Scanning platform
Open this platform when replacing the toner cartridge or clearing paper jams.

⑰Main power switch
Turns the power ON or OFF.

# External View (Back)

## MF4380dn

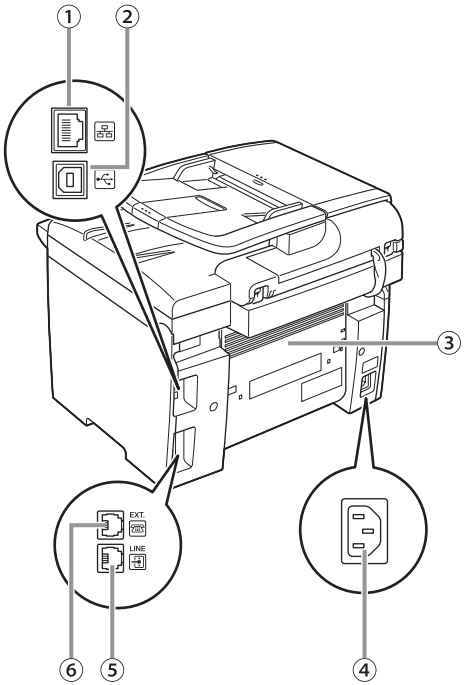

## MF4370dn

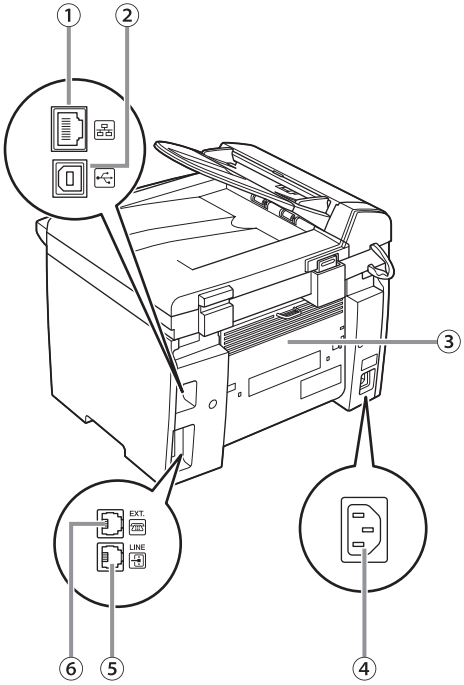

## MF4350d

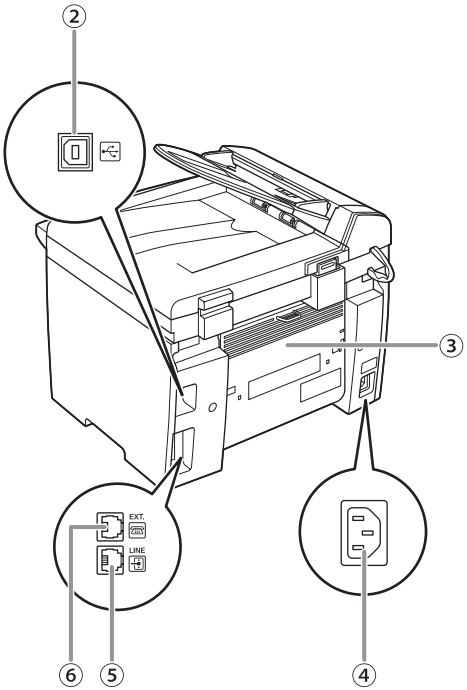


①Ethernet port (MF4380dn/MF4370dn Only)
Connect the network cable.

②USB port
Connect the USB (Universal Serial Bus) cable.

③Rear cover
Open this cover when clearing paper jams.

④Power socket
Connect the power cord.

⑤Telephone line jack
Connect the telephone cable.

⑥External device jack
Connect an external device.

# Operation Panel

**This section describes the names and functions of the operation panel keys, and describes all the parts on the operation panel.**

## Main Operation Panel

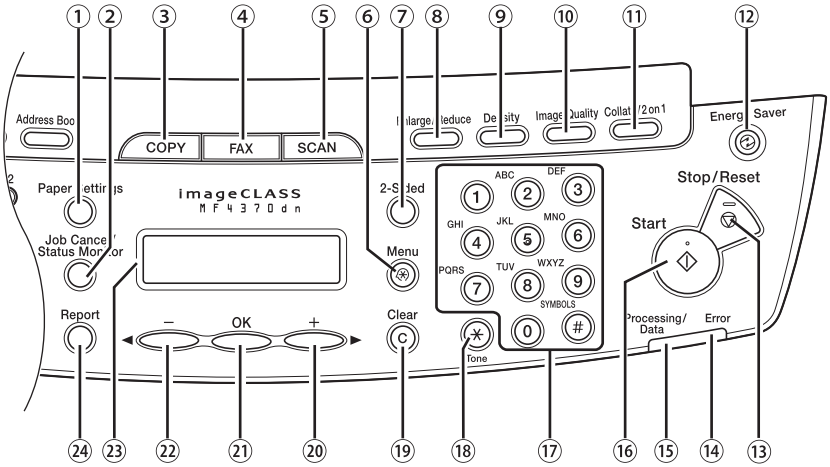

①[Paper Settings] key
Press to specify the paper size and type for the paper cassette or multi-purpose tray.

②[Job Cancel/Status Monitor] key
Press to check and cancel jobs being processed or waiting to be processed.

③[COPY] key
Press to switch to the Copy mode.

④[FAX] key
Press to switch to the Fax mode.

⑤[SCAN] key
Press to switch to the Scan mode.

⑥[Menu] key
Press to select or cancel the modes in Additional Functions.

⑦[2-Sided] key
MF4380dn:
Press to copy or fax 2-sided documents.
MF4370dn/MF4350d:
Press to copy 1-sided documents as 2-sided copies.

⑧[Enlarge/Reduce] key
Press to enlarge or reduce copy ratio.

⑨[Density] key
Press to adjust the density for copy or documents you send.

⑩[Image Quality] key
Press to select image quality for copy or fax.

⑪[Collate/2 on 1] key
Press to collate copies, or press to set 2 on 1 copying.
Also press to set ID card copying.

⑫[Energy Saver] key
Press to set or cancel the Sleep mode manually. The key lights green when the Sleep mode is set, and goes off when the mode is canceled.

⑬[Stop/Reset] key
Press to stop a current job. Also, press to return the machine to the standby mode.

⑭Error indicator
Blinks when an error has occurred.

⑮Processing/Data indicator
Blinks while sending or receiving faxes. Lights when the machine has waiting jobs and stores the data in memory.

⑯[Start] key
Press to start copying, scanning and sending faxes.

⑰Numeric keys
Enter letters and numbers.

⑱[Tone] key
Press to switch from rotary pulse to tone dialing.

⑲[Clear] key
Press to clear entered alphanumeric characters.

⑳[+ ►] key
Press to increase the value for various settings.
Also press to see the next item in the menu.

㉑[OK] key
Press to accept a set function or mode.
Also press and hold to print a sample page when you are in the copy mode. For details, see "Printing a Sample Page," on p. 4-24.

㉒[◄ −] key
Press to decrease the value for various settings.
Also press to see the previous item in the menu.

㉓Display
Displays messages and prompts during operation. Displays selection, text, and numbers when adjusting the settings.

㉔[Report] key
Press to print reports and lists manually.

# Fax Operation Panel

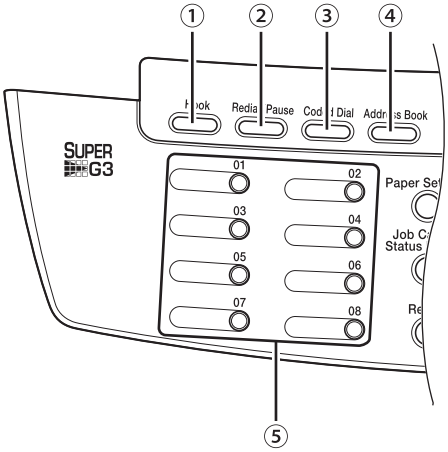


①[Hook] key
Press when you want to dial without lifting up the handset of the external telephone.

②[Redial/Pause] key
Press to redial the last dialed number when fax is standing by, or press to insert a pause when entering a fax number.

③[Coded Dial] key
Press to specify recipients registered under coded dial codes.

④[Address Book] key
Press to search pre-registered recipients under one-touch keys and coded dial codes by name or fax number.

⑤One-Touch keys
Press to specify recipients registered under one-touch keys.

# Display (Standby Mode)

## Copy Mode

This section describes the copy standby mode. Be sure to press [COPY] to switch to the following display whenever using copy functions:

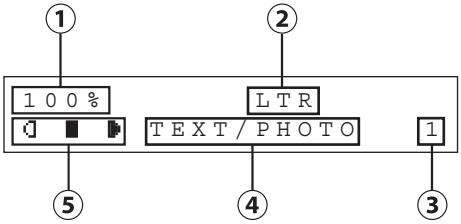


①Zoom ratio
②Paper size
③Quantity
④Image quality
⑤Density

## Fax Mode

This section describes the fax standby mode. Be sure to press [FAX] to switch to the following display whenever using fax functions:

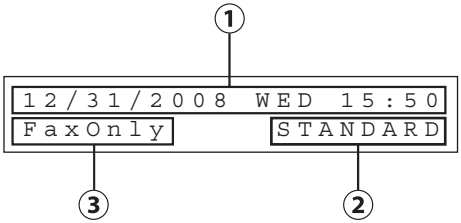


①Date & Time
②Image quality
③Receive mode

## Scan Mode

This section describes the scan standby mode. For MF4380dn/MF4370dn, press [SCAN] repeatedly to select <USB SCANNING> or <NETWORK SCANNING>.

```
USB SCANNING
```

```
NETWORK SCANNING
```

For MF4350d, press [SCAN] to display <SCANNING MODE>.

```
SCANNING MODE
```

**NOTE**

- Depending on your needs, you can change the standby display which appears when the main power switch is turned ON. For details, see "Introduction of the Machine," in the e-Manual.
- When the main power switch is turned ON, the display displays <PLEASE WAIT> until the standby display appears.
- If the machine remains idle for one minute, the display returns to the standby mode (Auto Clear Function).

# Toner Cartridge

**The average print yield of the Canon genuine starter toner cartridge which comes with the machine is 1,000 pages, the Canon genuine replacement toner cartridge is 2,000 pages. The page counts are on the basis of "ISO/ IEC 19752"* when printing A4 size paper with the default print density setting. The level of toner consumption varies depending on the type of documents printed. If your average document contains a lot of graphics, tables, or charts, the average print yield of the toner cartridge will be fewer as they consume more toner. When you are replacing a toner cartridge, be sure to use a toner cartridge designed for this product. To purchase the Canon genuine replacement toner cartridge, contact your local Canon dealer or Canon Customer Care Center (U.S.A.:1-800-OK-CANON, Canada:1-800-652-2666).**

*** "ISO/IEC 19752" is the global standard related to "Method for the determination of toner cartridge yield for monochromatic electrophotographic printers and multi-function devices that may contain printer components" issued by ISO (International Organization for Standardization).**

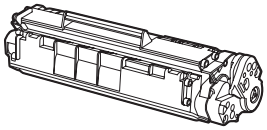

| Model Name | Type | Supported Canon Genuine Toner Cartridge | Average Print Yield |
|---|---|---|---|
| **MF4380dn/MF4370dn/ MF4350d** | Bundled | Canon Cartridge 104 Starter | 1,000 pages |
| | Replacement | Canon Cartridge 104 | 2,000 pages |

## Maintaining the Toner Cartridge

Note the following when handling the toner cartridge.

**CAUTION**

- Do not place the toner cartridge in fire. Toner powder is flammable.
- If there is a toner powder leakage, make sure not to inhale or touch the toner powder. If it comes in contact with your skin, rinse with cold water using soap. If you feel an irritation on your skin or inhale the powder, consult a doctor immediately.
- When removing the toner cartridge from the machine, make sure to remove it carefully. If not removed with care, the toner powder may scatter and come in contact with your eyes and mouth. If this happens, rinse with water and consult a doctor immediately.
- Keep the toner cartridge away from small children. If they ingest the toner powder, consult a doctor immediately.
- Do not disassemble the toner cartridge. The toner powder may scatter and come in contact with your eyes and mouth. If this happens, rinse with water and consult a doctor immediately.

**NOTE**

- Keep the toner cartridge away from computer screens, disk drives, and floppy disks. The magnet inside the toner cartridge may harm these items.
- Avoid locations subject to high temperature, high humidity, or rapid changes in temperature.
- Do not expose the toner cartridge to direct sunlight or bright light for more than five minutes.
- Store the toner cartridge in its protective bag. Do not open the bag until you are ready to install the toner cartridge in the machine.
- Save the toner cartridge's protective bag in case you need to repack and transport the toner cartridge at a later date.
- Do not store the toner cartridge in a salty atmosphere or where there are corrosive gases such as from aerosol sprays.
- Do not remove the toner cartridge from the machine unnecessarily.
- Do not open the drum protective shutter on the toner cartridge. Print quality may deteriorate if the drum surface is exposed to light or is damaged.
- Always hold the toner cartridge by its handle to avoid touching the drum protective shutter.
- Do not place the toner cartridge in an upright or an upside down position. If toner becomes caked in the toner cartridge, it may become impossible to free it even by shaking the toner cartridge.
- For optimum print quality, when you replace toner cartridges, using Canon genuine ones is recommended.
- Be careful of counterfeit toner cartridges
  Please be aware that there are counterfeit Canon toner cartridges in the marketplace. Use of counterfeit toner cartridge may result in poor print quality or machine performance. Canon is not responsible for any malfunction, accident or damage caused by the use of counterfeit toner cartridge.

  For more information,
  see http://www.canon.com/counterfeit.

## Checking the Toner Level

You can check the amount of toner remaining in the toner cartridge.

**1** Press ○ [Job Cancel/Status Monitor] repeatedly to select <TONER GAUGE>, then press [OK].

```
TONER  GAUGE
```

The toner level is displayed in the display at five levels. If the toner gauge indicates that the toner is empty, it is recommended that the toner cartridge be replaced. (See "Replacing the Toner Cartridge," on p. 10-9.)

■ Toner full

```
TONER  GAUGE
0%     ■■■■■■        100%
```

■ Toner high

```
TONER  GAUGE
0%     ■■■■□□        100%
```

■ Toner low

```
TONER GAUGE
0%      ■■□□□□        100%
```

■ Toner near empty

```
TONER GAUGE
0%      ■□□□□□        100%
```

■ Toner empty

```
TONER GAUGE
0%      □□□□□□        100%
```

**2** Press [Stop/Reset] to return to the standby mode.

# Entering Characters

**For displays that require alphanumeric entries, follow the procedure below to enter characters.**
**Example: Enter <Canon>. For details on entering characters, see "Information About the Keys," in the Starter Guide or "Setting Up the Machine," in the e-Manual.**



**1** Press ② repeatedly until an uppercase <C> appears.

```
NAME                    [A]
C
```

**2** Press [+►] to move the cursor to the right, then press ② until an <a> appears.

```
NAME                    [A]
Ca
```

**3** Press ⑥ until an <n> appears.

```
NAME                    [A]
Can
```

**4** Press [+►] to move the cursor to the right, then press ⑥ until an <o> appears.

```
NAME                    [A]
Cano
```

**5** Press [+►] to move the cursor to the right, then press ⑥ until an <n> appears.

```
NAME                    [A]
Canon
```

# Telephone Line Settings

**Set the type of telephone line that is connected to the machine.**
**If this setting is incorrect, you will be unable to communicate with other machines. Make sure to check the type of telephone line that you are using, and make the correct setting.**
**The default setting is <TOUCH TONE>**

**1** Press [Menu].

**2** Press [◄−] or [+►] to select <FAX SETTINGS>, then press [OK].

```
MENU
5   FAX SETTINGS
```

**3** Press [◄−] or [+►] to select <USER SETTINGS>, then press [OK].

```
FAX SETTINGS
2   USER SETTINGS
```

**4** Press [◄−] or [+►] to select <TEL LINE TYPE>, then press [OK].

```
USER SETTINGS
3   TEL LINE TYPE
```

**5** Press [◄−] or [+►] to select the telephone line type, then press [OK].

```
TEL LINE TYPE
            TOUCH TONE
```

- <TOUCH TONE>: Tone dialing
- <ROTARY PULSE>: Pulse dialing
- If you do not know the type of telephone line you use, contact your local telephone company.

**6** Press [Stop/Reset] to return to the standby mode.

# Timer Settings

**The timer settings enables you to set the Sleep Mode and the Daylight Saving Time.**

## Setting the Sleep Mode

If the machine remains idle for a certain period of time, it automatically enters the Sleep mode.

The default settings are as follows:

– <AUTO SLEEP>: ON
– <AUTO SLEEP TIME>: 5MIN.

**1** Press [Menu].

**2** Press [◄−] or [+►] to select <TIMER SETTINGS>, then press [OK].

```
MENU
8   TIMER SETTINGS
```

**3** Press [◄−] or [+►] to select <AUTO SLEEP>, then press [OK].

```
AUTO SLEEP
                    ON
```

**4** Press [◄−] or [+►] to select <ON>, then press [OK].

```
AUTO SLEEP
                    ON
```

**5** Press [◄−] or [+►] to select the desired interval, then press [OK].

```
AUTO SLEEP TIME
                  5MIN.
```

– You can set the interval from 3 to 30 minutes (in one-minute increments).
– You can also enter values using 0 – 9 [numeric keys].

**6** Press [Stop/Reset] to return to the standby mode.

**NOTE**

– [Energy Saver] lights green when the machine enters the Sleep mode.
– To enter the Sleep mode manually, press [Energy Saver] on the operation panel.
– The machine will not enter the Sleep mode when:
  - the machine is in operation
  - the Processing/Data indicator lights or blinks
  - a message appears on the display and the Error indicator blinks
  - paper is loaded in the multi-purpose tray
  - a paper jam occurs in the machine
  - the handset of the external telephone is off the hook
– The machine will leave the Sleep mode when:
  - you place documents in the ADF
  - you press [Energy Saver] on the operation panel
  - a fax is received
  - the handset of the external telephone is off the hook
  - a print job is sent from a computer, and the print is started

## Setting the Daylight Saving Time

In some countries or areas, time is advanced throughout the summer season. This is called "Daylight Saving Time." This section describes how to set the Daylight Saving Time.
The default setting is <OFF>.

**1** Press [Menu].

**2** Press [◄−] or [+►] to select <TIMER SETTINGS>, then press [OK].

```
MENU
8   TIMER SETTINGS
```

**3** Press [◄−] or [+►] to select <DAYLIGHT SV.TIME>, then press [OK].

```
TIMER SETTINGS
4   DAYLIGHT SV.TIME
```

**4** Press [◄−] or [+►] to select <ON>, then press [OK].

```
DAYLIGHT SV.TIME
                    ON
```

**5** Press [◄−] or [+►] to select <START DATE/TIME>, then press [OK].

```
DAYLIGHT SV.TIME
1   START DATE/TIME
```

**6** Press [◄−] or [+►] to select <MONTH>, then press [OK].

```
START DATE/TIME
1   MONTH
```

**7** Press [◄−] or [+►] to select the month, then press [OK].

```
MONTH
                    MARCH
```

**8** Press [◄−] or [+►] to select <WEEK>, then press [OK].

```
START DATE/TIME
2   WEEK
```

**9** Press [◄−] or [+►] to select the week, then press [OK].

```
WEEK
            SECOND WEEK
```

**10** Press [◄−] or [+►] to select <DAY>, then press [OK].

```
START DATE/TIME
3   DAY
```

**11** Press [◄−] or [+►] to select the day, then press [OK].

```
DAY
                  SUNDAY
```

**12** Press [◄−] or [+►] to select <END DATE/TIME>, then press [OK].

```
DAYLIGHT SV.TIME
2   END DATE/TIME
```

**13** Press [◄−] or [+►] to select <MONTH>, then press [OK].

```
END  DATE/TIME
1   MONTH
```

**14** Press [◄−] or [+►] to select the month, then press [OK].

```
MONTH
                    NOVEMBER
```

**15** Press [◄−] or [+►] to select <WEEK>, then press [OK].

```
END  DATE/TIME
2   WEEK
```

**16** Press [◄−] or [+►] to select the week, then press [OK].

```
WEEK
              SECOND  WEEK
```

**17** Press [◄−] or [+►] to select <DAY>, then press [OK].

```
END  DATE/TIME
3   DAY
```

**18** Press [◄−] or [+►] to select the day, then press [OK].

```
DAY
                      SUNDAY
```

**19** Press [Stop/Reset] to return to the standby mode.

# Documents and Print Media

Chapter 2

**This chapter describes the types of paper and documents that can be used with the machine and how to load paper in the paper cassette and the multi-purpose tray.**


**Documents Requirements ..... 2-2**
**Scanning Area ..... 2-3**
**Placing Documents ..... 2-4**
On the Platen Glass ..... 2-4
In the ADF ..... 2-5
**Paper Requirements ..... 2-6**
**Printable Area ..... 2-7**
**Loading Paper ..... 2-8**
In the Paper Cassette ..... 2-8
In the Multi-Purpose Tray ..... 2-11
**Setting Paper Size and Type ..... 2-14**
For the Paper Cassette ..... 2-14
For the Multi-Purpose Tray ..... 2-15

# Documents Requirements

| | Platen Glass | ADF |
|---|---|---|
| Type | – Plain paper<br>– Thick documents<br>– Photographs<br>– Small documents (e.g., index cards)<br>– Special types of paper (e.g., tracing paper*1, transparencies*1, etc.)<br>– Books (Height: Maximum 1" (24 mm)) | Plain paper (Multi-page documents of the same size, thickness and weight or one-page documents.) |
| Size (W × L) | Maximum 8 1/2" × 11 5/8"<br>(Maximum 216 × 297 mm) | Maximum 8 1/2" × 14" (Maximum 216 × 356 mm)<br>Minimum 4 1/8" × 5 7/8" (Minimum 105 × 148.5 mm) |
| Weight | Maximum 4.4 lb (2 kg) | 11 to 28 lb (40 to 105 g/m$^2$) |
| Quantity | 1 sheet | MF4380dn<br>Maximum 50 sheets*2<br>(Maximum 10 sheets for LGL documents)*2<br>MF4370dn/MF4350d<br>Maximum 35 sheets*2<br>(Maximum 10 sheets for LGL documents)*2 |

*1 When copying transparent documents such as tracing paper or transparencies, use a piece of plain white paper to cover the document after placing it face-down on the platen glass.

*2 21 lb (80 g/m$^2$) paper

- Do not place the document on the platen glass or in the ADF until the glue, ink or correction fluid on the document is completely dry.
- To prevent document jams in the feeder, do not use any of the following:
  - Wrinkled or creased paper
  - Carbon paper or carbon-backed paper
  - Curled or rolled paper
  - Coated paper
  - Torn paper
  - Onion skin or thin paper
  - Documents with staples or paper clips attached
  - Paper printed with a thermal transfer printer
  - Transparencies

# Scanning Area

**Make sure your document's text and graphics fall within the shaded area in the following diagram. Note that the margin widths listed are approximate and there may be slight variations in actual use.**

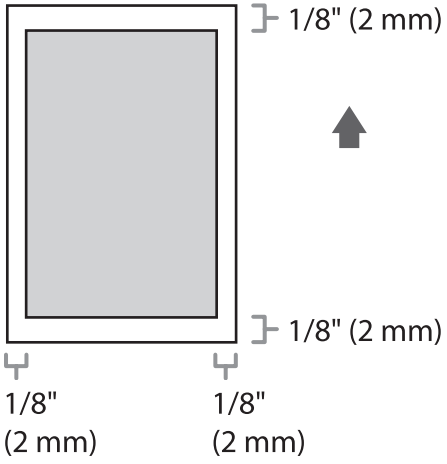

# Placing Documents

**This section describes how to place your documents on the platen glass and in the ADF.**

## On the Platen Glass

**1** Lift up the ADF.

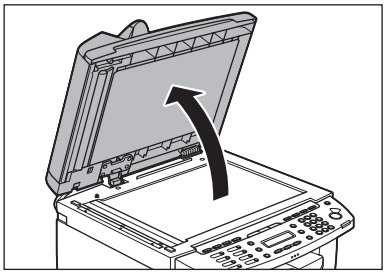

**2** Place a document face down.

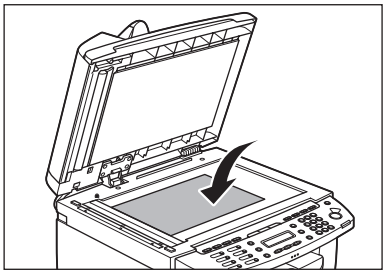

**3** Align the document with the appropriate paper size marks.

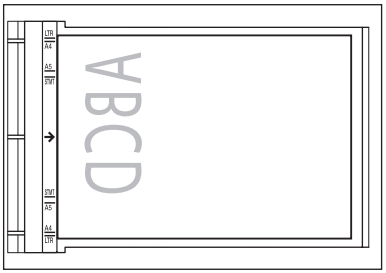


If your document does not match any of the paper size marks, align the center of your document with the arrow mark.

**4** Gently lower the ADF.

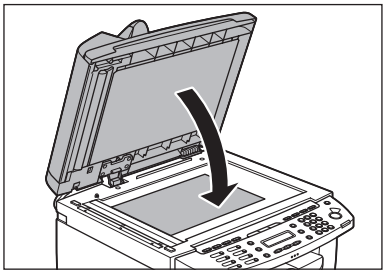

The document is ready for scanning.

**CAUTION**

- When closing the ADF, be careful not to get your fingers caught, as this may result in personal injury.
- Do not press down the ADF forcefully, as this may damage the platen glass and cause personal injury.

**NOTE**

Remove the document from the platen glass when scanning is complete.

## In the ADF

**1** Fan the documents stack and even the edges.

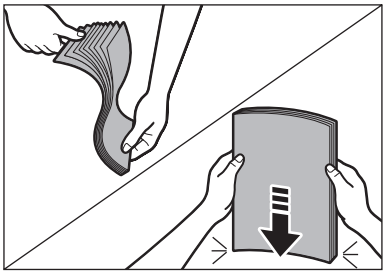

**2** Adjust the slide guides to the width of the documents.

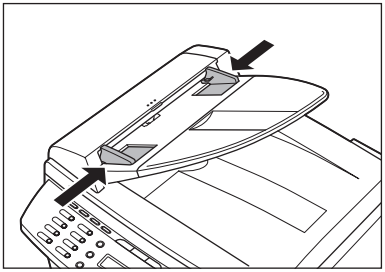

**3** Neatly place the documents face up in the document feeder tray.

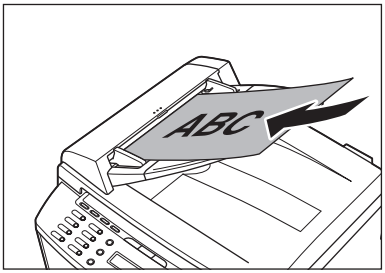


The documents are ready for scanning.

**NOTE**

- Do not add or remove documents while they are being scanned.
- When scanning is complete, remove the documents from the document delivery tray to avoid paper jams.
- Avoid using ADF to scan the same documents more than 30 times. When scanned repeatedly, documents can become folded or torn, which may cause paper jams.
- If the feeder rollers are soiled from scanning documents written in pencil, clean them. (See "Cleaning the Machine," on p. 10-2.)

# Paper Requirements

| | Paper cassette | Multi-purpose tray |
|---|---|---|
| Size (W × L) | LTR, LGL, A4, B5, A5, Executive, Envelope (COM10 (#10), Monarch, DL, ISO-C5 (6 3/8" × 9" (162 × 229 mm)), Oficio, Brazil-Oficio, Mexico-Oficio, Government-LTR, Government-LGL, Foolscap, 3" × 5" to 8 1/2" × 14" (76 × 127 to 216 × 356 mm) | |
| Weight | 16 to 43 lb (60 to 163 g/m$^2$) | |
| Quantity | Maximum 250 sheets (Height: maximum 1" (25 mm)) | Maximum 1 sheet |
| Type | Plain Paper, Plain Paper L, Heavy Paper, Heavy Paper H, Transparency | |

**NOTE**

The default paper size is LTR. If you use a different paper size, you need to change the paper size settings. (See "Setting Paper Size and Type," on p. 2-14.)

- To prevent paper jams, do not use any of the following:
  - Wrinkled or creased paper
  - Curled or rolled paper
  - Coated paper
  - Torn paper
  - Damp paper
  - Very thin paper
  - Paper which has been printed on using a thermal transfer printer (Do not copy on the reverse side.)
- The following types of paper do not print well:
  - Highly textured paper
  - Very smooth paper
  - Shiny paper
- Make sure the paper is free from dust, lint, and oil stains.
- Make sure to test paper before purchasing large quantities.
- Store all paper wrapped and on a flat surface until ready for use. Keep opened packs in their original packaging in a cool, dry location.
- Store paper at 64.4°F–75.2°F (18°C–24°C), 40%–60% relative humidity.
- Use only the transparencies designed for laser printers. Canon recommends you to use Canon type transparencies with this machine.

# Printable Area

**The shaded area indicates the approximate printable area of LTR paper. Note that the margin widths listed are approximate and there may be slight variations in actual use.**

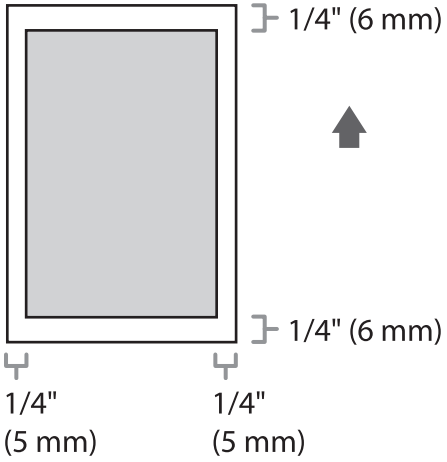

# Loading Paper

**This section describes how to load paper in the paper cassette and the multi-purpose tray.**

**NOTE**

The default paper size/type is set to <LTR> and <PLAIN PAPER> in the setting menu. When you load other size and/or type of paper, change the paper size/type setting by pressing ○ [Paper Settings]. (See "Setting Paper Size and Type," on p. 2-14.)

## In the Paper Cassette

Follow the procedure below to load paper in the paper cassette.

### For MF4380dn/MF4370dn

**1** Take out the dust cover.

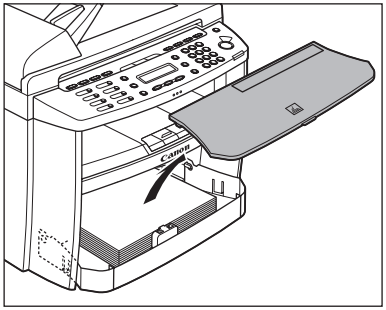

**2** Open the front panel of the paper cassette.

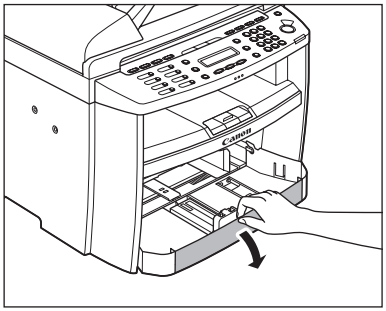

**3** Slide out the paper guide rail (A).

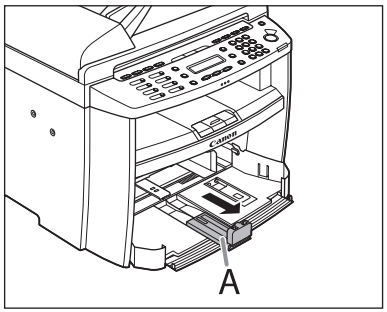


**4** Slide the side paper guides (A) to match the size of paper.

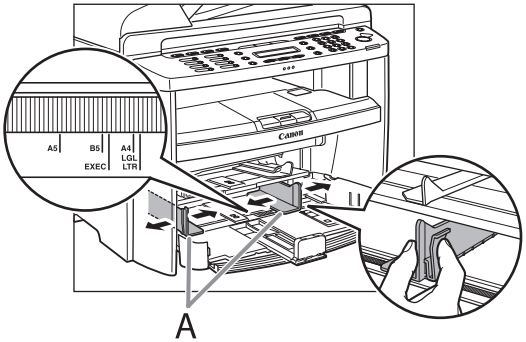


**NOTE**

If the paper guides do not fit the size of the paper, the printout may be skewed.

**5** Fan the paper stack and even the edges.

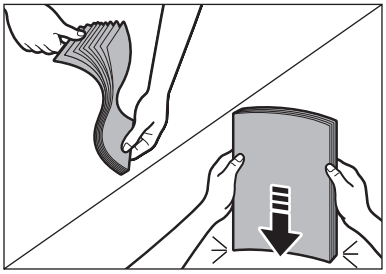

**6** Load the paper into the paper cassette with the print side up. Make sure the paper stack sits below the small fin (A) on the side paper guide.

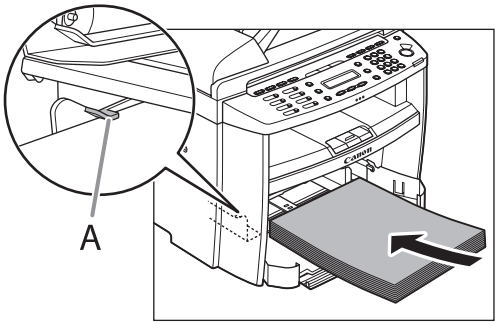


**7** Adjust the paper guide rail to match the size of paper.

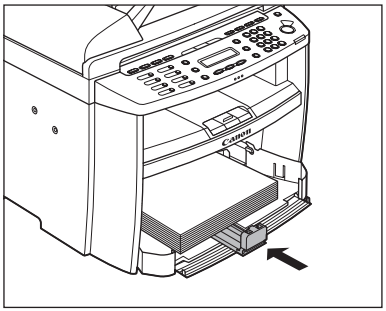

**8** Close the front panel of the paper cassette.

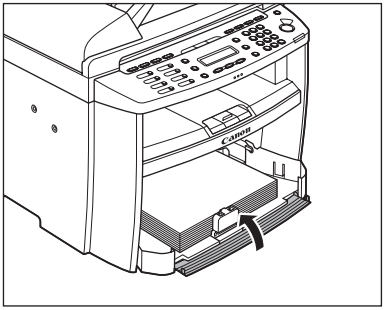

**NOTE**

To load Legal-size paper, leave the front panel of paper cassette open and adjust the paper guide rail (A) for Legal size paper.

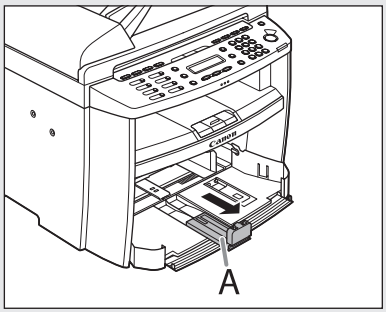


**9** Match up the edge of the dust cover (A) and the edge of the paper cassette (B), and place the cover on top of the cassette.

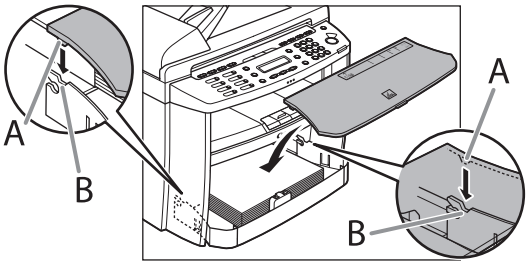

## For MF4350d

**1** Open the paper feeding tray.

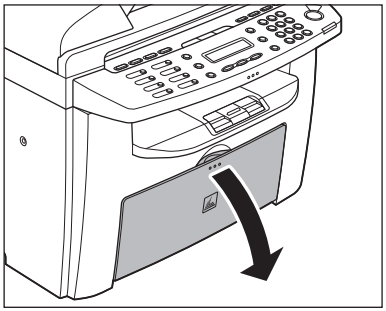

**2** Take out the dust cover from inside the machine.

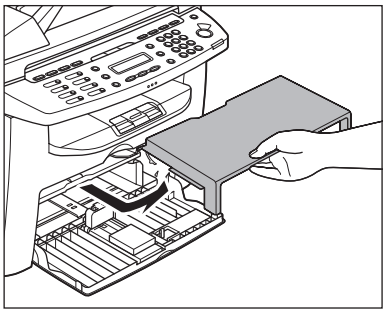

**3** Slide out the paper guide rail (A).

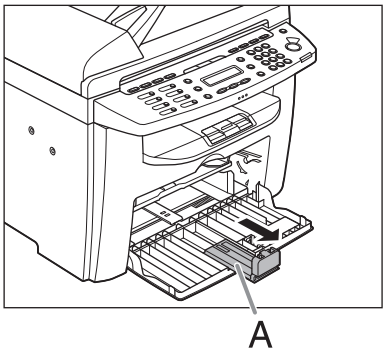


**4** Slide the side paper guides (A) to match the size of paper.

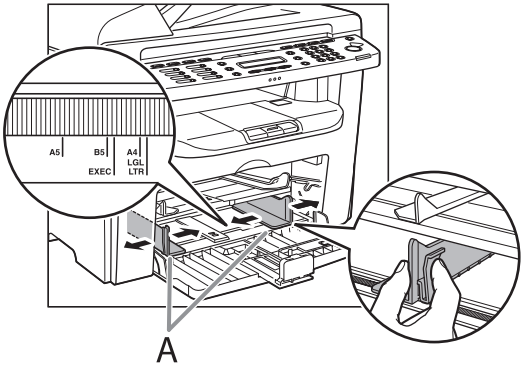


**NOTE**

If the paper guides do not fit the size of the paper, the printout may be skewed.

**5** Fan the paper stack and even the edges.

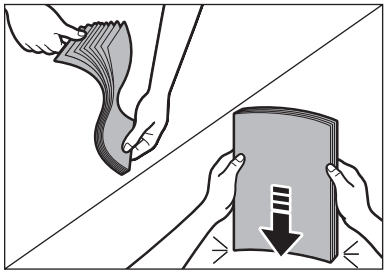

**6** Load the paper into the paper feeding tray with the print side up. Make sure the paper stack sits below the hook (A) on the side paper guide.

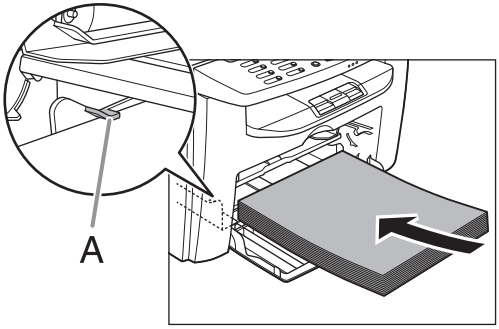


**7** Adjust the paper guide rail to match the size of paper.

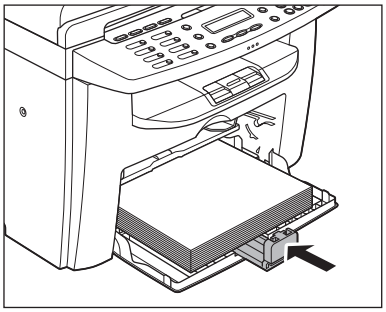

**8** Aligning the protrusions (A) on the both sides of the dust cover to the guides (B) inside the machine, set the dust cover.

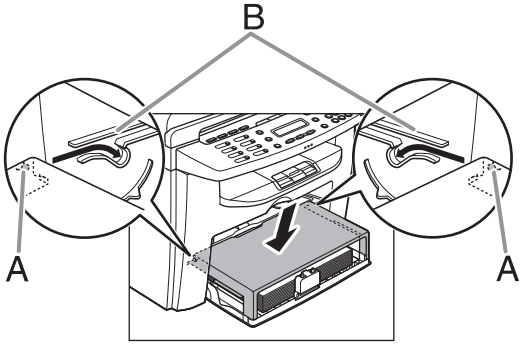


## In the Multi-Purpose Tray

Use the multi-purpose tray when you want to copy or print on the different paper which is in the paper cassette. Load paper one by one in the multi-purpose tray.

**NOTE**

- The paper in the multi-purpose tray is fed prior to the paper in the paper cassette.
- The recommended envelopes are COM10 (#10), MONARCH, DL, and ISOC5. Using other envelopes may affect the quality of the printout.
- Make sure to set the correct paper size in the printer driver.
- When printing received documents or reports, paper can be fed only from the paper cassette. If paper is loaded into the multi-purpose tray, <REMOVE MP PAPER> appears.

### For MF4380dn/MF4370dn

**1** Spread the paper guides a little wider than the actual paper width.

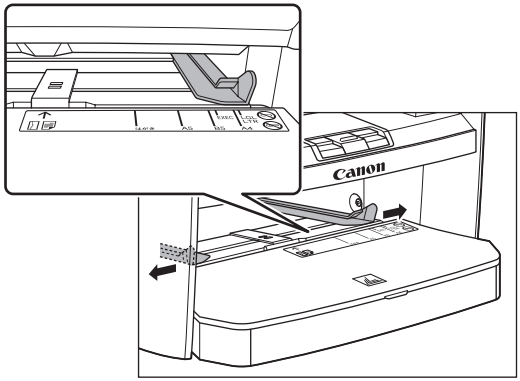

**2** When setting paper, gently insert the paper into the multi-purpose tray with the print side up.

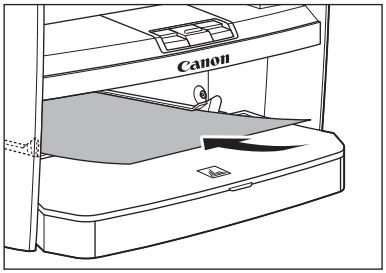


When setting an envelope, gently insert the envelope into the multi-purpose tray with the print side up and the right edge (i.e., closer to the stamp) first.

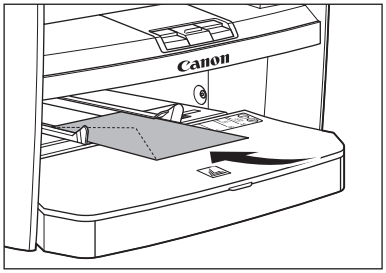


**NOTE**

When you load paper with a logo on, position the paper with the print side up (logo side) and insert it so that the top of the paper feeds first in the multi-purpose tray.

**3** Slide the paper guides so that they fit to both sides of the paper.

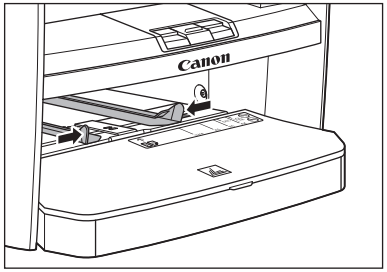


**NOTE**

If the paper guides do not fit the size of the paper, the print quality may be deteriorated.

**4** Specify the size and the type of the paper you load.

For details on how to specify the paper size and type, see "Setting Paper Size and Type," on p. 2-14.

## For MF4350d

**1** Spread the paper guides a little wider than the actual paper width.

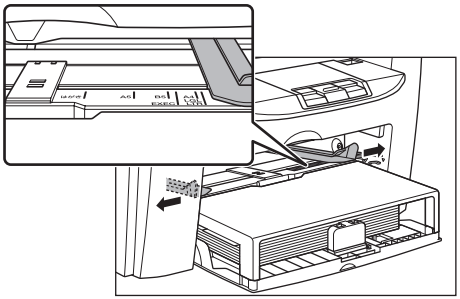

## 2 When setting paper, gently insert the paper into the multi-purpose tray with the print side up.

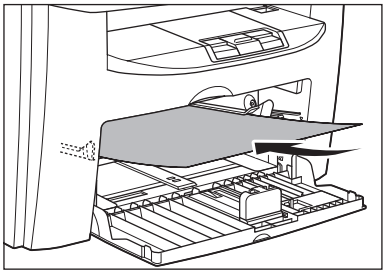

When setting an envelope, gently insert the envelope into the multi-purpose tray with the print side up and the right edge (i.e., closer to the stamp) first.

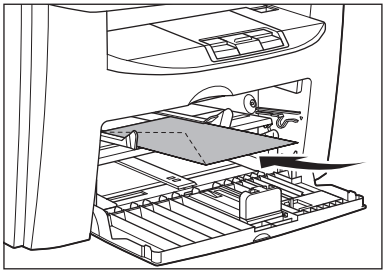

**NOTE**

When you load paper with a logo on, position the paper with the print side up (logo side) and insert it so that the top of the paper feeds first in the multi-purpose tray.

## 3 Slide the paper guides so that they fit to both sides of the paper.

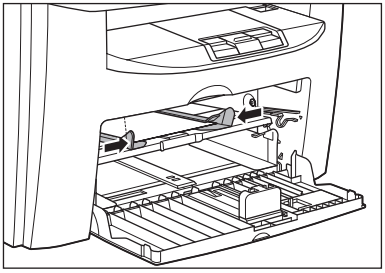

**NOTE**

If the paper guides do not fit the size of the paper, the print quality may be deteriorated.

## 4 Specify the size and the type of the paper you load.

For details on how to specify the paper size and type, see "Setting Paper Size and Type," on p. 2-14.

# Setting Paper Size and Type

**This section describes how to specify the paper size and type you are loading in the paper cassette and the multi-purpose tray. Whenever you change the paper size and type in the cassette and the tray, follow the procedure in this section to adjust the paper size and type settings for the cassette and the tray.**

**The default settings are as follows:**

- **<PAPER SIZE>: LTR**
- **<PAPER TYPE>: PLAIN PAPER**



## For the Paper Cassette

**1** Press ○ [Paper Settings] repeatedly to select <CASSETTE>, then press [OK].

```
CASSETTE
```

**2** Press [◄−] or [+►] to select the paper size, then press [OK].

Ex.

```
PAPER SIZE
                    LTR
```

You can select from the following paper sizes: <LTR>, <LGL>, <A4>, <B5>, <A5>, <EXECUTIVE>, <COM10>, <MONARCH>, <DL>, <ISO-C5>, <OFICIO>, <BRAZIL-OFICIO>, <MEXICO-OFICIO>, <GOVERNMENT-LETTER>, <GOVERNMENT-LEGAL>, <FOOLSCAP>

**3** Press [◄−] or [+►] to select the paper type, then press [OK].

Ex.

```
PAPER TYPE
          PLAIN PAPER
```

You can select from the following paper types:

- <PLAIN PAPER> or <PLAIN PAPER L>*1 for Plain paper (17 lb to 24 lb (64 g/m$^2$ to 90 g/m$^2$))
- <HEAVY PAPER> or <HEAVY PAPER H>*2 for Heavy paper (Paper cassette: 28 lb to 34 lb (105 g/m$^2$ to 128 g/m$^2$), Multi-purpose tray: 28 lb to 43 lb (105 g/m$^2$ to 163 g/m$^2$)) or Envelope
- <TRANSPARENCY> for Transparency

*1 If paper curls excessively when printed with <PLAIN PAPER> selected, select <PLAIN PAPER L>.

*2 If print fixing is not sufficient when printed with <HEAVY PAPER> selected, select <HEAVY PAPER H>.

**NOTE**

If you have selected <B5>, <A5>, <EXECUTIVE>, <COM10>, <MONARCH>, <DL> or <ISO-C5> for the paper size in step 2, <PAPER TYPE> is not displayed.

## For the Multi-Purpose Tray

**1** Press ◯ [Paper Settings] repeatedly to select <MP TRAY>, then press [OK].

```
MP  TRAY
```

**2** Press [◄−] or [+►] to select the paper size, then press [OK].

Ex.

```
PAPER  SIZE
                    LTR
```

You can select from the following paper sizes: <LTR>, <LGL>, <A4>, <B5>, <A5>, <EXECUTIVE>, <COM10>, <MONARCH>, <DL>, <ISO-C5>, <OFICIO>, <BRAZIL-OFICIO>, <MEXICO-OFICIO>, <GOVERNMENT-LETTER>, <GOVERNMENT-LEGAL>, <FOOLSCAP>

**3** Press [◄−] or [+►] to select the paper type, then press [OK].

Ex.

```
PAPER  TYPE
            PLAIN  PAPER
```

You can select from the following paper types:

– <PLAIN PAPER> or <PLAIN PAPER L>*1 for Plain paper (17 lb to 24 lb (64 g/m$^2$ to 90 g/m$^2$))
– <HEAVY PAPER> or <HEAVY PAPER H>*2 for Heavy paper (Paper cassette: 28 lb to 34 lb (105 g/m$^2$ to 128 g/m$^2$), Multi-purpose tray: 28 lb to 43 lb (105 g/m$^2$ to 163 g/m$^2$)) or Envelope
– <TRANSPARENCY> for Transparency

*1 If paper curls excessively when printed with <PLAIN PAPER> selected, select <PLAIN PAPER L>.

*2 If print fixing is not sufficient when printed with <HEAVY PAPER> selected, select <HEAVY PAPER H>.

**NOTE**

If you have selected <B5>, <A5>, <EXECUTIVE>, <COM10>, <MONARCH>, <DL> or <ISO-C5> for the paper size in step 2, <PAPER TYPE> is not displayed.

# Registering Destinations in the Address Book

Chapter 3

**This chapter describes how to register destinations in the Address Book, and how to edit and erase registered information.**


**About the Address Book ..... 3-2**
**Storing/Editing One-Touch Keys ..... 3-3**
Registering One-Touch Keys ..... 3-3
Editing One-Touch Keys ..... 3-3
Erasing One-Touch Keys ..... 3-4
**Storing/Editing Coded Dial Codes ..... 3-6**
Registering Coded Dial Codes ..... 3-6
Editing Coded Dial Codes ..... 3-6
Erasing Coded Dial Codes ..... 3-7
**Storing/Editing Recipients for Group Dialing ..... 3-9**
Registering Group Addresses ..... 3-9
Adding New Destination to Group ..... 3-10
Deleting Destination from Group ..... 3-10
Changing Group Name ..... 3-11
Deleting Group Addresses ..... 3-11

# About the Address Book

**The Address Book is a feature used for storing fax numbers. The Address Book is divided into one-touch keys and coded dial codes. You can store up to 8 destinations in one-touch keys, and 100 destinations in coded dial codes, for a total of 108 destinations in the whole Address Book. You can also register multiple destinations for a group address, and assign a one-touch key or coded dial code to this group.**
**Registering a destination in the Address Book saves you the effort of entering that destination's fax number each time you send a fax.**

**NOTE**

- Destinations stored in the Address Book can be exported to your computer as a file, which can be imported into the machine. For information on exporting the Address Book, see "Settings from a PC," in the e-Manual.
- For easy reference, it is recommended to print the list of recipients registered in one-touch keys or coded dial codes. (See "Introduction of the Machine," in the e-Manual.)

# Storing/Editing One-Touch Keys

**This section describes how to register destinations for one-touch keys and to edit the registered one-touch keys.**

## Registering One-Touch Keys

**1** Press [Menu].

**2** Press [◄−] or [+►] to select <ADDRESS BOOK SET.>, then press [OK].

```
MENU
6   ADDRESS BOOK SET.
```

**3** Press [◄−] or [+►] to select <1-TOUCH SPD DIAL>, then press [OK].

```
ADDRESS BOOK SET.
1   1-TOUCH SPD DIAL
```

**4** Press [◄−] or [+►] to select a one-touch key (01 to 08) for which you want to register the fax number, then press [OK].

```
1-TOUCH SPD DIAL
[01] NOT REGISTERED
```

You can also select a one-touch key by pressing the corresponding one-touch key.

**5** Enter the destination name (up to 20 letters, including spaces) with 0 – 9 [numeric keys], then press [OK].

Ex.

```
NAME                [A]
Canon A
```

**6** Enter the fax number you register (up to 50 digits, including spaces and pauses) with 0 – 9 [numeric keys], then press [OK].

Ex.

```
TEL NUMBER ENTRY
123XXXXXXX
```

To register another one-touch key, repeat the procedure from step 4.

**7** Press [Stop/Reset] to return to the standby mode.

## Editing One-Touch Keys

**1** Press [Menu].

**2** Press [◄−] or [+►] to select <ADDRESS BOOK SET.>, then press [OK].

```
MENU
6   ADDRESS BOOK SET.
```

**3** Press [◄−] or [+►] to select <1-TOUCH SPD DIAL>, then press [OK].

```
ADDRESS BOOK SET.
1   1-TOUCH SPD DIAL
```

**4** Press [◄−] or [+►] to select the one-touch key (01 to 08) you want to edit, then press [OK].

Ex.

```
1-TOUCH SPD DIAL
[01]Canon A
```

You can also select a one-touch key by pressing the corresponding one-touch key.

**5** Press [+►] repeatedly to go to the character you want to change, then press ⓒ [Clear].

Ex.

```
NAME                    [A]
Canon A
```

To delete the entire entry, press and hold ⓒ [Clear].

**6** Enter a new character with ⓪ – ⑨ [numeric keys], then press [OK].

Ex.

```
NAME                    [A]
Canon B
```

**7** Press [+►] repeatedly to go to the number you want to change, then press ⓒ [Clear].

Ex.

```
TEL NUMBER ENTRY
123XXXXXXX
```

To delete the entire entry, press and hold ⓒ [Clear].

**8** Enter a new number with ⓪ – ⑨ [numeric keys], then press [OK].

Ex.

```
TEL NUMBER ENTRY
124XXXXXXX
```

**9** Press [Stop/Reset] to return to the standby mode.

## Erasing One-Touch Keys

**1** Press ⓜ [Menu].

**2** Press [◄−] or [+►] to select <ADDRESS BOOK SET.>, then press [OK].

```
MENU
6  ADDRESS BOOK SET.
```

**3** Press [◄−] or [+►] to select <1-TOUCH SPD DIAL>, then press [OK].

```
ADDRESS BOOK SET.
1  1-TOUCH SPD DIAL
```

**4** Press [◄−] or [+►] to select a one-touch key (01 to 08) you want to erase, then press [OK].

Ex.

```
1-TOUCH SPD DIAL
[01]Canon A
```

You can also select a one-touch key by pressing the corresponding one-touch key.

**5** Press and hold ⓒ [Clear] to erase the destination name, then press [OK].

```
NAME                    [A]
_
```

**6** Press and hold ⓒ [Clear] to erase the fax number, then press [OK].

```
TEL NUMBER ENTRY
_
```

**NOTE**

If you erase the fax number, the registered name is cleared automatically.

**7** Press [Stop/Reset] to return to the standby mode.

# Storing/Editing Coded Dial Codes

**This section describes how to register destinations for coded dial codes and to edit the registered coded dial codes.**

## Registering Coded Dial Codes

**1** Press [Menu].

**2** Press [◄−] or [+►] to select <ADDRESS BOOK SET.>, then press [OK].

```
MENU
6   ADDRESS BOOK SET.
```

**3** Press [◄−] or [+►] to select <CODED DIAL>, then press [OK].

```
ADDRESS BOOK SET.
2   CODED DIAL
```

**4** Press [◄−] or [+►] to select a coded dial code (00 to 99) for which you want to register the fax number, then press [OK].

```
CODED DIAL
[*00]NOT REGISTERED
```

You can also select a coded dial code by pressing [Coded Dial] followed by the desired two-digit code.

**5** Enter the destination name (up to 20 letters, including spaces) with 0 – 9 [numeric keys], then press [OK].

Ex.

```
NAME
Canon C
```

**6** Enter the fax number you register (up to 50 digits, including spaces and pauses) with 0 – 9 [numeric keys], then press [OK].

Ex.

```
TEL NUMBER ENTRY
123XXXXXXX
```

To register another coded dial code, repeat the procedure from step 4.

**7** Press [Stop/Reset] to return to the standby mode.

## Editing Coded Dial Codes

**1** Press [Menu].

**2** Press [◄−] or [+►] to select <ADDRESS BOOK SET.>, then press [OK].

```
MENU
6   ADDRESS BOOK SET.
```

**3** Press [◄−] or [+►] to select <CODED DIAL>, then press [OK].

```
ADDRESS BOOK SET.
2   CODED DIAL
```

**4** Press [◄−] or [+►] to select the coded dial code (00 to 99) you want to edit, then press [OK].

Ex.

```
CODED DIAL
[*00]Canon C
```

You can also select a coded dial code by pressing [Coded Dial] followed by the two-digit code.

**5** Press [+►] repeatedly to go to the character you want to change, then press ⓒ [Clear].

Ex.

```
NAME
Canon C
```

To delete the entire entry, press and hold ⓒ [Clear].

**6** Enter a new character with ⓪ – ⑨ [numeric keys], then press [OK].

Ex.

```
NAME
Canon D
```

**7** Press [+►] repeatedly to go to the number you want to change, then press ⓒ [Clear].

Ex.

```
TEL NUMBER ENTRY
123XXXXXXX
```

To delete the entire entry, press and hold ⓒ [Clear].

**8** Enter a new number with ⓪ – ⑨ [numeric keys], then press [OK].

Ex.

```
TEL NUMBER ENTRY
124XXXXXXX
```

**9** Press [Stop/Reset] to return to the standby mode.

## Erasing Coded Dial Codes

**1** Press ⓜ [Menu].

**2** Press [◄−] or [+►] to select <ADDRESS BOOK SET.>, then press [OK].

```
MENU
6 ADDRESS BOOK SET.
```

**3** Press [◄−] or [+►] to select <CODED DIAL>, then press [OK].

```
ADDRESS BOOK SET.
2 CODED DIAL
```

**4** Press [◄−] or [+►] to select the coded dial code (00 to 99) you want to erase, then press [OK].

Ex.

```
CODED DIAL
[*00]Canon C
```

You can also select a coded dial code by pressing [Coded Dial] followed by the two-digit code.

**5** Press and hold ⓒ [Clear] to erase the destination name, then press [OK].

```
NAME                [A]
_
```

**6** Press and hold ⓒ [Clear] to erase the fax number, then press [OK].

```
TEL NUMBER ENTRY
_
```

> **NOTE**
> If you erase the fax number, the registered name is cleared automatically.

**7** Press [Stop/Reset] to return to the standby mode.

# Storing/Editing Recipients for Group Dialing

**This section describes how to register destinations for group addresses and to edit the registered group addresses.**

## Registering Group Addresses

**NOTE**

The recipients must be registered in one-touch keys or coded dial codes beforehand.

**1** Press [Menu].

**2** Press [◄−] or [+►] to select <ADDRESS BOOK SET.>, then press [OK].

```
MENU
6   ADDRESS BOOK SET.
```

**3** Press [◄−] or [+►] to select <GROUP DIAL>, then press [OK].

```
ADDRESS BOOK SET.
3   GROUP DIAL
```

**4** Press [◄−] or [+►] to select an empty one-touch key that you want to set as the group address, then press [OK].

```
GROUP DIAL
[05] NOT REGISTERED
```

You can also select a one-touch dial key by pressing the corresponding one-touch dial key.

**5** Enter the group name (up to 20 letters, including spaces) with the numeric keys, then press [OK].

Ex.

```
NAME                    [A]
Canon Group
```

**6** Select the destinations you want to register in the group (up to 50 destinations) until all destinations are registered, then press [OK].

Ex.

```
NO.002=123XXXXXX
[02]Canon E
```

- To enter a recipient stored under a one-touch dial key, press the desired one-touch dial key.
- To enter a recipient stored under a coded dial code, press [Coded Dial], then enter the two-digit code with 0 – 9 [numeric keys]. For multiple entries, press [Coded Dial] between each entry.
- To register another group, repeat the procedure from step 4.

**NOTE**

You can review the destinations which have been already entered with [◄−] or [+►].

**7** Press [Stop/Reset] to return to the standby mode.

## Adding New Destination to Group

**1** Press [Menu].

**2** Press [◄−] or [+►] to select <ADDRESS BOOK SET.>, then press [OK].

```
MENU
6   ADDRESS BOOK SET.
```

**3** Press [◄−] or [+►] to select <GROUP DIAL>, then press [OK].

```
ADDRESS BOOK SET.
3   GROUP DIAL
```

**4** Press [◄−] or [+►] to select a group to edit, then press [OK].

Ex.

```
GROUP DIAL
[05]Canon Group
```

You can specify a group to edit by pressing the corresponding one-touch key.

**5** Press [OK].

Ex.

```
NAME                [A]
Canon Group
```

**6** Select the destination you want to add to the group, then press [OK].

Ex.

```
NO.003=123XXXXXX
[03]Canon F
```

For details on specifying a recipient from Address Book, see "Registering Group Addresses," on p. 3-9.

**7** Press [Stop/Reset] to return to the standby mode.

## Deleting Destination from Group

**1** Press [Menu].

**2** Press [◄−] or [+►] to select <ADDRESS BOOK SET.>, then press [OK].

```
MENU
6   ADDRESS BOOK SET.
```

**3** Press [◄−] or [+►] to select <GROUP DIAL>, then press [OK].

```
ADDRESS BOOK SET.
3   GROUP DIAL
```

**4** Press [◄−] or [+►] to select a group to edit, then press [OK].

Ex.

```
GROUP DIAL
[05]Canon Group
```

You can specify a group to edit by pressing the corresponding one-touch key.

**5** Press [OK].

Ex.

```
NAME                [A]
Canon Group
```

**6** Press [◄−] or [+►] to display the recipient you want to delete from the group, then press [Clear].

Ex.

```
NO.003=123XXXXXX
[03]Canon F
```

Repeat this step if you want to delete another recipient.

**7** Press [OK].

Ex.

```
NO.002=123XXXXXX
[02]Canon E
```

**8** Press [Stop/Reset] to return to the standby mode.

## Changing Group Name

**1** Press [Menu].

**2** Press [◄−] or [+►] to select <ADDRESS BOOK SET.>, then press [OK].

```
MENU
6  ADDRESS BOOK SET.
```

**3** Press [◄−] or [+►] to select <GROUP DIAL>, then press [OK].

```
ADDRESS BOOK SET.
3  GROUP DIAL
```

**4** Press [◄−] or [+►] to select a group to edit, then press [OK].

Ex.

```
GROUP DIAL
[05]Canon Group A
```

You can specify a group to edit by pressing the corresponding one-touch key.

**5** Press [+►] repeatedly to go to the character you want to change, then press [Clear].

Ex.

```
NAME                [A]
Canon Group A
```

To delete the entire name, press and hold [Clear].

**6** Enter a new character with 0 – 9 [numeric keys], then press [OK].

Ex.

```
NAME                [A]
Canon Group B
```

**7** Press [OK].

Ex.

```
GROUP DIAL
[05]Canon Group B
```

**8** Press [Stop/Reset] to return to the standby mode.

## Deleting Group Addresses

**1** Press [Menu].

**2** Press [◄−] or [+►] to select <ADDRESS BOOK SET.>, then press [OK].

```
MENU
6  ADDRESS BOOK SET.
```

**3** Press [◄−] or [+►] to select <GROUP DIAL>, then press [OK].

```
ADDRESS BOOK SET.
3  GROUP DIAL
```

**4** Press [◄−] or [+►] to select a group to delete, then press [OK].

Ex.

```
GROUP DIAL
[05]Canon Group
```

You can specify a group to delete by pressing the corresponding one-touch key.

**5** Press [OK].

Ex.

```
NAME                    [A]
Canon Group
```

**6** Press ⓒ [Clear] repeatedly until all recipients are deleted, then press [OK].

```
NO.001=
```

**NOTE**

When you delete all destinations, the registered name is cleared automatically.

**7** Press [Stop/Reset] to return to the standby mode.

# Copying

Chapter 4

**This chapter describes the copying features.**


**Overview of Copy Functions ..... 4-2**
**Basic Copying Method ..... 4-4**
**Canceling Copy Jobs ..... 4-5**
**Selecting Image Quality ..... 4-6**
**Adjusting Density ..... 4-8**
Adjusting Automatically ..... 4-8
Adjusting Manually ..... 4-9
**Enlarge/Reduce Images ..... 4-10**
Preset Zoom ..... 4-10
Custom Copy Ratio ..... 4-11
**Collating Copies ..... 4-13**
**Multiple Documents onto One Sheet (2 on 1) ..... 4-15**
2 on 1 Combination ..... 4-15
Copying ID Card ..... 4-16
**2-Sided Copying ..... 4-18**
1 to 2-Sided Copying ..... 4-19
2 to 2-Sided Copying (MF4380dn Only) ..... 4-20
2 to 1-Sided Copying (MF4380dn Only) ..... 4-21
**Selecting Paper Size Group ..... 4-22**
**Changing Standard Mode ..... 4-23**
**Printing a Sample Page ..... 4-24**
**Viewing Copy Settings ..... 4-25**

# Overview of Copy Functions

**In addition to enlarging/reducing copies, you can make 2-sided copies or use the 2 on 1 mode, which reduces 2 page documents to fit on one sheet of paper.**

## Using multi-purpose tray

- Standard paper sizes
- Irregular sizes of paper
- Envelopes

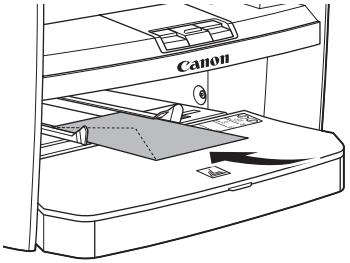


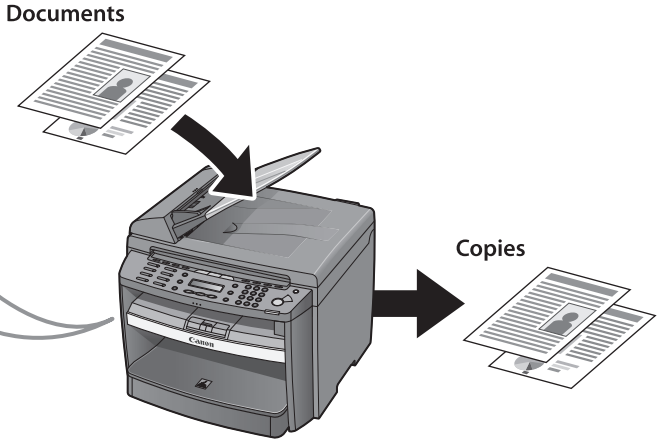


## Copy settings

### Image Quality (p. 4-6)

**Text Mode**

**Photo Mode**

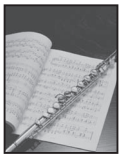

**Text/Photo**

**Text/Photo+**

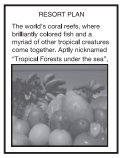


### Density (p. 4-8)

**Lighter**

Document

Copy

**Darker**

Document

Copy

# Various copy functions

## Enlarge/Reduce images (p. 4-10)

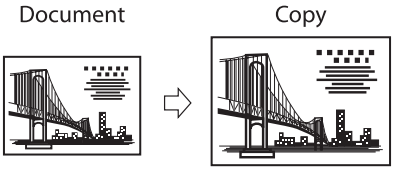


## 2-sided copying (p. 4-18)

1 to 2-sided copying

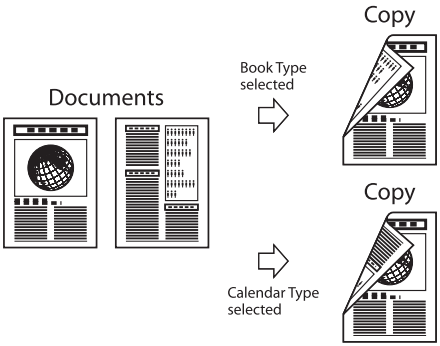


## 2 on 1 (p. 4-15)

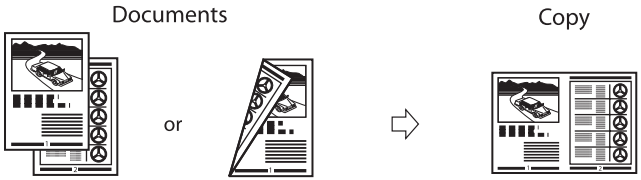


**NOTE**

The copy settings can be combined. For details, see the following descriptions for each setting.

# Basic Copying Method

**This section describes the basic procedure for copying.**

## 1 Place documents on the platen glass or load them in the ADF.

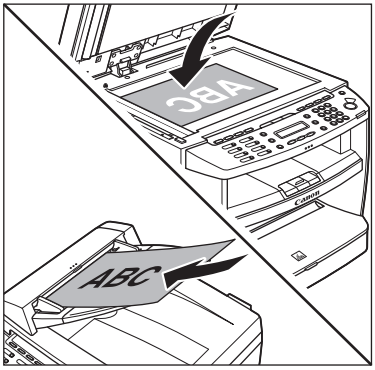


- For details, see "Placing Documents," on p. 2-4.
- Close the ADF/platen glass cover after placing your documents.
- For documents you can copy, see "Documents Requirements," on p. 2-2.

## 2 Press COPY [COPY].

- If you want to adjust the image quality, see "Selecting Image Quality," on p. 4-6.
- If you want to adjust the density, see "Adjusting Density" on p. 4-8.
- If you want to adjust the zoom ratio, see "Enlarge/Reduce Images" on p. 4-10.

**NOTE**

If you press and hold [OK] in the copy mode, a sample page will be printed. For details, see "Printing a Sample Page" on p. 4-24.

## 3 Use ⓪ – ⑨ [numeric keys] to enter the desired copy quantity (1 to 99).

Ex.

```
100%          LTR
◁ ■ ▷  TEXT/PHOTO    1
```

- The copy quantity appears on the right side of the display.
- If you make a mistake when entering values, press [Clear] and enter the correct values.

**NOTE**

You cannot change the copy quantity while the machine is copying.

## 4 Press ⊕ [Start].

# Canceling Copy Jobs

**You can cancel scanning or ongoing jobs.**

**NOTE**

If you cancel a copy job during scanning, make sure to remove the document.

**1** Press [Stop/Reset].

**2** When the <CANCEL COPYING?> message appears, press [◄ ━] to select <YES>.

```
CANCEL COPYING?
 <  YES          NO  >
```

The job is canceled, and the copy quantity is reset.

# Selecting Image Quality

**You can adjust the image quality of copies according to the types of documents. A correct selection is necessary for the optimal reproduction of the colors of the document. These settings return to the default values if the machine remains idle for a certain period of time or if you press [Stop/Reset].**
**The default settings is <TEXT/PHOTO>.**

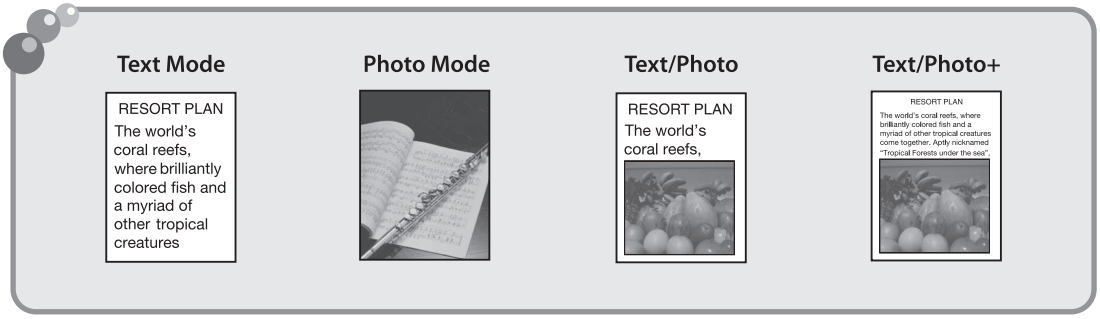


**NOTE**

- Combinations of these four modes (TEXT/PHOTO, TEXT, PHOTO, TEXT/PHOTO+) cannot be selected at the same time. If you select one of these modes, the previously set mode is canceled.
- If the document is a transparency, select the document type, then adjust the exposure to the most appropriate level for the document.

**1** Place documents.

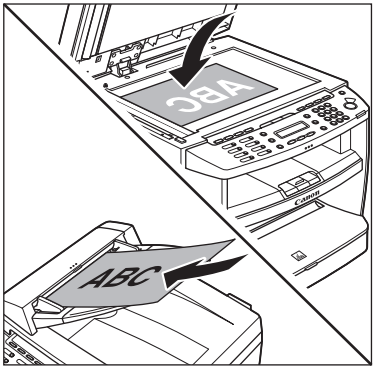


For details, see "Placing Documents," on p. 2-4.

**2** Press [COPY].

**3** Press [Image Quality] repeatedly to select the document type.

- <TEXT/PHOTO>: For documents that contain text and photos
- <TEXT>: For text documents
- <PHOTO>: For documents that contain fine text or photos
- <TEXT/PHOTO+>: For documents that contain fine text and photos

**NOTE**

Copy density automatically changes to the manual mode when <TEXT/PHOTO>, <PHOTO>, or <TEXT/PHOTO+> is set.

**4** Use ⓪ – ⑨ [numeric keys] to enter the desired copy quantity (1 to 99).

Ex.

```
100%          LTR
◁ ■ ▷  TEXT/PHOTO    1
```

**5** Press ⓘ [Start].

If you want to copy multiple documents using the platen glass, place a document and press ⓘ [Start] once for each page. When scanning is complete, press [OK].

# Adjusting Density

**You can adjust the density to the most appropriate level for the document either automatically or manually.**
**The default setting is <MANUAL> (5).**

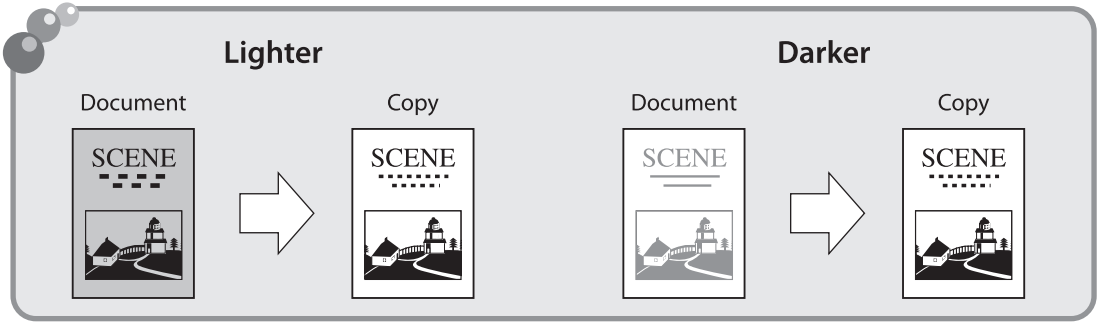




## Adjusting Automatically

You can adjust the density to the most appropriate level for the document automatically.

**1** Place documents.

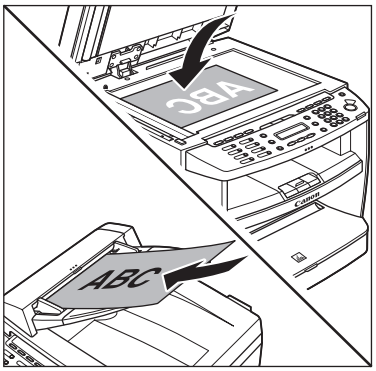


For details, see "Placing Documents," on p. 2-4.

**2** Press [COPY] [COPY].

**3** Press [Density] [Density] twice to select <AUTO>, then press [OK].

```
DENSITY
                    AUTO
```

**NOTE**

The image quality is automatically set to <TEXT>.

**4** Use 0 – 9 [numeric keys] to enter the desired copy quantity (1 to 99).

```
100%            LTR
◁ A ▷  TEXT          1
```

**5** Press [Start].

If you want to copy multiple documents using the platen glass, place a document and press [Start] once for each page. When scanning is complete, press [OK].

## Adjusting Manually

You can adjust the density to the most appropriate level for the document manually.

**1** Place documents.

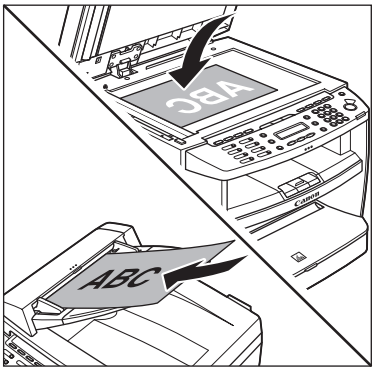


For details, see "Placing Documents," on p. 2-4.

**2** Press [COPY] [COPY].

**3** Press [ ] [Density] to select the manual mode.

**4** Press [◄–] or [+►] to adjust the copy density, then press [OK].

```
DENSITY
-LT   ◖□□□□□■□□□□□◗   DK+
```

– [+►]: to make light documents darker
– [◄–]: to make dark documents lighter

**NOTE**

– To cancel all settings, press [Stop/Reset].
– When you switch the mode by pressing the mode keys such as [FAX] [FAX], all settings will be canceled. If you want to keep the settings, set the density as follows:
[Menu] → <COPY SETTINGS> → <STANDARD SETTINGS> → <DENSITY> → <MANUAL> (See "COPY SETTINGS," on p. 12-4.)

**5** Use ⓪ – ⑨ [numeric keys] to enter the desired copy quantity (1 to 99).

Ex.

```
100%          LTR
◖  ■  ◗  TEXT/PHOTO    1
```

**6** Press [Start].

If you want to copy multiple documents using the platen glass, place a document and press [Start] once for each page. When scanning is complete, press [OK].

# Enlarge/Reduce Images

**You can convert a standard-sized document to a different standard-sized copy (preset zoom), or you can enlarge or reduce images in 1% increments (custom copy ratio). The default setting is <100%>.**

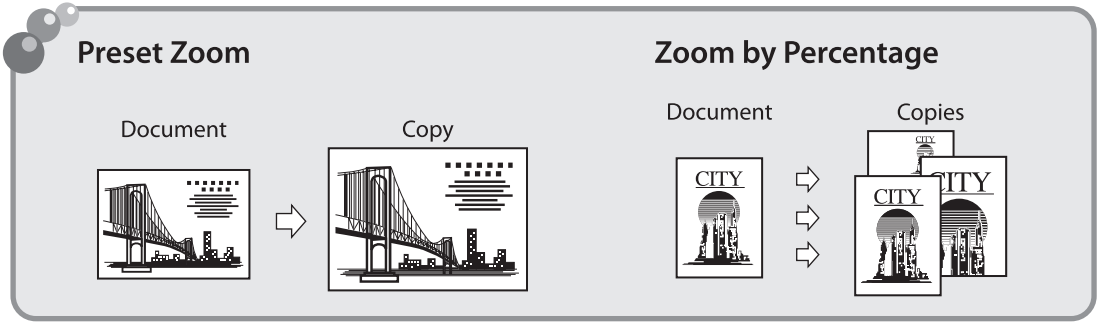




## Preset Zoom

You can enlarge or reduce standard size documents to another standard paper size.

**1** Place documents.

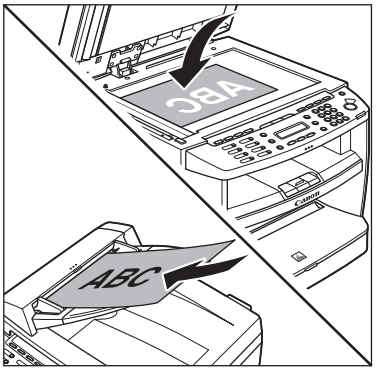


For details, see "Placing Documents," on p. 2-4.

**2** Press COPY [COPY].

**3** Press [Enlarge/Reduce].

```
PRESET RATIO
 -        100%        +
```

**4** Press [◄–] or [+►] to select the copy ratio, then press [OK].

Ex.

```
PRESET RATIO
     78% LGL → LTR
```

- <200% MAX.>
- <129% STMT → LTR>
- <100%>
- <78% LGL → LTR>
- <64%>
- <50% MIN.>

**NOTE**

When <PAPER SIZE GROUP> in the <COPY SETTINGS> menu is set to <A> or <AB>, the preset copy ratios change as follows:
A: 50%, 70%, 100%, 141%, 200%
AB: 50%, 70%, 81%, 86%, 100%, 115%, 122%, 141%, 200%

**5** Use ⓪ – ⑨ [numeric keys] to enter the desired copy quantity (1 to 99).

Ex.

```
 78%          LTR
◁ ■ ▷  TEXT/PHOTO
```

**6** Press ⊕ [Start].

If you want to copy multiple documents using the platen glass, place a document and press ⊕ [Start] once for each page. When scanning is complete, press [OK].

## Custom Copy Ratio

You can enlarge or reduce images by any copy ratio, in 1% increments. The available copy ratios are from 50% to 200%.

**1** Place documents.

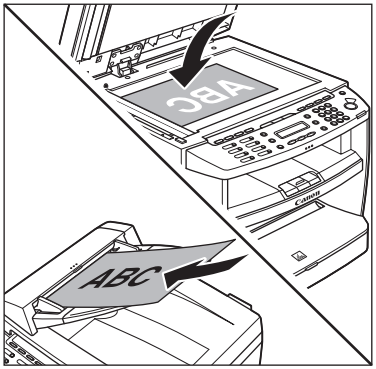


For details, see "Placing Documents," on p. 2-4.

**2** Press [COPY] [COPY].

**3** Press [ ] [Enlarge/Reduce] twice.

```
ZOOM   50-200%
 -        100%      +
```

**4** Use ⓪ – ⑨ [numeric keys] to enter the copy ratio, then press [OK].

Ex.

```
ZOOM   50-200%
 -        95%       +
```

You can also use [◄–] or [+►] to adjust the zoom ratio. To increase the zoom ratio, press [+►]. To decrease the copy ratio, press [◄–].

**NOTE**

To return the copy ratio to 100%, press [ ] [Enlarge/Reduce] repeatedly to display <100%>, then press [OK].

## 5 Use ⓪ – ⑨ [numeric keys] to enter the desired copy quantity (1 to 99).

Ex.

```
 95%          LTR
◐ ■ ◑  TEXT/PHOTO    1
```

## 6 Press ⓘ [Start].

If you want to copy multiple documents using the platen glass, place a document and press ⓘ [Start] once for each page. When scanning is complete, press [OK].

# Collating Copies

**You can sort copies into sets arranged in page order. This function is useful when making handouts for meetings. This feature can be used together with both "2-Sided Copying," (see p. 4-18) and "Multiple Documents onto One Sheet (2 on 1)," (see p. 4-15).**
**The default setting is <OFF>.**

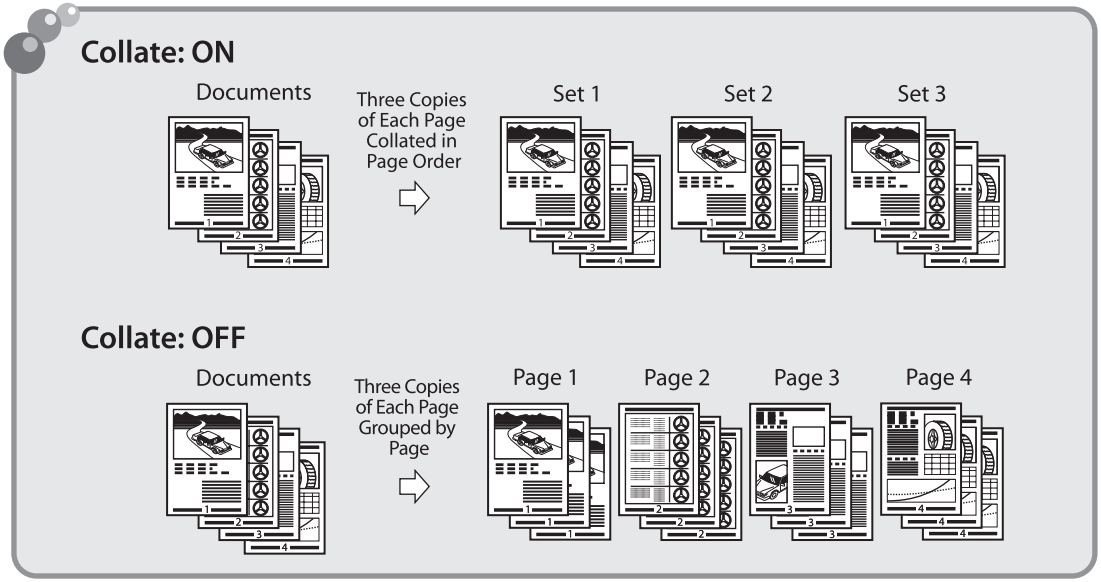


**1** Place documents.

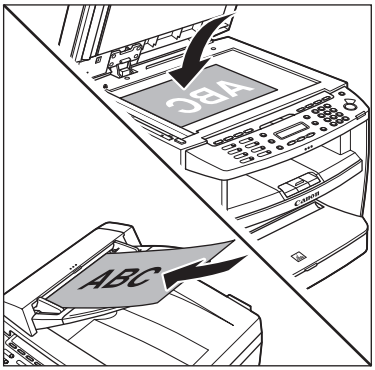


For details, see "Placing Documents," on p. 2-4.

**2** Press [COPY] [COPY].

> **NOTE**
> If <AUTO COLLATE> is set to <ON> in <STANDARD SETTINGS> in <COPY SETTINGS>, skip to step 4.

## 3 Press [Collate/2 on 1].

```
COLLATE/2 ON 1
                COLLATE
```

– If you want to use <COLLATE> and "2 on 1 Combination" (see p. 4-15) at the same time, select <COLLATE+2 ON 1>, then press [OK].
– If you want to use <COLLATE> and the 2-sided copying at the same time, go to step 3 of "1 to 2-Sided Copying" (see p. 4-19), "2 to 2-Sided Copying (MF4380dn Only)" (see p. 4-20) or "2 to 1-Sided Copying (MF4380dn Only)" (see p. 4-21).

## 4 Use 0 – 9 [numeric keys] to enter the desired copy quantity (1 to 99).

```
 63%          * LTR
 TEXT/PHOTO     1
```

## 5 Press [Start].

If you want to copy multiple documents using the platen glass, place a document and press [Start] once for each page. When scanning is complete, press [OK]. The machine prints the remaining sets of copies.

**NOTE**

– To cancel all settings, press [Stop/Reset].
– When you switch the mode by pressing the mode keys such as FAX [FAX], all settings will be canceled. If you want to keep the settings, set the collate mode as follows:
[Menu] → <COPY SETTINGS> → <STANDARD SETTINGS> → <AUTO COLLATE> → <ON> (See "COPY SETTINGS," on p. 12-4.)"
– When scanning multiple page documents, <MEMORY FULL> may appear in the display and scanning may be canceled. If this happens, press [Stop/Reset] to return to the standby mode.

# Multiple Documents onto One Sheet (2 on 1)

**This mode enables you to reduce two-page documents to fit on one sheet of paper (1-sided/ 2-sided).**

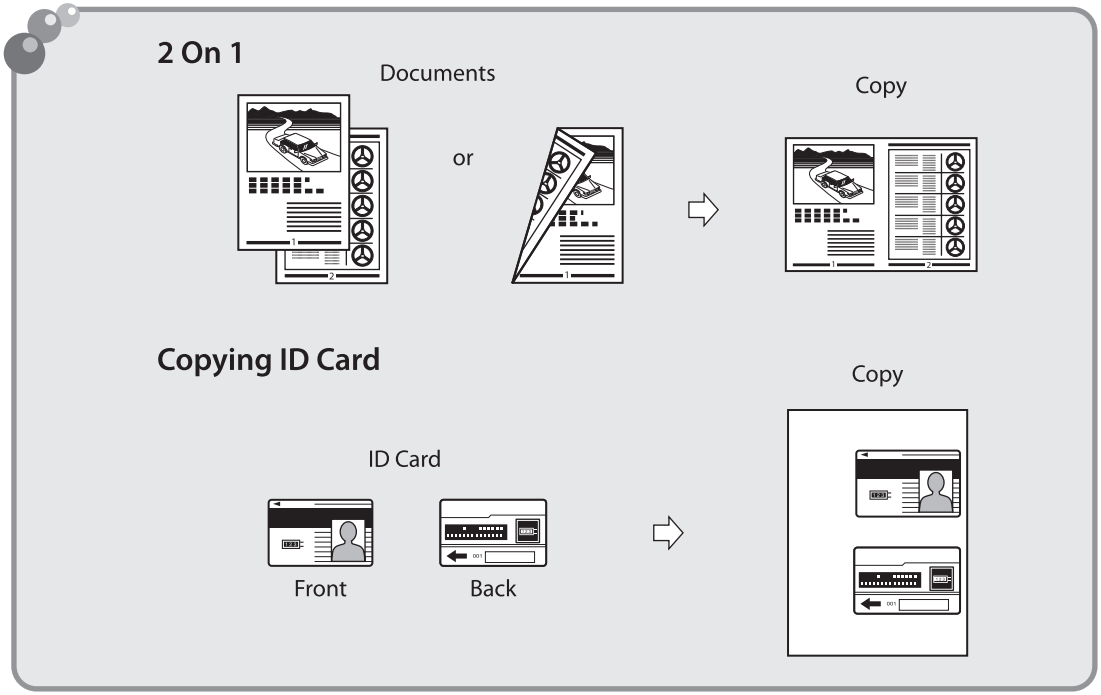


## 2 on 1 Combination

2 on 1 mode automatically reduces two documents to fit on the selected paper size. You can make well-organized copies by copying multiple documents onto one sheet. This mode enables you to cut print costs by saving copy papers, and it is also useful for saving space. This feature can be used together with both "Collating Copies" (see p. 4-13) and "2-Sided Copying" (see p. 4-18).

The default setting is <OFF>.

**NOTE**

The reduction ratio is automatically set so that the documents fit onto the selected paper size.

**1** Place documents.

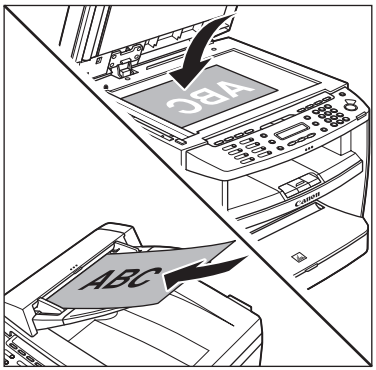


For details, see "Placing Documents," on p. 2-4.

**2** Press [COPY] [COPY].

**3** Press [Collate/2 on 1] repeatedly to select <2 ON 1>, then press [OK].

```
COLLATE/2 ON 1
                2 ON 1
```

– If you want to use <2 ON 1> and "Collating Copies" (see p. 4-13) at the same time, select <COLLATE+2 ON 1>, then press [OK].
– If you want to use <2 ON 1> and the 2-sided copying at the same time, go to step 3 of "1 to 2-Sided Copying" (see p. 4-19), "2 to 2-Sided Copying (MF4380dn Only)" (see p. 4-20) or "2 to 1-Sided Copying (MF4380dn Only)" (see p. 4-21).

**4** Use ⓪ – ⑨ [numeric keys] to enter the desired copy quantity (1 to 99).

```
 63%          * LTR
◁ ■ ▷  TEXT/PHOTO    1
```

**5** Press [Start].

– If you want to copy multiple documents using the platen glass, place a document and press [Start] once for each page. When scanning is complete, press [OK].

**NOTE**

– To cancel all settings, press [Stop/Reset].
– A maximum of 1/8" (4 mm) margin will be produced between the two reduced documents in 2 on 1 copying.

## Copying ID Card

You can make a copy of a 2-sided card onto one side of a paper. This mode is useful when copying ID cards.

**NOTE**

– You must place a document on the platen glass when using this function.
– The zoom ratio will automatically be set to <100%> with this feature. You cannot change the copy size.
– The paper size you can use is LTR or A4. If you select other paper size in the paper size setting, the ID card copy function will be canceled automatically.
– When you select the ID card copy, the other copy settings you made, such as the copy ratio and paper size, will be canceled automatically.
– This function cannot be used with the 2 on 1 mode, the collating mode, or the 2-sided copying mode.

**1** Place a card on the platen glass.

– Place a card as indicated below.

Ex.

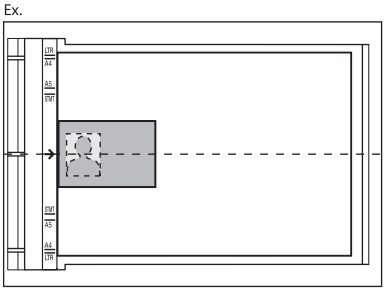


– Align the center of a card with the arrow mark.

**2** Press [COPY] [COPY].

**3** Press [Collate/2 on 1] repeatedly to select <ID CARD COPY>, then press [OK].

```
COLLATE/2 ON 1
          ID CARD COPY
```

**4** Use ⓪ – ⑨ [numeric keys] to enter the desired copy quantity (1 to 99).

Ex.

```
100%          * LTR
◁ ■ ▷  TEXT/PHOTO    1
```

**5** Press ⊕ [start].

**6** Turn and place the card.

– Place the card as indicated below.

Ex.

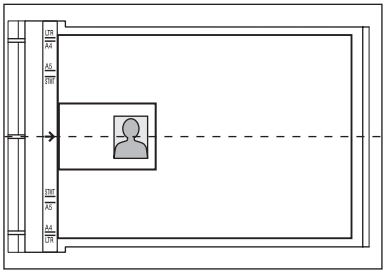


– Align the center of a card with the arrow mark.

**7** Press ⊕ [start].

**NOTE**

To cancel all settings, press ⊗ [Stop/Reset]

# 2-Sided Copying

**This mode enables you to make 2-sided copies from 1-sided documents. This enables you to cut print costs in half when copying in large quantities.**
**This feature can be used together with both "Collating Copies" (see p. 4-13) and "2 on 1 Combination" (see p. 4-15).**
**The default setting is <OFF>.**

## 1 to 2-Sided Copying

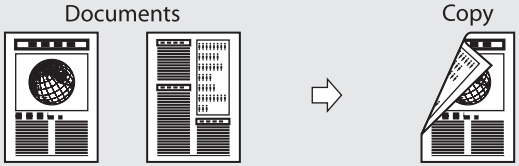


## 2 to 2-Sided Copying (MF4380dn Only)

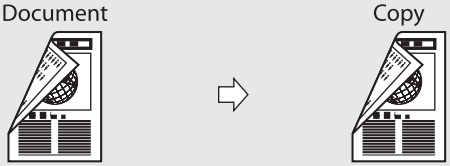


## 2 to 1-Sided Copying (MF4380dn Only)

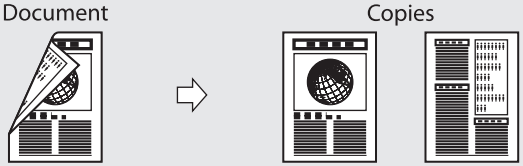


**NOTE**

Paper used to make 2-sided copies must conform to the following specifications:
- Paper size: LTR, A4 (envelopes cannot be used for 2-sided copying)
- Paper weight: 17 to 21 lb (64 to 80 g/m$^2$)

## 1 to 2-Sided Copying

You can make 2-sided copies from 1-sided documents.

**1** Place documents.

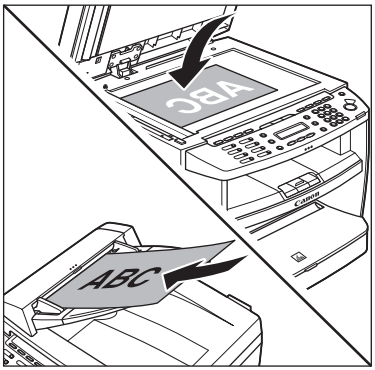


For details, see "Placing Documents," on p. 2-4.

**2** Press [COPY].

**3** Press ◯ [2-Sided] to select <1 >2-SIDED>, then press [OK].

```
2-SIDED
              1 > 2-SIDED
```

**NOTE**

If there are odd number of documents when the 1-Sided to 2-Sided mode is used, the back side of the last copy is left blank.

**4** Press [◄−] or [+►] to select <BOOK TYPE> or <CALENDAR TYPE>, then press [OK].

```
TYPE OF OUTPUT
              BOOK TYPE
```

– <BOOK TYPE>: The front and back sides of the copy will have the same top-bottom orientation.
– <CALENDAR TYPE>: The front and back sides of the copy will have the opposite top-bottom orientation.

**NOTE**

For the landscape oriented documents:
When <BOOK TYPE> is selected, the front and back sides of the copy will have the opposite top-bottom orientation. When <CALENDAR TYPE> is selected, the front and back sides of the copy will have the same top-bottom orientation.

**5** Use ⓪ – ⑨ [numeric keys] to enter the desired copy quantity (1 to 99).

Ex.

```
100%        * LTR
◖ ■ ◗ TEXT/PHOTO    1
```

**6** Press ⓘ [Start].

If you want to copy multiple documents using the platen glass, place a document and press ⓘ [Start] once for each page. When scanning is complete, press [OK].

**NOTE**

- To cancel all settings, press ⊘ [Stop/Reset].
- When you switch the mode by pressing the mode keys such as FAX [FAX], all settings will be canceled. If you want to keep the settings, store the settings as follows:
  ⊛ [Menu] → <COPY SETTINGS> → <STANDARD SETTINGS> → <2-SIDED> (See "COPY SETTINGS," on p. 12-4.)
- You can skip step 4. In this case, the machine scans 1-sided documents to make 2-sided, <BOOK TYPE> copies.

## 2 to 2-Sided Copying (MF4380dn Only)

You can make 2-sided copies from 2-sided documents.

**1** Place documents in the ADF.

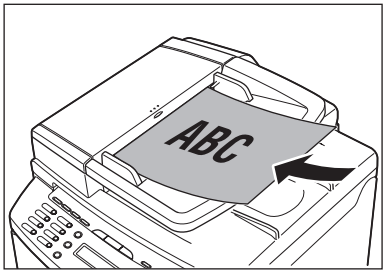


For details, see "Placing Documents," on p. 2-4.

**2** Press COPY [COPY].

**3** Press ◯ [2-Sided] repeatedly to select <2 > 2-SIDED>, then press [OK].

```
2-SIDED
            2 > 2-SIDED
```

**4** Press [◄−] or [+►] to select <BOOK TYPE> or <CALENDAR TYPE> for the document layout, then press [OK].

```
TYPE OF ORIGINAL
            BOOK TYPE
```

- <BOOK TYPE>: The front and back sides of the document will have the same top-bottom orientation.
- <CALENDAR TYPE>: The front and back sides of the document will have the opposite top-bottom orientation.

**5** Press [◄−] or [+►] to select <BOOK TYPE> or <CALENDAR TYPE> for the output layout, then press [OK].

```
TYPE OF OUTPUT
            BOOK TYPE
```

- <BOOK TYPE>: The front and back sides of the copy will have the same top-bottom orientation.
- <CALENDAR TYPE>: The front and back sides of the copy will have the opposite top-bottom orientation.

**6** Use ⓪ – ⑨ [numeric keys] to enter the desired copy quantity (1 to 99).

Ex.

```
100%        * LTR
◐ ■ ◑  TEXT/PHOTO    1
```

**7** Press ⓘ [Start].

> **NOTE**
> – To cancel all settings, press ⓢ [Stop/Reset].
> – When you switch the mode by pressing the mode keys such as [FAX] [FAX], all settings will be canceled. If you want to keep the settings, store the settings as follows:
> ⊛ [Menu] → <COPY SETTINGS> → <STANDARD SETTINGS> → <2-SIDED> (See "COPY SETTINGS," on p. 12-4.)
> – You can skip steps 5 and 6. In this case, the machine scans 2-sided documents in the <BOOK TYPE> orientation and outputs the same way.
> – If you press ⓘ [Start] in step 5 after selected <CALENDAR TYPE>, the machine scans 2-sided documents in the <CALENDAR TYPE> orientation and outputs the same way.

## 2 to 1-Sided Copying (MF4380dn Only)

You can make 1-sided copies from 2-sided documents.

**1** Place documents in the ADF.

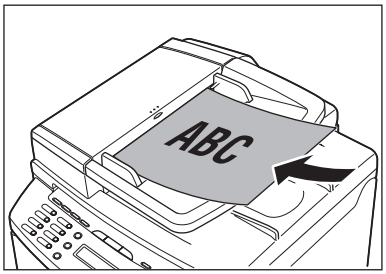


For details, see "Placing Documents," on p. 2-4.

**2** Press [COPY] [COPY].

**3** Press ◯ [2-Sided] to select <2 >1-SIDED>, then press [OK].

```
2-SIDED
            2 > 1-SIDED
```

**4** Press [◄ −] or [+ ►] to select <BOOK TYPE> or <CALENDAR TYPE>, then press [OK].

```
TYPE OF ORIGINAL
              BOOK TYPE
```

– <BOOK TYPE>: The front and back sides of the document have the same top-bottom orientation.
– <CALENDAR TYPE>: The front and back sides of the document will have the opposite top-bottom orientation.

**5** Use ⓪ – ⑨ [numeric keys] to enter the desired copy quantity (1 to 99).

Ex.

```
100%        * LTR
◄ ■ ►  TEXT/PHOTO    1
```

**6** Press ⓘ [Start].

> **NOTE**
> – To cancel all settings, press ⓢ [Stop/Reset].
> – When you switch the mode by pressing the mode keys such as [FAX] [FAX], all settings will be canceled. If you want to keep the settings, store the settings as follows:
> ⊛ [Menu] → <COPY SETTINGS> → <STANDARD SETTINGS> → <2-SIDED> (See "COPY SETTINGS," on p. 12-4.)
> – You can skip step 4. In this case, the machine scans 2-sided documents in the <BOOK TYPE> orientation to make 1-sided copies.

# Selecting Paper Size Group

**This section describes how to select the paper size group.**
**The default setting is <INCHES>.**

**1** Press [Menu].

**2** Press [◄−] or [+►] to select <COPY SETTINGS>, then press [OK].

```
MENU
4   COPY SETTINGS
```

**3** Press [◄−] or [+►] to select <PAPER SIZE GROUP>, then press [OK].

```
COPY SETTINGS
2   PAPER SIZE GROUP
```

**4** Press [◄−] or [+►] to select a paper size group, then press [OK].

```
PAPER SIZE GROUP
                INCHES
```

You can select from the following paper size groups: <INCHES>, <A>, <AB>

# Changing Standard Mode

**The Standard mode is the combination of copy modes that the machine automatically applies when the power is turned ON, or when [Stop/Reset] is pressed. You can change the Standard mode to suit your needs.**

**The default settings are the followings:**

- **<IMAGE QUALITY>: <TEXT/PHOTO>**
- **<DENSITY>: <MANUAL> (5)**
- **<ZOOM RATIO>: <100%>**
- **<AUTO COLLATE>: <OFF>**
- **<2-SIDED>: <OFF>**

**1** Press [Menu].

**2** Press [◄−] or [+►] to select <COPY SETTINGS>, then press [OK].

```
MENU
4   COPY SETTINGS
```

**3** Press [◄−] or [+►] to select <STANDARD SETTINGS>, then press [OK].

```
COPY SETTINGS
1   STANDARD SETTINGS
```

**4** Press [◄−] or [+►] to select the desired setting item, then press [OK].

```
STANDARD SETTINGS
1   IMAGE QUALITY
```

You can specify the following settings:
- <IMAGE QUALITY>
- <DENSITY>
- <ZOOM RATIO>
- <AUTO COLLATE>
- <2-SIDED>

**NOTE**

If you press [Stop/Reset] before pressing [OK], the setting will not be registered.

**5** Press [Stop/Reset] to return to the standby mode.

**NOTE**

Press [Menu] to return to the previous display.

# Printing a Sample Page

**This machine enables you to print a sample page. You can use this function to test how the printouts will look with current settings.**

**NOTE**

- The paper size must be LTR.
- The paper type must be Plain Paper (17 to 21 lb (64 to 80 g/m$^2$)).
- If the paper setting is not appropriate or the paper is not loaded correctly, printing does not start without any error messages.
- You cannot cancel printing a sample page once printing has started.
- You cannot use this function while making copies, scanning documents, or printing reports/lists.

**1** Press COPY [COPY].

**2** Press and hold [OK].

The sample page will be printed on the both sides of the paper.

# Viewing Copy Settings

**You can check the current copy settings for <COLLATE>, <2-SIDED>, <2 ON 1>, and <ID CARD COPY>.**

**1** Press ◯ [Job Cancel/Status Monitor] repeatedly to select <VIEW SETTINGS>, then press [OK].

```
VIEW SETTINGS
```

The current settings for <COLLATE>, <2-SIDED>, <2 ON 1>, and <ID CARD COPY> appear on the LCD display.

```
2 ON 1
```

# Fax

# Chapter 5

**This chapter describes how to use fax functions.**


**Overview of Fax Functions.....5-2**
**Introduction to Using Fax Functions.....5-4**
Methods for Receiving Faxes.....5-4
Selecting the Receive Mode.....5-10
Setting the Current Date and Time.....5-11
Setting the Type of Telephone Line.....5-11
Registering the Machine's Name.....5-12
Registering Your Machine's Fax Number.....5-12
**Sending Fax Documents.....5-13**
Basic Methods for Sending Faxes.....5-13
Calling the Recipient before Sending Fax Documents (Manual Sending).....5-13
Switching Temporarily to Tone Dialing.....5-14
Dialing an Overseas Number (With Pauses).....5-15
Basic Methods for Sending PC Faxes.....5-16
**Canceling Sending Fax Documents.....5-17**
**Specifying Destinations.....5-18**
Specifying a New Fax Number.....5-18
Using the One-Touch Keys.....5-19
Using Coded Dial Codes.....5-19
Using the Group Addresses.....5-20
Using the Address Book Key.....5-20
Sending Documents to More Than One Location (Broadcasting).....5-21
**Adjusting Density.....5-23**
**Selecting Image Quality.....5-24**
**2-Sided Document (MF4380dn Only).....5-25**
**Redialing When the Line Is Busy.....5-26**
Redialing Manually.....5-26
Redialing Automatically.....5-26
**Checking the Dial Line before Sending.....5-28**
**Changing Standard Mode.....5-29**
**Send Start Speed.....5-30**
**Printing Received Documents on Both Sides of Paper.....5-31**
**Reducing a Received Document.....5-32**
**Printing Footer Information on a Received Document.....5-33**
**Specifying the Way of Printing When Toner Runs Out.....5-34**
**Setting the Incoming Ring.....5-35**
**Receiving Documents Manually with an External Telephone (Remote RX).....5-36**
Activating the Remote Reception.....5-36
Receiving Documents with the Remote Reception.....5-37
**Selecting the Receive Mode for Printing.....5-38**
**Rejecting Incoming Faxes from the Unidentified Senders.....5-39**
**Receive Start Speed.....5-40**
**Receiving Documents in Memory without Printing Out (Memory Lock Reception).....5-41**
**Printing All Documents Stored in the Memory Lock Reception Mode.....5-43**
**Forwarding Received Fax Documents in Memory..5-44**
**Checking/Changing the Status of Fax Documents in Memory.....5-45**
Checking/Deleting Fax Transmission Documents.....5-45
Checking/Deleting Fax Reception Documents.....5-46
Checking the Fax Log.....5-46

# Overview of Fax Functions

**In addition to the Super G3 fax function, you can send faxes from your computer. You can also forward received fax documents to specified destinations.**

## Various variety of faxes

**Fax** (p. 5-13)

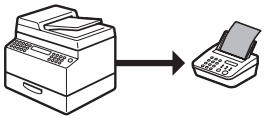

**PC Fax** (p. 5-16)

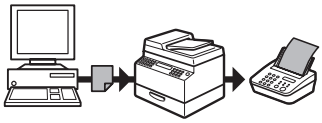

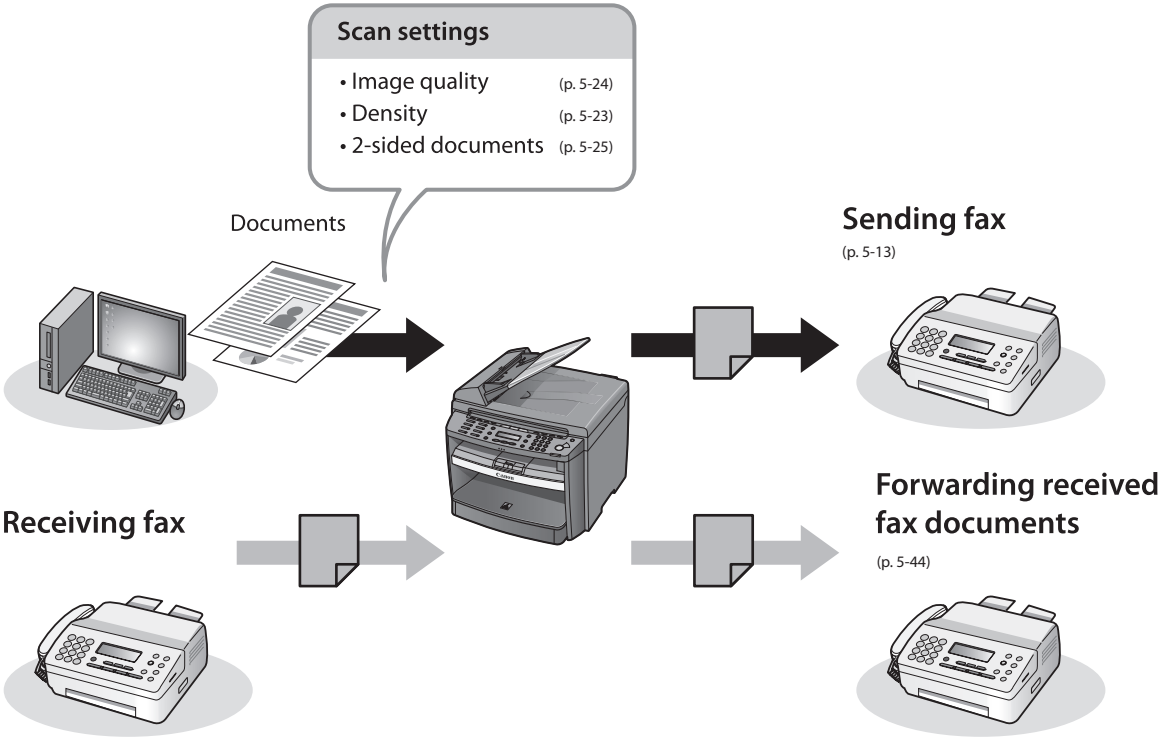

# Various sending functions

## Specifying destinations (p. 5-18)

Using the address book

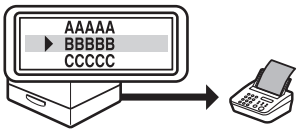


Broadcasting

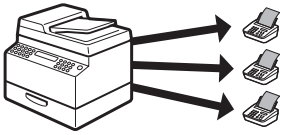

Using the one-touch keys

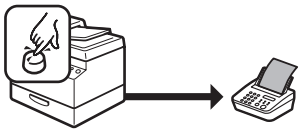

Using the group address

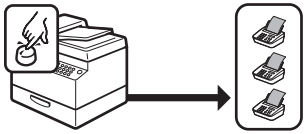

# Various receiving functions

Memory lock reception (p. 5-41)

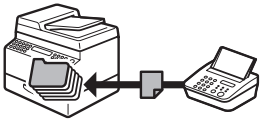

Remote reception (p. 5-36)

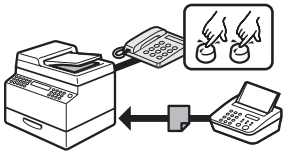

# Introduction to Using Fax Functions

**This section describes the settings you need to make before using fax functions.**
**Make sure to set the following items first:**

- Your fax number
  Register your machine's fax number. (See "Registering Your Machine's Fax Number," on p. 5-12.)
- Your personal name or company name
  Register your name or company name. (See "Registering the Machine's Name," on p. 5-12.)
- Time and date
  Set the current time and date. (See "Setting the Current Date and Time," on p. 5-11.)
- Your telephone line type
  Set the type of telephone line that is connected to the machine. (See "Setting the Type of Telephone Line," on p. 5-11.)
- Fax receiving mode
  Set how the machine receives fax documents to suit your needs. (See "Methods for Receiving Faxes," on p. 5-4.)



## Methods for Receiving Faxes

Your machine offers several methods for receiving fax documents. You can receive documents automatically or manually. Follow the chart below to choose the fax receive mode that best suits your needs.
The default setting is <FaxOnly>.

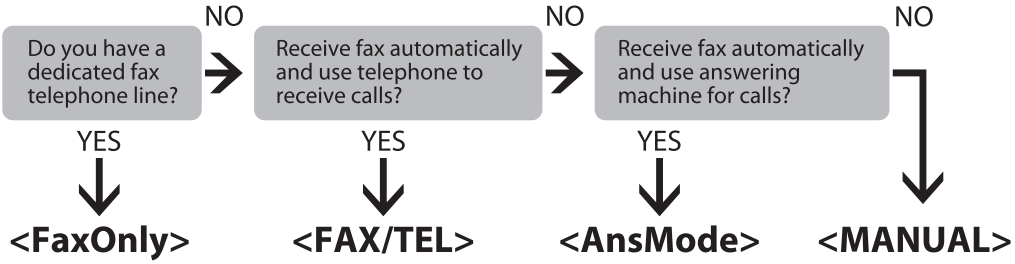


**NOTE**

Printing fax documents and scanning documents over the network cannot be processed at the same time. If this happens, these documents are handled differently depending on the following:

- If you scan documents when the machine is receiving fax documents, or the machine receives fax documents when scanning documents, the machine scans documents first, then starts printing the fax documents when scanning is complete.
- If you scan documents when the machine is printing received fax documents, scanning is canceled. Wait for the fax documents to be printed out, then perform the scanning operation again.

## FaxOnly

In this mode, the machine receives documents automatically. Select this mode if you use the machine for fax operations only, and not for voice communications using an external telephone.

● Before using this mode

Simply set the receive mode to <FaxOnly>. (See "Selecting the Receive Mode," on p. 5-10.)

● When an incoming call is received

– With no external telephone connected to the machine:

- For fax calls, the machine receives fax documents automatically.
- For telephone calls, you cannot talk to the caller.

– With external telephone connected to the machine:

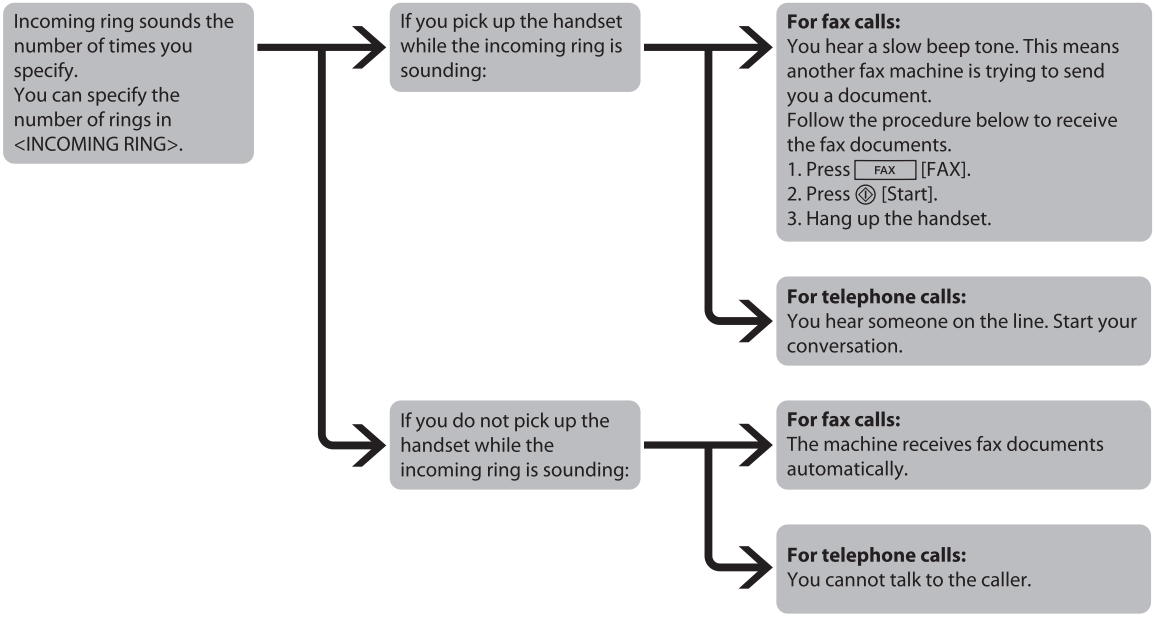


**NOTE**

If you want to change <INCOMING RING>, see "Setting the Incoming Ring," on p. 5-35.

## FAX/TEL

In this mode, the machine receives documents automatically for fax calls and rings for telephone calls.

● Before using this mode

Make sure to do the following:

– Connect your external telephone to the machine. (See "Make Fax Settings," in the Starter Guide.)

– Set the receive mode to <FAX/TEL>. (See "Selecting the Receive Mode," on p. 5-10.)

● When an incoming call is received

The machine detects whether the call is a fax or telephone call within a limited time.
For fax calls, the machine receives fax documents automatically.
For telephone calls, the machine rings.
・You can specify the length of the detection time in <RING START TIME>.
・You can specify the length of ring time in <F/T RING TIME>.

→ If you pick up the handset while the machine is ringing: → You hear someone on the line. Start your conversation.

→ If you do not pick up the handset while the machine is ringing: → The machine disconnects the call or switches to the fax receive mode. You can specify which action is taken in <F/T SWITCH ACTION>.

**NOTE**

If you want to change <RING START TIME>, <F/T RING TIME>, or <F/T SWITCH ACTION>, see "Selecting the Receive Mode," on p. 5-10.

## AnsMode

In this mode, the machine receives documents automatically for fax calls and your answering machine records a message for telephone calls.

● Before using this mode

Make sure to do the following:

– Connect your external telephone with built-in answering machine to the machine. (See "Make Fax Settings," in the Starter Guide.)
– Set your answering machine to answer after 1 to 2 rings.
– Record a message on your answering machine. (When you record a message, we recommend you insert about 4 seconds of silence at the beginning of the message, or limit the message to 20 seconds.)
– Set the receive mode to <AnsMode>. (See "Selecting the Receive Mode," on p. 5-10.)

● When an incoming call is received

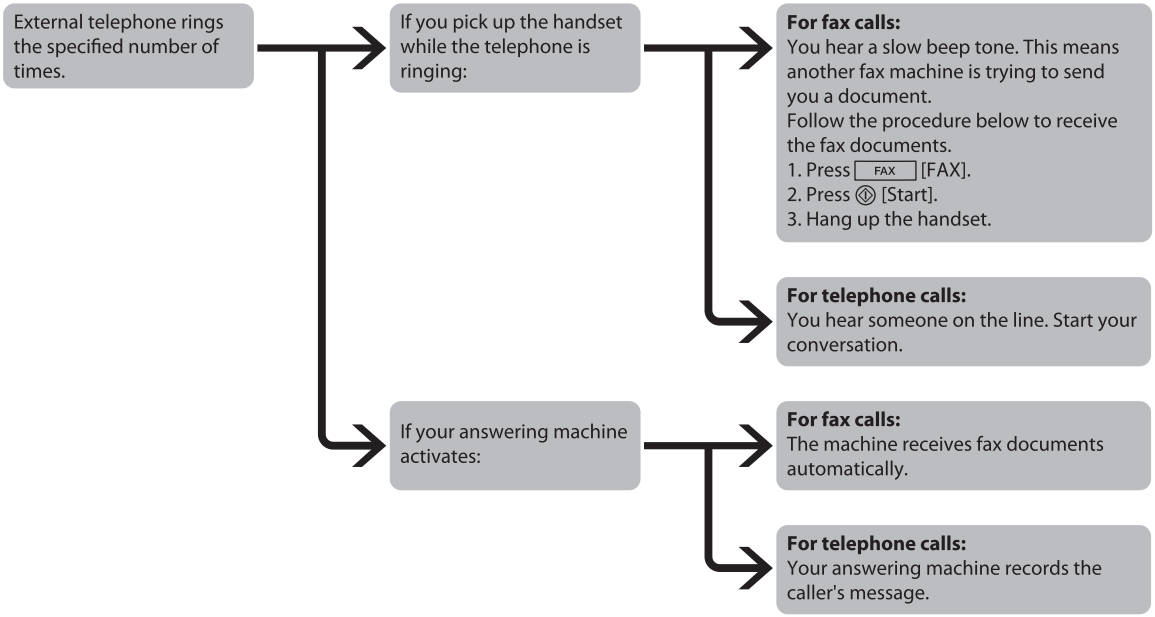


**NOTE**

– This mode does not support voice mail.
– Make sure to change the receive mode if you turn off your answering machine; otherwise, the machine cannot receive fax documents automatically.

## MANUAL

In this mode, you can monitor all incoming calls by picking up the handset each time your telephone rings. This mode is a suitable option if you expect to use the machine mainly as a telephone, and only occasionally receive fax documents.

● Before using this mode

Make sure to do the following:

– Connect your external telephone to the machine. (See "Make Fax Settings," in the Starter Guide.)

– Set the receive mode to <MANUAL>. (See "Selecting the Receive Mode," on p. 5-10.)

● When an incoming call is received

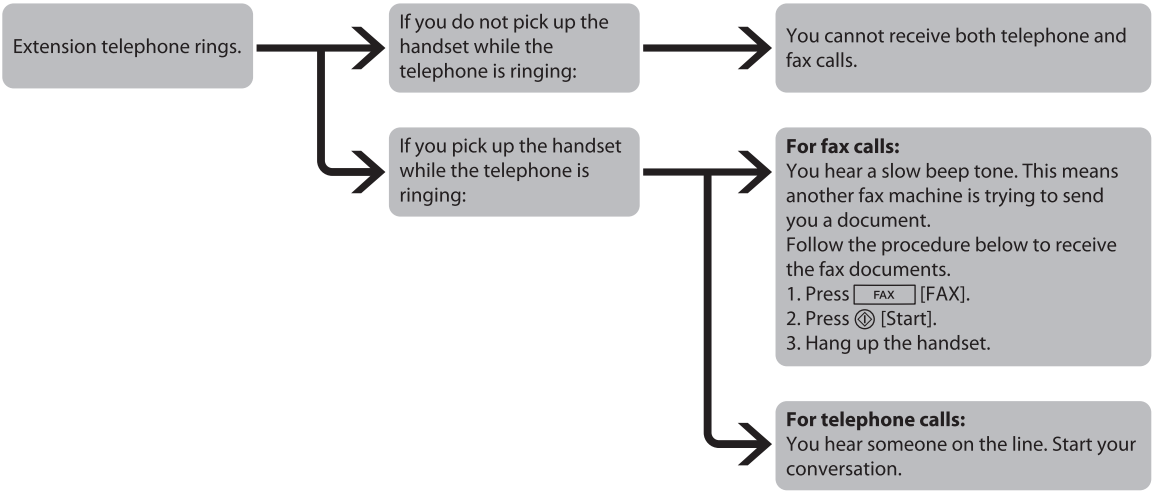


*If <REMOTE RX> is set to <ON>, you can also start to receive fax documents by dialing from your telephone. (See "Receiving Documents Manually with an External Telephone (Remote RX)," on p. 5-36.)

## DRPD

DRPD (Distinctive Ring Pattern Detection) service assigns two or more telephone numbers with distinctive ring patterns to a single telephone line, allowing you to have both a fax number(s) and a telephone number(s) using only one telephone line. Your fax will automatically monitor incoming calls and based on the ring pattern, will let you know if the call is a fax or voice call. Set the fax ring pattern that matches the pattern assigned by your telephone company. Contact your telephone company for availability.

● Before using this mode

Make sure to do the following:

– Subscribe to a DRPD service. Contact your telephone campany for availability.
– Connect your external telephone to the maxhine. (See "Make Fax Settings," in the Starter Guide.)
– Set the receive mode to <DRPD>. (See "Selecting the Receive Mode," on p. 5-10.)

## Selecting the Receive Mode

You can set the fax receive mode to suit your needs. The default setting is <FaxOnly>.

**1** Press ⊛ [Menu].

**2** Press [◄−] or [+►] to select <FAX SETTINGS>, then press [OK].

```
MENU
5   FAX SETTINGS
```

**3** Press [◄−] or [+►] to select <RX MODE>, then press [OK].

```
FAX SETTINGS
1   RX MODE
```

**4** Press [◄−] or [+►] to select the desired receive mode, then press [OK].

```
RX MODE
                FaxOnly
```

For <FAX/TEL> and <DRPD>, you can specify optional settings.

■ If you select <FAX/TEL>:

①Press [◄−] or [+►] to select <RING START TIME>, then press [OK].

```
FAX/TEL OPT. SET
1   RING START TIME
```

②Press [◄−] or [+►] to specify the duration (4 to 30 seconds) for which the machine attempts to detect the fax tone before it starts ringing, then press [OK].

```
RING START TIME
                  6SEC
```

**NOTE**

– If the machine receives a fax, the machine does not ring and switches to the receive mode automatically.
– The default setting is <6SEC>.

③Press [◄−] or [+►] to select <F/T RING TIME>, then press [OK].

```
FAX/TEL OPT. SET
2   F/T RING TIME
```

④Press [◄−] or [+►] to specify the duration (10 to 45 seconds) of ringing, then press [OK].

```
F/T RING TIME
                  22SEC
```

**NOTE**

The default setting is <22SEC>.

⑤Press [◄−] or [+►] to select <F/T SWITCH ACTION>, then press [OK].

```
FAX/TEL OPT. SET
3   F/T SWITCH ACTION
```

⑥Press [◄−] or [+►] to select the action the machine will take after the ringing ends, then press [OK].

```
F/T SWITCH ACTION
                RECEIVE
```

– <RECEIVE>: Receives a fax.
– <DISCONNECT>: Disconnects the call.

■ If you select <DRPD>:

①Press [◄−] or [+►] to select a ring pattern, then press [OK].

```
DRPD:SELECT FAX
          NORMAL RING
```

**5** Press [Stop/Reset] to return to the standby mode.

> **NOTE**
>
> If you cannot make telephone calls using an external telephone when the receive mode is set to <FAX/TEL>, make the settings described below.
> [MENU] → <FAX SETTINGS> → <USER SETTINGS> → set <PUBLIC LINE> to <ADAPTER 1>.
> If the problem persists, set <PUBLIC LINE> to <ADAPTER 2>.
> * The default setting is <DIRECT>.
> If you set <PUBLIC LINE> to <ADAPTER 1> or <ADAPTER 2>, do not connect the supplied telephone cable directly to the wall jack and the telephone line jack on the back side of the machine.

## Setting the Current Date and Time

You can set the current date and time. The current date and time settings are used as standard timer settings for functions that require them.

**1** Press [Menu].

**2** Press [◄−] or [+►] to select <TIMER SETTINGS>, then press [OK].

```
MENU
8   TIMER SETTINGS
```

**3** Press [◄−] or [+►] to select <DATE&TIME SETTING>, then press [OK].

```
TIMER SETTINGS
1   DATE&TIME SETTING
```

**4** Use 0 – 9 [numeric keys] to enter the date (month/day/year) and time (in 24-hour format), then press [OK].

```
DATE&TIME SETTINGS
17:50        07 31 '08
```

**5** Press [Stop/Reset] to return to the standby mode.

## Setting the Type of Telephone Line

Set the type of telephone line that is connected to the machine.
If this setting is incorrect, you will be unable to communicate with other machines. Make sure to check the type of telephone line that you are using, and make the correct setting.
The default setting is <TOUCH TONE>.

**1** Press [Menu].

**2** Press [◄−] or [+►] to select <FAX SETTINGS>, then press [OK].

```
MENU
5   FAX SETTINGS
```

**3** Press [◄−] or [+►] to select <USER SETTINGS>, then press [OK].

```
FAX SETTINGS
2   USER SETTINGS
```

**4** Press [◄−] or [+►> ] to select <TEL LINE TYPE>, then press [OK].

```
USER SETTINGS
3   TEL LINE TYPE
```

**5** Press [◄−] or [+►] to select the telephone line type, then press [OK].

```
TEL LINE TYPE
TOUCH TONE
```

- <TOUCH TONE>: Tone dialing (default)
- <ROTARY PULSE>: Pulse dialing
- If you do not know the telephone line type, call your telephone service provider for details.

**6** Press [Stop/Reset] to return to the standby mode.

## Registering the Machine's Name

Your name or company's name must be registered as the machine's name.
When you send a document, the name that you registered is printed as the sender's name on the recipient's paper.

**1** Press [Menu].

**2** Press [◄−] or [+►] to select <FAX SETTINGS>, then press [OK].

```
MENU
5   FAX SETTINGS
```

**3** Press [◄−] or [+►] to select <USER SETTINGS>, then press [OK].

```
FAX SETTINGS
2   USER SETTINGS
```

**4** Press [◄−] or [+►] to select <UNIT NAME>, then press [OK].

```
USER SETTINGS
2   UNIT NAME
```

**5** Use 0 – 9 [numeric keys] to enter the unit name (up to 32 characters), then press [OK].

```
UNIT NAME          [A]
CANON
```

**6** Press [Stop/Reset] to return to the standby mode.

## Registering Your Machine's Fax Number

Your machine's fax number must be registered.
When you send a document, the number that you registered is printed on the recipient's paper.

**1** Press [Menu].

**2** Press [◄−] or [+►] to select <FAX SETTINGS>, then press [OK].

```
MENU
5   FAX SETTINGS
```

**3** Press [◄−] or [+►] to select <USER SETTINGS>, then press [OK].

```
FAX SETTINGS
2   USER SETTINGS
```

**4** Press [◄−] or [+►] to select <UNIT TELEPHONE #>, then press [OK].

```
USER SETTINGS
1   UNIT TELEPHONE #
```

**5** Use 0 – 9 [numeric keys] to enter your fax/telephone number (up to 20 digits, including spaces), then press [OK].

Ex.

```
UNIT TELEPHONE #
012XXXXXXX
```

**6** Press [Stop/Reset] to return to the standby mode.

# Sending Fax Documents

**This section describes the settings and procedures for sending fax documents.**

## Basic Methods for Sending Faxes

This section describes the flow of sending faxes.

**1** Place documents.

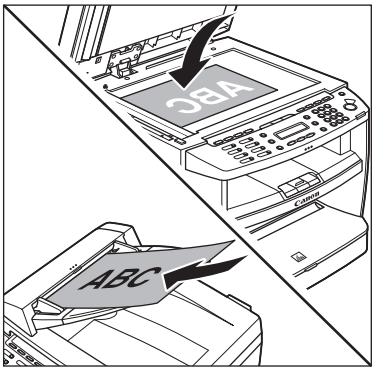


**2** Press [FAX] [FAX].

**3** Adjust any necessary scan settings for your documents.

For details, see "Adjusting Density," on p. 5-23, "Selecting Image Quality," on p. 5-24, and "2-Sided Document (MF4380dn Only)," on p. 5-25.

**4** Enter the fax number using ⓪ – ⑨, ⊞ [numeric keys] and ⊛ [Tone].

Ex.

```
= 0 3 1 X X X X X X
```

If you enter a wrong number when specifying a fax number, press [Stop/Reset].

**5** Press [Start].

When you place the documents on the platen glass, press [◄–] or [+►] to select the document size, then press [Start] for each document. When scanning is complete, press [OK] to start sending.

## Calling the Recipient before Sending Fax Documents (Manual Sending)

Use manual sending when you want to talk to the recipient before sending a document, or if the recipient does not have a fax machine that can receive automatically.

**NOTE**

- You cannot use the platen glass for manual sending.
- You cannot use group addresses for manual sending.
- You cannot use 2-Sided scanning mode for manual sending.

**1** Connect an external telephone to the machine if you want to talk to the recipient before sending a document.

For information on how to connect an external telephone to the machine, see "Make Fax Settings," in the Starter Guide or "Setting Up the Machine," in the e-Manual.

**2** Place documents in the ADF.

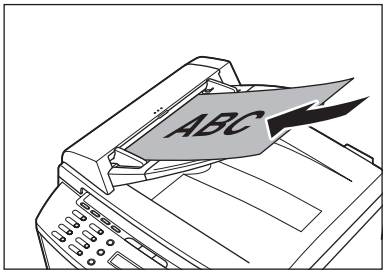


**3** Press [FAX] [FAX].

**4** Adjust any necessary settings for your documents.

For details, see "Adjusting Density," on p. 5-23, "Selecting Image Quality," on p. 5-24, and "2-Sided Document (MF4380dn Only)," on p. 5-25.

**5** Press [Hook] or pick up the handset of your external telephone.

If you press [Hook], you can temporarily adjust the monitor tone volume with [◄–] and [+►].

**6** Dial the recipient's fax number.

> **NOTE**
> Make sure to confirm the dial tone before entering a fax number. If you enter the number before the dial tone is heard, the call may not connect, or the wrong number may be dialed.

**7** Talk through the handset to the recipient.

- If you press [Hook] in step 5, you can pick up the handset when you hear the recipient's voice.
- If you hear a high-pitched signal instead of the recipient's voice, go to step 9.

**8** Ask the recipient to set their fax machine to receive faxes.

**9** When you hear a high-pitched signal, press [Start], then hang up the handset.

Scanning starts, and the scanned data is sent to the specified destination when scanning is complete.

## Switching Temporarily to Tone Dialing

If your machine is set for pulse dialing, use the procedure below to switch to tone dialing to use information services (e.g., banks, airline reservations, and hotel reservations).

> **NOTE**
> To talk to the other party, you will need to connect an external telephone to the machine.

**1** Press [FAX] [FAX].

**2** Press [Hook].

> **NOTE**
> Make sure to confirm the dial tone before entering a fax number. If you enter the number before the dial tone is heard, the call may not be connected, or the wrong number may be dialed.

**3** Enter the number of the fax information service using 0 – 9 [numeric keys].

Ex.

```
= 0 3 1 X X X X X X
```

**4** When the recorded message of the information service answers, press * [Tone] to switch to tone dialing.

Ex.

```
= 0 3 1 X X X X X X T
```

**5** Enter the numbers requested by the information service using ⓪ – ⑨ [numeric keys].

Ex.

```
= 0 3 1 X X X X X T 7 8 9 #
```

**6** If you want to receive faxes, press ⓘ [Start].

If you are using the external telephone, hang up the handset after pressing ⓘ [Start].

## Dialing an Overseas Number (With Pauses)

When you dial or register an overseas number, you may need to insert a pause within the number.

**1** Place documents.

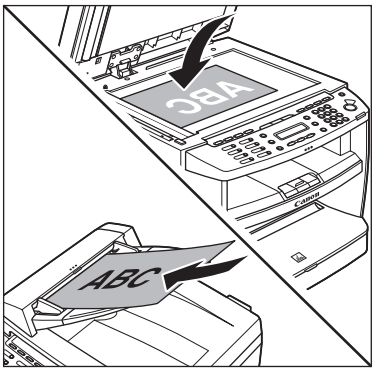


**2** Press [FAX] [FAX].

**3** Adjust any necessary scan settings for your documents.

For details, see "Adjusting Density," on p. 5-23, "Selecting Image Quality," on p. 5-24, and "2-Sided Document (MF4380dn Only)," on p. 5-25.

**4** Enter the international access code using ⓪ – ⑨ [numeric keys].

Ex.

```
= 0 1 2
```

For details on international access codes, contact your local telephone company.

**5** If necessary, press [Redial/Pause] to insert a pause.

Ex.

```
= 0 1 2 P
```

- The letter <P> is displayed between the numbers.
- <P> in the fax/telephone number represents 2.5-second pause.
- For a longer pause, press [Redial/Pause] again.

**6** Enter the country code, the area code, and the fax/telephone number of the recipient.

Ex.

```
= 0 1 2 P 2 3 X X X X X X
```

**7** Press [Redial/Pause] to enter a pause at the end of the number.

**8** Press ⓘ [Start].

When you place the documents on the platen glass, press [◄ −] or [+ ►] to select the document size, then press ⓘ [Start] for each document. When scanning is complete, press [OK] to start sending.

**NOTE**

If <CONFIRM FAX NO.> in <ACCESS TO DEST.> in <SYSTEM SETTINGS> is set to <ON> and you specify a fax number using ⓪ – ⑨, ⊞ [numeric keys] and ⊛ [Tone], you need to enter the fax number again for comfirmation, then press [OK].

## Basic Methods for Sending PC Faxes

This section describes the flow of sending PC faxes.
Make sure that the fax driver is installed.
For details on the fax driver settings, see "Fax," in the e-Manual.

**NOTE**

Sending documents from a computer and scanning documents over the network cannot be processed at the same time. If this happens, these documents are handled differently depending on the following:

- If you send PC documents when the machine is scanning documents, the machine scans documents first, then starts sending the PC documents when scanning is complete.
- If you scan documents when the machine is sending PC documents, scanning is canceled. Wait for the PC documents to be sent out, then perform the scanning operation again.

**1** Open the document you want to fax from the application.

**2** Select [Print] from the [File] menu.

**NOTE**

The procedure for displaying the [Print] dialog box may differ depending on the application you are using.

**3** Select your fax from [Name], then click [Properties].

**NOTE**

- The fax name displayed in the fax driver screen is changed by settings in the [Printers] folder (or [Printers and Faxes]). (See "Fax," in the e-Manual.)
- The procedure for displaying the fax driver screen may differ depending on the applications you are using.

**4** Configure the required settings in the fax driver screen, then click [OK].

**5** Click [OK].

**6** Specify recipient name and fax number in the [Sending Settings] sheet, click [Add to Recipient List].

**NOTE**

- The number of recipients to which you can send simultaneously depends on the conditions of cover sheet attachment. For more information, click [Help] in the bottom righthand corner of the fax driver window to view the online help.
- You can select a recipient from the address book by clicking [Address Book]. (See "Fax," in the e-Manual.)
- You cannot access or edit the address book if you do not have access permission (default: Power Users or higher) to the destination folder of the address book. If this is the case, log on as user having access permission to the folder, or click [Specify a Folder] in the [Edit Address Book] sheet, and change the destination folder of the address book to a folder, such as the [My Documents] folder, that you have write permission for. For details about how to change the destination folder of the address book, see "Fax," in the e-Manual.

**7** If you want to attach a cover sheet, select [Cover Sheet] sheet, specify a format for the cover sheet.

See "Fax," in the e-Manual for cover sheet attachment.

**8** Click [OK].

# Canceling Sending Fax Documents

**Follow this procedure to cancel a transmission in progress.**

**NOTE**

You can also cancel a transmission from the Status Monitor screen. (See "Checking/Deleting Fax Transmission Documents," on p. 5-45.)

**1** Press [Stop/Reset] during transmission.

**2** When the <CANCEL DURING TX/RX?> message appears, press [◄ ━] to select <YES>.

```
CANCEL DURING TX/RX?
 < YES          NO >
```

**NOTE**

- For sending jobs, remove any unscanned documents from the ADF.
- If you are in the copy or scan standby mode and want to cancel a fax job, press [FAX] [FAX] to return to the fax mode first.

# Specifying Destinations

**This section describes how to specify a fax destination. You can select a destination stored in a one-touch key or coded dial codes, or specify a new destination.**

## Specifying a New Fax Number

You can specify a new fax number using ⓪ – ⑨, # [numeric keys] and ⊛ [Tone].

**1** Place documents.

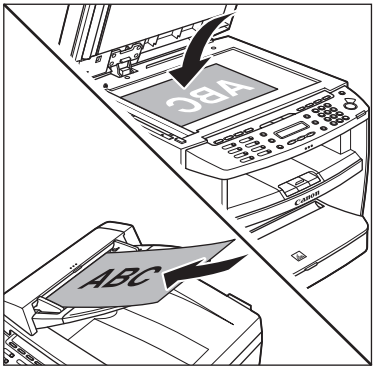


**2** Press [FAX] [FAX].

**3** Adjust any necessary scan settings for your documents.

For details, see "Adjusting Density," on p. 5-23, "Selecting Image Quality," on p. 5-24, and "2-Sided Document (MF4380dn Only)," on p. 5-25.

**4** Enter the fax number with ⓪ – ⑨ [numeric keys].

Ex.

```
= 0 3 1 X X X X X X
```

If you enter a wrong number when specifying a fax number, press [Stop/Reset].

**5** Press [Start].

When you place the documents on the platen glass, press [◄–] or [+►] to select the document size, then press [Start] for each document. When scanning is complete, press [OK] to start sending.

**NOTE**

If <CONFIRM FAX NO.> in <ACCESS TO DEST.> in <SYSTEM SETTINGS> is set to <ON> and you specify a fax number using ⓪ – ⑨, # [numeric keys] and ⊛ [Tone], you need to enter the fax number again for comfirmation, then press [OK].

## Using the One-Touch Keys

You can specify up to eight destinations using one-touch Keys.

**NOTE**

To use this feature, you need to first register destinations in one-touch Keys. (See "Registering One-Touch Keys," on p. 3-3.)

**1** Place documents.

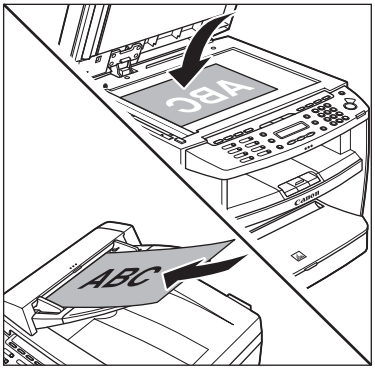


**2** Press [FAX] [FAX].

**3** Adjust any necessary scan settings for your documents.

For details, see "Adjusting Density," on p. 5-23, "Selecting Image Quality," on p. 5-24, and "2-Sided Document (MF4380dn Only)," on p. 5-25.

**4** Press the desired one-touch key (01 to 08).

Ex.

```
2 = 0 3 1 X X X X X X
 [ 0 1 ] c a n o n
```

If you pressed a wrong key, press [Stop/Reset], then try again from step 3.

**5** Press [Start].

When you place the documents on the platen glass, press [◄−] or [+►] to select the document size, then press [Start] for each document. When scanning is complete, press [OK] to start sending.

## Using Coded Dial Codes

You can specify up to 100 destinations using coded dial codes.

**NOTE**

To use this feature, you need to first register destinations in coded dial code. (See "Registering Coded Dial Codes," on p. 3-6.)

**1** Place documents.

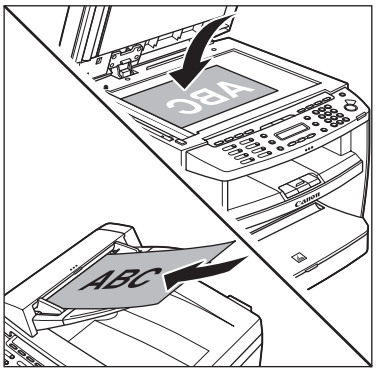


**2** Press [FAX] [FAX].

**3** Adjust any necessary scan settings for your documents.

For details, see "Adjusting Density," on p. 5-23, "Selecting Image Quality," on p. 5-24, and "2-Sided Document (MF4380dn Only)," on p. 5-25.

**4** Press [Coded Dial] .

**5** Enter the desired two-digit code (00 to 99) with ⓪ – ⑨ [numeric keys].

Ex.

```
= 0 3 1 X X X X X X
[ 0 2 ] s a l e s
```

If you entered a wrong code, press [Stop/Reset], then try again from step 3.

**6** Press [Start].

When you place the documents on the platen glass, press [◄–] or [+►] to select the document size, then press [Start] for each document. When scanning is complete, press [OK] to start sending.

## Using the Group Addresses

Group Dialing enables you to specify a group of registered destinations in one-touch keys. This is useful if you want to send the same document to several destinations. You can register up to 50 destinations in one group.

**NOTE**

To use this feature, you need to register destinations in a group address beforehand. (See "Registering Group Addresses," on p. 3-9.)

**1** Place your documents.

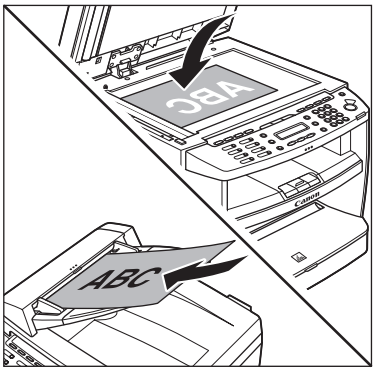


**2** Press [FAX] [FAX].

**3** Adjust any necessary scan settings for your documents.

For details, see "Adjusting Density," on p. 5-23, "Selecting Image Quality," on p. 5-24, and "2-Sided Document (MF4380dn Only)," on p. 5-25.

**4** Press the one-touch key under which the desired group dialing is registered.

Ex.

```
= 0 3 1 X X X X X X
[ 0 2 ] s a l e s
```

If you pressed a wrong key, press [Stop/Reset], then try again from step 3.

**5** Press [Start].

When you place the documents on the platen glass, press [◄–] or [+►] to select the document size, then press [Start] for each document. When scanning is complete, press [OK] to start sending.

## Using the Address Book Key

[Address Book] search enables you to search for a recipient registered in the machine. This is useful when you forget which one-touch key or coded dial code the recipient you want is registered under.

**NOTE**

To use this feature, you need to register destinations in Address Book beforehand. (See "Registering Destinations in the Address Book," on p. 3-1.)

**1** Place documents.

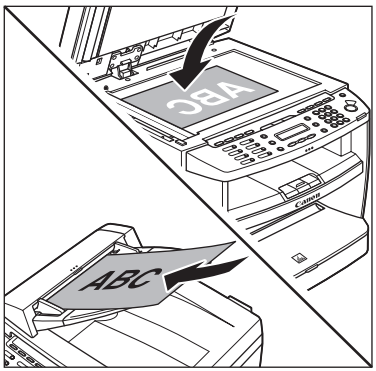

**2** Press [FAX] [FAX].

**3** Adjust any necessary scan settings for your documents.

For details, see "Adjusting Density," on p. 5-23, "Selecting Image Quality," on p. 5-24, and "2-Sided Document (MF4380dn Only)," on p. 5-25.

**4** Press [Address Book] repeatedly to select <NAME SEARCH> or <ADD/TEL SEARCH>, then press [OK].

```
NAME  SEARCH
```

– <NAME SEARCH>: Searches a destination by name.
– <ADD/TEL SEARCH>: Searches a destination by fax number.

**NOTE**

If no recipient is registered in the Address Book, <NOT REGISTERED> is displayed.

**5** Enter the first letter of the recipient's name or the first part of the fax number with ⓪ – ⑨ and # [numeric keys].

– For example, if you want to search for a name that starts with the letter "C", press ② (ABC). Entries starting with the letter you entered are displayed if any entries are registered.
– When you select <NAME SEARCH> in step 4, you can switch the input mode by pressing ⊛ [Tone].

[:A]: Letter mode
[:1]: Number mode

Ex.

```
NAME  SEARCH          [A]
canon
```

**6** Press [◄−] or [+►] to search for the recipient.

Ex.

```
NAME  SEARCH          [A]
DDD
```

– [+►]: Displays recipients in alphabetical order.
– [◄−]: Displays recipients in reverse order.

**7** When the desired recipient is displayed, press [OK].

Ex.

```
= 0 3 1 X X X X X X
[ 0 1 ] D D D
```

**8** Press ⊕ [Start].

When you place the documents on the platen glass, press [◄−] or [+►] to select the document size, then press ⊕ [Start] for each document. When scanning is complete, press [OK] to start sending.

## Sending Documents to More Than One Location (Broadcasting)

Broadcasting enables you to send the same document to multiple recipients.

**NOTE**

– Up to 124 destinations can be specified at the same time. (Out of the 124 destinations, 16 numbers can be specified with ⓪ – ⑨, # [numeric keys] and ⊛ [Tone].). If you specify a group, which is made up of several destinations, each destination is counted as a separate address.
– If you frequently send documents to multiple destinations, it is recommended that you store those destinations as a group.

**1** Place documents.

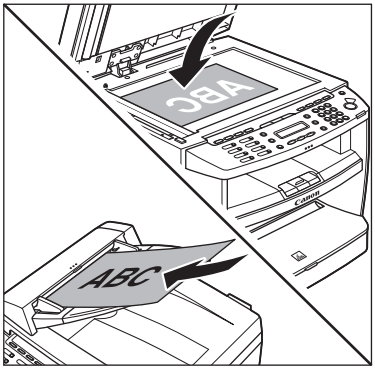


**2** Press ⊛ [Menu].

**3** Press [◄−] or [+►] to select <BROADCAST>, then press [OK].

```
MENU
3    BROADCAST
```

**4** Specify the destination.

```
NO.001=_
```

Use ⓪ – ⑨, # [numeric keys] and ⊛ [Tone], one-touch keys, coded dial codes, or ▭ [Address Book] to specify destinations.

**NOTE**

- You can enter up to 16 different fax numbers using ⓪ – ⑨, # [numeric keys] and ⊛ [Tone].
- Make sure to press [OK] after entering the recipient's number if you use ⓪ – ⑨ [numeric keys].

**5** Repeat step 4 to enter all required recipients.

**NOTE**

To check all the specified destinations, press [◄−] or [+►] to scroll the display.

**6** Press ⊙ [Start].

When you place the documents on the platen glass, press [◄−] or [+►] to select the document size, then press ⊙ [Start] for each document. When scanning is complete, press [OK] to start sending.

**NOTE**

If <CONFIRM FAX NO.> in <ACCESS TO DEST.> in <SYSTEM SETTINGS> is set to <ON> and you specify a fax number using ⓪ – ⑨, # [numeric keys] and ⊛ [Tone], you need to enter the fax number again for comfirmation, then press [OK].

# Adjusting Density

**You can adjust the density to the most appropriate level for the document you send.**

**1** Place documents.

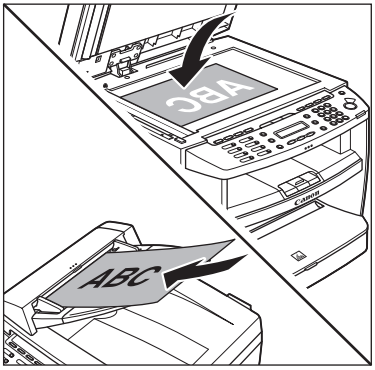


**2** Press [FAX] [FAX].

**3** Press [ ] [Density].

**4** Press [◄−] or [+►] to adjust the density, then press [OK].

```
DENSITY
-LT ◐□■□□□□□□□□◑  DK+
```

– [+►]: to make light documents darker.
– [◄−]: to make documents lighter.

**NOTE**

This setting returns to the default after all documents are scanned. If you want to keep the setting, see "Changing Standard Mode," on p. 5-29.

**5** Specify the destination and send your documents.

For details, see "Specifying Destinations," on p. 5-18.

# Selecting Image Quality

**You can adjust the image quality of the document you send. The higher image quality you set, the better the output will be, but the longer the transmission will take.**
**The default setting is <STANDARD>.**

**1** Place documents.

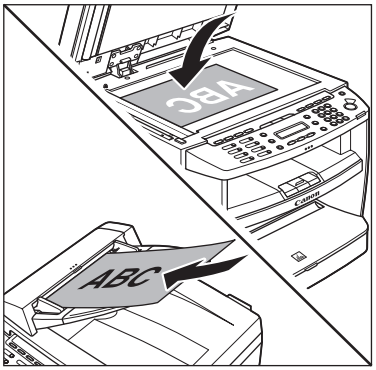


**2** Press [FAX] [FAX].

**3** Press [Image Quality] repeatedly to select the image quality, then press [OK].

```
IMAGE QUALITY
                    FINE
```

- <STANDARD>: for most text-only documents (200 × 100 dpi)
- <FINE>: for fine-print documents (the resolution is twice that of <STANDARD>) (200 × 200 dpi)
- <PHOTO>: for documents that contain photographs (the resolution is twice that of <STANDARD>) (200 × 200 dpi)
- <SUPER FINE>: for documents that contain fine print and images (the resolution is four times that of <STANDARD>) (200 × 400 dpi)

**NOTE**

This setting returns to the default after all documents are scanned. If you want to keep the setting, see "Changing Standard Mode," on p. 5-29.

**4** Specify the destination and send your documents.

For details, see "Specifying Destinations," on p. 5-18.

# 2-Sided Document (MF4380dn Only)

**You can set the machine to automatically turn over 2-sided documents that are placed in the ADF, and scan each side separately.**

**1** Place documents in the ADF.

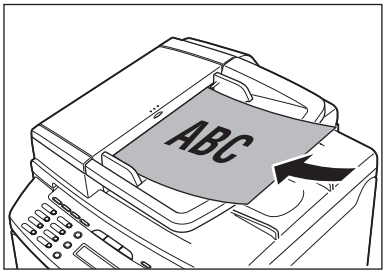


**2** Press [FAX] [FAX].

**3** Press ◯ [2-Sided] repeatedly to select the binding type, then press [OK].

```
2-SIDED BOOK
```

– <2-SIDED BOOK>: The front and back sides of the document have the same top-bottom orientation.
– <2-SIDED CALENDAR>: The front and back sides of the document have opposite top-bottom orientations.

**4** Specify the destination and send your documents.

For details, see "Specifying Destinations," on p. 5-18.

# Redialing When the Line Is Busy

**If the recipient's line is busy or if there is no answer, you can redial the same fax number manually or set the machine to redial automatically.**

## Redialing Manually

**1** Place documents.

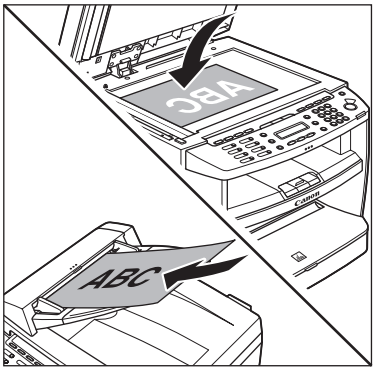


**2** Press [FAX] [FAX].

**3** Press [Redial/Pause] [Redial/Pause].

> **NOTE**
> When <RESTRICT REDIAL> is set to <ON> in the <ACCESS TO DEST.> of the <SYSTEM SETTINGS> menu, redialing is not available.

**4** Press [Start] [Start].

When you place the documents on the platen glass, press [Start] [Start] for each document. When scanning is complete, press [OK] to start sending.

## Redialing Automatically

Auto Redial enables the machine to automatically redial the recipient's fax number if the recipient cannot be reached due to a busy line, or if a sending error occurs. Auto Redial can be turned <ON> or <OFF>. If you set <AUTO REDIAL> to <ON>, you can set how many times the machine redials the number, and the redial interval.

The default settings are as follows:
- <AUTO REDIAL>: ON
- <REDIAL TIMES>: 2TIMES
- <REDIAL INTERVAL>: 2MIN.

**1** Press [Menu] [Menu].

**2** Press [◄−] or [+►] to select <FAX SETTINGS>, then press [OK].

```
MENU
5   FAX SETTINGS
```

**3** Press [◄−] or [+►] to select <TX SETTINGS>, then press [OK].

```
FAX SETTINGS
3   TX SETTINGS
```

**4** Press [◄−] or [+►] to select <AUTO REDIAL>, then press [OK].

```
TX SETTINGS
1  AUTO REDIAL
```

**5** Press [◄−] or [+►] to select <ON>, then press [OK].

```
AUTO REDIAL
                    ON
```

**6** Use [◄−] or [+►] or ⓪ – ⑨ [numeric keys] to enter the number of redials (1 to 10 times) the machine will make, then press [OK].

Ex.

```
REDIAL TIMES
                1TIMES
```

**NOTE**

Regardless of the number you entered, the machine makes only one redialing attempt if it does not detect a busy signal.

**7** Use [◄−] or [+►] or ⓪ – ⑨ [numeric keys] to enter the time (2 to 99 minutes, in one-minute increments) between redials, then press [OK].

Ex.

```
REDIAL INTERVAL
                35MIN.
```

**8** Press [Stop/Reset] to return to the standby mode.

# Checking the Dial Line before Sending

**The following redirection problem may happen with certain kinds of fax machines on the market made by companies other than Canon. The DIALING LINE CHCK mode prevents this rare occurrence from happening.**
**If you are sending a fax document from your machine at the same time another fax machine (made by a company other than Canon) is trying to send you a fax, your fax document may end up being redirected to that fax machine, instead of the original destination you had intended.**
**Setting <DIALING LINE CHCK> to <ON> enables you to avoid such sending problems.**
**The default setting is <OFF>.**

**NOTE**

The DIALING LINE CHCK mode is enabled only after you disconnect the power cord, then connect the cord again.



**1** Press [Menu].

**2** Press [◄−] or [+►] to select <FAX SETTINGS>, then press [OK].

```
MENU
5   FAX SETTINGS
```

**3** Press [◄−] or [+►] to select <TX SETTINGS>, then press [OK].

```
FAX SETTINGS
3   TX SETTINGS
```

**4** Press [◄−] or [+►] to select <DIALING LINE CHCK>, then press [OK].

```
TX SETTINGS
2   DIALING LINE CHCK
```

**5** Press [◄−] or [+►] to select <ON>, then press [OK].

```
DIALING LINE CHCK
                    ON
```

**6** Press [Stop/Reset] to return to the standby mode.

# Changing Standard Mode

**This mode enables you to specify the standard scan settings for density and image quality.**

**1** Press [Menu].

**2** Press [◄−] or [+►] to select <FAX SETTINGS>, then press [OK].

```
MENU
5   FAX SETTINGS
```

**3** Press [◄−] or [+►] to select <USER SETTINGS>, then press [OK].

```
FAX SETTINGS
2   USER SETTINGS
```

**4** Press [◄−] or [+►] to select <STANDARD SETTINGS>, then press [OK].

```
USER SETTINGS
5   STANDARD SETTINGS
```

**5** Press [◄−] or [+►] to select the desired setting item, then press [OK].

```
STANDARD SETTINGS
1   DENSITY
```

You can specify the following settings:

– <DENSITY>: Adjusts the density of documents. (See "Adjusting Density," on p. 5-23.)

– <IMAGE QUALITY>: Adjusts the image quality of documents. (See "Selecting Image Quality," on p. 5-24.)

**6** Press [Stop/Reset] to return to the standby mode.

# Send Start Speed

**This function enables you to change the send start speeds, which is useful when there is difficulty initiating the sending of a document.**
**The default setting is <33600bps>.**

**1** Press [Menu].

**2** Press [◄−] or [+►] to select <SYSTEM SETTINGS>, then press [OK].

```
MENU
11 SYSTEM SETTINGS
```

If the System Password has been set, enter the System Password using 0 – 9 [numeric keys], then press [OK].

**3** Press [◄−] or [+►] to select <COMMUNICATIONS>, then press [OK].

```
SYSTEM SETTINGS
4  COMMUNICATIONS
```

**4** Press [◄−] or [+►] to select <TX START SPEED>, then press [OK].

```
COMMUNICATIONS
1  TX START SPEED
```

**5** Press [◄−] or [+►] to select the desired start speed, then press [OK].

```
TX START SPEED
              33600bps
```

If your document transmission is slow in starting, this may mean that the telephone lines in your area are in poor condition. Select a slower speed. You can select <33600bps>, <14400bps>, <9600bps>, <7200bps>, <4800bps>, or <2400bps>.

**6** Press [Stop/Reset] to return to the standby mode.

# Printing Received Documents on Both Sides of Paper

**You can print received documents on both sides of the paper you select. This enables you to save paper.**
**The default setting is <OFF>.**

**NOTE**

You can print the received documents on both sides of the paper only when <PAPER SIZE> is set to <LTR> or <A4>. The received documents are printed on one side of the paper when <PAPER SIZE> is not set to <LTR> or <A4>. (See "Setting Paper Size and Type," on p. 2-14.)

**1** Press [Menu].

**2** Press [◄−] or [+►] to select <FAX SETTINGS>, then press [OK].

```
MENU
5   FAX SETTINGS
```

**3** Press [◄−] or [+►] to select <PRINTER SETTINGS>, then press [OK].

```
FAX SETTINGS
5   PRINTER SETTINGS
```

**4** Press [◄−] or [+►] to select <2-SIDED PRINT>, then press [OK].

```
PRINTER SETTINGS
2   2-SIDED PRINT
```

**5** Press [◄−] or [+►] to select <ON>, then press [OK].

```
2-SIDED PRINT
                    ON
```

**6** Press [Stop/Reset] to return to the standby mode.

# Reducing a Received Document

**You can set the machine to automatically reduce received documents so that the whole document is printed within the printable area of the paper.**
**The default setting is <ON>.**

**1** Press [Menu].

**2** Press [◄−] or [+►] to select <FAX SETTINGS>, then press [OK].

```
MENU
5   FAX SETTINGS
```

**3** Press [◄−] or [+►] to select <PRINTER SETTINGS>, then press [OK].

```
FAX SETTINGS
5   PRINTER SETTINGS
```

**4** Press [◄−] or [+►] to select <RX REDUCTION>, then press [OK].

```
PRINTER SETTINGS
1   RX REDUCTION
```

**5** Press [◄−] or [+►] to select the desired setting, then press [OK].

```
RX REDUCTION
                    ON
```

- <ON>: Reduces the documents automatically depending on the length of the documents.
- <OFF>: Prints documents on a paper without reducing the size.
- <CUT>: Cuts off the end of a document that does not fit on one page up to 24 mm. When the height of the area to be cut off is more than 24 mm, the document will be printed on the following page without being cut off.

**6** Press [Stop/Reset] to return to the standby mode.

# Printing Footer Information on a Received Document

**You can set whether to insert the machine's fax number and the sender information on received faxes.**
**The default setting is <OFF>.**

**1** Press [Menu].

**2** Press [◄−] or [+►] to select <FAX SETTINGS>, then press [OK].

```
MENU
5   FAX SETTINGS
```

**3** Press [◄−] or [+►] to select <RX SETTINGS>, then press [OK].

```
FAX SETTINGS
4   RX SETTINGS
```

**4** Press [◄−] or [+►] to select <RX TERMINAL ID>, then press [OK].

```
RX SETTINGS
4   RX TERMINAL ID
```

**5** Press [◄−] or [+►] to select <ON>, then press [OK].

```
RX TERMINAL ID
                    ON
```

**6** Press [Stop/Reset] to return to the standby mode.

# Specifying the Way of Printing When Toner Runs Out

**This function enables you to continue printing received fax documents or reports when the toner has run out.**
**The default setting is <OFF>.**

**NOTE**

When <CONT. PRINTING> is set to <ON>, the printed documents may be light or blurred because of lack of toner. The data is erased when the documents are printed out, so you cannot print the same documents again.

**1** Press [Menu].

**2** Press [◄−] or [+►] to select <FAX SETTINGS>, then press [OK].

```
MENU
5   FAX SETTINGS
```

**3** Press [◄−] or [+►] to select <PRINTER SETTINGS>, then press [OK].

```
FAX SETTINGS
5   PRINTER SETTINGS
```

**4** Press [◄−] or [+►] to select <CONT. PRINTING>, then press [OK].

```
PRINTER SETTINGS
3   CONT. PRINTING
```

**5** Press [◄−] or [+►] to select <ON>, then press [OK].

```
CONT. PRINTING
                    ON
```

**6** Press [Stop/Reset] to return to the standby mode.

# Setting the Incoming Ring

**This function enables you to activate the ring alert of the external telephone if <RX MODE> is set to <FaxOnly>. Selecting <ON> enables you to distinguish between the fax reception and answer voice calls when you pick up the external telephone while it is ringing.**
**The default setting is <ON>.**

**1** Press [Menu].

**2** Press [◄−] or [+►] to select <FAX SETTINGS>, then press [OK].

```
MENU
5   FAX SETTINGS
```

**3** Press [◄−] or [+►] to select <RX SETTINGS>, then press [OK].

```
FAX SETTINGS
4   RX SETTINGS
```

**4** Press [◄−] or [+►] to select <INCOMING RING>, then press [OK].

```
RX SETTINGS
1   INCOMING RING
```

**5** Press [◄−] or [+►] to select <ON>, then press [OK].

```
INCOMING RING
                    ON
```

**6** Press [◄−] or [+►] to set the number of ring times, then press [OK].

```
RING COUNT
                2TIMES
```

**7** Press [Stop/Reset] to return to the standby mode.

# Receiving Documents Manually with an External Telephone (Remote RX)

**You can connect one external telephone to the machine.**
**When the telephone rings with the machine in the MANUAL receive mode, you can use the external telephone to start receiving the document without walking over to the machine.**

**The default settings are as follows:**

- **<REMOTE RX>: ON**
- **<REMOTE RX ID>: 25**

## Activating the Remote Reception

Follow this procedure to turn on the remote reception.

**1** Press [Menu].

**2** Press [◄−] or [+►] to select <FAX SETTINGS>, then press [OK].

```
MENU
5   FAX SETTINGS
```

**3** Press [◄−] or [+►] to select <RX SETTINGS>, then press [OK].

```
FAX SETTINGS
4   RX SETTINGS
```

**4** Press [◄−] or [+►] to select <REMOTE RX>, then press [OK].

```
RX SETTINGS
2   REMOTE RX
```

**5** Press [◄−] or [+►] to select <ON>, then press [OK].

```
REMOTE RX
                    ON
```

**6** Use 0 – 9 [numeric keys] to enter a remote reception ID (a combination of two characters using 0 to 9), then press [OK].

```
REMOTE RX ID
                    25
```

**NOTE**

The default ID is 25. If you do not want to change the ID, press [OK] without entering any numbers.

**7** Press [Stop/Reset] to return to the standby mode.

## Receiving Documents with the Remote Reception

Follow this procedure to receive fax documents using the remote reception.

**NOTE**

Before using the remote reception to receive fax documents, make sure the followings:
- An external telephone is connected properly.
- Your telephone is set to tone dialing.

**1** When you receive a call, pick up the external telephone.

**2** When you hear a beep, use ⓪ – ⑨ [numeric keys] to enter the two-digit remote reception ID to start reception.

If you hear someone on the line, you can start talking to the other party.

**3** When the reception is complete, hang up the telephone.

# Selecting the Receive Mode for Printing

**You can select whether the machine stores all received pages in the memory before printing them out or prints each page as it is received.**
**The default setting is <MEMORY RX>.**

**1** Press [Menu].

**2** Press [◄−] or [+►] to select <FAX SETTINGS>, then press [OK].

```
MENU
5   FAX SETTINGS
```

**3** Press [◄−] or [+►] to select <RX SETTINGS>, then press [OK].

```
FAX SETTINGS
4   RX SETTINGS
```

**4** Press [◄−] or [+►] to select <RX PRINT>, then press [OK].

```
RX SETTINGS
3   RX PRINT
```

**5** Press [◄−] or [+►] to select the desired printing method, then press [OK].

```
RX PRINT
              MEMORY RX
```

– <MEMORY RX>: Prints after all the pages of the document are received.
– <PRINT RX>: Prints each page as it is received.

**6** Press [Stop/Reset] to return to the standby mode.

# Rejecting Incoming Faxes from the Unidentified Senders

**This function enables you to reject incoming faxes from senders who do not transmit their fax numbers (telephone numbers) to your machine. This can be useful when you do not want to receive direct mail (DM).**
**The default setting is <OFF>.**

**1** Press [Menu].

**2** Press [◄−] or [+►] to select <FAX SETTINGS>, then press [OK].

```
MENU
5   FAX SETTINGS
```

**3** Press [◄−] or [+►] to select <RX SETTINGS>, then press [OK].

```
FAX SETTINGS
4   RX SETTINGS
```

**4** Press [◄−] or [+►] to select <RX RESTRICTION>, then press [OK].

```
RX SETTINGS
5   RX RESTRICTION
```

**5** Press [◄−] or [+►] to select <ON>, then press [OK].

```
RX RESTRICTION
                    ON
```

**6** Press [Stop/Reset] to return to the standby mode.

# Receive Start Speed

**This function enables you to change the receive start speeds, which is useful when there is difficulty initiating the receiving of a document.**
**The default setting is <33600bps>.**

**1** Press [Menu].

**2** Press [◄−] or [+►] to select <SYSTEM SETTINGS>, then press [OK].

```
MENU
11  SYSTEM  SETTINGS
```

If the System Password has been set, enter the System Password using 0 – 9 [numeric keys], then press [OK].

**3** Press [◄−] or [+►] to select <COMMUNICATIONS>, then press [OK].

```
SYSTEM  SETTINGS
4   COMMUNICATIONS
```

**4** Press [◄−] or [+►] to select <RX START SPEED>, then press [OK].

```
COMMUNICATIONS
2   RX  START  SPEED
```

**5** Press [◄−] or [+►] to select the desired receive speed, then press [OK].

```
RX  START  SPEED
                33600bps
```

If your document reception is slow in starting, this may mean that the telephone lines in your area are in poor condition. Select a slower speed. You can select <33600bps>, <14400bps>, <9600bps>, <7200bps>, <4800bps>, or <2400bps>.

**6** Press [Stop/Reset] to return to the standby mode.

# Receiving Documents in Memory without Printing Out (Memory Lock Reception)

**Normally a document prints as soon as you receive it. However, there may be occasions when you want the machine to store all documents in memory until you are ready to print them. Locking the machine to receive and store all documents in memory is called memory lock reception.**
**The default setting is <OFF>.**

**1** Press ⊛ [Menu].

**2** Press [◄−] or [+►] to select <SYSTEM SETTINGS>, then press [OK].

```
MENU
11 SYSTEM SETTINGS
```

If the System Password has been set, enter the System Password using ⓪ – ⑨ [numeric keys], then press [OK].

**3** Press [◄−] or [+►] to select <COMMUNICATIONS>, then press [OK].

```
SYSTEM SETTINGS
4  COMMUNICATIONS
```

**4** Press [◄−] or [+►] to select <MEMORY LOCK>, then press [OK].

```
COMMUNICATIONS
3  MEMORY LOCK
```

If the memory lock password has been set, enter the password using ⓪ – ⑨ [numeric keys], then press [OK].

**5** Press [◄−] or [+►] to select <ON>, then press [OK].

```
MEMORY LOCK
                    ON
```

**NOTE**

When you select <OFF>, the machine starts to print the received documents in memory.

**6** Press [◄−] or [+►] to select <PASSWORD>, then press [OK].

```
MEMORY LOCK
1  PASSWORD
```

**7** If you want to set or change a password for the Memory Lock mode, use ⓪ – ⑨ [numeric keys] to enter the memory reception password (up to seven digits), then press [OK].

Ex.

```
PASSWORD
12__
```

- If you set a password, it will be necessary to enter the password whenever you want to change the Memory Lock mode settings, or cancel the Memory Lock mode.
- If you do not want to set the Memory Lock with a password, press [OK] without entering any numbers.

**8** Press [◄ −] or [+ ►] to select <MEMORY RX TIME>, then press [OK].

```
MEMORY LOCK
2   MEMORY RX TIME
```

If you do not need to set the timer for memory lock, skip to step 12.

**9** Press [◄ −] or [+ ►] to select <ON>, then press [OK].

```
MEMORY RX TIME
                    ON
```

**10** Use ⓪ – ⑨ [numeric keys] to enter the start time (in 24-hour format), then press [OK].

Ex.

```
MEM. RX START TIME
                 20:00
```

**11** Use ⓪ – ⑨ [numeric keys] to enter the end time (in 24-hour format), then press [OK].

Ex.

```
MEM. RX END TIME
                 08:00
```

**12** Press [Stop/Reset] to return to the standby mode.

# Printing All Documents Stored in the Memory Lock Reception Mode

**1** Press [Menu].

**2** Press [◄−] or [+►] to select <SYSTEM SETTINGS>, then press [OK].

```
MENU
11  SYSTEM  SETTINGS
```

If the System Password has been set, enter the System Password using 0 – 9 [numeric keys], then press [OK].

**3** Press [◄−] or [+►] to select <COMMUNICATIONS>, then press [OK].

```
SYSTEM  SETTINGS
4   COMMUNICATIONS
```

**4** Press [◄−] or [+►] to select <MEMORY LOCK>, then press [OK].

```
COMMUNICATIONS
3   MEMORY  LOCK
```

If the memory lock password has been set, enter the password using 0 – 9 [numeric keys], then press [OK].

**5** Press [◄−] or [+►] to select <OFF>, then press [OK].

```
MEMORY  LOCK
                    OFF
```

The received documents are printed.

**6** Press [Stop/Reset] to return to the standby mode.

# Forwarding Received Fax Documents in Memory

**You can redirect the fax documents received in memory to the specified destination.**

**1** Press ◯ [Job Cancel/Status Monitor] repeatedly to select <TX/RX STATUS>, then press [OK].

```
TX/RX  STATUS
```

**2** Press [◄−] or [+►] to select the job you want to transfer, then press [OK].

```
001  RX
123XXXXXX
```

**3** Press [◄−] or [+►] to select <FORWARD>, then press [OK].

```
001
FORWARD
```

**4** Press the desired one-touch key or ( ) [Coded Dial] followed by the two-digit code to select the destination, then press ⊕ [Start].

**NOTE**

To be able to select a forwarding destination, it is necessary to register destinations in the Address Book beforehand. (See "Registering Destinations in the Address Book," on p. 3-1.)

# Checking/Changing the Status of Fax Documents in Memory

**The Status Monitor screen enables you to view and change the status of fax documents in memory.**

## Checking/Deleting Fax Transmission Documents

You can check the detailed information of fax documents currently being sent or waiting to be sent, then delete unwanted documents as necessary.

**1** Press ◯ [Job Cancel/Status Monitor] repeatedly to select <TX/RX STATUS> or <JOB CANCEL>, then press [OK].

```
TX/RX  STATUS
```

If you select <JOB CANCEL>, press [◄−] or [+►] to select <TX/RX>, then press [OK].

**2** Press [◄−] or [+►] to scroll trough the job list.

```
001  MEMORY  TX
TECOIMAGE
```

If you want to delete a job, go to the next step. Otherwise, press [Stop/Reset] to return to the standby mode.

**3** Press [◄−] or [+►] to select the job you want to delete, then press [OK].

```
003  MEMORY  TX
TECO
```

**NOTE**

For <BROADCAST>, all recipients entered for a broadcasting job will be canceled.

**4** Press [◄−] or [+►] to select <CANCEL>, then press [OK].

```
003
CANCEL
```

If you select <JOB CANCEL> in step 1, you do not need to perform this procedure. Go to the next step.

**5** Press [◄−] to select <YES>.

```
CANCEL?
 <  YES              NO  >
```

If you do not want to cancel the job, press [+►] to select <NO>.

**6** Press [Stop/Reset] to return to the standby mode.

## Checking/Deleting Fax Reception Documents

You can delete the received documents in memory. You can also forward received documents in memory to a desired destination.

**1** Press ◯ [Job Cancel/Status Monitor] repeatedly to select <TX/RX STATUS> or <JOB CANCEL>, then press [OK].

```
TX/RX STATUS
```

If you select <JOB CANCEL>, press [◄−] or [+►] to select <TX/RX>, then press [OK].

**2** Press [◄−] or [+►] to scroll trough the job list.

```
001 MEMORY TX
031XXXXXXX
```

If you want to delete a job, go to the next step. Otherwise, press [Stop/Reset] to return to the standby mode.

**3** Press [◄−] or [+►] to select the job you want to delete, then press [OK].

Ex.

```
001 RX
123
```

**4** Press [◄−] or [+►] to select <CANCEL>, then press [OK].

```
001
CANCEL
```

If you select <JOB CANCEL> in step 1, you do not need to perform this procedure. Go to the next step.

**NOTE**

You can forward the selected job to another destination by selecting <FORWARD>. For information on forwarding received documents, see "Forwarding Received Fax Documents in Memory," on p. 5-44.

**5** Press [◄−] to select <YES>.

```
CANCEL?
 < YES          NO >
```

If you do not want to cancel the job, press [+►] to select <NO>.

**6** Press [Stop/Reset] to return to the standby mode.

## Checking the Fax Log

You can view the results of fax transactions that list all faxes sent or received.

**1** Press ◯ [Job Cancel/Status Monitor] repeatedly to select <TX/RX LOG>, then press [OK].

```
TX/RX LOG
```

**2** Press [◄−] or [+►] to view the required transmission/reception result.

Ex.

```
60 (07/31 14:04) TX
123XXXXXXX      -OK
```

**3** Press [Stop/Reset] to return to the standby mode.

# Printing

Chapter 6

This chapter describes the basic print features.

Overview of the Print Functions.....6-2
Introduction to Using Print Functions .....6-4
Printing Documents from a Computer.....6-5
Scaling Documents.....6-7
Printing Multiple Pages on One Sheet.....6-9
2-Sided Printing.....6-10
Checking and Canceling Print Jobs.....6-11

# Overview of the Print Functions

**2-sided printouts, collated printouts and enlarged/reduced printouts are available.**

## Printing from a computer (Network connection/USB connection)

e-Manual
• Refer to "Print"

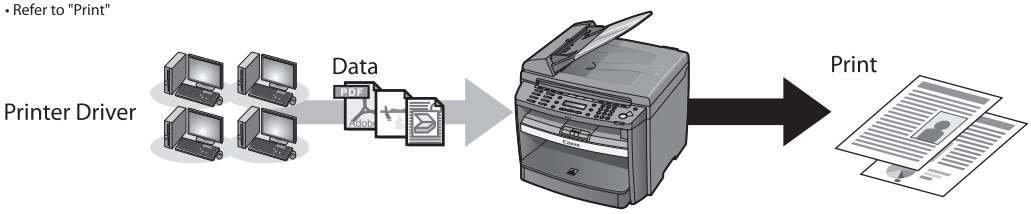


## Various printing features (Printing from a computer)

### Scaling documents (p. 6-7)

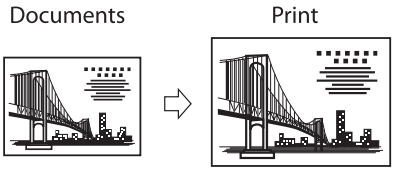


### 2-sided printing (p. 6-10)

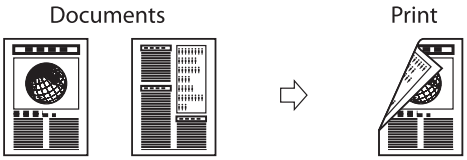

# Various printing features (Printing from a computer)

## Multiple pages onto one sheet (p. 6-9)

2 on 1

Documents

Print

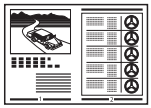

4 on 1

Documents

Print

## Poster printing

e-Manual
• Refer to "Print."

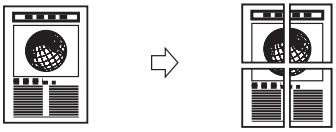

## Booklet printing

e-Manual
• Refer to "Print."

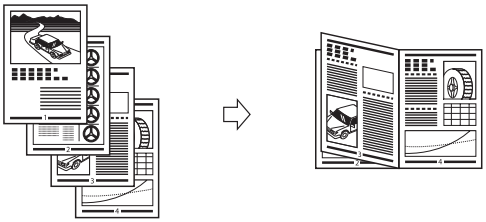

**NOTE**

Functions such as the 2 on 1, 2-sided printing, and collating can be used in combination.

# Introduction to Using Print Functions

**Make sure that the printer driver is installed.**

**For installing the driver to send a print job to the machine over a network, see "Network Connection ((MF4380dn/MF4370dn Only)" in the Starter Guide, or "Network Connection (MF4380dn/MF4370dn Only)" in the e-Manual.**
**For installing the driver to send a print job directly from your computer to the machine, see "USB Connection" in the Starter Guide, or "USB Connection" in the e-Manual.**

## Printer Driver

Using the printer driver, the various data processing tasks conventionally executed within the printer are appropriately divided between the host computer and the printer to greatly reduce the overall printing time. The workload can be delegated to match the output data, thus realizing a significant increase in speed through optimization.
You can update your printer driver software and acquire information about Canon products on the Canon home page (http://www.usa.canon.com). Driver software is updated every few months.

## XPS

The Canon XPS Printer Driver enables you to print documents in Windows Vista from applications that use the XPS format, utilizing the features and characteristics of the XPS format to the maximum extent.
"When using the Canon XPS Printer Driver, make the setting from the machine as follows:
[Menu] → <SYSTEM SETTINGS> → <PDL SELECT(PnP)> → <UFRII(XPS)>
To enable the setting, turn OFF the main power switch and then turn ON.
How to use the Canon XPS Printer Driver, see the Readme file and Help."

**NOTE**

- The Canon XPS Printer Driver supports Windows Vista only. If you select <UFRII(XPS)> with other operating systems, the machine cannot detect your computer.
- You cannot install the Canon XPS Printer Driver with the installer in the TCP/IP environment. How to install the Canon XPS Printer Driver, see the Readme file.
- When using the Canon XPS Printer Driver, it is recommended to use Windows Vista Service Pack 1 for increasing the printing speed.

**NOTE**

The available printer drivers may vary, depending on the machine and the version of Windows that you are using.

# Printing Documents from a Computer

**This section is the explanation of the basic procedure for printing from a computer (printer driver). Make sure that the printer driver is installed on your computer. To check if the driver is installed, see "Set Up Computers and Software" in the Starter Guide, or "Set Up Computers and Software" in the e-Manual. For details on the printer driver settings, see Online Help.**

**NOTE**

- Printing methods may differ depending on the applications you are using. For details, see the instruction manuals provided with the application software.
- The display may differ according to the operating system or the model of the machine.

**1** Open the document you want to print from the application.

**2** Select [Print] from the [File] menu.

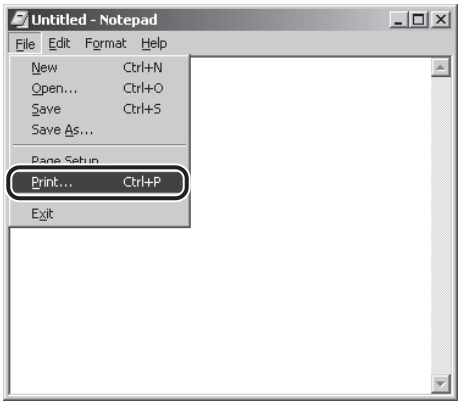


The [Print] dialog box is displayed.

**3** Select your printer from [Select Printer], then click [Page Setup].

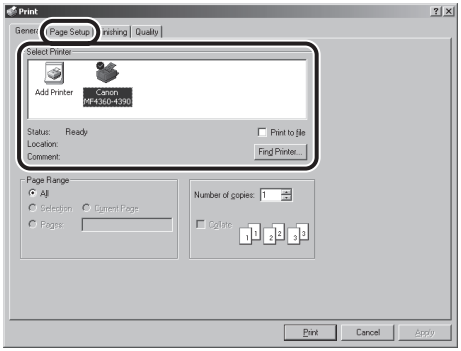


The printer driver screen is displayed.

**4** Configure the required settings in the printer driver screen.

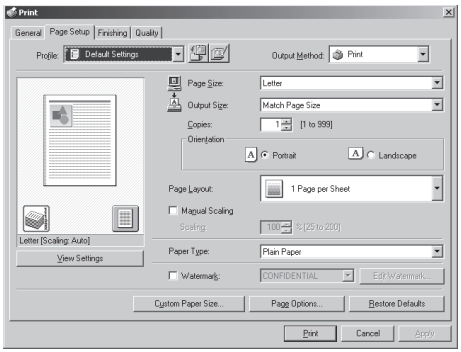

## 5 Click [Print].

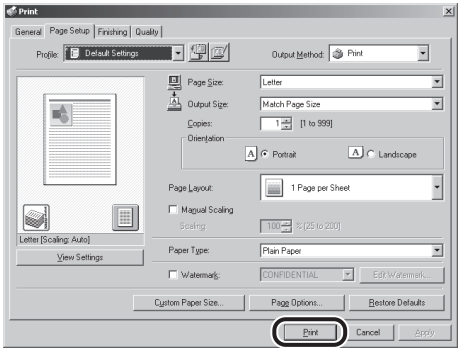


Printing begins.
If you want to cancel printing, see "Checking and Canceling Print Jobs," on p. 6-11.

# Scaling Documents

**You can enlarge or reduce documents to match the output paper size, such as reducing a document created in LTR size to print on STMT, or enlarging a document created in STMT size to print on LTR.**
**There are two methods for scaling a document: select the output size of the document to scale it automatically, or specify the scaling value manually.**

**NOTE**

- Depending on the selected page size and printer model you are using, you may not be able to magnify the document.
- Depending on the printer model you are using, you may not be able to magnify the document to the optimum ratio for the selected page size.
- If you are using an application that enables you to enlarge or reduce the document, configure the settings in the application.
- The display may differ according to the operating system or the model of the machine.

**1** Display the [Page Setup] sheet.

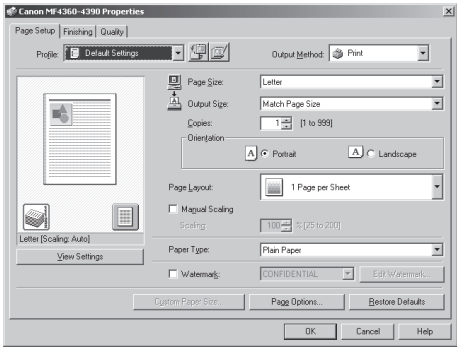


See "Printing Documents from a Computer" on p. 6-5 on how to display the printer driver screen.

**2** Select the page size of the document you created in the application from [Page Size].

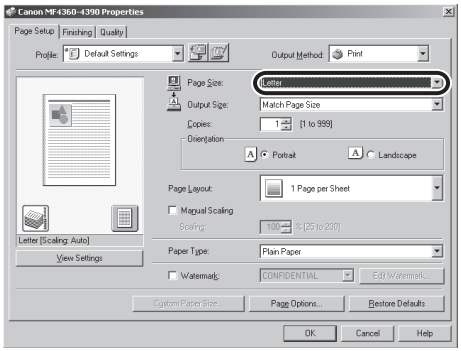

**3** Select the output size of the document from [Output Size].

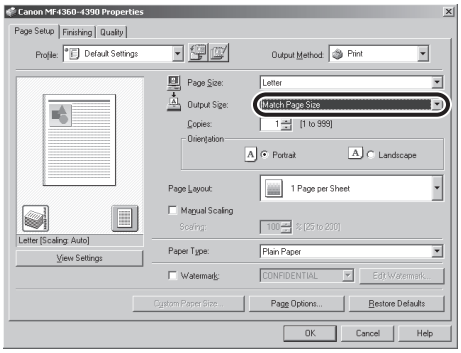


The document is scaled automatically according to the settings made in [Page Size] and [Output Size].

**4** If you want to increase or decrease the magnification manually, select [Manual Scaling] → specify the scaling ratio for [Scaling].

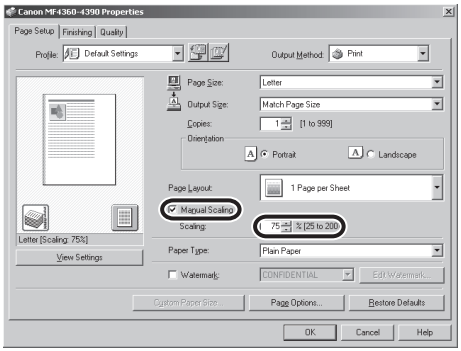


**NOTE**

If the ratio is less than 25% or more than 200%, the document is printed without scaling on the paper specified in [Output Size].

**5** On the [Print] dialog box, click [Print] or [OK].

# Printing Multiple Pages on One Sheet

**This mode enables you to reduce multiple pages to fit onto one sheet of paper. You can make well-organized documents by editing multiple materials onto one sheet. And you can cut down print costs by saving papers, and it is also useful for saving space.**

**NOTE**

- Although there may be a function for printing multiple copies depending on the application you are using, do not use it together with this function. If you do, printing may not be executed correctly.
- You cannot enlarge and reduce manually when using this function.
- The display may differ according to the operating system or the model of the machine.

**1** Display the [Page Setup] sheet.

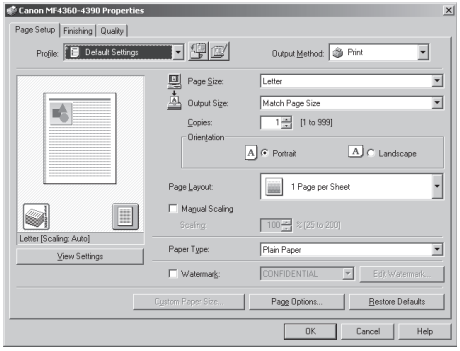


See "Printing Documents from a Computer" on p. 6-5 on how to display the printer driver screen.

**2** Select the page layout from [Page Layout].

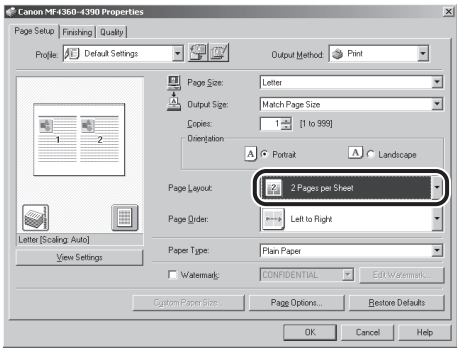


**3** Select the page order from [Page Order].

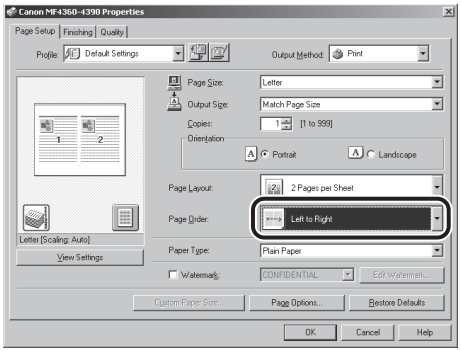


**4** On the [Print] dialog box, click [Print] or [OK].

**NOTE**

- Other than [2 Pages per Sheet], you can also select [4 Pages per Sheet], [6 Pages per Sheet], [8 Pages per Sheet], [9 Pages per Sheet], or [16 Pages per Sheet]. If you select [Poster [2 x 2]], [Poster [3 x 3]], or [Poster [4 x 4]], you can print out a poster that consists of multiple sheets of paper.
- When reducing multiple pages to fit on a sheet, you can also select the page order from the [Page Order] pull-down menu.

# 2-Sided Printing

**2-sided printing enables you to make 2-sided printouts. You can cut down print costs by half when copying in large quantities.**

**NOTE**

The display may differ according to the operating system or the model of the machine.

**1** Open the document you want to print from the application.

**2** Select [Print] from the [File] menu.

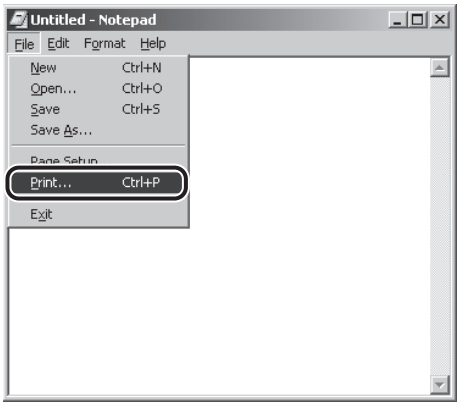


**3** Select your printer from [Select Printer], then click [Finishing] to open the dialog box.

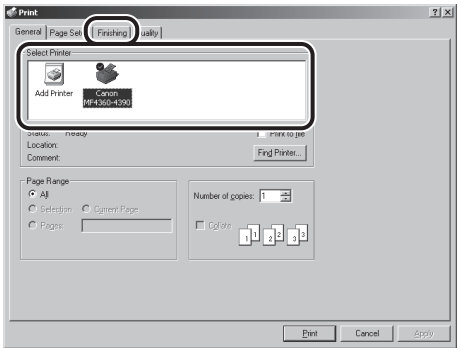


**4** Select [2-sided Printing] from [Print Style].

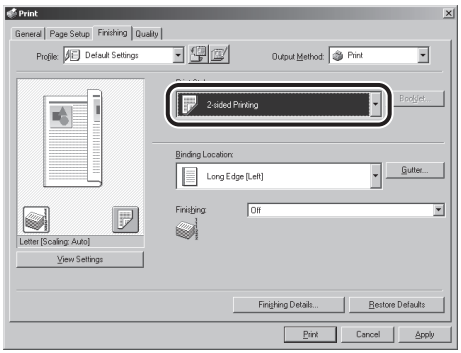


**5** Select binding edge for the paper printout from [Binding Location].

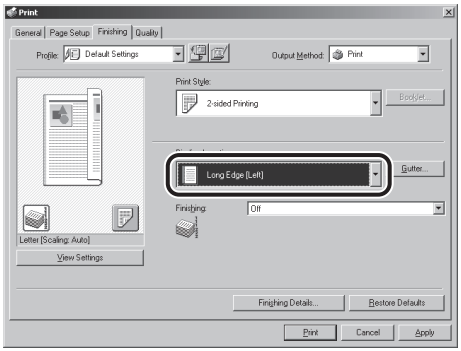


**6** On the [Print] dialog box, click [Print] or [OK].

# Checking and Canceling Print Jobs

**You can check the status of print jobs and cancel a job before the printing starts.**

**NOTE**

Make sure that the Processing/Data indicator is on or blinking. When the Processing/Data indicator is off, there are no jobs in the memory of the print job status.

**1** Press ○ [Job Cancel/Status Monitor] repeatedly to select <PRINT STATUS> or <JOB CANCEL>, then press [OK].

```
PRINT  STATUS
```

If you select <JOB CANCEL>, press [◄−] or [+►] to select <PRINT>, then press [OK].

**2** Press [◄−] or [+►] to scroll through the job list, and check the status of the print jobs.

Ex.

```
0001  18:30
File  -  TXT
```

If you want to cancel the job, go to the next step. Otherwise, press [Stop/Reset] to return to the standby mode.

**3** Press [◄−] or [+►] to select the job you want to cancel, then press [OK].

Ex.

```
0002  18:45
File  2  -  Note
```

**4** Press [◄−] or [+►] to select <CANCEL>, then press [OK].

```
0002
CANCEL
```

If you select <JOB CANCEL> in step 1, you do not need to perform this procedure. Go to the next step.

**5** Press [◄−] to select <YES>.

If you do not want to cancel the job, press [+►] to select <NO>.

```
CANCEL  PRINTING?
 <  YES          NO  >
```

**6** Press [Stop/Reset] to return to the standby mode.

# Scanning

Chapter 7

**This chapter describes how to use scanner functions.**

**Overview of Scanner Functions.....7-2**
**Introduction to Using Scanner Functions.....7-3**
For Scanning Documents to a Computer Connected with USB Cable .....7-3
For Scanning Documents from a Networked Computer (MF4380dn/MF4370dn Only) .....7-3
**Basic Scanning Operations .....7-4**
Scanning Documents to a Computer Connected with USB Cable .....7-4
Scanning Documents from a Networked Computer (MF4380dn/MF4370dn Only) .....7-4
Canceling Scan Jobs to a Computer Connected with USB Cable .....7-5

# Overview of Scanner Functions

**You can retrieve documents scanned with this machine to your computer connected with a USB cable. You can also scan documents over the network.**

* MF4350d is not supported for scanning documents over the network.

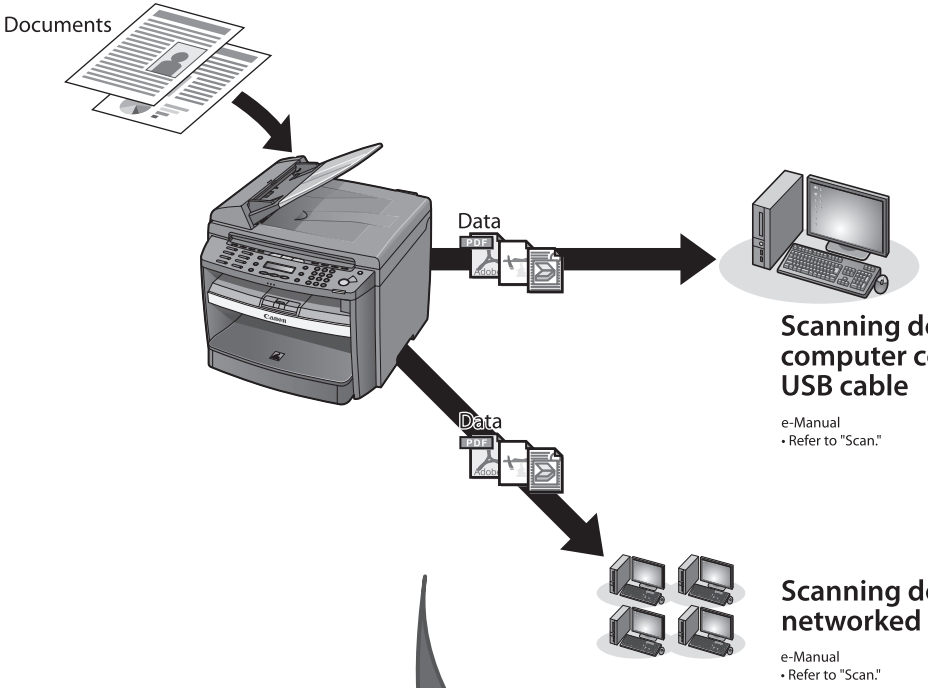


## Scanning documents to your computer connected with the USB cable

e-Manual
• Refer to "Scan."

## Scanning documents from a networked computer

e-Manual
• Refer to "Scan."

## Color Network ScanGear

**Use the Color Network ScanGear to scan from a networked computer. Settings for the Color Network ScanGear are as follows:**

**Basic Settings**
- Color Mode
- Resolution
- Original Size

**Image Processing Settings**
- Density
- Option
-- negative/positive Reverse
-- Mirror Image
-- Rotate Image
-- Brightness
-- Contrast
-- Gamma

# Introduction to Using Scanner Functions

**This section describes the things that you must do before using scanner functions.**
**Make sure to set the following items first:**

## For Scanning Documents to a Computer Connected with USB Cable

● USB scanner driver

Install the USB scanner driver for scanning via USB. (See "Set Up Computers and Software," in the Starter Guide or "Setting Up the Machine," in the e-Manual.)

## For Scanning Documents from a Networked Computer (MF4380dn/ MF4370dn Only)

● Network settings

Set the network settings to enable your machine to communicate over the network. (See "Network Settings (MF4380dn/MF4370dn Only)," in the e-Manual.)

● Color Network ScanGear

Install the Color Network ScanGear scanner driver for scanning over the network. (See "Set Up Computers and Software," in the Starter Guide or "Setting Up the Machine," in the e-Manual.)

# Basic Scanning Operations

**This section describes the basic procedures for scanning documents.**

## Scanning Documents to a Computer Connected with USB Cable

This section describes the basic procedure for using the operation panel of the machine to scan via USB. Scanned documents are transmitted via USB to your computer.

**NOTE**

- Your machine must be connected via USB and the USB scanner driver must be loaded to scan.
- For better scanning quality, we recommend that you place documents on the platen glass. If you use the ADF, the scanned image might not be clear.

**1** Place documents.

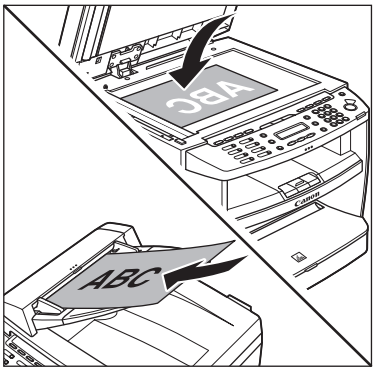


**2** Press [SCAN] [SCAN] repeatedly to select <USB SCANNING>.

For MF4350d, just press [SCAN] [SCAN] to display <SCANNING MODE>.

**3** Press [Start].

- If you are asked to select a program to launch, select "MF Toolbox Ver4.9." The scanned document will be processed according to your settings.
- When scanning is complete, a folder with the scanning date will be created in the [My Pictures] folder in the [My Documents] folder, and your document will be saved in this folder. (In Windows Vista/7, the folder will be created in the [Pictures] folder.)

## Scanning Documents from a Networked Computer (MF4380dn/ MF4370dn Only)

This section describes the basic procedure for using Color Network ScanGear to scan over the network. Scanned documents are transmitted over the network to your computer.

**NOTE**

- If you are using Color Network ScanGear for the first time after installing it, the network scanner to be used must be selected with the ScanGear Tool. For details, see "Scan," in the e-Manual.
- For better scanning quality, we recommend that you place documents on the platen glass. If you use the ADF, the scanned image might not be clear.
- Printing fax documents and scanning documents over the network cannot be processed at the same time. If this happens, these documents are handled differently depending on the following:
  - If you scan documents when the machine is receiving fax documents, or the machine receives fax documents when scanning documents, the machine scans documents first, then starts printing the fax documents when scanning is complete.
  - If you scan documents when the machine is printing received fax documents, scanning is canceled. Wait for the fax documents to be printed out, then perform the scanning operation again.

– Sending documents from a computer and scanning documents over the network cannot be processed at the same time. If this happens, these documents are handled differently depending on the following:
  - If you send PC documents when the machine is scanning documents, the machine scans documents first, then starts sending the PC documents when scanning is complete.
  - If you scan documents when the machine is sending PC documents, scanning is canceled. Wait for the PC documents to be sent out, then perform the scanning operation again.
– Printing documents from a computer and scanning documents over the network cannot be processed at the same time. If this happens, these documents are handled differently depending on the following:
  - If you print PC documents when the machine is scanning documents, an error may occur. In this case, the machine scans documents first, then starts printing the PC documents when scanning is complete.
  - If you scan documents when the machine is printing PC documents, scanning is canceled. Wait for the PC documents to be printed out, then perform the scanning operation again.

**1** Place documents.

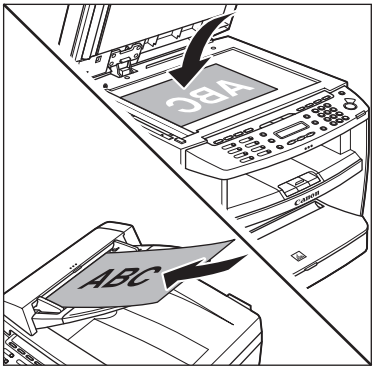


**2** Press [SCAN] [SCAN] repeatedly to select <NETWORK SCANNING>.

**3** Start Color Network ScanGear from the application on your computer.

For details, see "Scan," in the e-Manual.

**4** Make scan settings on the [Main], [Options], and [Scanner Info] sheets.

For details about the settings in each sheet, refer to the Online Help for that sheet.

**5** Click [Scan].

Color Network ScanGear Main Window closes and the scanned image is transferred to the application. During scanning, a scanning progress dialog box is displayed. To interrupt scanning, click [Cancel].

## Canceling Scan Jobs to a Computer Connected with USB Cable

Follow the procedure below to cancel an ongoing scan job via USB.

**1** Press [Stop/Reset].

**2** Click [OK] on the computer screen.

# Network (MF4380dn/ MF4370dn Only)

Chapter 8

**This chapter describes what the network is, what you can do with the network, and what you have to do to use the machine with the network.**


**Flowchart for Setting Up Network .....8-2**
**What is the Network? .....8-3**
**Overview of Network Functions.....8-4**

# Flowchart for Setting Up Network

**Follow the procedures in the flowchart below to set up each network function.**

## What to use

**To print, fax or scan over the network from your computer**

## Required settings

### Setting IP addresses

Starter Guide

- Refer to "Specify the IP Address Settings," in "Set Up Network Connection (MF4380dn/MF4370dn Only)."

e-Manual

- Refer to "Setting and Checking the IP Address," in "Network Settings."

### Install the driver using the network connection

Starter Guide

- Refer to "Network Connection(MF4380dn/MF4370dn Only)," in "Set Up Computers and Software."

e-Manual

- Refer to "Set Up Computers and Software," in "Setting Up the Machine."

# What is the Network?

**In the computer field, a network is a system of interconnected computers that communicate with each other. This machine uses LAN. LAN is the abbreviation for "Local Area Network" and means a network within a limited area (in an office, for example).**

## Sample network configuration for this product

### LAN

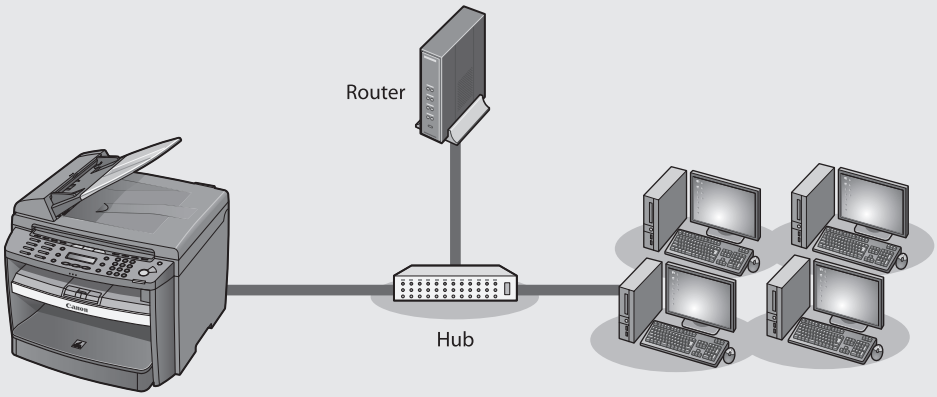


**Available functions:**

- Scanning documents from a networked computer
- Remote UI
- Networked printer
- Network PC fax

# Overview of Network Functions

**This section describes actions you can perform using the network function.**

## Network Scan

You can edit scanned images over the network.

e-Manual
• Refer to "Scan."

## Network PC Fax

You can transfer data from your computer to the machine and send them by fax from the machine.

e-Manual
• Refer to "Fax."

## Network Print

You can print over the network.

e-Manual
• Refer to "Print."

## Remote UI

You can register and make settings for this product's functions over the network from your computer.

e-Manual
• Refer to "Settings from a PC"

# Settings from a PC (MF4380dn/MF4370dn Only)

Chapter 9

**This chapter describes how to use Remote UI functions.**

**Overview of Remote UI .....9-2**
**Starting the Remote UI.....9-4**

# Overview of Remote UI

**The Remote UI enables you to check the machine's status and manage the machine's functions from a Computer on the network using a web browser. Using the computer keyboard, the management process, such as entering addresses to the address book will be easier.**

**Editing :**

- Machine settings
- Address book

**Confirming :**

- Device information
- Job information (log)

e-Manual

- Refer to "Settings from a PC."

By using Remote UI, you can set and confirm following functions.

## Checking Device Information from a Computer

**The Remote UI enables you to check the device information, such as device status, paper status, error information, device feature, network settings and counter information. Accessing to the device information from a distant place provides you with easy device management.**

**For details, see "Checking Device Status and Information" in the e-Manual.**

## Managing Jobs From a Computer

**The Remote UI enables you to manage print jobs being processed by the machine, or held in the print queue. It also enables you to view the print job log and the sending, storing and receiving results of fax jobs. Accessing to the print job information from a distant place provides you with easy job management.**

**For details, see "Job Management" in the e-Manual.**

## Editing the Address Book From a Computer

**The Remote UI enables you to make additions and changes to each item of the address book. You can use the keyboard of the computer, so entering large amount of addresses to the address book will be easier. You can also edit the One-touch Speed Dial, Coded Speed Dial.**

**For details, see "Managing the Address Book" in the e-Manual.**

## Setting/Registering From a Computer

**The Remote UI enables you to specify the machine's system settings, forwarding settings, the department ID and user ID, import and export function, and device custom settings. You can specify the various custom system settings more easily and speedy.**

**For details, see "Customizing System Settings" in the e-Manual.**

# Starting the Remote UI

**To start the Remote UI, follow the procedure described below.**

**NOTE**

Before you start the Remote UI, perform the following:

- Select <VIEW IP ADDRESS> in <NETWORK SETTINGS> located in the <SYSTEM SETTINGS>, and verify the IP address of the machine. If you do not know the IP address, consult with your network administrator. (See "Confirming IPv4 Address Settings and Checking IPv4 Connection," or "Confirming IPv6 Address Settings," in "Network Settings (MF4380dn/MF4370dn Only)," in the e-Manual.)
- Set <USE HTTP> to <ON> in <SYSTEM SETTINGS>. (See "Setting the Use of HTTP," in "Network Settings (MF4380dn/MF4370dn Only)," in the e-Manual.)

## 1 Prepare the Network.

Set up the machine for use in a network, then connect the machine and the computer to your network router or a hub.
For details, see "Set Up Network Connection (MF4380dn/MF4370dn Only)," in the Starter Guide, or "Set Up Network Connection (MF4380dn/MF4370dn Only)," in "Setting Up the Machine," in the e-Manual.

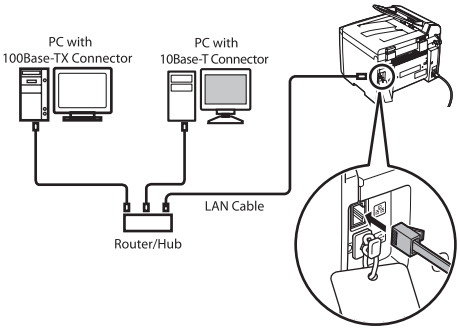


## 2 Start the web browser.

## 3 Enter the IP address of the machine in [Address] or [Location], then press [Enter] on the keyboard.

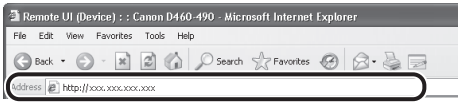


For details on how to check the IP address, see "Confirming IPv4 Address Settings and Checking IPv4 Connection," or "Confirming IPv6 Address Settings," in "Network Settings (MF4380dn/MF4370dn Only)," in the e-Manual.
The Remote UI screen appears.

**NOTE**

If you are using Safari, click [Choose File] instead of [Browse] to select the file of the Address Book data to import.

## 4 Enter the required data.

The required data differ depending on the authentication mode you are using.

■ For default settings:

① Select [Administrator Mode] or [End-User Mode].

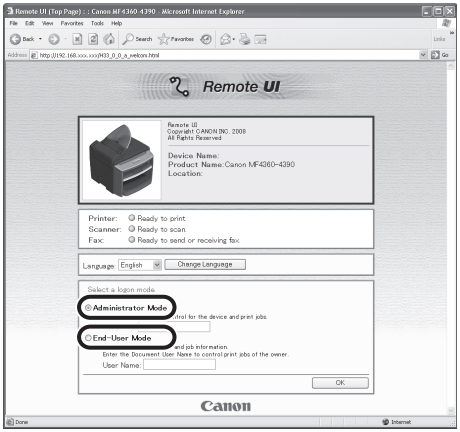


**NOTE**

If you want to change various settings, select [Administrator Mode]. Selecting [End-User Mode], you cannot change the settings.

② In case of End-User Mode, enter the User Name.

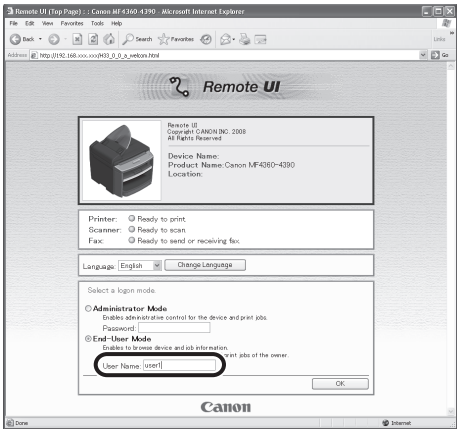


■ In case that system manager password is set:

① Select [Administrator Mode] or [End-User Mode].

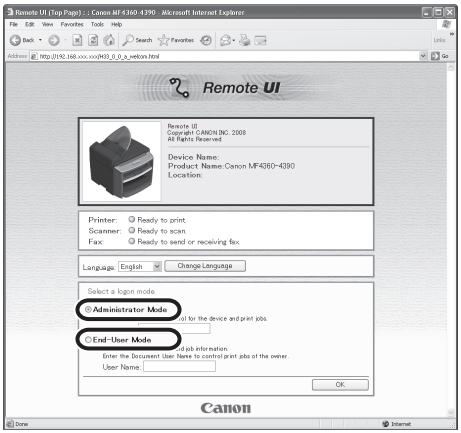


**NOTE**

If you want to change various settings, select [Administrator Mode]. Selecting [End-User Mode], you cannot change the settings.

② Enter the System Manager password or user name.

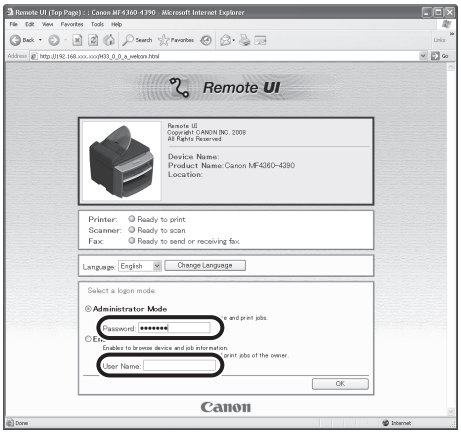


## 5 Click [OK].

## 6 Operate the Machine.

Now you can manage the machine on the web browser.
For details, see "Settings from a PC," in the e-Manual.

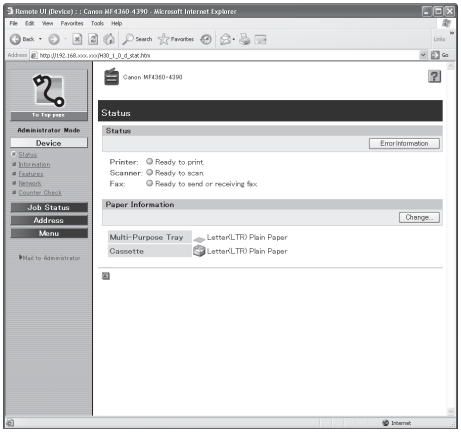

# Maintenance

Chapter 10

**This chapter describes how to perform routine cleaning operations, and replace toner cartridge.**


**Cleaning the Machine .....10-2**
Exterior .....10-2
Interior .....10-2
Fuser Roller.....10-5
Scanning Area.....10-6
**Replacing the Toner Cartridge.....10-9**
When a Message Appears .....10-9
Redistributing Toner.....10-10
Replacing the Toner Cartridge with a New One ..10-12
**Recycling Used Cartridges .....10-17**
The Clean Earth Campaign - The Canon Cartridge Return Program.....10-17
U.S.A. PROGRAM .....10-18
Canadian Program – Programme au Canada .....10-21
**Transporting the Machine .....10-23**
For MF4380dn/MF4370dn.....10-23
For MF4350d.....10-26

# Cleaning the Machine

**Note the following before cleaning your machine:**

- **Make sure no documents are stored in memory, then turn OFF the main power switch and disconnect the power cord.**
- **Use a soft cloth to avoid scratching the components.**
- **Do not use tissue paper, paper towels, or similar materials for cleaning; they can stick to the components or generate static charges.**

**CAUTION**

Never use volatile liquids such as thinners, benzene, acetone, or any other chemical cleaner to clean the machine. These can damage the machine components.

**NOTE**

When you turn OFF the main power switch, the data stored in memory will be retained for approximately 5 minutes. To check the jobs stored in memory, see the following:


- "Checking/Changing the Status of Fax Documents in Memory," on p. 5-45.
- "Checking and Canceling Print Jobs," on p. 6-11.


## Exterior

Clean the exterior of the machine.

1. Turn OFF the main power switch and disconnect the power cord.
2. Wipe the machine's exterior with a clean, soft, lint-free cloth dampened with water or diluted dishwashing detergent solution.
3. Wait for the machine to dry, then reconnect the power cord and turn ON the main power switch.

## Interior

Clean the machine's print area periodically to prevent toner powder and paper dust from accumulating inside.

1. Turn OFF the main power switch and disconnect the power cord.
2. Hold the front side of the operation panel with your hands.

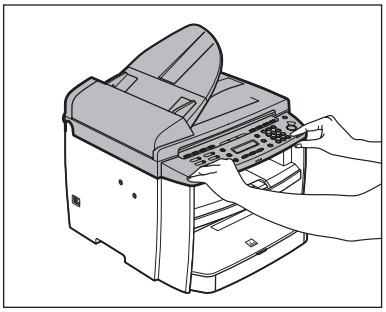

**3** Lift the scanning platform (A) until it is locked. (You will hear an audible "click.")

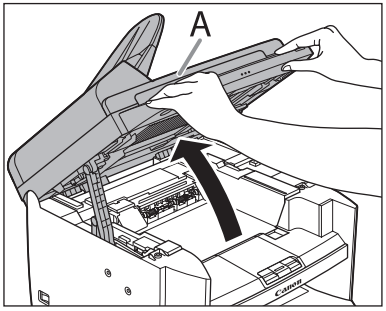


**4** Hold the grip (A) on the right front side of the toner cover.

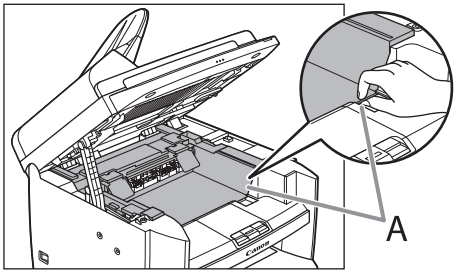


**5** Open the toner cover.

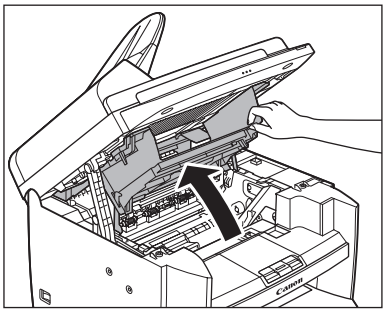

**6** Remove the toner cartridge.

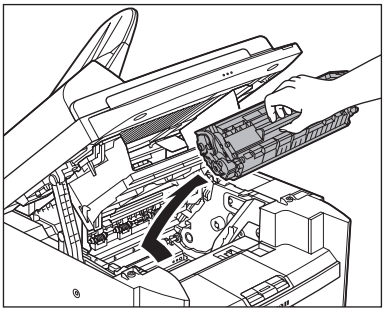

**CAUTION**

- Do not touch the rollers and parts which have labels "CAUTION! Hot surface avoid contact" on. They become very hot during use.
- To avoid exposing the toner cartridge to light, place it in its protective bag or wrap it in a thick cloth.
- Do not open the drum protective shutter (A) on the toner cartridge. Print quality may deteriorate if the drum surface is exposed to light or is damaged.

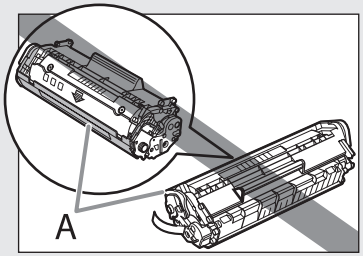


**NOTE**

Always hold the toner cartridge by its handle.

**7** Use a clean, soft, dry, lint-free cloth to remove any toner or paper debris from the machine's interior.

**NOTE**

- Do not touch the fixing assembly (A) as it becomes very hot during use.
- Do not touch the transfer roller (B) as this can damage the machine.

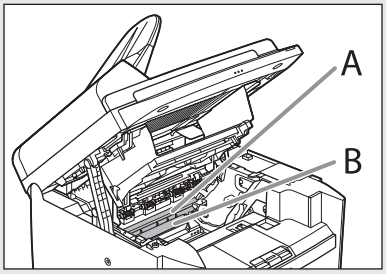


- If your hands or clothes get dirty from touching the toner, wash them immediately in cold water. Do not use hot water. If you do, the toner may be set permanently.

**8** Hold the toner cartridge by its handle (A).

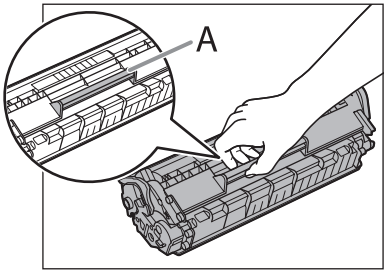


**9** Insert the toner cartridge so that the protrusion (A) on the right side of the toner cartridge fits into the guide (B) located on the right side of the machine and slide it down parallel to the guide.

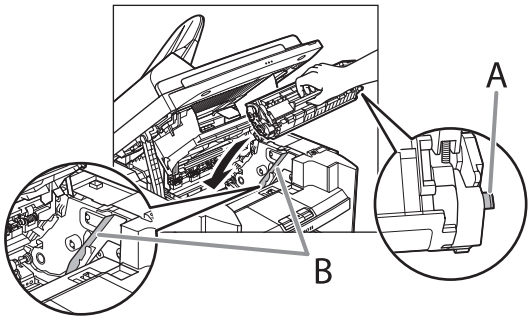


**10** Push the toner cartridge to make sure it is properly set in the machine.

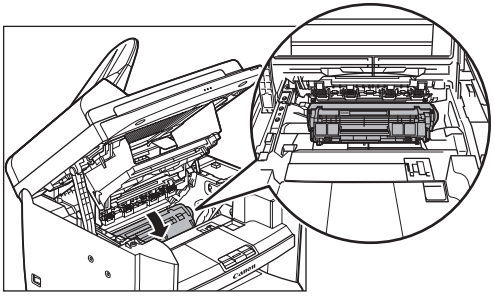

**11** Hold the grip (A) on the right front side of the toner cover.

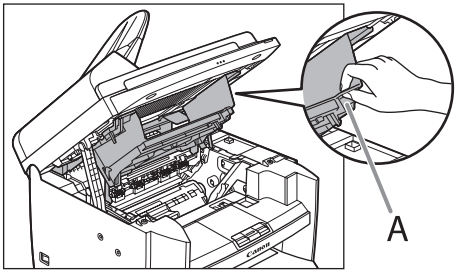

**12** Close the toner cover.

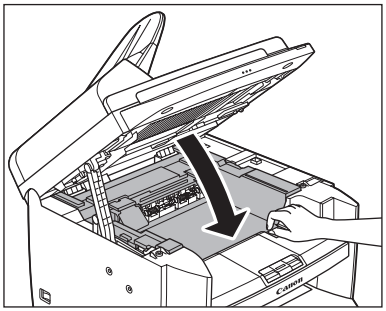

**13** Lower the scanning platform.

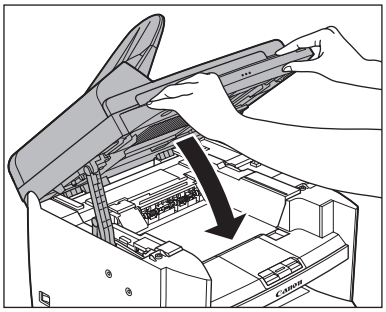

**NOTE**

- Be careful not to get your fingers caught.
- If you cannot close the toner cover, do not force it to close. Open the cover and make sure the toner cartridge is properly set in the machine.

**14** Reconnect the power cord and turn ON the main power switch.

## Fuser Roller

If black streaks appear with printing, the fuser roller in the main unit may be dirty. Should this occur, clean the fuser roller in the following procedure. The roller should also be cleaned each time the toner cartridge is replaced. Load a sheet of blank LTR paper into the multi-purpose tray and start cleaning.

**NOTE**

- Use standard paper as the cleaning paper.
- Cleaning the roller takes approximately 130 seconds.
- When some jobs are stored in memory, this function is not available.

**1** Press [Menu].

**2** Press [◄−] or [+►] to select <ADJUST./CLEANING>, then press [OK].

```
MENU
9   ADJUST./CLEANING
```

**3** Load a sheet of blank LTR paper in the multi-purpose tray.

■ For MF4380dn/MF4370dn

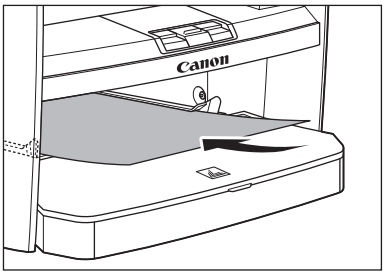

■ For MF4350d

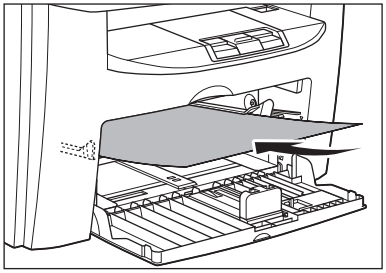

**4** Press [◄−] or [+►] to select <FIX. UNIT CLEANING>, then press [OK].

```
ADJUST./CLEANING
1   FIX.UNIT CLEANING
```

Cleaning starts.

**NOTE**

Throw away the cleaning paper after use.

## Scanning Area

Keep the scanning area clean to avoid dirty copies or faxes to be sent.

**CAUTION**

When cleaning the machine, first turn OFF the main power switch, and disconnect the power cord. Failure to observe these steps may result in a fire or electrical shock.

### Platen Glass

Clean the platen glass and the underside of the ADF by following the procedure below.

**1** Turn OFF the main power switch and disconnect the power cord.

**2** Open the ADF.

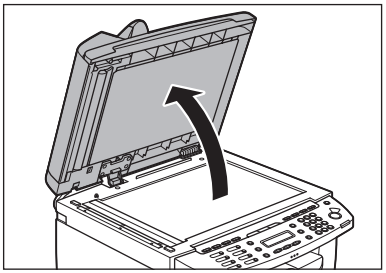

**3** Clean the platen glass and the underside of the ADF with a cloth dampened with water. Then, wipe the area with a soft, dry cloth.

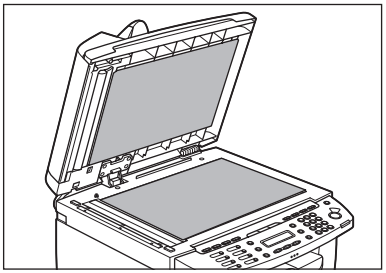

**CAUTION**

Do not dampen the cloth too much, as this may tear the document or damage the machine.

**4** Close the ADF.

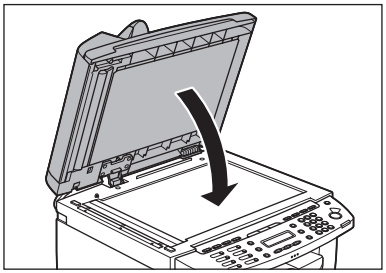

**CAUTION**
Be careful not to get your fingers caught.

## ADF (For MF4380dn)

If your documents have black streaks or appear dirty after copying them using the ADF, this may be caused by pencil lead rubbing off the documents and onto the roller. Clean the ADF scanning area and roller.

**1** Turn OFF the main power switch and disconnect the power cord.

**2** Open the ADF cover.

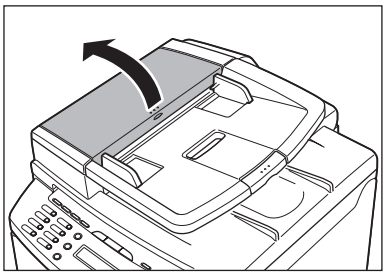

**3** Clean the rollers (A) inside the ADF with a cloth dampened with water. Then wipe the area with a soft, dry cloth.

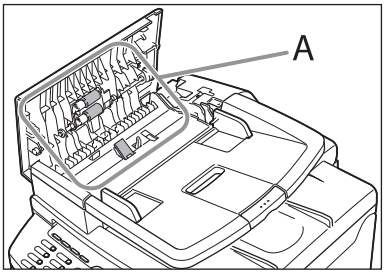


**CAUTION**
Do not dampen the cloth too much, as this may tear the document or damage the machine.

**4** Close the ADF cover.

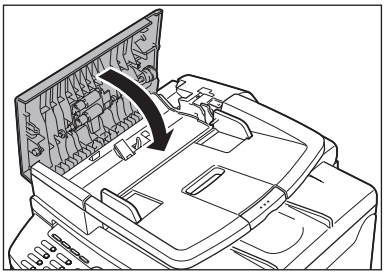

**CAUTION**
Be careful not to get your fingers caught.

**5** Reconnect the power cord and turn ON the main power switch.

## ADF (For MF4370dn/MF4350d)

If your documents have black streaks or appear dirty after copying them using the ADF, this may be caused by pencil lead rubbing off the documents and onto the roller. Clean the ADF scanning area and roller.

**1** Turn OFF the main power switch and disconnect the power cord.

**2** Open the ADF cover.

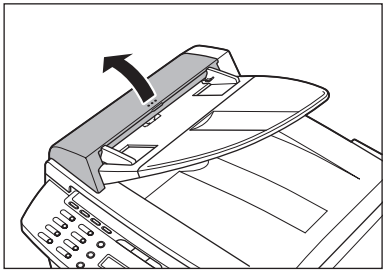

**3** Clean the rollers (A) inside the ADF with a cloth dampened with water. Then wipe the area with a soft, dry cloth.

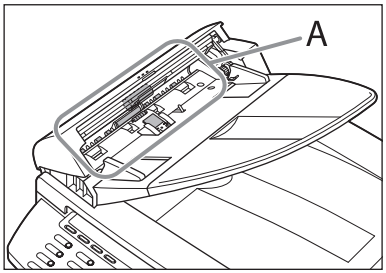


**CAUTION**

Do not dampen the cloth too much, as this may tear the document or damage the machine.

**4** Close the ADF cover.

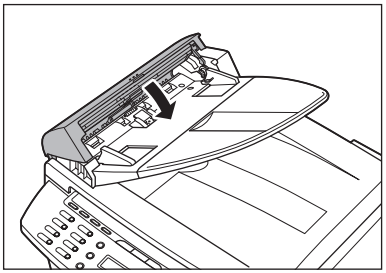

**CAUTION**

Be careful not to get your fingers caught.

**5** Reconnect the power cord and turn ON the main power switch.

# Replacing the Toner Cartridge

**This section describes how to replace or handle the toner cartridges and precautions on storing them.**

## When a Message Appears

Toner cartridges are consumable products. If the toner is running low or out during printing, a message appears in the display.

| Message | When it is Displayed | Contents and Remedies |
|---|---|---|
| TONER LOW<br>PREPARE NEW TONER | The toner is running low. | – Distribute toner in the toner cartridge. (See "Redistributing Toner," on p. 10-10.)<br>– It is recommended that you replace the toner cartridge before printing a large amount of data. (See "Replacing the Toner Cartridge with a New One," on p. 10-12.) |
| OUT OF TONER<br>CHANGE TONER | The toner is running out. | – Distribute toner in the toner cartridge.<br>– If the message persists, replace the toner cartridge. (See "Replacing the Toner Cartridge with a New One," on p. 10-12.) |

## Redistributing Toner

When the toner is running low, the message <TONER LOW/PREPARE NEW TONER> appears on the display, redistribute toner in the toner cartridge. We recommend that you prepare a new toner cartridge for future replacement with ease.

**CAUTION**

Do not touch the rollers and parts which have labels "CAUTION! Hot surface avoid contact" on. They become very hot during use.

**NOTE**

When <CONT. PRINTING> is set to <ON>, the printed documents may be light or blurred because of lack of toner. The data is erased when the documents are printed out, so you can not print the same documents again. (See "FAX SETTINGS," on p. 12-5.)

**1** Hold the front side of the operation panel with your hands.

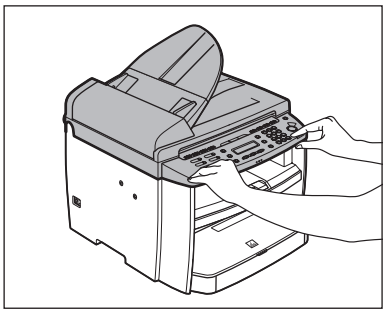

**2** Lift the scanning platform (A) until it is locked. (You will hear an audible "click.")

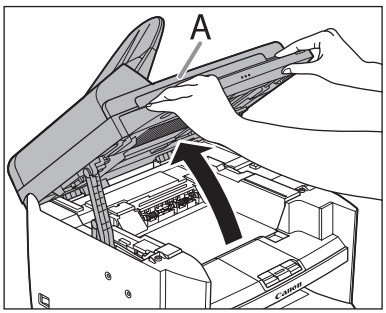


**3** Hold the grip (A) on the right front side of the toner cover.

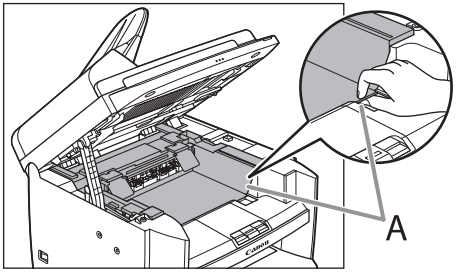


**4** Open the toner cover.

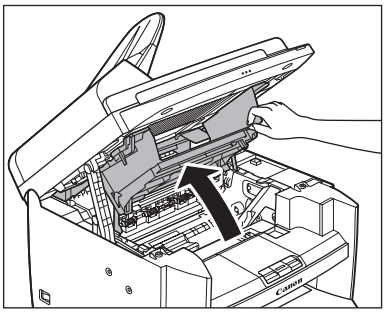

**5** Remove the toner cartridge.

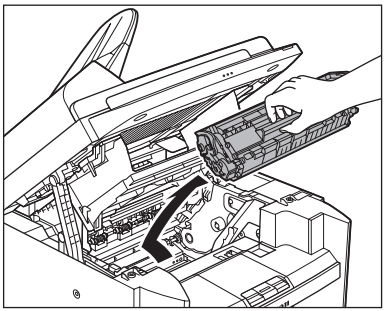

**CAUTION**

Do not touch the rollers and parts which have labels "CAUTION! Hot surface avoid contact" on. They become very hot during use.

**6** Gently rock the toner cartridge several times to evenly distribute toner inside.

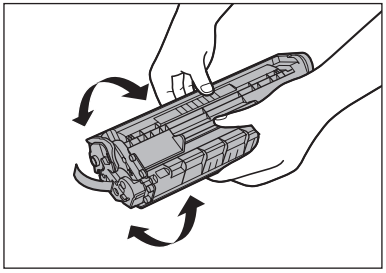

**7** Hold the toner cartridge by its handle (A).

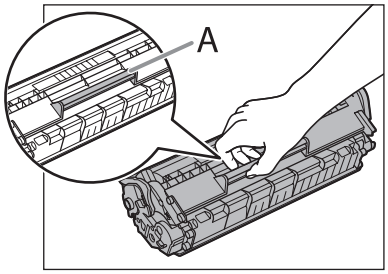


**CAUTION**

Do not open the drum protective shutter (A) on the toner cartridge. Print quality may deteriorate if the drum surface is exposed to light or is damaged.

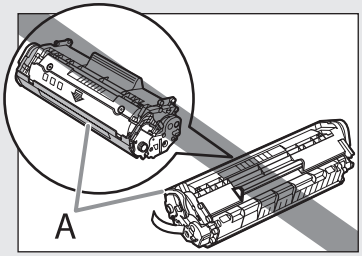


**NOTE**

Always hold the toner cartridge by its handle.

**8** Insert the toner cartridge so that the protrusion (A) on the right side of the toner cartridge fits into the guide (B) located on the right side of the machine and slide it down parallel to the guide.

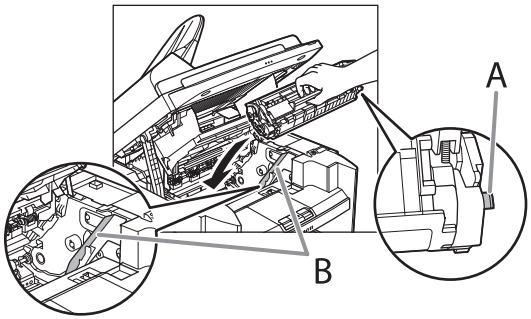


**9** Push the toner cartridge to make sure it is properly set in the machine.

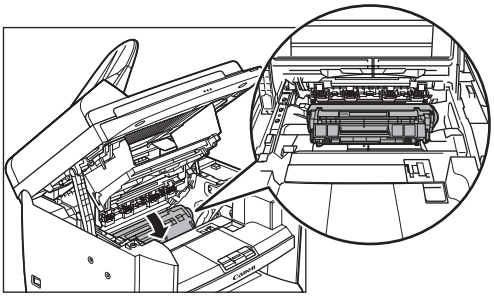

**10** Hold the grip (A) on the right front side of the toner cover.

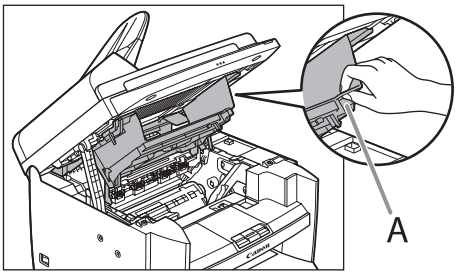

**11** Close the toner cover.

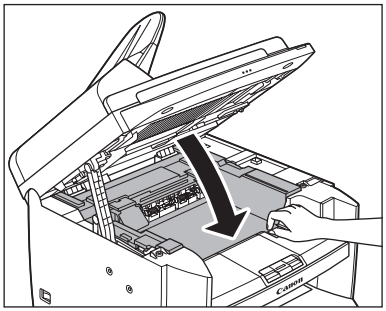

**12** Lower the scanning platform.

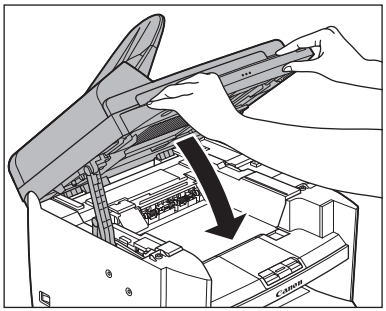

**CAUTION**

- Be careful not to get your fingers caught.
- If you cannot close the toner cover, do not force it to close. Open the cover and make sure the toner cartridge is properly set in the machine.

## Replacing the Toner Cartridge with a New One

When the message <OUT OF TONER /CHANGE TONER> appears, replace the toner cartridge with a new one.

When toner empty error occurs while receiving fax, printing fax is interrupted and the received data will be stored in the memory. If you set <CONT. PRINTING> to <ON>, you can keep printing fax documents or reports without replacing the toner cartridge. (See "FAX SETTINGS," on p. 12-5.)

**CAUTION**

Do not touch the rollers and parts which have labels "CAUTION! Hot surface avoid contact" on. They become very hot during use.

**NOTE**

- When <CONT. PRINTING> is set to <ON>, the printed documents may be light or blurred because of lack of toner. The data is erased when the documents are printed out, so you can not print the same documents again. (See "FAX SETTINGS," on p. 12-5.)
- If the toner gauge indicates that the toner is empty, replace the toner cartridge. (See "Checking the Toner Level," on p. 1-12.)

**1** Hold the front side of the operation panel with your hands.

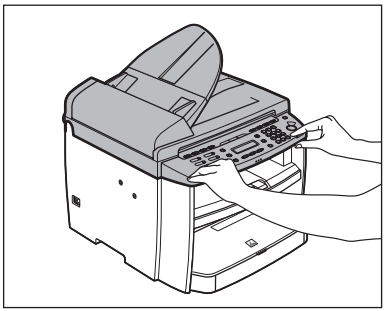

**2** Lift the scanning platform (A) until it is locked. (You will hear an audible "click.")

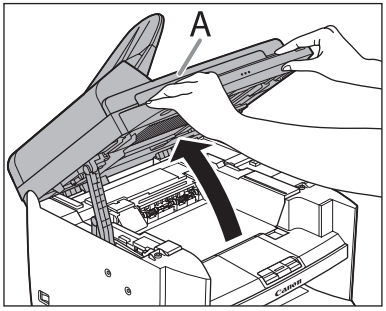


**3** Hold the grip (A) on the right front side of the toner cover.

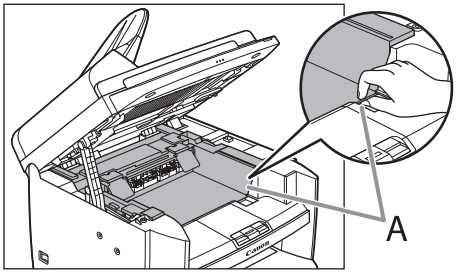


**4** Open the toner cover.

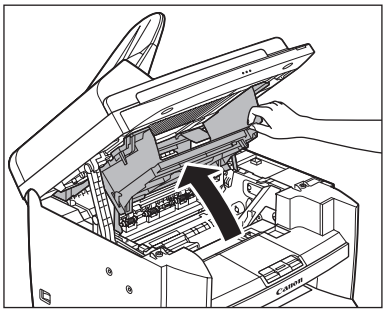

**5** Remove the toner cartridge.

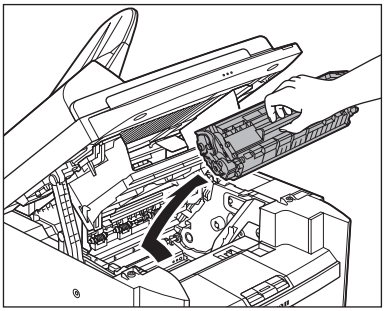

**CAUTION**

Do not touch the rollers and parts which have labels "CAUTION! Hot surface avoid contact" on. They become very hot during use.

**6** Take out the new toner cartridge from the protective bag.

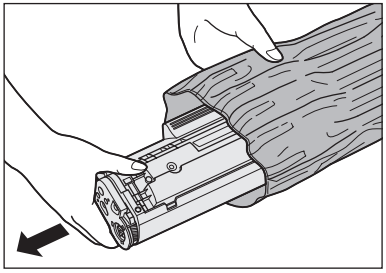

**CAUTION**

Do not open the drum protective shutter (A). Print quality may deteriorate if the drum surface is exposed to light or is damaged.

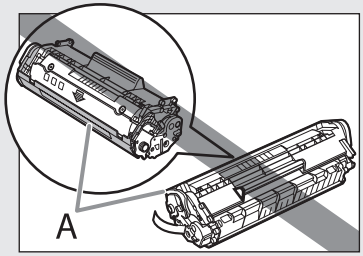


**NOTE**

Save the protective bag. You may need it later when you remove the toner cartridge from the machine.

**7** Gently rock the toner cartridge several times to evenly distribute toner inside.

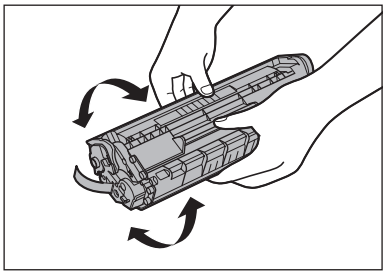

**8** Place the toner cartridge on a flat surface and pull the seal completely out.

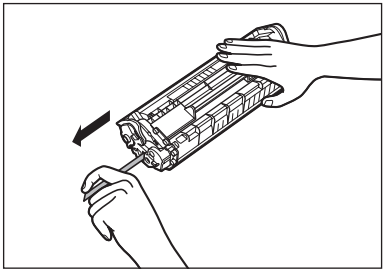

**NOTE**

Do not pull the seal out at an angle.

**CAUTION**

- If toner is adhered on the removed seal, be careful that your hands or clothes do not get dirty from touching the toner.
- If your hands or clothes get dirty from touching the toner, wash them immediately in cold water. Do not use hot water. If you do, the toner may be set permanently.

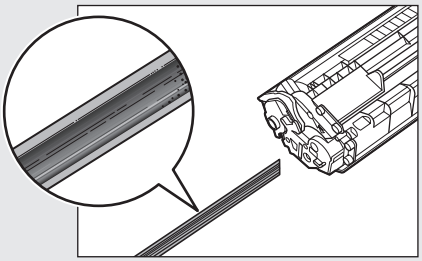

**9** Hold the toner cartridge by its handle (A).

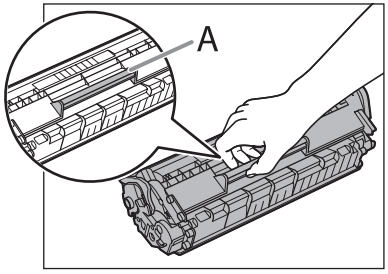


**CAUTION**

Do not open the drum protective shutter (A) on the toner cartridge. Print quality may deteriorate if the drum surface is exposed to light or is damaged.

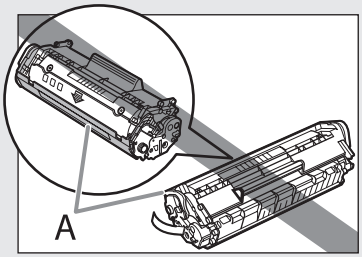


**NOTE**

Always hold the toner cartridge by its handle.

**10** Insert the toner cartridge so that the protrusion (A) on the right side of the toner cartridge fits into the guide (B) located on the right side of the machine and slide it down parallel to the guide.

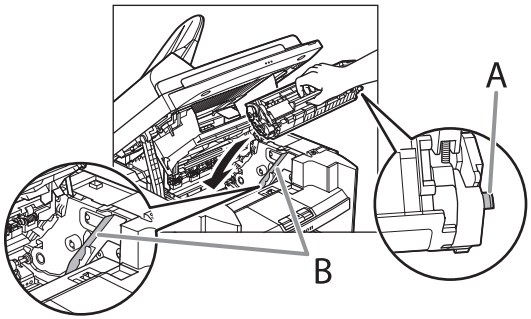


**11** Push the toner cartridge to make sure it is properly set in the machine.

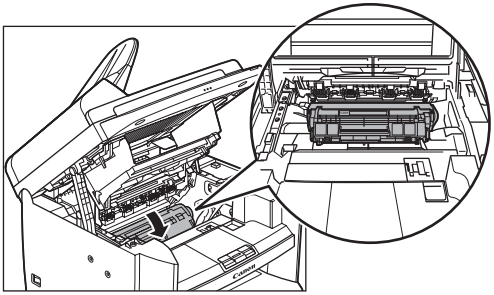

**12** Hold the grip (A) on the right front side of the toner cover.

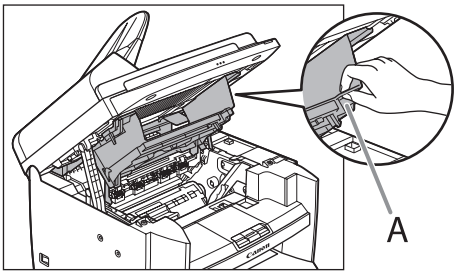

## 13 Close the toner cover.

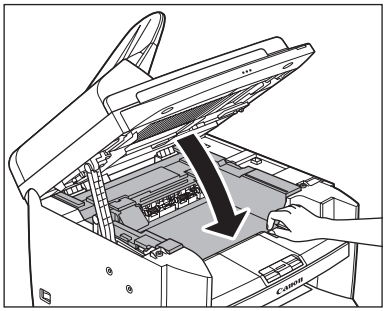

## 14 Lower the scanning platform.

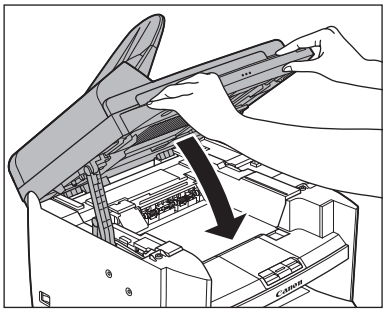

**CAUTION**

- Be careful not to get your fingers caught.
- If you cannot close the toner cover, do not force it to close. Open the cover and make sure the toner cartridge is properly set in the machine.

# Recycling Used Cartridges

Canon has instituted a worldwide recycling program for cartridges called "The Clean Earth Campaign". This program preserves precious natural resources by utilizing a variety of materials found in the used cartridges that are of no further use, to remanufacture new cartridges which, at the same time, keeps the environment cleaner by reducing landfill waste. Complete details concerning this program are enclosed in each Cartridge box.

## The Clean Earth Campaign - The Canon Cartridge Return Program

The Canon Cartridge Return Program fulfills the first initiative of Canon's Clean Earth Campaign, which supports four critical environmental areas:

- Recycling in the Workplace
- Conserving Environmental Resources
- Scientific Research and Education
- Encouraging Appreciation of the Outdoors

"Clean Earth" initiatives supported by Canon in the U.S. include Eyes on Yellowstone, Canon Envirothon, NATURE Series on PBS and The Canon Clean Earth Crew. Initiatives supported in Canada include Canon Envirothon and World Wildlife Fund - Canada.

Since its inception, The Canon Cartridge Return Program has collected millions of cartridges that otherwise would have been discarded into landfills or similar facilities. Instead, this rapidly growing program recovers used cartridges and separates them into components which are then put to various industrial uses.

Becoming a part of this worthwhile program is easy. When your cartridge is of no further use, simply follow the instructions detailed for U.S. or Canadian residents.

We appreciate your support of The Canon Cartridge Return Program.

Working together we can make a significant contribution to a cleaner planet.

- Cartridges collected through this program are not refilled.
- This program may be modified or discontinued without notice.

# The Clean Earth Campaign

*Supporting Environmental Initiatives With*

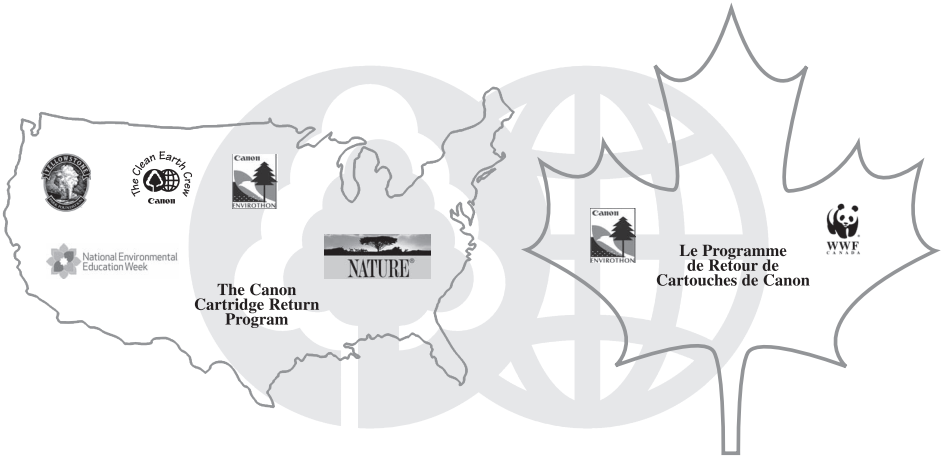


Canon

## U.S.A. PROGRAM

### Packaging

**■One Box Return**

To receive your free eight cartridge collection box:

Call **1-800-OK-CANON**

or

Visit **www.usa.canon.com/cleanearth/return**

**OR**

Place as many cartridges as possible into one box. Carefully seal the box with tape;

**OR**

Place an empty toner cartridge in the box that contained your new toner cartridge.

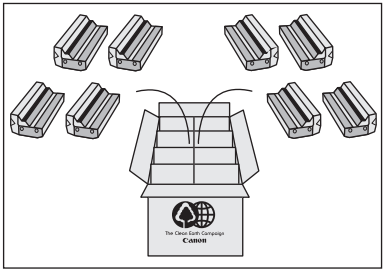

## ■Bundled Return

Bundle multiple cartridge boxes together securely with tape.

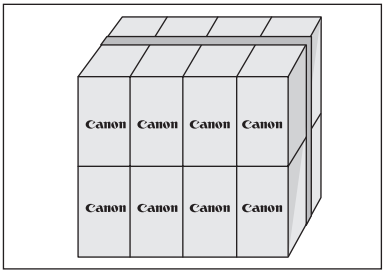


Please be sure that the shipment does not exceed UPS specifications (See Below).
Maximum weight = 70 pounds Maximum length = 108 inches
Maximum girth (length + 2 x width + 2 x height) = 130 inches

Please Note:
**Do not send** defective cartridges for replacement.
Defective cartridges under warranty should be exchanged by an authorized dealer or service facility as provided in the warranty.

## Shipping

Make sure the UPS A.R.S. label is applied.

**■UPS Pick-up**

Give the shipment to your UPS driver when you receive your next regular delivery.

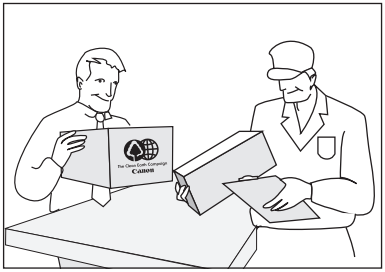


Call 1-800-PICK-UPS for Drop-Off options in your area.

By using either of the above methods of shipment, your used cartridge(s) will be forwarded to the Canon Cartridge Collection Center at no charge to you.

**Residents of Alaska and Hawaii**: Do not use UPS authorized return label.
Alternative return service with the U.S. Postal Service is available by calling
**1-800-OK-CANON** or visit **www.usa.canon.com/cleanearth/return**

For further information about the Clean Earth Campaign in the United States,
please call: **1-800-OK-CANON** or visit **www.usa.canon.com/cleanearth**

## Canadian Program – Programme au Canada

### ■Single Box Return

- Repackage the empty toner cartridge utilizing the wrapper and pulp mould end-blocks from the new cartridge's box.
- Place the empty toner cartridge in the box from your new toner cartridge. Seal the box.
- Apply the Canon Canada Inc./ Canada Post label provided in this brochure. Canon's labels are specially marked so that Canon pays the postage.
- Deposit your empty toner cartridge in any full size street mailbox or take it to your local Canada Post outlet or franchise.

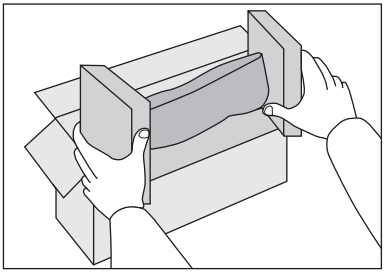

### ■Volume Box Return (Maximum 8 Cartridges)

We encourage you to use this option as a more efficient way to ship cartridges.

- Please tape your eight cartridges together and place them in a box.
- Apply the Canon Canada Inc. / Canada Post label provided in this brochure. Canon's labels are specially marked so that Canon pays the postage.
- Deliver to any local Canada Post outlet or franchise. Customers who hold a Commercial pick-up agreement with Canada Post may have their collection box picked up.

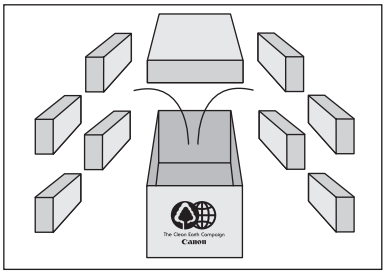


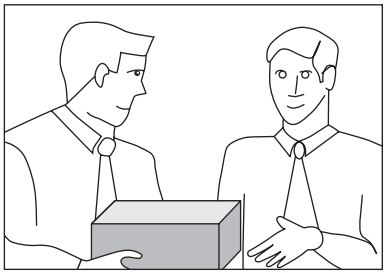

Working to protect the environment is a long-standing Canon interest. To this end, for every cartridge collected, Canon Canada donates funds to World Wildlife Fund - Canada and the Canon Envirothon.

For further information about The Clean Earth Campaign in Canada, please write to Canon.

Canon Canada Inc.
Corporate Customer Relations
6390 Dixie Road
Mississauga, ON L5T 1P7

# Transporting the Machine

**This section describes the required procedures before transporting the machine.**

## For MF4380dn/MF4370dn

Follow this procedure to avoid vibration damage to the machine when transporting it over a long distance.

**1** Turn OFF the main power switch.

**2** Disconnect the power cord and all the cables from the back of the machine.

**3** If you are using the output tray extension, fold the paper stopper, and then push the output tray extension into the machine.

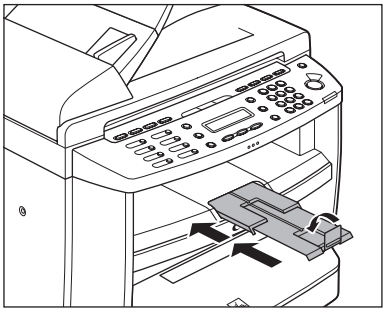

**4** Hold the front side of the operation panel with your hands.

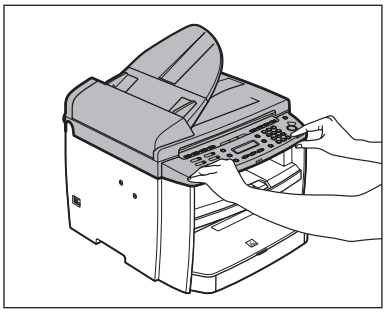

**5** Lift the scanning platform (A) until it is locked. (You will hear an audible "click.")

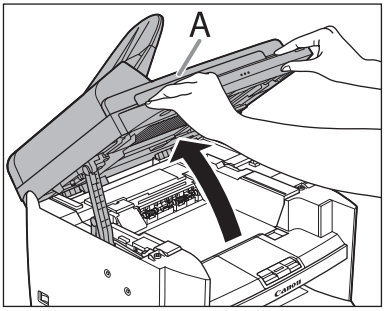


**6** Hold the grip (A) on the right front side of the toner cover.

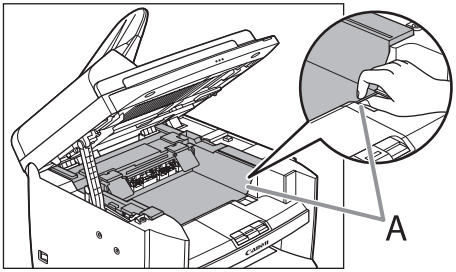


**7** Open the toner cover.

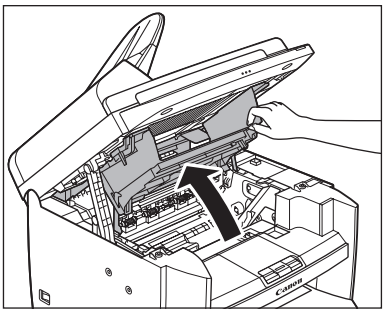

## 8 Remove the toner cartridge.

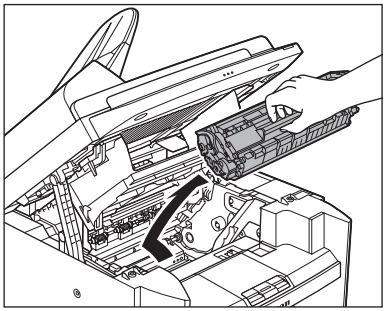

**CAUTION**

- To avoid exposing the toner cartridge to light, place it in its protective bag or wrap it in a thick cloth.
- Do not open the drum protective shutter (A) on the toner cartridge. Print quality may deteriorate if the drum surface is exposed to light or is damaged.

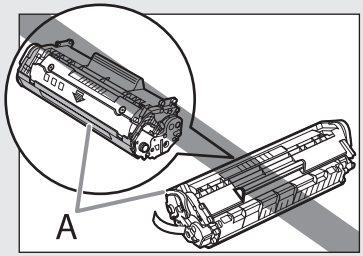


**NOTE**

Always hold the toner cartridge by its handle.

## 9 Hold the grip (A) on the right front side of the toner cover.

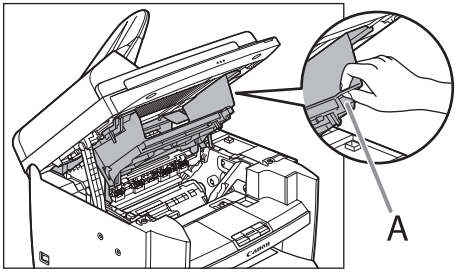


## 10 Close the toner cover.

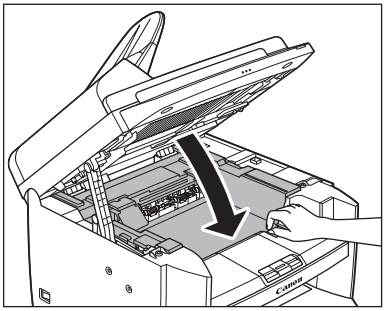

## 11 Lower the scanning platform.

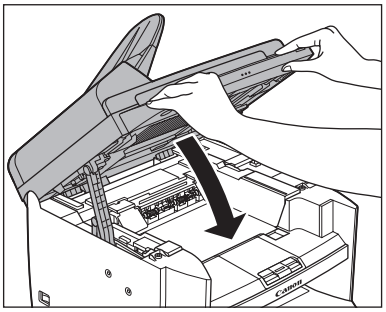

**CAUTION**

Be careful not to get your fingers caught.

**12** Remove the dust cover from the paper cassette.

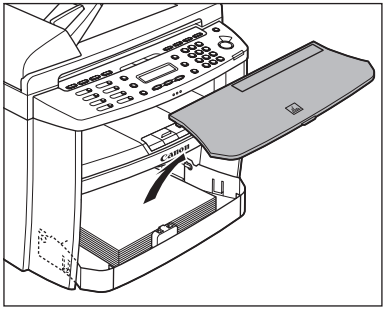

**13** Open the front panel of the paper cassette.

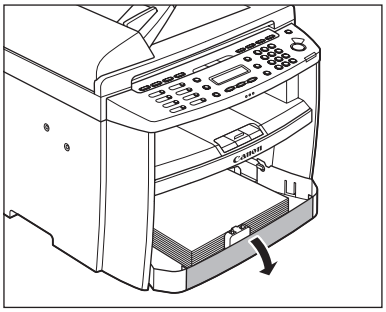

**14** Remove the paper from the paper cassette.

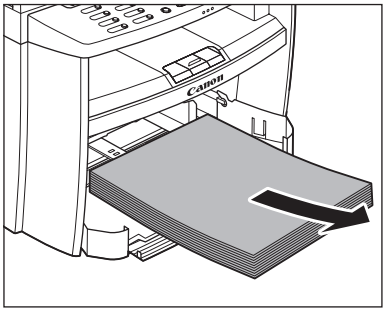

**15** Remove the paper cassette by lifting up the front-end of the paper cassette and pulling it forward.

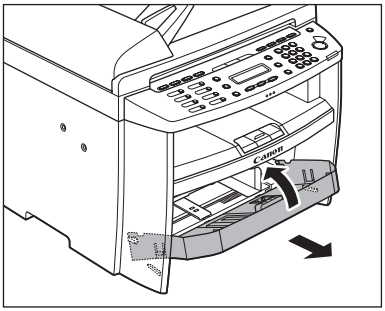

**16** Detach the Document feeder tray.

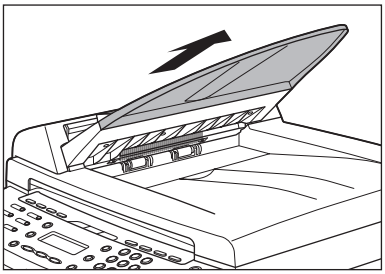

For MF4380dn, skip to step 17.

**17** Make sure all the covers are closed.

**18** Grip the handles on both sides of the machine and lift it carefully, as shown in the illustration below.

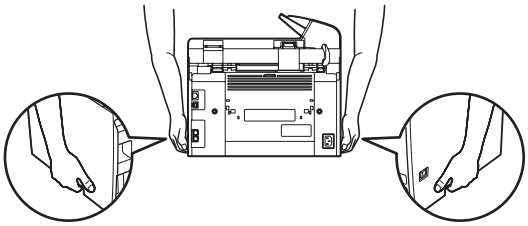

**CAUTION**

- Do not lift the machine by any of its attachments. Dropping the machine can cause personal injury.
- If you have a back problem, make sure to check the weight of this machine before carrying. (See "Specifications," on p. 13-2.)

## For MF4350d

Follow this procedure to avoid vibration damage to the machine when transporting it over a long distance.

**1** Turn OFF the main power switch.

**2** Disconnect the power cord and all the cables from the back of the machine.

**3** If you are using the output tray extension, fold the paper stopper, and then push the output tray extension into the machine.

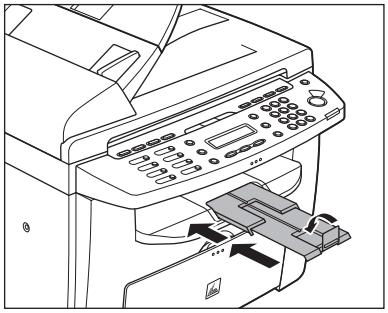

**4** Hold the front side of the operation panel with your hands.

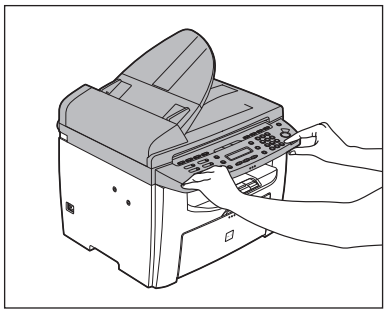

**5** Lift the scanning platform (A) until it is locked. (You will hear an audible "click.")

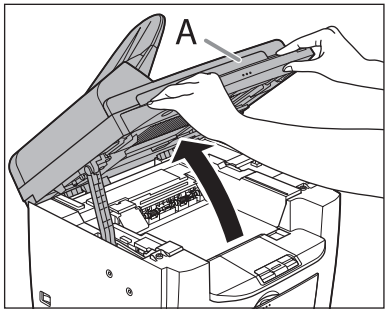

**6** Hold the grip (A) on the right front side of the toner cover.

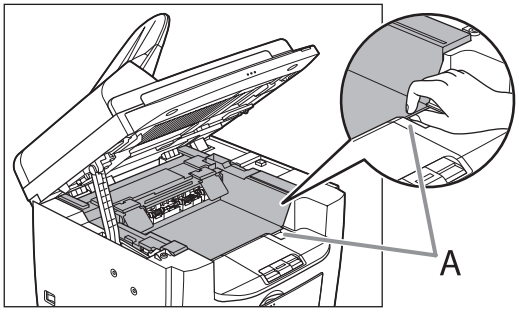


**7** Open the toner cover.

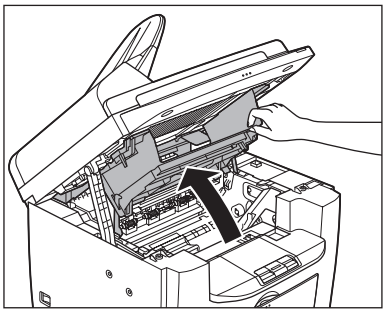

**8** Remove the toner cartridge.

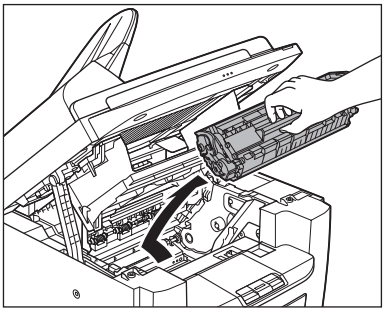

**CAUTION**

- To avoid exposing the toner cartridge to light, place it in its protective bag or wrap it in a thick cloth.
- Do not open the drum protective shutter (A) on the toner cartridge. Print quality may deteriorate if the drum surface is exposed to light or is damaged.

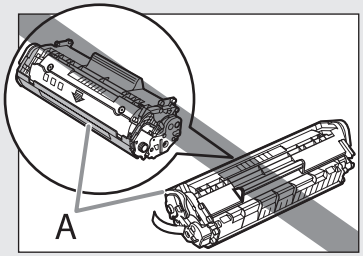


**CAUTION**

Always hold the toner cartridge by its handle.

**9** Hold the grip (A) on the right front side of the toner cover.

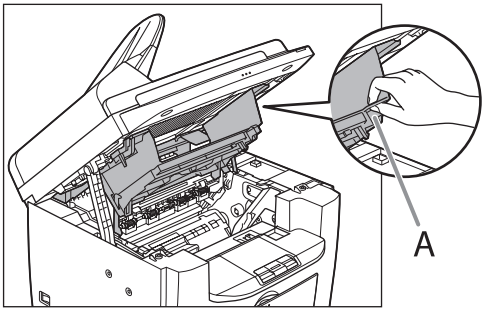


**10** Close the toner cover.

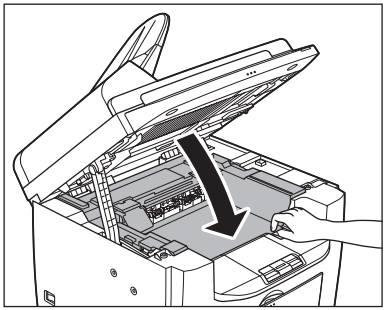

**11** Lower the scanning platform.

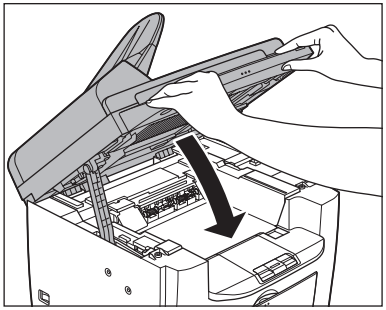

**CAUTION**

Be careful not to get your fingers caught.

**12** Remove the dust cover from the paper feeding tray.

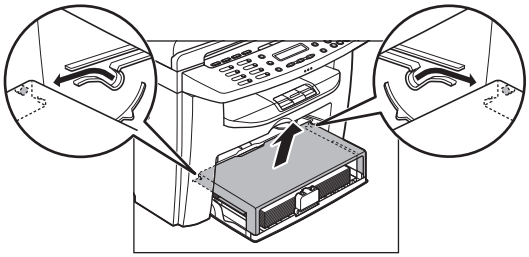

**13** Remove the paper from the paper feeding tray.

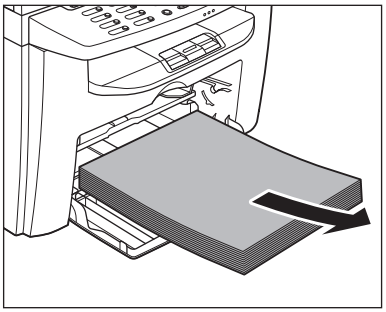

**14** Store the dust cover inside the machine.

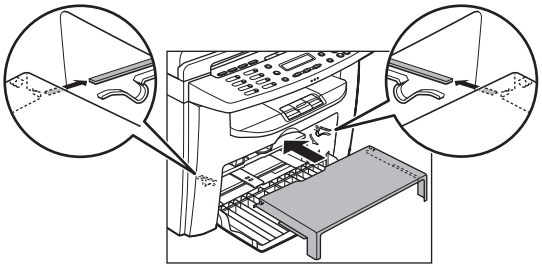

**15** Push the paper guide rail, and then close the paper feeding tray.

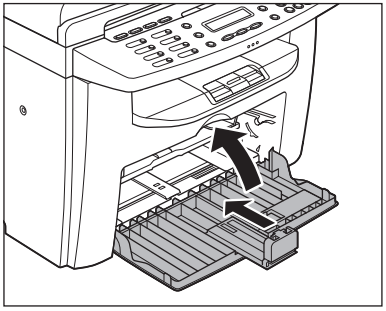

**16** Detach the Document feeder tray.

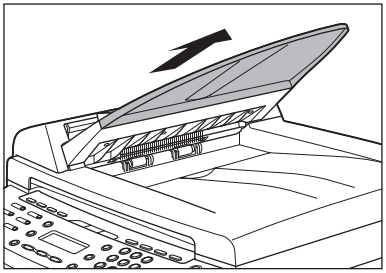

**17** Make sure all the covers are closed.

**18** Grip the handles on both sides of the machine and lift it carefully, as shown in the illustration below.

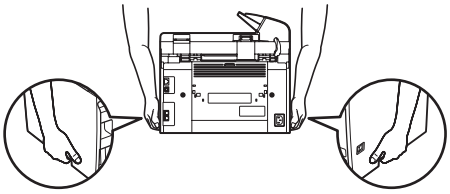

**CAUTION**

- Do not lift the machine by any of its attachments. Dropping the machine can cause personal injury.
- If you have a back problem, make sure to check the weight of this machine before carrying. (See "Specifications," on p. 13-2.)

# Troubleshooting

Chapter 11

**This chapter describes how to respond to paper and document jams, as well as to error messages.**


**Clearing Jams.....11-2**
Document Jams.....11-2
Paper Jams.....11-5
**Error Messages.....11-16**
**Error Codes.....11-19**
**If <LOAD CORRECT PAPER> is displayed .....11-20**
Reloading the Paper.....11-20
Changing the Paper Size Setting.....11-20
**If a Power Failure Occurs.....11-21**
**If You Cannot Solve a Problem.....11-22**
Customer Support (U.S.A.).....11-22
Customer Support (Canada).....11-22

# Clearing Jams

**When <CHECK DOCUMENT>, <PAPER JAM> or <PAPER JAM/OPEN REAR COVER> appears on the display, remove jammed paper from the machine first, then from the paper cassette or multi-purpose tray if necessary. Check the following if you experience repeated paper jams:**

- **Fan and tap the paper stack on a flat surface before loading it in the machine.**
- **Check that the paper you are using meets the requirements for use. (See "Paper Requirements," on p. 2-6.)**
- **Make sure you have removed any scraps of paper from the inside of the machine.**

**CAUTION**

- When removing jammed documents or paper, take care not to cut your hands on the edges of the document or paper.
- When removing jammed paper or when inspecting the inside of the machine, do not allow necklaces, bracelets, or other metal objects to touch the inside of the machine, as this may result in burns or electrical shock.
- If you tear the paper, remove any torn pieces to avoid further jams.
- If loose toner comes into contact with your skin or clothing, wash with cold water. Warm water will set the toner.

**NOTE**

Do not force a jammed document or paper out of the machine. Contact Canon Customer Care Center if needed.

## Document Jams

When <CHECK DOCUMENT> appears on the display, remove a jammed document from the ADF.

### For MF4380dn

**1** Open the ADF cover.

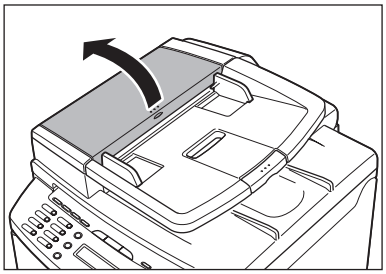

**2** Hold both sides of any jammed documents and gently pull them out straight upward.

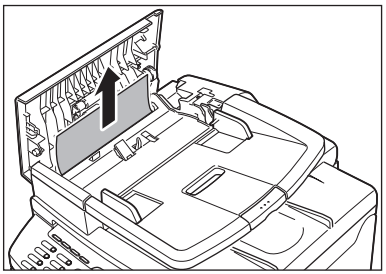

**CAUTION**

Do not force a jammed document out of the machine. If the jammed document cannot be removed easily, proceed to the next step.

**3** Open the inner cover, holding it by its front tab (A).

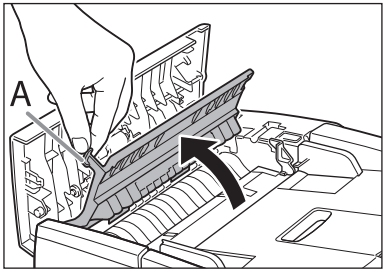


**4** Lift the release lever (A) until it clicks into place.

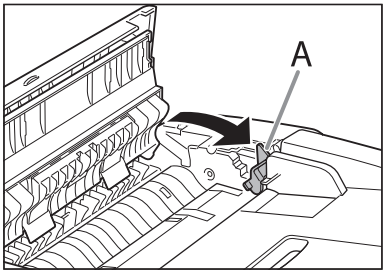


**5** Remove the jammed document.

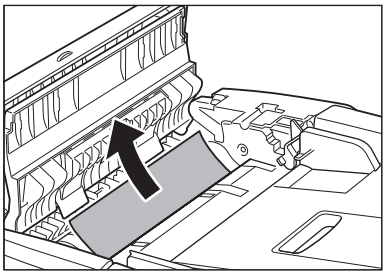

**NOTE**

Do not force a jammed paper out of the machine as it may tear.

**6** Return the release lever (A) to its original position.

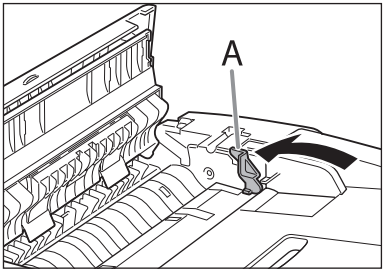


**7** Close the inner cover.

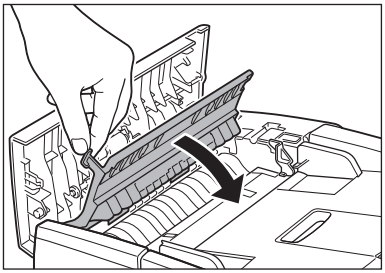

**8** Close the ADF cover.

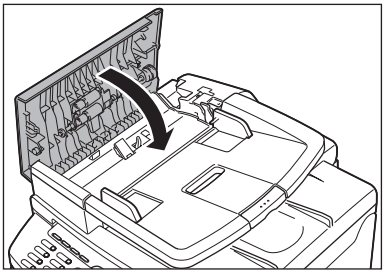

**CAUTION**

Be careful not to get your fingers caught.

**9** Open the ADF and then hold both sides of any jammed documents and gently pull them out.

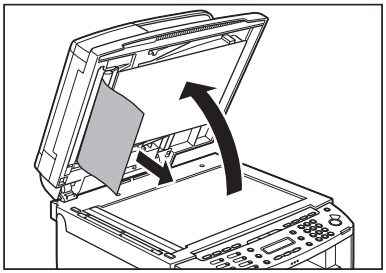

**10** Close the ADF.

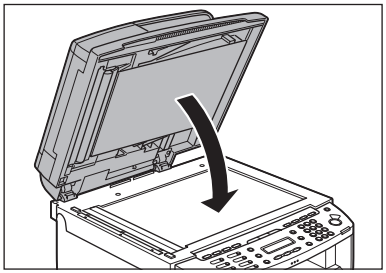

**CAUTION**

Be careful not to get your fingers caught.

## For MF4370dn/MF4350d

**1** Open the ADF cover.

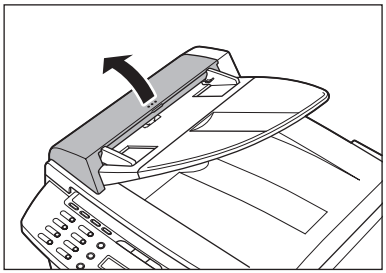

**2** Hold both sides of any jammed documents and gently pull them out straight upward.

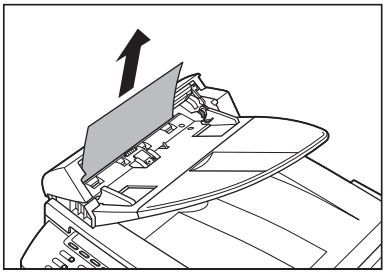

**NOTE**

Do not pull the document forcefully as it may tear.

**3** Hold both sides of any jammed documents and gently pull them out.

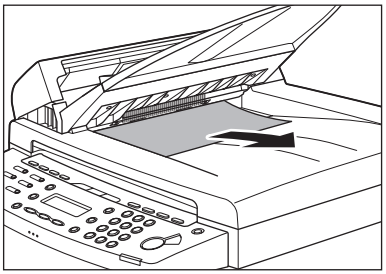

**4** Close the ADF cover.

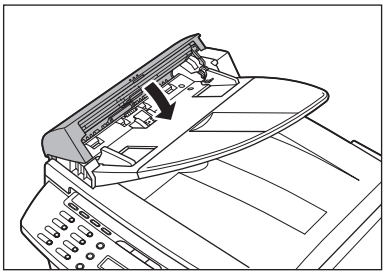

**CAUTION**

Be careful not to get your fingers caught.

**5** Open the ADF and then hold both sides of any jammed documents and gently pull them out.

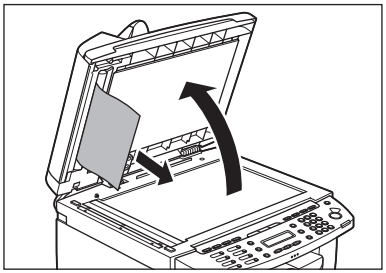

**6** Close the ADF.

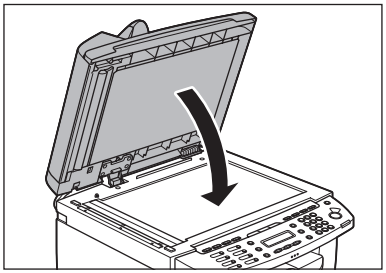

**CAUTION**

Be careful not to get your fingers caught.

## Paper Jams

When <PAPER JAM> or <PAPER JAM/OPEN REAR COVER> appears on the display, remove jammed paper from the inside of the machine first, then from the paper cassette or multi-purpose tray if necessary.

### MF4380dn/MF4370dn

**1** Hold the front side of the operation panel with your hands.

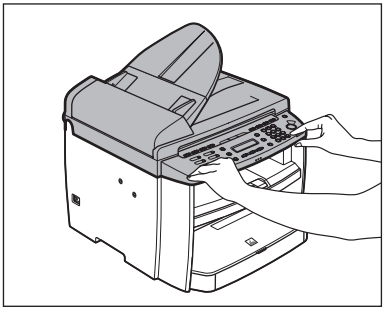

**2** Lift the scanning platform (A) until it is locked. (You will hear an audible "click.")

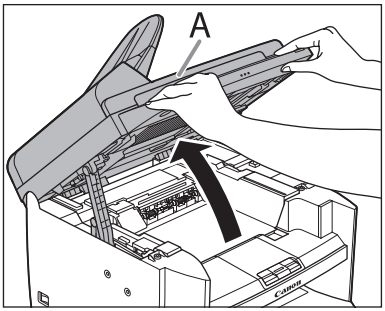

**3** Hold the grip (A) on the right front side of the toner cover.

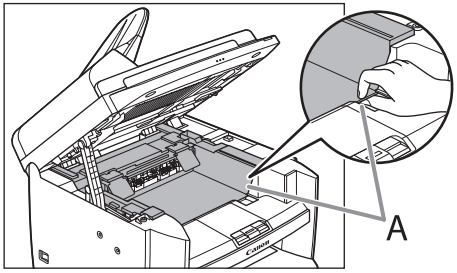


**4** Open the toner cover.

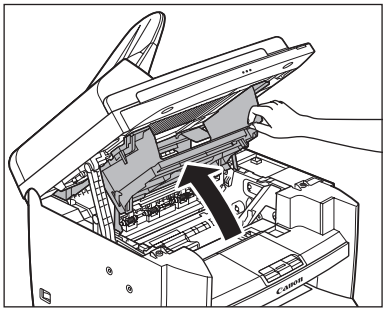

**5** Remove the toner cartridge from the machine.

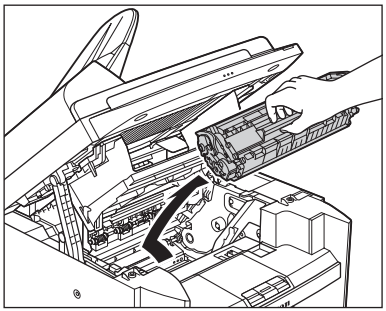

**CAUTION**

- Do not touch the rollers and parts which have labels "CAUTION! Hot surface avoid contact" on. They become very hot during use.
- Remove watches and any bracelets or rings when touching the inside of the machine. These items might be damaged if they come into contact with the parts inside of the machine.
- To avoid exposing the toner cartridge to light, place it in its protective bag or wrap it in a thick cloth.
- Do not open the drum protective shutter on the toner cartridge. Print quality may deteriorate if the drum surface is exposed to light or is damaged.
- Do not touch the fixing assembly (A) as it becomes very hot during use.
- Do not touch the transfer roller (B) as this can damage the machine.

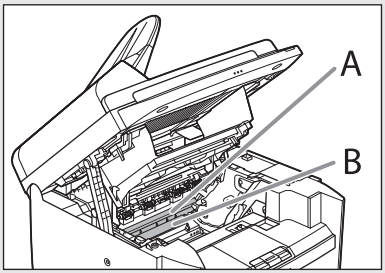


**NOTE**

Always hold the toner cartridge by its handle (A).

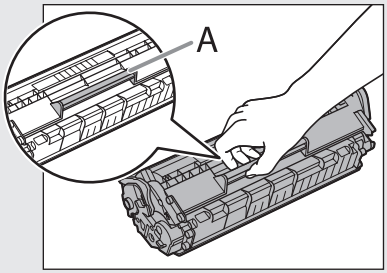

**6** Hold both sides of the jammed paper and gently pull it out.

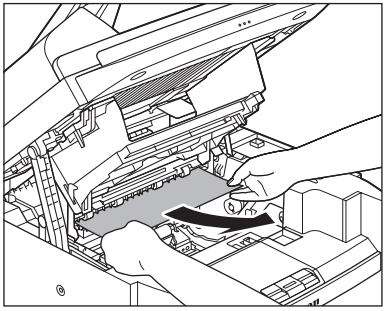

**7** Gently pull the jammed paper between the fixing assembly (A) and transfer roller (B) until the leading edge emerges from the machine.

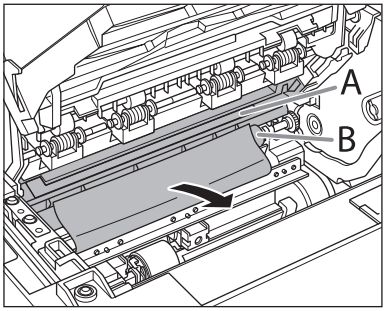


**CAUTION**

- Do not touch the fixing assembly (A) as it becomes very hot during use.
- Do not touch the transfer roller (B) as this can damage the machine.

**8** Hold both sides of the jammed paper and carefully pull it out.

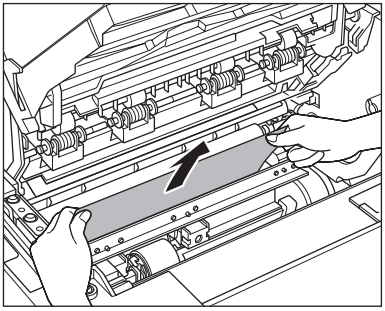

**9** Hold the toner cartridge by its handle (A).

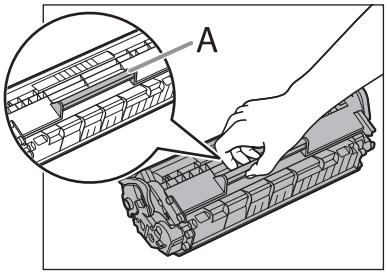


**CAUTION**

Do not open the drum protective shutter on the toner cartridge. Print quality may deteriorate if the drum surface is exposed to light or is damaged.

**NOTE**

Always hold the toner cartridge by its handle.

**10** Insert the toner cartridge so that the protrusion on the right side of the toner cartridge (A) fits into the guide (B) located on the right side of the machine and slide it down parallel to the guide.

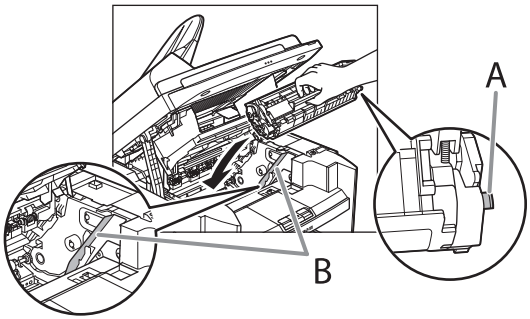


**11** Push down the toner cartridge to make sure it is properly set in the machine.

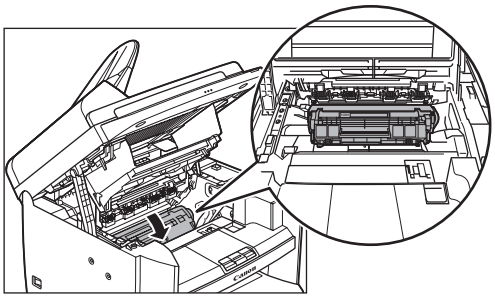

**12** Hold the grip (A) on the right front side of the toner cover.

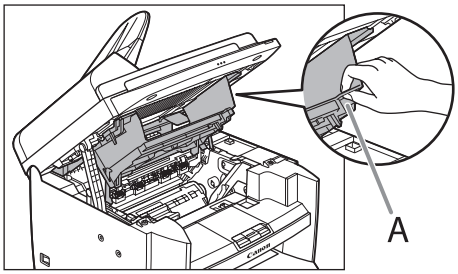


**13** Close the toner cover.

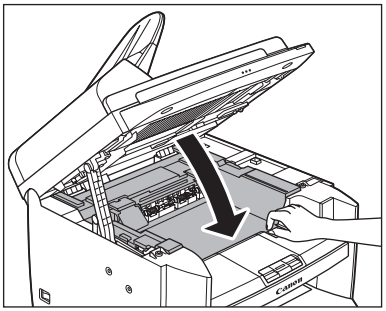

**14** Lower the scanning platform.

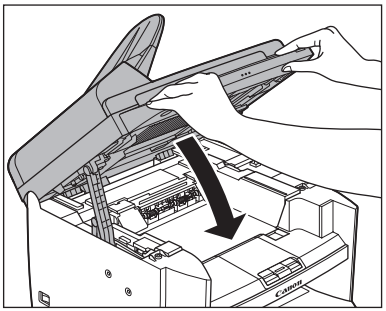

**CAUTION**

- Be careful not to get your fingers caught.
- If you cannot close the toner cover, do not force it to close. Open the cover and make sure the toner cartridge is properly set in the machine.

**15** Remove the dust cover from the paper cassette.

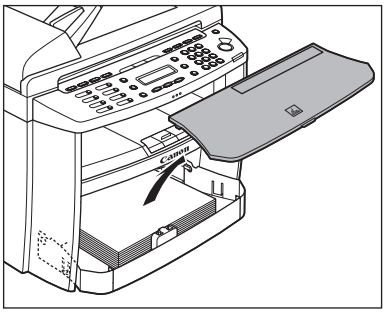

**16** Open the front panel of the paper cassette.

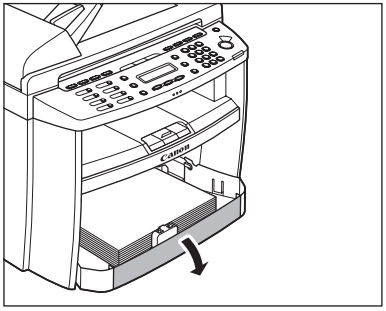

**17** Remove the paper in the paper cassette.

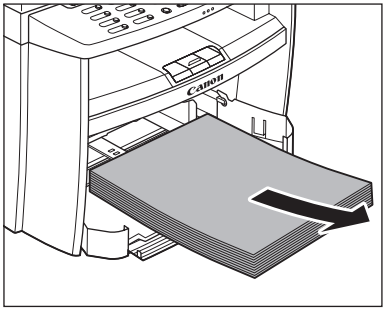

**18** Hold both sides of the jammed paper and slowly pull it out in the direction of the arrow.

■ When feeding paper from the paper cassette:

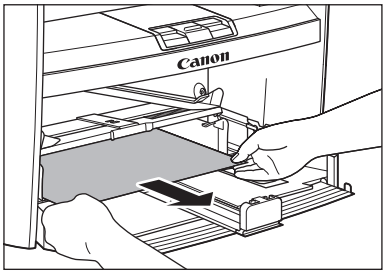

■ When feeding paper from the multi-purpose tray:

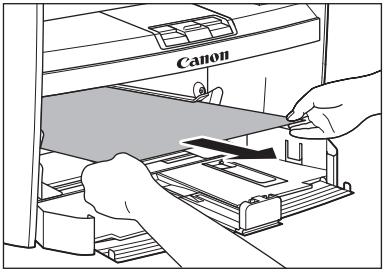

**19** Load the paper into the paper cassette.

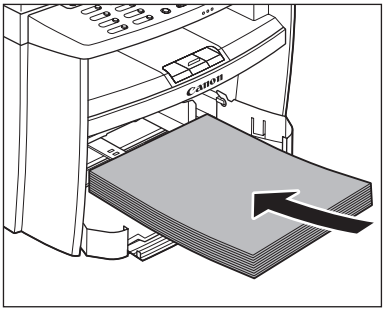

**20** Close the front panel of the paper cassette.

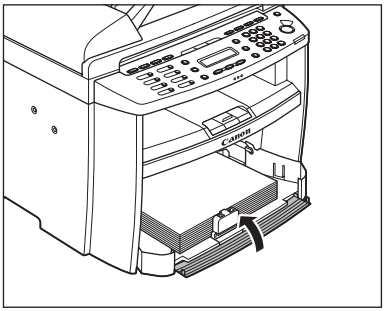

## 21 Set the dust cover on the paper cassette.

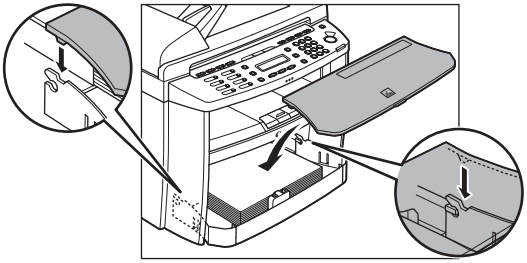

## 22 Open the rear cover.

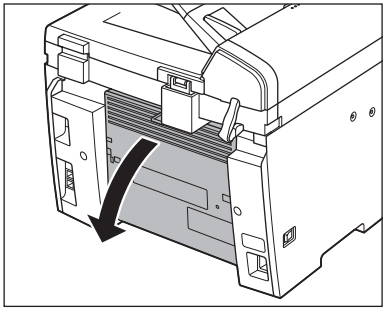

This operation is required only when <OPEN REAR COVER> appears on the display.

## 23 Hold both sides of the jammed paper and gently pull it out upward.

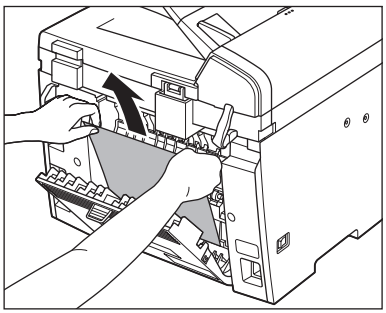

- This operation is required only when <OPEN REAR COVER> appears on the display.
- If the jammed paper is badly folded, similar to the folds of an accordion, ease the jammed paper loose and then pull it out from the machine.

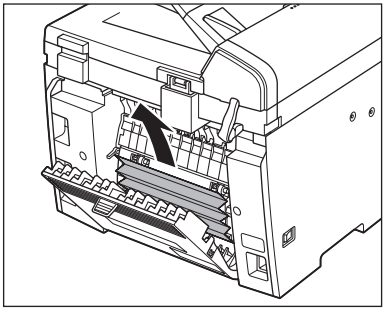

## 24 Close the rear cover.

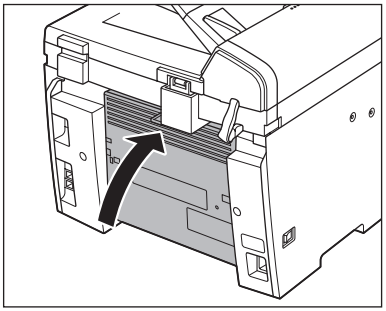

This operation is required only when <OPEN REAR COVER> appears on the display.

**CAUTION**

Be careful not to get your fingers caught.

**NOTE**

To reset the machine, open the toner cover and then close it.

## For MF4350d

**1** Remove the dust cover from the paper feeding tray.

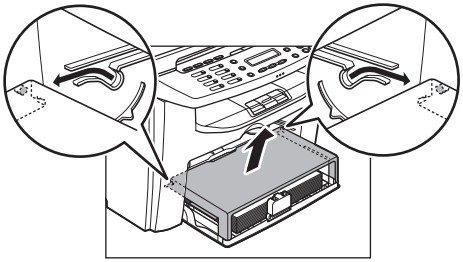

**2** Remove the paper in the paper feeding tray.

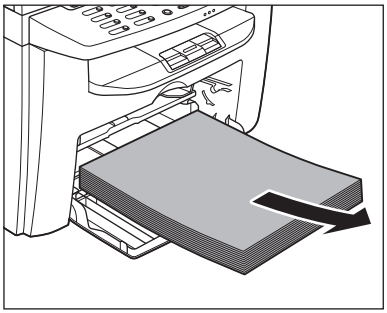

**3** Open the rear cover.

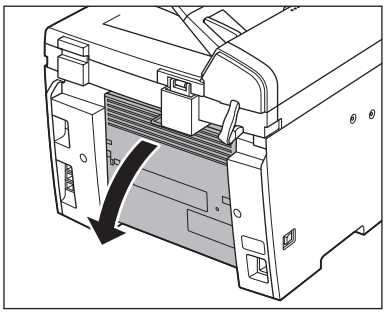

This operation is required only when <PAPER JAM/OPEN REAR COVER> appears on the display.

**4** Lift the scanning platform until it is locked (A), and open the printer cover (B).

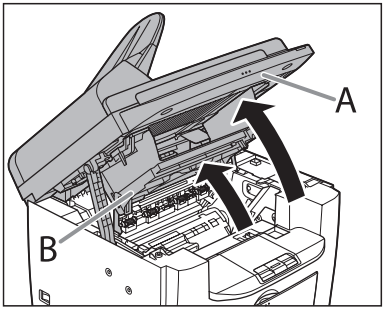

**5** Remove the toner cartridge from the machine.

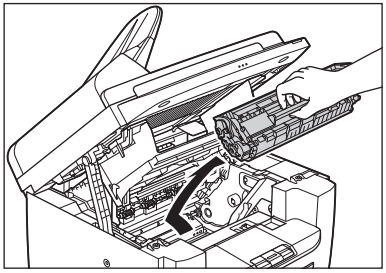

**CAUTION**

- Remove watches and any bracelets or rings when touching the inside of the machine. These items might be damaged if they come into contact with the parts inside of the machine.
- To avoid exposing the toner cartridge to light, place it in its protective bag or wrap it in a thick cloth.
- Do not open the drum protective shutter on the toner cartridge. Print quality may deteriorate if the drum surface is exposed to light or is damaged.
- Do not touch the fixing assembly (A) as it becomes very hot during use.
- Do not touch the transfer roller (B) as this can damage the machine.

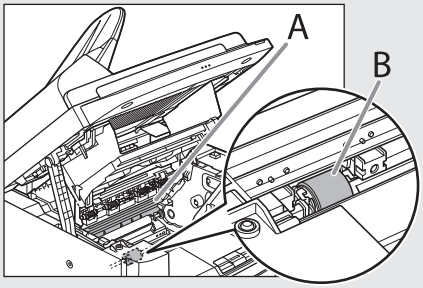


**NOTE**

Always hold the toner cartridge by its handle (A).

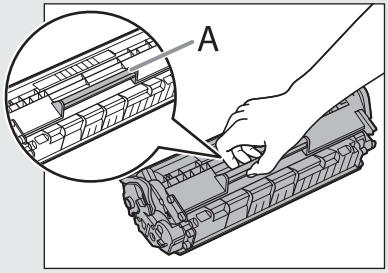


**6** Hold both sides of the jammed paper and gently pull it out.

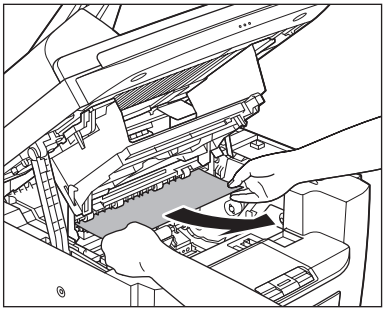

**7** Gently pull the jammed paper between the fixing assembly (A) and transfer roller (B) until the leading edge emerges from the machine.

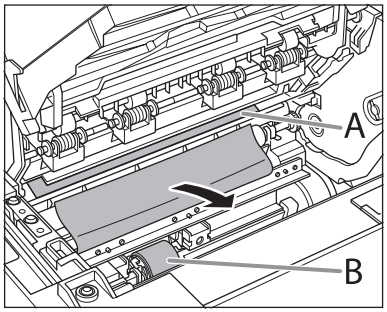

**8** Hold both sides of the jammed paper and carefully pull it out.

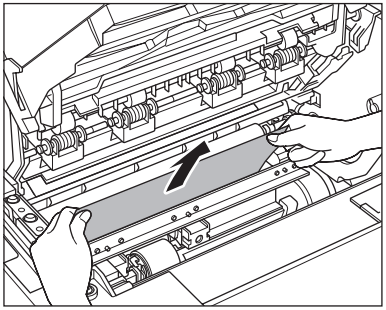

**9** Hold both sides of the jammed paper and gently pull it out upward.

– This operation is required only when <PAPER JAM/OPEN REAR COVER> appears on the display.

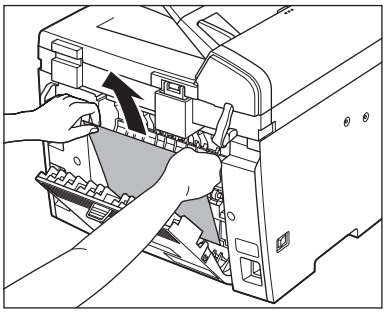

– If the jammed paper is badly folded, similar to the folds of an accordion, ease the jammed paper loose and then pull it out from the machine.

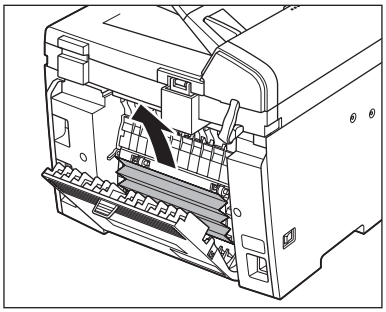

**10** Hold both sides of the jammed paper and slowly pull it out in the direction of the arrow.

■ When feeding paper from the paper feeding tray:

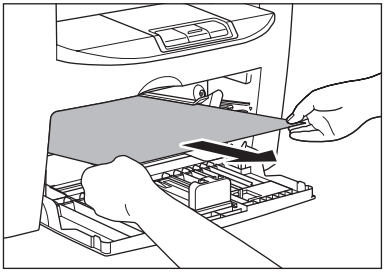

■ When feeding paper from the multi-purpose tray:

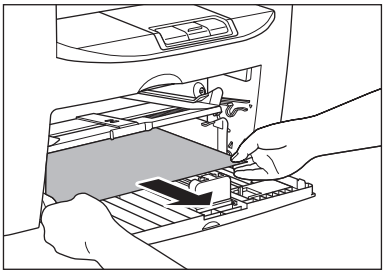

## 11 Hold the toner cartridge by its handle.

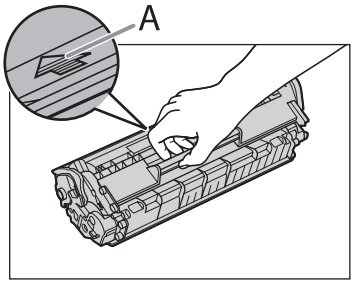


The arrow (A) on the toner cartridge should be facing away from you and pointing down.

**CAUTION**

Do not open the drum protective shutter on the toner cartridge. Print quality may deteriorate if the drum surface is exposed to light or is damaged.

## 12 Insert the toner cartridge into the machine as far as it will go.

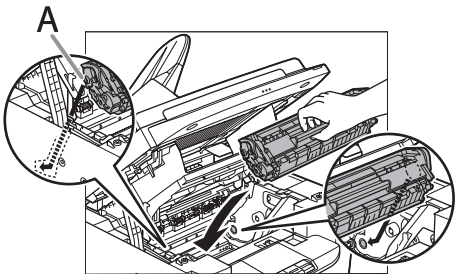


Align the guide (A) on the left side of the toner cartridge with the groove inside the machine.

## 13 Push down the toner cartridge to make sure it is properly set in the machine.

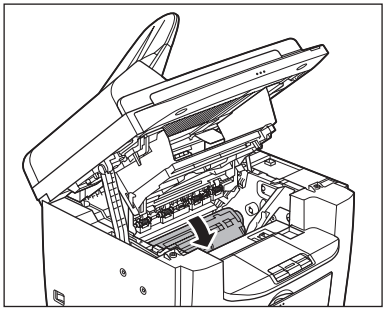

## 14 Close the printer cover and lower the scanning platform.

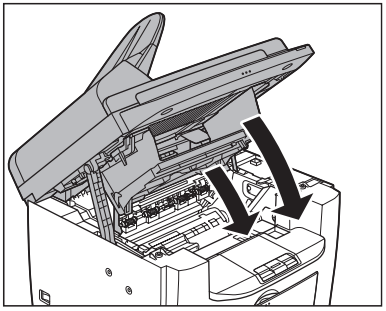

**CAUTION**

Be careful not to get your fingers caught.

## 15 Close the rear cover.

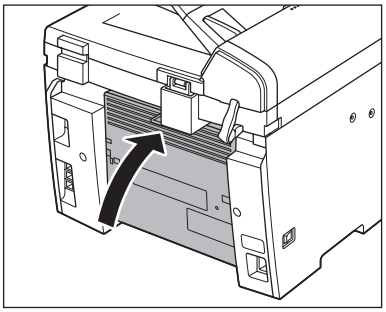

This operation is required only when <PAPER JAM/OPEN REAR COVER> appears on the display.

**CAUTION**

Be careful not to get your fingers caught.

**NOTE**

To reset the machine, open the toner cover and then close it.

**16** Load the paper into the paper feeding tray.

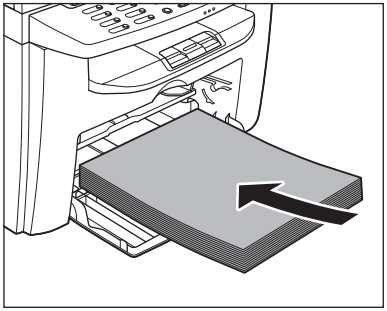

**17** Set the dust cover on the paper feeding tray.

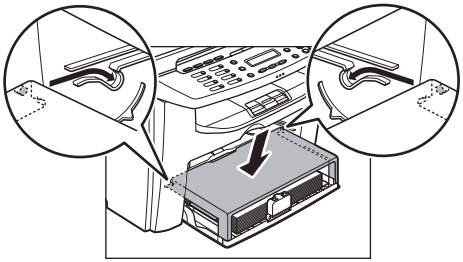

**NOTE**

After all the procedures are completed, the machine should be ready for operating. If the machine returns to the standby mode, troubleshooting has been successful. If the machine does not return to the standby mode, check if jammed paper is still left in the machine.

# Error Messages

**See the table below when the error and status messages appear on the display.**

| Message | Description | Action |
|---|---|---|
| **AVAILABLE MEMORY nn%** | This message shows the percentage of the memory currently available. | If you need more space, wait for the machine to send any documents in memory. Also print, send, or delete any documents stored in memory. |
| **CANNOT PRINT RX DATA** | The machine temporarily received the fax in memory because an error of some kind has occurred in the machine.<br>This error message appears with one of the messages below.<br>– <CLOSE COVER/TONER COVER><br>– <LOAD CORRECT PAPER><br>– <REMOVE MP PAPER><br>– <CHANGE REG'D SIZE/ → PAPER SETTINGS><br>– <OUT OF TONER/CHANGE TONER><br>– <SET PAPER AGAIN/SET TONER AGAIN><br>– <PAPER JAM><br>– <PAPER JAM/OPEN REAR COVER><br>– <LOAD PAPER> | This error message appears with another message. When the error is resolved, the received data will be printed out. For how to solve the problem, see the action for the messages displayed with it. |
| **CHANGE REG'D SIZE → PAPER SETTINGS** | The paper size is not appropriate for your print jobs. | – To print reports or received data, set the <CASSETTE> paper size to <LTR>, <LGL>, <A4>, <B5>, <OFICIO>, <BRAZIL- OFICIO>, <MEXICO-OFICIO>, <GOVERNMENT-LETTER>, <GOVERNMENT-LEGAL>, or <FOOLSCAP>. For details, see "Setting Paper Size and Type," on p. 2-14.<br>– To print received data on both sides of paper, set the <CASSETTE> paper size to <LTR> or <A4>. For details, see "Setting Paper Size and Type," on p. 2-14.<br>– For 2-sided copying, set the paper size to <LTR> or <A4>. For details, see "Setting Paper Size and Type," on p. 2-14. |
| **CHECK DOCUMENT** | A document jam may have occurred in the ADF. | Remove the jammed document. |
| **CLOSE COVER TONER COVER** | The toner cover is not closed completely. | Check the toner cover, and make sure that it is completely closed. |
| **HANG UP PHONE** | The external telephone is off the hook. | Hang up the external telephone. |
| **LIFT PANEL TO OPEN OPEN TONER COVER** | Appears alternately with other messages. | Varies by the message that appears. For details, see the explanation for the message (i.e., <SET PAPER AGAIN/SET TONER AGAIN>). |

| Message | Description | Action |
|---|---|---|
| **LOAD CORRECT PAPER** | The size of the paper in the paper cassette or multi-purpose tray is different from that of the paper specified in <PAPER SIZE> for <CASSETTE> or <MP TRAY>. | Load the correct size paper or change the paper size in <PAPER SIZE> for <CASSETTE> or <MP TRAY>. For details, see "If <LOAD CORRECT PAPER> is displayed," on p. 11-20. |
| **LOAD PAPER** | – No paper is loaded in the paper cassette or multipurpose tray when copying or printing.<br>– No paper is loaded in the paper cassette or multi-purpose tray when printing a received document.<br>Or, when printing a report or list, this message appears if the paper size is not appropriate for printing a report or list even if paper is loaded. This error message appears with one of the messages below.<br><CHANGE REG'D SIZE/→PAPER SETTINGS><br><CANNOT PRINT RX DATA> | – Load paper correctly. Then press [OK] when using the paper cassette.<br>– Load paper correctly. Then press [OK] when using the paper cassette. For report or list, set the paper size to <LTR>, <LGL>, <A4>, <B5>, <OFICIO>, <BRAZIL- OFICIO>, <MEXICO- OFICIO>, <GOVERNMENT-LETTER>, <GOVERNMENT-LEGAL>, or <FOOLSCAP>, and then load paper of the same size. |
| **LOST IMAGE** | The machine was turned OFF with documents stored in the machine's memory. Please note that any data stored in the memory, including received fax documents, will be deleted if you leave the machine turned OFF for about 5 minutes. | The error is automatically released after two seconds, and the machine automatically prints out the lost report that shows the records still existing in the activity report. |
| **MEMORY FULL** | – The machine is full of jobs.<br>– The number of TX/RX jobs that can be stored in memory reached the Maximum. | – Print, send, or delete any documents stored in memory.<br>– Divide the document stack or data into a few parts and try again one by one.<br>– Send the document with low resolution.<br>– The machine memory can store up to 256 fax jobs including sending and receiving jobs. (Based on the condition that the other party sends the fax by the imageCLASS MF4380dn with ITU-T Standard Chart No.1, standard mode.) Wait for the machine to send any faxes in memory. Also print or delete any documents in memory. |
| **NOT AVAILABLE** | – You pressed the one-touch key that has already been registered, when you are registering group dialing.<br>– You selected the group dialing that has already been registered, when you are registering a one-touch key. | Register the one-touch key that is not used. |
| **NOT REGISTERED** | No recipient is registered for the one-touch key or coded dial code you pressed. | Register the recipients before using the Address Book function. |
| **OUT OF TONER CHANGE TONER** | The toner ran out completely. | Replace the toner cartridge. |

| Message | Description | Action |
|---|---|---|
| **PAPER JAM** | Paper jams have occurred in the machine. <LIFT PANEL TO OPEN/OPEN TONER COVER> appears alternately. | Clear the paper jam (See "Clearing Jams," on p. 11-2) and reload paper in the paper cassette or multi-purpose tray. The cover must be opened and closed to resume the current job. |
| **PAPER JAM**<br>**OPEN REAR COVER** | Paper jams have occurred in the machine. <LIFT PANEL TO OPEN/OPEN TONER COVER> appears alternately. | Clear the paper jam (See "Clearing Jams," on p. 11-2) and reload paper in the paper cassette or multi-purpose tray. The cover must be opened and closed to resume the current job. |
| **PLEASE WAIT** | This message appears when turning on the main power switch, or when the machine is not ready for printing. | Wait until the message disappears. |
| **REMOVE MP PAPER** | Paper is loaded in the multi-purpose tray. | Remove the paper from the multi-purpose tray. The machine will not print faxes, reports, or lists when paper is loaded in the multi-purpose tray. They will be stored in memory. |
| **SET PAPER AGAIN**<br>**SET TONER AGAIN** | Paper is not loaded properly, or the toner cartridge is not set. | Load paper properly. (For instructions on how to load paper in the paper cassette or multi-purpose tray, see "Loading Paper," on p. 2-8.) Set the toner cartridge in the machine (see "Set Up the Machine," in the Starter Guide or "Setting Up the Machine," in the e-Manual). |
| **SYSTEM ERROR**<br>**EXXX** | A system error has occurred. <XXX> will be a three-digit code that indicates a particular type of error. | Turn OFF the main power switch, wait for more than 5 seconds, then turn it ON again. If the message persists, turn OFF the main power switch, disconnect the power cord, and contact Canon Customer Care Center. |
| **WRONG PASSWORD** | The memory lock reception password or system password you entered is incorrect. | Enter the correct password. For details, see "Receiving Documents in Memory without Printing Out (Memory Lock Reception)," on p. 5-41 or "Security," in the e-Manual. |

# Error Codes

**An error code is a four-digit code shown on an ERROR TX REPORT or an RX REPORT when an error occurs.**

12/31/2008 15:50 1 123XXXXXX CANON P.001

**********
*** ERROR TX REPORT ***
**********

| JOB NO. | MODE | NO. | DESTINATION TEL/ID | START TIME | PAGE | RESULT |
|---|---|---|---|---|---|---|
| 0001 | TX G3 | 001 | CANON USA<br>34733126 | 12/31 15:50 | 010 | NG 02'21 |
| | | | 00A0:TX CANCEL | | | |

**Error Code**

For details on reports, see "Introduction of the Machine," in the e-Manual.

See the table below for individual error codes.

| Error Code | Description | Action |
|---|---|---|
| **00A0** | Transmission was manually canceled on the machine. | Resend the document if necessary. |
| **00A1** | There is a document jam. | Clear the document jam. |
| **00FF** | All redialing attempts have failed. | Check if the recipient's number is correct or the telephone cable is properly connected, and try again. |
| **0001** | The sender may not be using a G3 fax machine. | Make sure the sender's machine is compatible with your machine. |
| **0070** | Reception was manually canceled on the machine. | Ask the sender to resend the document if necessary. |
| **0071** | The machine's memory is full. | Print, send, or delete any documents stored in memory. |
| **0080** | The recipient's machine did not respond within 35 seconds. | Resend the document. Ask the other party to check their machine. If you are making an overseas call, add a pause to the number. |
| **008D** | The recipient's machine has run out of paper. | Ask the recipient to make sure that paper is loaded in their machine. |

# If <LOAD CORRECT PAPER> is displayed

**When <LOAD CORRECT PAPER> appears on the display, the size of the paper in the paper cassette or multi-purpose tray is different from that of the paper specified in <PAPER SIZE> for <CASSETTE> or <MP TRAY>. You need to load the correct size paper or change the paper size in <PAPER SIZE> for <CASSETTE> or <MP TRAY>.**

**NOTE**

For print jobs, you need to specify the paper size from your computer.

## Reloading the Paper

**1** Load the correct size paper as shown on the display, then press [OK] to resume the job.

The machine re-starts printing.

## Changing the Paper Size Setting

Follow this procedure to change the paper size setting.

**1** Press ○ [Paper Settings] repeatedly to select <CASSETTE> or <MP TRAY>, then press [OK].

```
CASSETTE
```

**NOTE**

If <LOAD CORRECT PAPER> appears during a copy job, you cannot access the paper size setting through ○ [Paper Settings]. In this case, cancel the job first, then press ○ [Paper Settings] and change the paper size setting. For how to cancel copy jobs, see "Canceling Copy Jobs," on p. 4-5.

**2** Press [◄−] or [+►] to select the paper size same as paper loaded into the machine, then press [OK].

```
PAPER SIZE
                    LTR
```

**3** Press [Stop/Reset] to return to the standby mode.

- Now ready to copy your document.
- For a fax job or report printing, go to the next step.

**4** Press [OK] to resume the job.

No further operation is required.

# If a Power Failure Occurs

**If a power failure occurs, you cannot copy, scan, or print documents.**

● For fax operations in a power failure

**– You cannot send and receive documents.**

**– Depending on your telephone, you may not be able to make telephone calls.**

**– You can receive telephone calls from the telephone connected to the machine.**

**Even if power is suddenly lost due to a power failure or accidental unplugging, any sent or received documents stored in memory are backed up for about 5 minutes. However, after this period of time, the machine may lose any data stored in the memory. If this happens, the display shows <LOST IMAGE> when power is restored and automatically prints a Lost Report (unless the cartridge is empty or there is no paper in the machine) that lists the documents (received in the last 60 transactions) that were lost from memory as a result of the power cut.**

# If You Cannot Solve a Problem

**This section describes the customer support services.**

## Customer Support (U.S.A.)

If you cannot solve the problem after having referred to the information in this chapter, contact Canon Customer Care Center at 1-800-OK-CANON Monday through Friday between the hours of 8:00 A.M. to 8:00 P.M. EST. On-line support is also available 24 hours a day at the website http://www.canontechsupport.com.

## Customer Support (Canada)

Canon Canada Inc., offers a full range of customer technical support options*:

* Support program specifics are subject to change without notice."

- For step-by-step troubleshooting, e-mail technical support, the latest driver or document downloads, and answers to frequently asked questions, visit http://www.canon.ca/
- Free live technical support 9 A.M. to 8 P.M. EST Monday through Friday (excluding holidays) for products still under warranty 1-800-652-2666
- For the location of the authorized service facility nearest you, visit http://www.canon.ca/ or 1-800-652-2666
- If the problem cannot be corrected by using one of the above technical support options, repair options are available at the time of your call to the live technical support number above or via the website at http://www.canon.ca/

  * Support program specifics are subject to change without notice.

Please have the following information ready when you contact Canon:

- Product name (imageCLASS MF4380dn/imageCLASS MF4370dn/imageCLASS MF4350d)
- Serial number (on the label located inside top of the front cover)
- Place of purchase
- Nature of problem
- Steps you have taken to solve the problem and the results

**CAUTION**

If the machine makes strange noises, emits smoke or odd odor, turn OFF the main power switch immediately, disconnect the power cord, and contact Canon Customer Care Center. Do not attempt to disassemble or repair the machine yourself.

**NOTE**

Attempting to repair the machine yourself may void the limited warranty.

# Machine Settings

Chapter 12

**This chapter describes how to change and check the machine settings.**


**Machine Settings .....12-2**
Printing USER DATA LIST .....12-2
Accessing the Setting Menu .....12-2
**Setting Menu .....12-3**
VOLUME CONTROL SETTINGS.....12-3
BROADCAST.....12-3
COMMON SETTINGS.....12-3
COPY SETTINGS.....12-4
FAX SETTINGS.....12-5
ADDRESS BOOK SET.....12-6
PRINTER SETTINGS .....12-6
TIMER SETTINGS.....12-7
ADJUST./CLEANING.....12-8
REPORT SETTINGS .....12-8
SYSTEM SETTINGS .....12-9

# Machine Settings

**You can adjust the machine settings from the Setting Menu to customize the way the machine works.**

## Printing USER DATA LIST

To see the list of current settings, print out USER DATA LIST.

**1** Press ◯ [Report] repeatedly to select <USER DATA LIST>, then press [OK].

```
USER DATA LIST
```

USER DATA LIST will be printed.

## Accessing the Setting Menu

To access the setting menu, follow the procedures bellow.

**1** Press ⊛ [Menu].

**2** Press [◄−] or [+►] to select the menu you want to access, then press [OK].

```
MENU
1  VOLUME CONTROL
```

- <VOLUME CONTROL>
- <BROADCAST>
- <COMMON SETTINGS>
- <COPY SETTINGS>
- <FAX SETTINGS>
- <ADDRESS BOOK SET.>
- <PRINTER SETTINGS>
- <TIMER SETTINGS>
- <ADJUST./CLEANING>
- <REPORT SETTINGS>
- <SYSTEM SETTINGS>

**3** Press [◄−] or [+►] to select a submenu, then press [OK].

```
VOLUME CONTROL
1  MONITOR VOLUME
```

For details on the submenu, see "Setting Menu," on p. 12-3.

**4** To register the settings or go to a submenu item, press [OK].

**5** When finished, press ⊘ [Stop/Reset] to return to the standby mode.

**NOTE**

- If you press ⊘ [Stop/Reset] before pressing [OK], the setting will not be registered.
- Press ⊛ [Menu] to return to the previous display.

# Setting Menu

**The default settings are indicated in bold text.**

**NOTE**

- Depending on the country of purchase, some settings may not be available.
- The menus described in this section are based on the MF4370dn. Depending on the model of your machine, some settings may not be available and the number on the top of each menu may vary.

## VOLUME CONTROL SETTINGS

| Item | Settings | Applicable Page |
|---|---|---|
| 1 MONITOR VOLUME | (0–3) (**2**) | e-Manual "Introduction of the Machine" |
| 2 CALLING TONE | (0–3) (**2**) | |
| 3 ENTRY TONE | (0–3) (**2**) | |
| 4 ERROR TONE | (0–3) (**2**) | |

## BROADCAST

| Item | Settings | Applicable Page |
|---|---|---|
| NO.0##= | Maximum 124 recipients | p. 5-21 |

## COMMON SETTINGS

| Item | Settings | Applicable Page |
|---|---|---|
| 1 INITIAL FUNCTION | – **COPY**<br>– FAX<br>– SCAN | e-Manual "Introduction of the Machine" |
| 2 TONER SAVER MODE | – **OFF**<br>– ON | |
| 3 DISPLAY LANGUAGE | – **ENGLISH**<br>– FRENCH<br>– SPANISH<br>– PORTUGUESE | |

## COPY SETTINGS

| Item | Settings | Applicable Page |
|---|---|---|
| 1 STANDARD SETTINGS | | |
| 1 IMAGE QUALITY | – **TEXT/PHOTO**<br>– TEXT<br>– PHOTO<br>– TEXT/PHOTO+ | p. 4-23 |
| 2 DENSITY | – AUTO<br>– **MANUAL** (1–9 (**5**)) | |
| 3 ZOOM RATIO | | |
| PRESET RATIO | – 200% MAX.<br>– 129% STMT → LTR<br>– **100%**<br>– 78% LGL → LTR<br>– 64%<br>– 50% MIN. | |
| MANUAL | 1 % increments. (50–200% (**100%**)) | |
| 4 AUTO COLLATE | – **OFF**<br>– ON | |
| 5 2-SIDED | – **2-SIDED OFF**<br>– 1 > 2-SIDED:<br>• TYPE OF OUTPUT (BOOK TYPE, CALENDAR TYPE)<br>– 2 > SIDED*:<br>• TYPE OF ORIGINAL (BOOK TYPE, CALENDAR TYPE)<br>• TYPE OF OUTPUT (BOOK TYPE, CALENDAR TYPE)<br>– 2 > 1-SIDED*:<br>• TYPE OF ORIGINAL (BOOK TYPE, CALENDAR TYPE) | |
| 2 PAPER SIZE GROUP | – **INCHES**<br>– A<br>– AB | p. 4-22 |

* MF4380dn only

# FAX SETTINGS

| Item | Settings | Applicable Page |
|---|---|---|
| 1 RX MODE | | p. 5-4 |
| FAX/TEL | | p. 5-10 |
| 1 RING START TIME | 4–30SEC (**6SEC**) | |
| 2 F/T RING TIME | 10–45SEC (**22SEC**) | |
| 3 F/T SWITCH ACTION | – **RECEIVE**<br>– DISCONNECT | |
| MANUAL | | |
| **FaxOnly** | | |
| AnsMode | | |
| DRPD | – **NORMAL RING**<br>– DOUBLE RING<br>– SHORT-SHORT-LONG<br>– SHORT-LONG-SHORT<br>– OTHER RING TYPE | |
| 2 USER SETTINGS | | |
| 1 UNIT TELEPHONE # | Maximum 20 digits | p. 5-12 |
| 2 UNIT NAME | Maximum 32 characters | p. 5-12 |
| 3 TEL LINE TYPE | – **TOUCH TONE**<br>– ROTARY PULSE | p. 5-11 |
| 4 PUBLIC LINE | – **DIRECT**<br>– ADAPTER 1<br>– ADAPTER 2 | p. 5-10 |
| 5 STANDARD SETTINGS | | |
| 1 DENSITY | 1–9 (**5**) | p. 5-29 |
| 2 IMAGE QUALITY | – **STANDARD**<br>– FINE<br>– PHOTO<br>– SUPER FINE | |
| 3 TX SETTINGS | | |
| 1 AUTO REDIAL | – OFF<br>– **ON** | p. 5-26 |
| REDIAL TIMES | 1–10TIMES (**2TIMES**) | |
| REDIAL INTERVAL | 2–99MIN. (**2MIN.**) | |
| 2 DIALING LINE CHCK | – **OFF**<br>– ON | p. 5-28 |
| 4 RX SETTINGS | | |
| 1 INCOMING RING | – OFF<br>– **ON** | p. 5-35 |
| RING COUNT | 1–16TIMES (**2TIMES**) | |

| Item | Settings | Applicable Page |
|---|---|---|
| 2 REMOTE RX | – **OFF**<br>– ON | p. 5-36 |
| REMOTE RX ID | 00–99 (**25**) | |
| 3 RX PRINT | – **MEMORY RX**<br>– PRINT RX | p. 5-38 |
| 4 RX TERMINAL ID | – **OFF**<br>– ON | p. 5-33 |
| 5 RX RESTRICTION | – **OFF**<br>– ON | p. 5-39 |
| 5 PRINTER SETTINGS | | |
| 1 RX REDUCTION | – OFF<br>– **ON**<br>– CUT | p. 5-32 |
| 2 2-SIDED PRINT | – **OFF**<br>– ON | p. 5-31 |
| 3 CONT. PRINTING | – **OFF**<br>– ON | p. 5-34 |

## ADDRESS BOOK SET.

| Item | Settings | Applicable Page |
|---|---|---|
| 1 1-TOUCH SPD DIAL | Maximum 8 recipients | p. 3-3 |
| NAME | Maximum 20 characters | |
| TELNAMBER ENTRY | Maximum 50 digits | |
| 2 CODED DIAL | Maximum 100 recipients | p. 3-6 |
| NAME | Maximum 20 characters | |
| TELNAMBER ENTRY | Maximum 50 digits | |
| 3 GROUP DIAL | Maximum 8 groups | p. 3-9 |
| NAME | Maximum 20 characters | |
| NO.0##= | Maximum 50 recipients × 8 groups | |

## PRINTER SETTINGS

| Setting Item | Description | Applicable Page |
|---|---|---|
| 1 ERROR TIME OUT | – OFF<br>– **ON** (5 – 300SEC (**15SEC**)) | e-Manual<br>“Print” |

## TIMER SETTINGS

| Item | Settings | Applicable Page |
|---|---|---|
| 1 DATE&TIME SETTING | – HOUR (00–23)<br>– MINUTE (00–59)<br>– MONTH (01–12)<br>– DAY (01–28, 29, 30, 31)<br>– YEAR (00–99) | p. 5-11 |
| 2 DATE TYPE SELECT | – **MM/DD/YYYY**<br>– DD/MM YYYY<br>– YYYY MM/DD | e-Manual<br>"Setting Up the Machine" |
| 3 AUTO SLEEP | – OFF<br>– **ON** (3 – 30MIN. (**5MIN.**)) | p. 1-16 |
| 4 DAYLIGHT SV.TIME | – **OFF**<br>– ON | p. 1-17 |
| 1 START DATE/TIME | – 1 MONTH (JANUARY, FEBRUARY, **MARCH**, APRIL, MAY, JUNE, JULY, AUGUST, SEPTEMBER, OCTOBER, NOVEMBER, DECEMBER)<br>– 2 WEEK (FIRST WEEK, **SECOND WEEK**, THIRD WEEK, FOURTH WEEK, LAST WEEK)<br>– 3 DAY (**SUNDAY**, MONDAY, TUESDAY, WEDNESDAY, THURSDAY, FRIDAY, SATURDAY) | |
| 2 END DATE/TIME | – 1 MONTH (JANUARY, FEBRUARY, MARCH, APRIL, MAY, JUNE, JULY, AUGUST, SEPTEMBER, OCTOBER, **NOVEMBER**, DECEMBER)<br>– 2 WEEK (**FIRST WEEK**, SECOND WEEK, THIRD WEEK, FOURTH WEEK, LAST WEEK)<br>– 3 DAY (**SUNDAY**, MONDAY, TUESDAY, WEDNESDAY, THURSDAY, FRIDAY, SATURDAY) | |

## ADJUST./CLEANING

| Item | Settings | Applicable Page |
|---|---|---|
| 1 FIX.UNIT CLEANING | Start cleaning. | p. 10-5 |
| 2 SPECIAL MODE T | – **OFF**<br>– ON | e-Manual<br>“Maintenance” |
| 3 SPECIAL MODE U | – **OFF**<br>– MODE1<br>– MODE2 | |
| 4 SPECIAL MODE V | – **OFF**<br>– ON | |
| 5 SPECIAL MODE Y | – **OFF**<br>– ON | |
| 6 SPECIAL MODE Z | – **OFF**<br>– ON | |

## REPORT SETTINGS

| Item | Settings | Applicable Page |
|---|---|---|
| 1 TX REPORT | – OUTPUT NO<br>– **PRINT ERROR ONLY**<br>– OUTPUT YES | e-Manual<br>“Introduction of the Machine” |
| 2 RX REPORT | – **OUTPUT NO**<br>– OUTPUT YES<br>– PRINT ERROR ONLY | |
| 3 ACTIVITY REPORT | – **OUTPUT YES**<br>– OUTPUT NO | |

## SYSTEM SETTINGS

| Item | Settings | Applicable Page |
|---|---|---|
| 1 SYS. MANAGER INFO | | e-Manual "Security" |
| 1 SYSTEM PASSWORD | Seven digits | |
| 2 DEVICE INFO | | |
| 1 DEVICE NAME | Maximum 32 characters | |
| 2 LOCATION | Maximum 32 characters | |
| 3 NETWORK SETTINGS* | | e-Manual "Network Settings (MF4380dn/MF4370dn Only)" |
| 1 TCP/IP SETTINGS | | |
| 1 IPv4 SETTINGS | | |
| 1 IP ADDRESS AUTO. | | |
| **ON** | – DHCP (**ON**/OFF)<br>– BOOTP (**OFF**/ON)<br>– RARP (**OFF**/ON) | |
| OFF | | |
| 2 IP ADDRSSS | IP address (**000.000.000.000**) | |
| 3 SUBNET MASK | (**000.000.000.000**) | |
| 4 GATEWAY ADDRESS | IP address (**000.000.000.000**) | |
| 5 SET IP ADD RANGE | | |
| **OFF** | | |
| ON | | |
| 1 IP ADDRESS 1 | | |
| 1 PERMIT/REJECT | – **REJECT**<br>– PERMIT | |
| 2 START IP ADDRESS | IP address (**000.000.000.000**) | |
| 3 END IP ADDRESS | IP address (**000.000.000.000**) | |
| 2 IP ADDRESS 2 | | |
| 1 PERMIT/REJECT | – **REJECT**<br>– PERMIT | |
| 2 START IP ADDRESS | IP address (**000.000.000.000**) | |
| 3 END IP ADDRESS | IP address (**000.000.000.000**) | |
| 3 IP ADDRESS 3 | | |
| 1 PERMIT/REJECT | – **REJECT**<br>– PERMIT | |
| 2 START IP ADDRESS | IP address (**000.000.000.000**) | |
| 3 END IP ADDRESS | IP address (**000.000.000.000**) | |

| Item | Settings | Applicable Page |
|---|---|---|
| 4 IP ADDRESS 4 | | e-Manual "Network Settings (MF4380dn/MF4370dn Only)" |
| 1 PERMIT/REJECT | – **REJECT**<br>– PERMIT | |
| 2 START IP ADDRESS | IP address (**000.000.000.000**) | |
| 3 END IP ADDRESS | IP address (**000.000.000.000**) | |
| 5 IP ADDRESS 5 | | |
| 1 PERMIT/REJECT | – **REJECT**<br>– PERMIT | |
| 2 START IP ADDRESS | IP address (**000.000.000.000**) | |
| 3 END IP ADDRESS | IP address (**000.000.000.000**) | |
| 6 IP ADDRESS 6 | | |
| 1 PERMIT/REJECT | – **REJECT**<br>– PERMIT | |
| 2 START IP ADDRESS | IP address (**000.000.000.000**) | |
| 3 END IP ADDRESS | IP address (**000.000.000.000**) | |
| 7 IP ADDRESS 7 | | |
| 1 PERMIT/REJECT | – **REJECT**<br>– PERMIT | |
| 2 START IP ADDRESS | IP address (**000.000.000.000**) | |
| 3 END IP ADDRESS | IP address (**000.000.000.000**) | |
| 8 IP ADDRESS 8 | | |
| 1 PERMIT/REJECT | – **REJECT**<br>– PERMIT | |
| 2 START IP ADDRESS | IP address (**000.000.000.000**) | |
| 3 END IP ADDRESS | IP address (**000.000.000.000**) | |
| 9 IP ADDRESS 9 | | |
| 1 PERMIT/REJECT | – **REJECT**<br>– PERMIT | |
| 2 START IP ADDRESS | IP address (**000.000.000.000**) | |
| 3 END IP ADDRESS | IP address (**000.000.000.000**) | |

| Item | Settings | Applicable Page |
|---|---|---|
| 10 IP ADDRESS 10 | | e-Manual "Network Settings (MF4380dn/MF4370dn Only)" |
| 1 PERMIT/REJECT | – **REJECT**<br>– PERMIT | |
| 2 START IP ADDRESS | IP address (**000.000.000.000**) | |
| 3 END IP ADDRESS | IP address (**000.000.000.000**) | |
| 6 DNS SETTINGS | | |
| 1 DNS SERVER SET | | |
| 1 PRIM. DNS SERVER | IP address (**000.000.000.000**) | |
| 2 SECOND DNS SERVER | IP address (**000.000.000.000**) | |
| 2 HOST/DOMAIN NAME | | |
| 1 HOST NAME | Maximum 47 characters | |
| 2 DOMAIN NAME | Maximum 47 characters | |
| 3 DNS DYNAMIC SET | | |
| 1 DNS DYNA. UPDATE | – **OFF**<br>– ON | |
| 2 IPv6 SETTINGS | | |
| 1 USE IPv6 | – **OFF**<br>– ON | |
| 2 STATELESS ADD SET | – **OFF**<br>– ON | |
| 3 MANUAL ADD SET | | |
| 1 USE MANUAL ADD | – **OFF**<br>– ON | |
| 2 MANUAL ADDRESS | IP address (**0000:0000:0000:0000:0000:0000:0000:0000**) | |
| 3 PREFIX LENGTH | 0–128 (**64**) | |
| 4 DEF. ROUTER ADD | IP address (**0000:0000:0000:0000:0000:0000:0000:0000**) | |
| 4 USE DHCPv6 | – **OFF**<br>– ON | |
| 5 PING COMMAND | IP address (**0000:0000:0000:0000:0000:0000:0000:0000**) | |

| Item | Settings | Applicable Page |
|---|---|---|
| 6 SET IP ADD RANGE | | e-Manual "Network Settings (MF4380dn/MF4370dn Only)" |
| **OFF** | | |
| ON | | |
| 1 IP ADDRESS 1 | | |
| 1 PERMIT/REJECT | – **REJECT**<br>– PERMIT | |
| 2 START IP ADDRESS | IP address (**0000:0000:0000:0000:0000:0000:0000:0000**) | |
| 3 END IP ADDRESS | IP address (**0000:0000:0000:0000:0000:0000:0000:0000**) | |
| 4 PREFIX LENGTH | – **OFF**<br>– ON (0-128 (**64**)) | |
| 2 IP ADDRESS 2 | | |
| 1 PERMIT/REJECT | – **REJECT**<br>– PERMIT | |
| 2 START IP ADDRESS | IP address (**0000:0000:0000:0000:0000:0000:0000:0000**) | |
| 3 END IP ADDRESS | IP address (**0000:0000:0000:0000:0000:0000:0000:0000**) | |
| 4 PREFIX LENGTH | – **OFF**<br>– ON (0-128 (**64**)) | |
| 3 IP ADDRESS 3 | | |
| 1 PERMIT/REJECT | – **REJECT**<br>– PERMIT | |
| 2 START IP ADDRESS | IP address (**0000:0000:0000:0000:0000:0000:0000:0000**) | |
| 3 END IP ADDRESS | IP address (**0000:0000:0000:0000:0000:0000:0000:0000**) | |
| 4 PREFIX LENGTH | – **OFF**<br>– ON (0-128 (**64**)) | |
| 4 IP ADDRESS 4 | | |
| 1 PERMIT/REJECT | – **REJECT**<br>– PERMIT | |
| 2 START IP ADDRESS | IP address (**0000:0000:0000:0000:0000:0000:0000:0000**) | |
| 3 END IP ADDRESS | IP address (**0000:0000:0000:0000:0000:0000:0000:0000**) | |
| 4 PREFIX LENGTH | – **OFF**<br>– ON (0-128 (**64**)) | |

| Item | Settings | Applicable Page |
|---|---|---|
| 5 IP ADDRESS 5 | | e-Manual "Network Settings (MF4380dn/MF4370dn Only)" |
| 1 PERMIT/REJECT | – **REJECT**<br>– PERMIT | |
| 2 START IP ADDRESS | IP address (**0000:0000:0000:0000:0000:0000:0000:0000**) | |
| 3 END IP ADDRESS | IP address (**0000:0000:0000:0000:0000:0000:0000:0000**) | |
| 4 PREFIX LENGTH | – **OFF**<br>– ON (0-128 (**64**)) | |
| 6 IP ADDRESS 6 | | |
| 1 PERMIT/REJECT | – **REJECT**<br>– PERMIT | |
| 2 START IP ADDRESS | IP address (**0000:0000:0000:0000:0000:0000:0000:0000**) | |
| 3 END IP ADDRESS | IP address (**0000:0000:0000:0000:0000:0000:0000:0000**) | |
| 4 PREFIX LENGTH | – **OFF**<br>– ON (0-128 (**64**)) | |
| 7 IP ADDRESS 7 | | |
| 1 PERMIT/REJECT | – **REJECT**<br>– PERMIT | |
| 2 START IP ADDRESS | IP address (**0000:0000:0000:0000:0000:0000:0000:0000**) | |
| 3 END IP ADDRESS | IP address (**0000:0000:0000:0000:0000:0000:0000:0000**) | |
| 4 PREFIX LENGTH | – **OFF**<br>– ON (0-128 (**64**)) | |
| 8 IP ADDRESS 8 | | |
| 1 PERMIT/REJECT | – **REJECT**<br>– PERMIT | |
| 2 START IP ADDRESS | IP address (**0000:0000:0000:0000:0000:0000:0000:0000**) | |
| 3 END IP ADDRESS | IP address (**0000:0000:0000:0000:0000:0000:0000:0000**) | |
| 4 PREFIX LENGTH | – **OFF**<br>– ON (0-128 (**64**)) | |

| Item | Settings | Applicable Page |
|---|---|---|
| 9 IP ADDRESS 9 | | e-Manual "Network Settings (MF4380dn/MF4370dn Only)" |
| 1 PERMIT/REJECT | – **REJECT**<br>– PERMIT | |
| 2 START IP ADDRESS | IP address (**0000:0000:0000:0000:0000:0000:0000:0000**) | |
| 3 END IP ADDRESS | IP address (**0000:0000:0000:0000:0000:0000:0000:0000**) | |
| 4 PREFIX LENGTH | – **OFF**<br>– ON (0-128 (**64**)) | |
| 10 IP ADDRESS 10 | | |
| 1 PERMIT/REJECT | – **REJECT**<br>– PERMIT | |
| 2 START IP ADDRESS | IP address (**0000:0000:0000:0000:0000:0000:0000:0000**) | |
| 3 END IP ADDRESS | IP address (**0000:0000:0000:0000:0000:0000:0000:0000**) | |
| 4 PREFIX LENGTH | – **OFF**<br>– ON (0-128 (**64**)) | |
| 7 DNS SETTINGS | | |
| 1 DNS SERVER SET | | |
| 1 PRIM. DNS SERVER | IP address (**0000:0000:0000:0000:0000:0000:0000:0000**) | |
| 2 SECOND DNS SERVER | IP address (**0000:0000:0000:0000:0000:0000:0000:0000**) | |
| 2 HOST/DOMAIN NAME | | |
| 1 SAME HOST/ DOMAIN | – OFF<br>– **ON** | |
| 2 HOST NAME | Maximum 47 characters (**CanonDF40DF**) | |
| 3 DOMAIN NAME | Maximum 47 characters | |
| 3 DNS DYNAMIC SET | | |
| 1 DNS DYNA. UPDATE | – **OFF**<br>– ON | |
| 2 REG. MANUAL ADD | – **OFF**<br>– ON | |
| 3 REG. STATEFUL ADD | – **OFF**<br>– ON | |
| 3 LPD PRINT | – OFF<br>– **ON** | |
| 4 RAW PRINT | – OFF<br>– **ON** | |

| Item | Settings | Applicable Page |
|---|---|---|
| 5 Bonjour SETTINGS | – OFF<br>– **ON** | e-Manual<br>"Network Settings (MF4380dn/MF4370dn Only)" |
| 1 Bonjour NAME | Maximum 63 digits (**Canon MF4360-4390(DF:40:DE)**) | |
| 2 PRIORITY PROTOCOL | – **LPR**<br>– RAW | |
| 6 USE HTTP | – OFF<br>– **ON** | |
| 7 PORT NO. SET. | – 1 LPD (0–65535 (**515**))<br>– 2 RAW (0–65535 (**9100**))<br>– 3 HTTP (0–65535 (**80**))<br>– 4 SNMP (0–65535 (**161**)) | |
| 8 PERMIT RX MAC ADD | | |
| ON | – 1 PERMIT RX ADD1 (**00-00-00-00-00-00**)<br>– 2 PERMIT RX ADD2 (**00-00-00-00-00-00**)<br>– 3 PERMIT RX ADD3 (**00-00-00-00-00-00**)<br>– 4 PERMIT RX ADD4 (**00-00-00-00-00-00**)<br>– 5 PERMIT RX ADD5 (**00-00-00-00-00-00**) | |
| **OFF** | | |
| 2 SNMP SETTINGS | | |
| 1 USE SNMP | – OFF<br>– **ON** | |
| 2 COMMUNITY NAME 1 | Maximum 15 characters (**public**) | |
| 3 COMMUNITY NAME 2 | Maximum 15 characters | |
| 4 SNMP WRITABLE 1 | – OFF<br>– **ON** | |
| 5 SNMP WRITABLE 2 | – **OFF**<br>– ON | |
| 3 ETHERNET DRIVER | | |
| 1 AUTO DETECT | – **AUTO**<br>– MANUAL | |
| 1 COMMUNICATN MODE | – HALF DUPLEX<br>– **FULL DUPLEX** | |
| 2 ETHERNET TYPE | – 10 BASE-T<br>– **100 BASE-TX** | |
| 2 MAC ADDRESS | Mac address | |

| Item | Settings | Applicable Page |
|---|---|---|
| 4 VIEW IP ADDRSSS | | e-Manual "Network Settings (MF4380dn/MF4370dn Only)" |
| 1 IPv4 | – 1 IP ADDRESS<br>– 2 SUBNET MASK<br>– 3 GATEWAY ADDRESS | |
| 2 IPv6 | – 1 LINK LOCAD ADD (IP ADDRESS, PREFIX LENGTH)<br>– 2 STATELESS ADD. 1 (IP ADDRESS, PREFIX LENGTH)<br>– 3 STATELESS ADD. 2 (IP ADDRESS, PREFIX LENGTH)<br>– 4 STATELESS ADD. 3 (IP ADDRESS, PREFIX LENGTH)<br>– 5 STATELESS ADD. 4 (IP ADDRESS, PREFIX LENGTH)<br>– 6 STATELESS ADD. 5 (IP ADDRESS, PREFIX LENGTH)<br>– 7 STATELESS ADD. 6 (IP ADDRESS, PREFIX LENGTH)<br>– 8 STATEFUL ADDRESS (IP ADDRESS, PREFIX LENGTH)<br>– 9 DEF. ROUTER ADD (IP ADDRESS) | |
| 5 STARTUP TIME SET. | 0–300SEC (**0SEC**) | |
| 4 COMMUNICATIONS | | |
| 1 TX START SPEED | 2400bps, 4800bps, 7200bps, 9600bps, 14400bps, **33600bps** | |
| 2 RX START SPEED | 2400bps, 4800bps, 7200bps, 9600bps, 14400bps, **33600bps** | |
| 3 MEMORY LOCK | – **OFF**<br>– ON | |
| 1 PASSWORD | Seven digits | |
| 2 MEMORY RX TIME | – **OFF**<br>– ON | |
| MEM. RX START TIME | – HOUR (00–23)<br>– MINUTE (00–59) | |
| MEM. RX END TIME | – HOUR (00–23)<br>– MINUTE (00–59) | |
| 5 ACCESS TO DEST. | | e-Manual "Security" |
| 1 RESTRICT REDIAL | – **OFF**<br>– ON | |
| 2 CONFIRM FAX NO. | – **OFF**<br>– ON | |
| 6 PDL SELECT (PnP) | – **UFRII**<br>– UFRII (XPS) | p. 6-4 |

| Item | Settings | Applicable Page |
|---|---|---|
| 7 UPDATE FIRMWARE | This function is only used when the firmware needs to be updated. | |

* MF4380dn/MF4370dn only

# Appendix

Chapter 13

**Specifications.....13-2**
General.....13-2
Copier.....13-3
Printer.....13-3
Scanner (Scanning via USB).....13-3
Scanner (Scanning via Network).....13-3
Facsimile.....13-4
Telephone.....13-4
**Index.....13-5**

# Specifications

| General | |
|---|---|
| **Type** | Personal Desktop |
| **Power Source** | 120–127 V, 60 Hz (Power requirements differ depending on the country in which you purchased the product.) |
| **Power Consumption** | MF4380dn<br>Maximum: Less than 630 W<br>MF4370dn/MF4350d<br>Maximum: Less than 620 W |
| **Warm-up Time** | MF4380dn/MF4370dn: Less than 12.0 sec.*<br>MF4350d: Less than 10.0 sec.*<br>(temperature: 68°F (20°C), humidity: 65%; from when the machine turns on the power main switch until the standby display appears)<br>* Warm-up time may differ depending on the condition and environment of the machine. |
| **Weight** | MF4380dn: Approx. 32.0 lb (14.5 kg) (including toner cartridge)<br>MF4370dn: Approx. 29.1 lb (13.2 kg) (including toner cartridge)<br>MF4350d: Approx. 29.5 lb (13.4 kg) (including toner cartridge) |
| **Dimensions** | MF4380dn: 14 3/8" (H) × 18 7/8" (D) × 15 3/8" (W) (363 mm (H) × 465 mm (D) × 390 mm (W))<br>(with the document feeder tray and the paper cassette attached)<br>MF4370dn: 18" (H) × 17 1/2" (D) × 15 3/8" (W) (455 mm (H) × 442 mm (D) × 390 mm (W))<br>(with the document feeder tray and the paper cassette attached)<br>MF4350d: 18" (H) × 17 3/4" (D) × 15 3/8" (W) (455 mm (H) × 450 mm (D) × 390 mm (W))<br>(with the document feeder tray attached) |
| **Installation Space** | MF4380dn<br>43 1/8" (D) × 24 3/4" (W) (1093 mm (D) × 627 mm (W))<br>MF4370dn/MF4350d<br>39 7/8" (D) × 23 1/4" (W) (1013 mm (D) × 590 mm (W)) |
| **Environmental Conditions** | Temperature: 50°F–86°F (10.0°C–30.0°C)<br>Humidity: 20%–80% RH (no condensation) |
| **Display Languages** | ENGLISH/FRENCH/SPANISH/PORTUGUESE |
| **Acceptable Documents** | » p. 2-2 |
| **Acceptable Paper Stock** | » p. 2-6 |
| **Printable Area** | » p. 2-7 |
| **Scanning Area** | » p. 2-3 |

## Copier

| | |
|---|---|
| **Scanning Resolution** | TEXT/PHOTO mode: 300 dpi × 300 dpi<br>TEXT mode, PHOTO mode, TEXT/PHOTO+ mode: 600 dpi × 600 dpi |
| **Printing Resolution** | 600 dpi × 600 dpi |
| **Magnification** | 1:1 ± 1.0%, 1:2.00, 1:1.29, 1:0.78, 1:0.64, 1:0.50<br>Zoom 0.50–2.00, 1% increments |
| **First Copy Time** | Platen glass: less than 9.00 sec. (LTR) |
| **Copy Speed** | Direct: 23 cpm (LTR) |
| **No. of Copies** | Maximum 99 copies |

## Printer

| | |
|---|---|
| **Printing Method** | Indirect electrostatic method (On-demand fixing) |
| **Paper Handling** | Paper cassette: 250 sheets (Height: maximum 1" (25 mm))<br>Multi-purpose tray: 1 sheet |
| **Paper Delivery** | 100 sheets (17 to 21 lb (64 to 80 g/m$^2$)) |
| **Print Speed** | Direct: 23 ppm (LTR) |
| **Printing Resolution** | 600 dpi × 600 dpi |
| **Number of Tones** | 256 |
| **Toner Cartridge** | » p. 1-11 |

## Scanner (Scanning via USB)

| | |
|---|---|
| **Type** | Color scanner |
| **Maximum Scanning Size** | 8 1/2" × 14" (216 mm × 356 mm) |
| **Scanning Resolution** | 600 × 1200 dpi (optical)<br>9600 × 9600 dpi (enhanced) |
| **Scanning Speed** | Color: 4.5 msec/line (600 dpi)<br>Grayscale: 1.5 msec/line (600 dpi) |
| **Host Interface** | USB 1.1, USB 2.0 |
| **System Requirements** | Windows 2000/XP/Vista/7 |
| **Device Driver** | TWAIN and WIA 1.0* (Windows XP/Vista/7 only) compliant<br>* WIA 2.0 is not supported. |

## Scanner (Scanning via Network)

| | |
|---|---|
| **Type** | Color scanner |
| **Maximum Scanning Size** | 8 1/2" × 14" (216 mm × 356 mm) |
| **Scanning Resolution** | 75 dpi, 100 dpi, 150 dpi, 200 dpi, 300 dpi |
| **Scanning Speed** | Color: 2.25 msec/line (300 dpi)<br>Grayscale: 0.75 msec/line (300 dpi) |

## Scanner (Scanning via Network)

| | |
|---|---|
| **Host Interface** | 100Base-TX/10Base-T |
| **System Requirements** | Windows 2000/XP/Server 2003/Vista/7/Server 2008 |
| **Device Driver** | TWAIN |

## Facsimile

| | |
|---|---|
| **Applicable Line** | Public Switched Telephone Network (PSTN)*1 |
| **Compatibility** | G3 |
| **Data Compression Schemes** | MH, MR, MMR |
| **Modem Speed** | 33.6 Kbps<br>Automatic fallback |
| **Transmission Speed** | Approx. 3 seconds/page*2 at 33.6 Kbps, ECM-MMR, transmitting from memory |
| **Transmission/Reception Memory** | Maximum approx. 256 pages*2<br>(total pages of transmission/reception) |
| **Fax Resolution** | STANDARD: 203 pels/inch × 98 lines/inch (8 pels/mm × 3.85 lines/mm)<br>FINE: 203 pels/inch × 196 lines/inch (8 pels/mm × 7.7 lines/mm)<br>PHOTO: 203 pels/inch × 196 lines/inch (8 pels/mm × 7.7 lines/mm)<br>SUPER FINE: 203 pels/inch × 392 lines/inch (8 pels/mm × 15.4lines/mm) |
| **Dialing** | – Speed dialing<br>One-touch speed dialing (8 destinations)<br>Coded speed dialing (100 destinations)<br>Group dialing (8 × 50 recipients)<br>Address Book dialing (with Address Book key)<br>– Regular dialing (with numeric keys)<br>– Automatic redialing<br>– Manual redialing (with Redial/Pause key)<br>– Sequential broadcast (124 destinations) |
| **Receiving** | – Automatic reception<br>– Remote reception by telephone (Default ID: 25) |
| **Report** | – ACTIVITY REPORT (after every 60 transactions)<br>– TX (Transmission)/RX (Reception) REPORT<br>– TTI (Transmit Terminal Identification) |

*1 The Public Switched Telephone Network (PSTN) currently supports 28.8 Kbps modem speed or lower, depending on telephone line conditions.

*2 Based on ITU-T Standard Chart No. 1, MMR standard mode.

## Telephone

| | |
|---|---|
| **Connection** | External telephone/external telephone with built in answering machine/data modem |

**NOTE**

Specifications are subject to change without notice.

# Index


## Symbols

2-sided copying 4-18

2-Sided key 1-8

2-sided printing 6-10

## A

Address Book key 1-9
- Using 5-20

ADF 1-3

AnsMode 5-7

## B

Basic receiving method 5-4

Basic sending method
- Fax 5-13
- PC fax 5-16

Broadcasting 5-21

## C

Canceling
- Copy job 4-5
- Fax job 5-17
- Print job 6-11
- Scan job 7-5

Checking
- Documents stored in memory 5-45, 5-46
- Print job 6-11
- Reception/Transmission results 5-46

Cleaning
- ADF 10-7
- Exterior 10-2
- Fuser Roller 10-5
- Interior 10-2
- Platen Glass 10-6
- Scanning Area 10-6

Clearing jams 11-2
- Document jams 11-2
- Paper jams 11-5

Clear key 1-8

Coded dial codes
- Editing 3-6
- Erasing 3-7
- Registering 3-6
- Using 5-19

Coded Dial key 1-9

Collate/2 on 1 key 1-8

Collating Copies 4-13

Copying 4-1

COPY key 1-8

Customer support
- Canada xiv, 11-22
- U.S.A. xiv, 11-22

## D

Daylight saving time 1-17

Deleting
- Documents stored in memory 5-45, 5-46

Density
- Copying 4-8
- Faxes 5-23

Density key 1-8

Display 1-8
- Messages 11-16
- Standby mode 1-10

Document
- Copying 4-4
- Jams 11-2
- Placing 2-4
- Receiving 5-4
- Requirements 2-2
- Scanning area 2-3
- Sending 5-13

Document delivery tray 1-3

Document feeder tray 1-3

Documents stored in memory
- Checking 5-45, 5-46
- Deleting 5-45, 5-46

DRPD 5-9

Dust cover 1-3

**E**

Energy Saver key 1-8

Enlarge/Reduce key 1-8

Error codes 11-19

Error indicator 1-8

**F**

FAX/TEL 5-6

FAX key 1-8

**G**

Group address
- Adding destination 3-10
- Changing group name 3-11
- Deleting destination 3-10
- Deleting group 3-11
- Registering 3-9
- Using 5-20

**H**

Handling xi

Hook key 1-9

**I**

If a power failure occurs 11-21

If you cannot solve a problem 11-22

Image quality
- Copying 4-6
- Faxes 5-24

Image Quality key 1-8

**J**

Jams
- Document 11-2
- Paper 11-5

Job Cancel/Status Monitor key 1-8

**L**

Location xii

**M**

Main power switch 1-3

Maintenance xi
- Redistributing Toner 10-10
- Replacing the Toner Cartridge 10-12
- When a Message Appears 10-9

MANUAL 5-8

Manual reception 5-8

Manual sending 5-13

Memory lock reception 5-41

Menu key 1-8

Multi-purpose tray 1-3

**N**

Numeric keys 1-8

## O

OK key 1-8

One-touch key
- Editing 3-3
- Erasing 3-4
- Registering 3-3
- Using 5-19

One-touch keys 1-9

Operation panel 1-3
- Fax operation panel 1-9
- Main operation panel 1-7

Output tray 1-3

Output tray extension 1-3

Overview
- Machine functions ii

## P

Paper
- Jams 11-5
- Loading 2-8
- Printable area 2-7
- Requirements 2-6

Paper cassette 1-3

Paper guide rail 1-3

Paper Settings key 1-8

Paper Size and type 2-14

Paper stopper 1-3

Platen glass 1-3

Power socket 1-6

Power supply xiv

Printable area 2-7

Printing 6-1

Processing/Data indicator 1-8

## R

Rear cover 1-6

Receive mode
- AnsMode 5-7
- DRPD 5-9
- FAX/TEL 5-6
- FaxOnly 5-5
- MANUAL 5-8

Receive mode for printing 5-38

Redial/Pause key 1-9

Remote RX 5-36

Report key 1-8

## S

SCAN key 1-8

Scanning area 1-3, 2-3

Scanning platform 1-3

Sleep mode 1-16

Slide guides 1-3

Slide guides for multi-purpose tray 1-3

Specifications
- Copier 13-3
- Facsimile 13-4
- General 13-2
- Printer 13-3
- Scanner (scanning via network) 13-3
- Scanner (scanning via USB) 13-3
- Telephone 13-4

Specifying destinations 5-18

Start key 1-8

Stop/Reset key 1-8

## T

Telephone line jack 1-6

Tone key 1-8

Toner cartridge
- Checking the toner level 1-12
- Maintaining 1-12
- Redisributing 10-10
- Replacing 10-12

Transporting the Machine 10-23

Troubleshooting

Clearing jams 11-2
Error codes 11-19
Error messages 11-16
If a power failure occurs 11-21
If you cannot solve a problem 11-22

## U

USB port 1-6

## Z

Zoom ratio

Custom copy ratio 4-11
Preset zoom 4-10

**CANON INC.**
30-2, Shimomaruko 3-chome, Ohta-ku, Tokyo 146-8501, Japan

**CANON MARKETING JAPAN INC.**
16-6, Konan 2-chome, Minato-ku, Tokyo 108-8011, Japan

**CANON U.S.A., INC.**
One Canon Plaza, Lake Success, NY 11042, U.S.A.

**CANON EUROPA N.V.**
Bovenkerkerweg, 59-61, 1185 XB Amstelveen, The Netherlands

**CANON CHINA CO. LTD.**
15F Jinbao Building No.89, Jinbao Street, Dongcheng District, Beijing 100005, PRC

**CANON SINGAPORE PTE LTD**
1 HarbourFront Avenue, #04-01 Keppel Bay Tower, Singapore 098632

**CANON AUSTRALIA PTY LTD**
1 Thomas Holt Drive, North Ryde, Sydney NSW 2113, Australia

**CANON GLOBAL WORLDWIDE SITES**
http://www.canon.com/

**120V**

FT5-3046 (010) xxxxxxxxxx
© CANON INC. 2010
PRINTED IN KOREA