Canon

imageRUNNER
ADVANCE
C2030/C2030H/C2025H
C2020/C2020H

Basic Operation Guide

After you finish reading this guide, store it in a safe place for future reference.

ENG

How To Use This Manual

This manual describes the following functions, operations, and maintenance procedures.

- Functions that can be operated from the touch panel display of the machine
- Remote UI functions that can operate the machine from a computer
- Printing from a computer
- Routine maintenance procedures
- Clearing paper jams/staple jams

Store this manual next to the machine so it can be used when the user encounters trouble operating the machine.

* Some functions explained in this manual may require an optional product(s).

* Screen shots used in this manual may differ from the ones you actually see.

Contents

■ **Things You Can Do with This Machine** **5**

What This Machine Can Do 5
Control Panel and Touch Panel Display 7
Customizing a Function Screen 9
Changing Settings According to Your Needs 10

■ **Things You Can Do with the Copy Functions** **11**

How to Make a Copy 11
Useful Copy Functions 13

■ **Things You Can Do with the Fax Functions** **21**

Sending a Fax 21
Useful Fax Functions 23

■ **Things You Can Do with the Scan and Send Functions** **29**

Sending Scanned Documents to an E-Mail, I-Fax, and File Server 29
Useful Send Functions 31

■ **Things You Can Do with the Scan and Save Functions** **37**

Storing Scanned Data 37
Useful Scan Functions 39

■ **Things You Can Do with the Access Stored Files Functions** **43**

Accessing Stored Files 43
Useful Print Functions 45
Useful File Operation Functions 48

■ **Operating the Machine from a Computer** **49**

Remote UI 49
Printing from a Computer 51

■ **Routine Maintenance** ••••••

How To Use This Manual

Refer to the following manuals included with your machine according to your needs.

Before Using This Machine

- Describes cautions for using the machine.
- Machine specifications

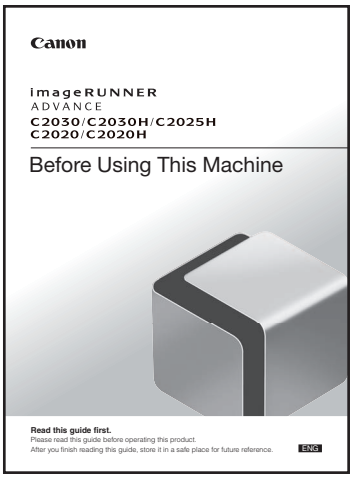

Setup Guide

- Describes the settings that should be specified first after installation of the machine.
  - Settings for using the Send function
  - Settings for using the Fax function
  - Settings for printing from computers/performing quality control

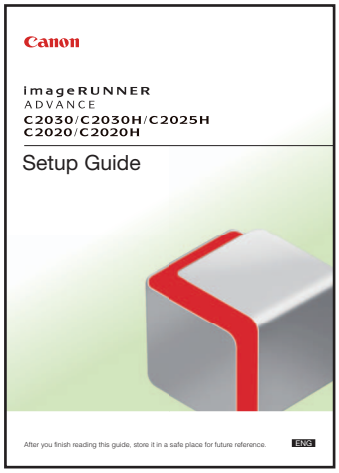

Basic Operation Guide (This Manual)

- Includes an overview of the functions of the machine.
- Describes the Copy and Fax functions in an easy to understand manner.
- Describes the maintenance procedures for the machine and how to resolve problems if they occur.
  - Loading Paper
  - Replacing toner
  - Clearing paper jams/staple jams
- Troubleshooting Q&A

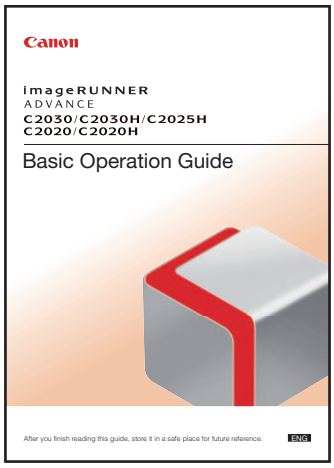

e-Manual

- Describes the method for using functions, such as the Copy and Send functions, specifying settings, and introduces optional products that you can use to enhance the use of your machine.
- Includes "Practical Workflows," which introduces functions by purpose, such as preventing unauthorized copying, etc.

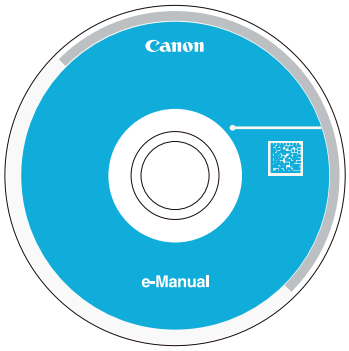

Driver Installation Guide

- Introduces Windows and Macintosh printer drivers and fax drivers, etc.
  - Printer Driver Installation Guide
  - Mac Printer Driver Installation Guide
  - Fax Driver Installation Guide
  - Mac Fax Driver Guide

Symbols Used in This Manual

The following symbols are used in this manual to explain procedures, restrictions, handling precautions, and instructions that should be observed for safety.

WARNING	Indicates a warning concerning operations that may lead to death or injury to persons if not performed correctly. To use the machine safely, always pay attention to these warnings.
CAUTION	Indicates a caution concerning operations that may lead to injury to persons if not performed correctly. To use the machine safely, always pay attention to these cautions.
IMPORTANT	Indicates operational requirements and restrictions. Be sure to read these items carefully to operate the machine correctly, and avoid damage to the machine or property.
NOTE	Indicates a clarification of an operation, or contains additional explanations for a procedure. Reading these notes is highly recommended.
	Indicates an operation that must not be performed. Read these items carefully, and make sure not to perform the described operations.

Revolutionary Documentation Work with an Evolving Multitasking Machine

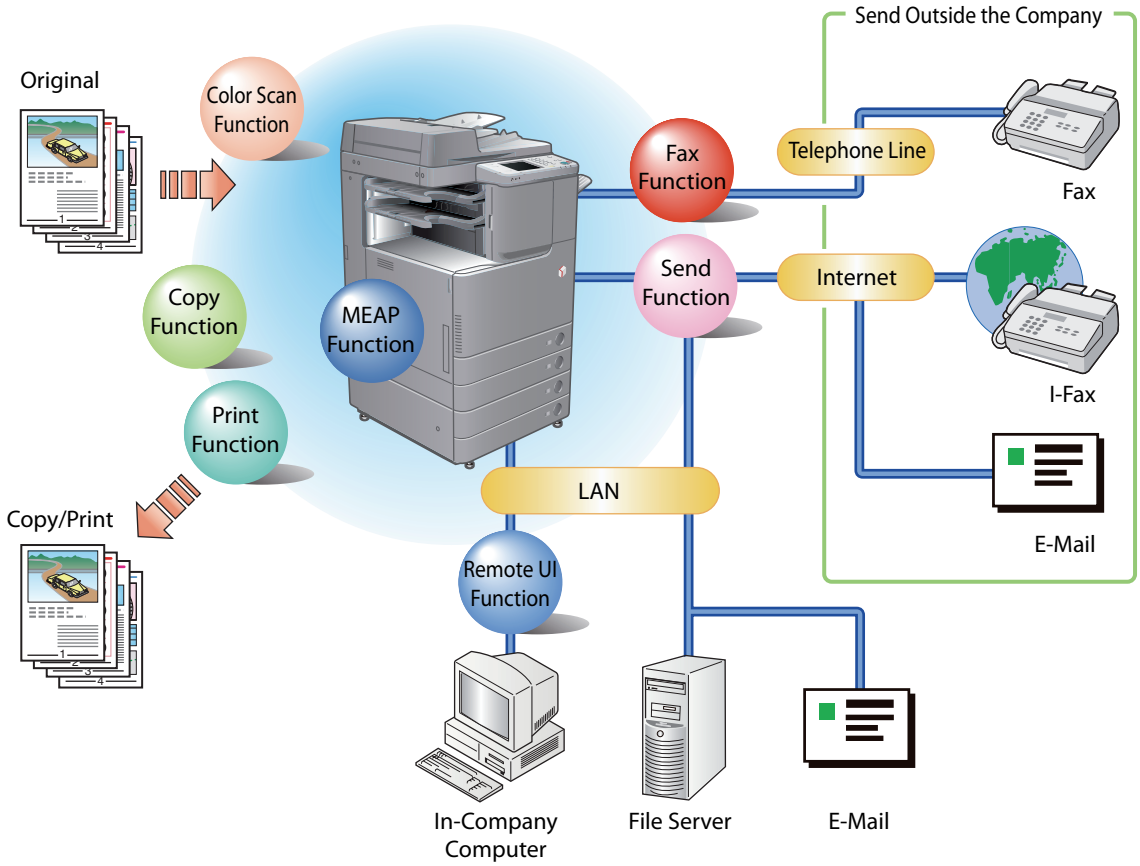

The imageRUNNER ADVANCE C2030/C2030H/C2025H/C2020/C2020H incorporates a rich array of input and output features that can greatly enhance your efficiency.
Equipped with features that meet the needs of document work in a digitized office, the imageRUNNER ADVANCE C2030/C2030H/C2025H/C2020/C2020H represents the ultimate in a color digital multitasking machines.

Copy

You can make two-sided copies from one-sided originals or copy two pages onto one side of the paper to reduce printing cost. There are other modes such as the Collate modes. (p. 11)

Fax*1

Scanned documents as well as stored files and computer data can be sent by facsimile. You can also send documents to multiple addresses and forward received facsimiles to another destination. Also, by using the Remote Fax sending function, you can share the Fax function on the same network. (p. 21)

Send Documents (E-Mail/Fax/I-Fax/File Servers)*2

You can send scanned documents by e-mail or I-fax, as well as store them on a network file server. (p. 29)

Use Memory Media

You can scan and store documents in memory media connected to the USB port on the machine. You can also print stored files directly from the memory media. (P.37, P.43)

Use Network*2

You can use the Advanced Box (*) of another imageRUNNER ADVANCE machine accessible on the network to store scanned originals and print stored files. (P.37, P.43)

* A storage location that can handle file formats that can also be used on a computer.

Use Remote Scanner

You can use this machine as a remote scanner by TWAIN compatible computer software. You can scan up to A3 in size at a resolution of 600 x 600 dpi. (See e-Manual > Scanner.)

Print Secured File*2

You can send print data protected with a PIN from a computer to the machine. This data can be printed only by entering the correct PIN on the machine. This enables you to print without unauthorized people viewing your data. (See e-Manual > Secured Print.)

Printing a Fax*1/I-Fax*2 file in the Memory RX inbox

If Memory RX is set, documents received by Fax/I-Fax function are not printed, but stored in the Memory RX Inbox. You can print the stored files whenever necessary. This can help prevent outputs being forgotten at the machine. (See e-Manual > Fax/I-Fax Inbox.)

View Web Page*1

You can use this device to browse Web pages from the touch panel display of the machine or print displayed information. (See e-Manual > Web Access.)

*1 Indicates functions, which require an optional product(s).
*2 Indicates functions, which require an optional product(s), depending on the region.

Control Panel and Touch Panel Display

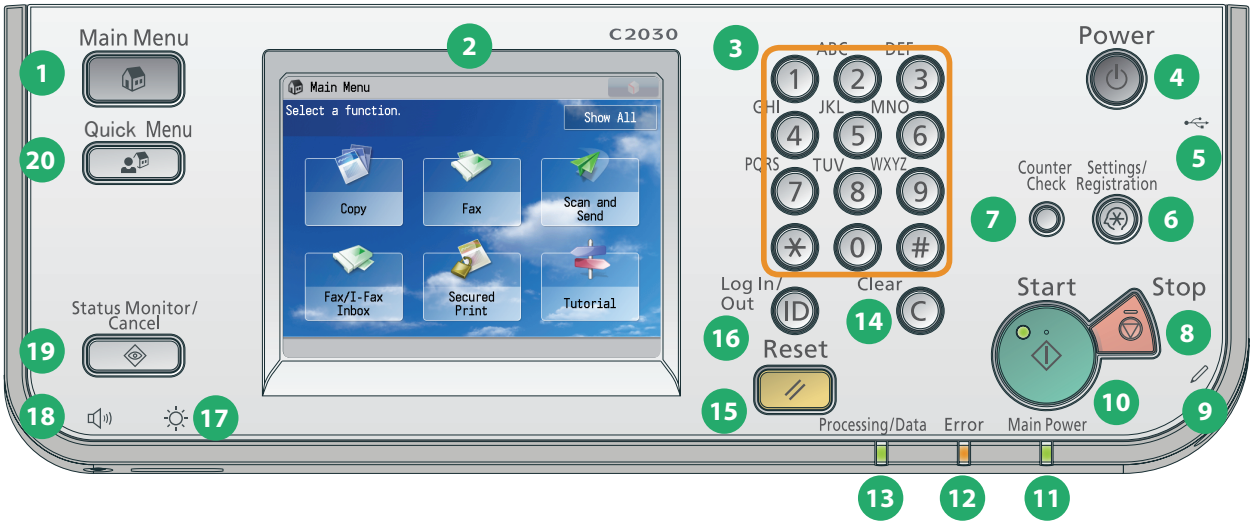

1 Main Menu key
Press to return to the Main Menu screen.

2 Touch Panel Display
The settings screen for each function is shown on this display. You can operate the machine by touching the screen. Six function keys are displayed by default.

3 Numeric keys
Press to enter numeric values.

4 Control Panel Power Switch (Sub Power Supply)
Press to set or cancel the Sleep mode.
For more information about Sleep mode, see p. 145.

5 USB Port
Port for USB memory media.

6 Settings/Registration key
Press to register or specify function settings.

7 Counter Check key
Press to display the copy and print count totals on the touch panel display.

8 Stop key
Press to stop the job in progress.

9 Edit Pen
Use to operate the touch panel display.

10 Start key
Press to start an operation.

11 Main Power Indicator
Lights when the main power is turned ON.

12 Error Indicator
Flashes or lights if there is an error in the machine.

13 Processing/Data Indicator
Flashes or blinks green when the machine is performing operations, and maintains a steady green light when I-fax or fax data is stored in memory.

14 Clear key
Press to clear entered values or characters.

15 Reset key
Press to restore the standard settings of the machine.

16 ID (Log In/Out) key
Press to log in/out when a login service is set.

17 Brightness Adjustment Dial
Use to adjust the brightness of the touch panel display.

18 Volume Settings key
Press to display the screen for adjusting settings, such as the transmission volume and fax sending/receiving alarm volume.

19 Status Monitor/Cancel key
Press to check the job status or cancel the print jobs.

20 Quick Menu key
Press to display previously registered functions.

If the touch panel display is turned OFF

If nothing appears on the touch panel display after the main power switch is turned ON, press the control panel power switch.

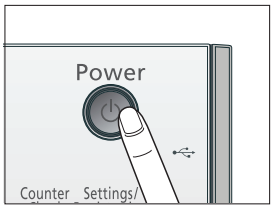

If you want to check or change the job status

Press (Status Monitor/Cancel) on the control panel to check the job status or cancel print jobs. Also, you can check the status of the machine, such as the amount of paper remaining in the paper deck.

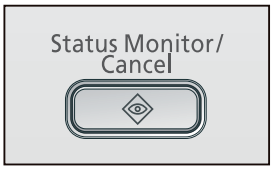

Use Quick Menu

If functions that are frequently used are set in the Quick Menu beforehand, you can recall the functions by pressing (Quick Menu). If you are using a login service, the Quick Menu screen set for each user appears. To register a function in the Quick Menu, set the function and press [Register to Quick Menu] from .

Logging In/Out

If you are managing the machine with a login service, such as Department ID Management or SSO-H (Single Sign-On H), a login screen appears. If the login screen appears, enter the Department ID and password or the user name and password → press (Log In/Out) or [Log In] on the screen. Press (Log In/Out) or [Log Out] after you finish using the machine to log out.

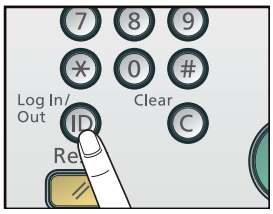

Selecting Each Function

If (Main Menu) on the control panel is pressed, the Main Menu screen is displayed. To use a function, select it from the Main Menu screen.

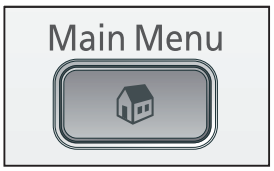

Use Help

If ? is displayed on the top right of the function setting screen, press ? to check the explanation of the function or how to specify settings.

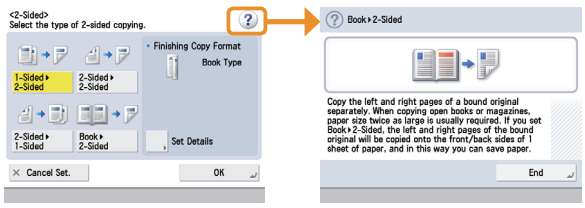

Customizing a Function Screen

You can specify settings for the displayed screen by pressing on the top right of the screen. To specify this settings, you must log in to the machine as an administrator.

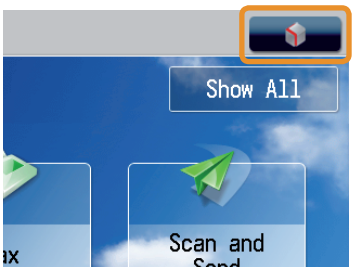

The items displayed when is pressed may differ, depending on the function.

If authentication function is used, items displayed may differ or may not be available, depending on the login user's privileges.

Change Main Menu Display

- [Main Menu Button Display Settings]
  You can set the number and layout of the buttons displayed on the Main Menu screen.
- [Main Menu Wallpaper Settings]
  You can set the wallpaper for the Main Menu screen.
- [Other Main Menu Settings]
  You can set whether the shortcut for the following modes are displayed on the Main Menu screen.
  - (Language/Keyboard Switch)
  - [Display [Settings/Reg. Shortcut]]
  - [Display [Show All]]

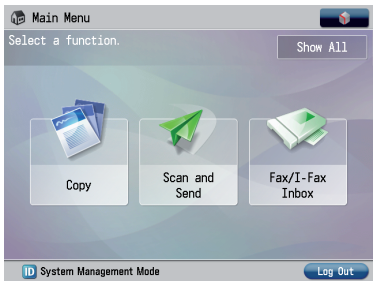

Example of the Customized Screen

Place Frequently Used Functions in a Visible Location

You can display up to two shortcut for functions on the top of the screen. To set, select [Top Buttons Settings] after pressing on the top right of the Main Menu screen.

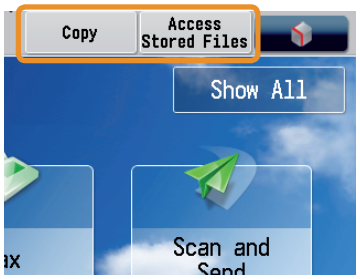

Example of Registration

Place Frequently Used Features for Easy Access

You can register shortcuts to frequently used modes in [Options] of each function (Copy, Fax, or Scan and Send). Registered shortcuts appear on the Basic Features screen for that function.

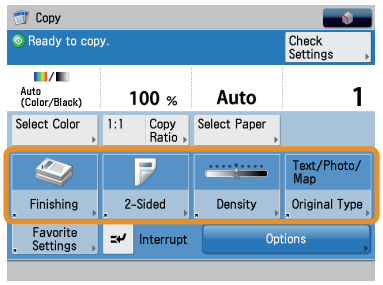

Example of Registration

Changing Settings According to Your Needs

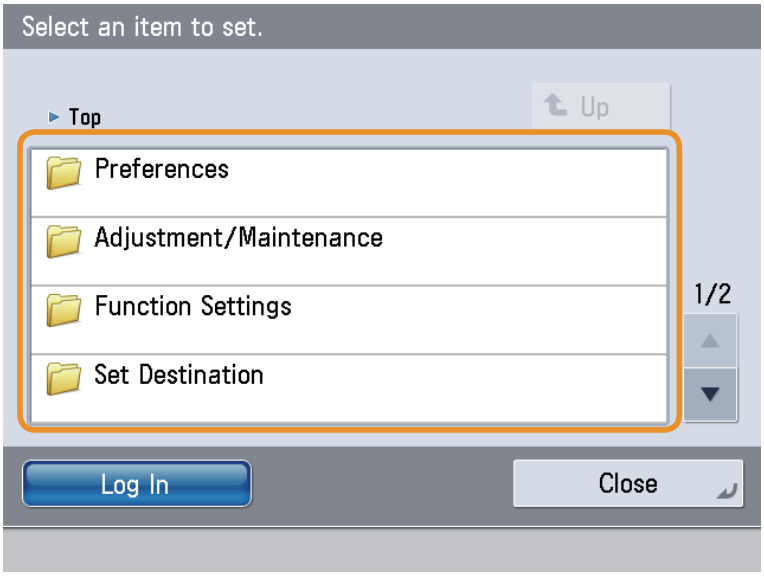

The machine provides various settings that enable you to use it more conveniently and easily. You can register or change the settings according to your needs.

Preferences

You can specify basic settings for using the machine, such as changing the paper size to load, changing the default screen to display, setting the date and time, setting the time it takes to enter the low power mode, and specifying the settings to connect to a network.

Adjustment/Maintenance

You can specify settings for using the machine more comfortably, such as adjusting the density and color balance, and cleaning the feeder.

Function Settings

You can specify and register settings for using each function more conveniently, such as registering shortcut buttons for the Copy function, setting automatic redialing for the Fax function, and setting the maximum data size to send via e-mail.

Set Destination

You can register fax and e-mail destinations in the address book. In addition to registering frequently used destinations, you can also register multiple destinations as a group, enabling you to send to those destinations at the same time. You can also register different types of destinations (e-mail and file server) as a group.

Management Settings

You can set the administrator settings for managing the machine. This enables you to set an ID and password for each department, manage confidential information, and count the number of pages printed for each ID. You can also register licenses and certificates.

How to Make a Copy

This section describes the flow of basic copy operations.

1 Placing Originals

Place the original in the feeder or the platen glass.

Placing originals in the feeder

Adjust the slide guides to fit the size of your originals. Neatly place your originals with the side to be copied face up.

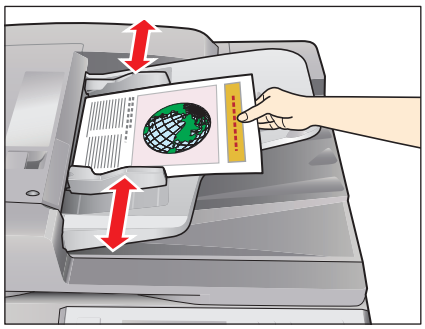

Placing originalson the platen glass

Open the feeder/platen cover.

Place your originals face down.

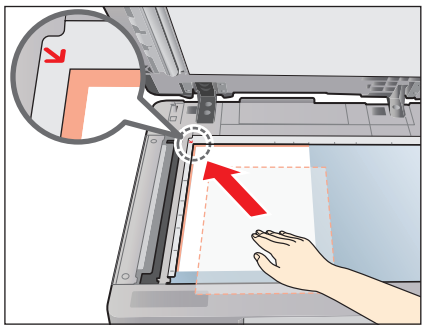

Gently close the feeder/platen cover.

2 Selecting Function

Select [Copy] from the Main Menu screen.

Press [Copy].

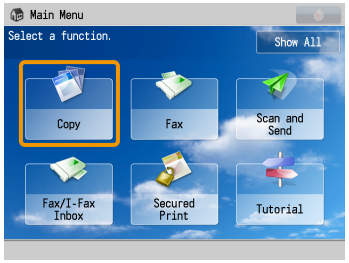

Basic Features screen for [Copy] is displayed.

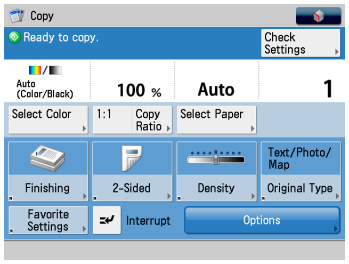

If a log in screen for Department ID Management or SSO-H appears, you must enter the applicable authentication information (ID, password/PIN). If the Card Reader-C1/Copy Card Reader-F1 is installed, first insert a control card.

You can set various copying functions. For more information, see p. 13 to p. 20 in this manual.

3 Setting the Number of Copies

Enter the number of copies.

Press the numeric keys to enter the desired copy quantity (1 to 999).

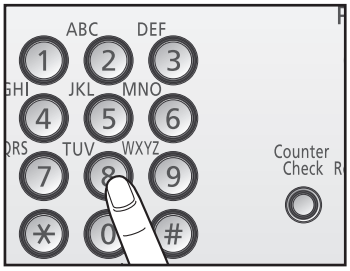

If you make a mistake when entering values, press (Clear) and enter the correct value.

The specified copy quantity appears on the screen, as shown below.

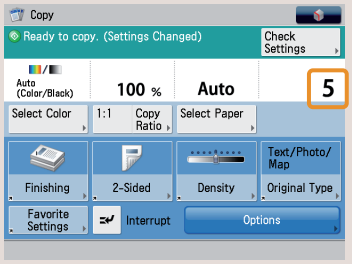

4 Start Copying

After specifying the settings, press (Start).

Press (Start).

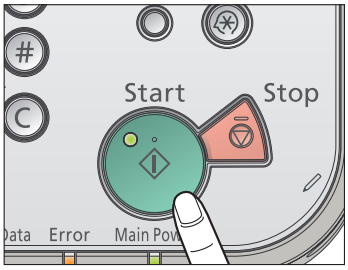

If the following screen appears, press (Start) to scan the next original. After all of the originals are scanned, press [Start Copying]

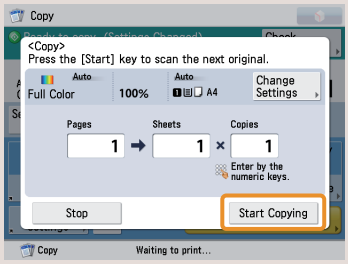

When copying is complete, remove your originals.

If a login service, such as Department ID Management or SSO-H has been set, press (Log In/Out) to log out.

Useful Copy Functions

To use Copy functions, press [Copy] on the Main Menu screen. This section describes the main functions on the Basic Features screen of the Copy function. For more information on the functions, see e-Manual > Copy.

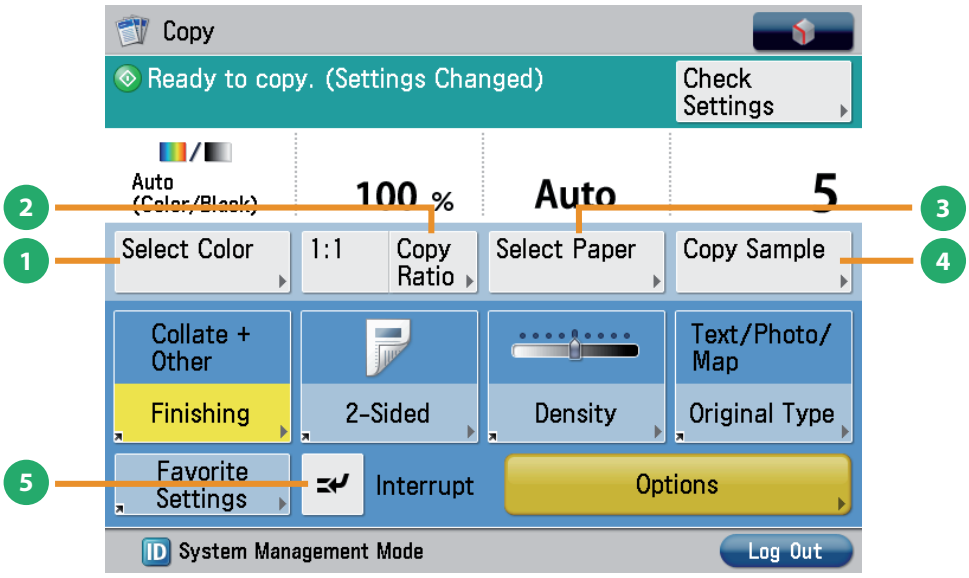

1 [Select Color]

Select the Color Mode

Select the Full Color/Black/Single Color/Two Colors mode. You can also set the machine to automatically select a color mode according to the original.

3 [Select Paper]

Select the Paper Source

You can select the paper size/type and the paper source. You can also set the machine to automatically recognize the original size and the copy ratio, and then copy.

2 [Copy Ratio]

Specify the copy ratio for a copy job.

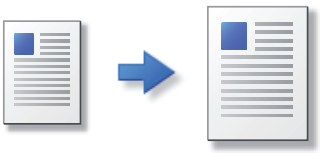

You can change the copy ratio by enlarging/reducing a copy to a preset paper size, or by entering a value to specify a desired copy ratio.

4 [Copy Sample]

Check Finishing of Copies Before Copying Multiple Sets

You can check the copy result of one set before making multiple sets of copies. You can also copy a specified page.

5 [Interrupt]

Rush Copy Priority

You can temporarily stop the current copy job and give priority to a rush copy.

Useful Copy Functions

This section describes the functions you can use on the [Options] (1/4) screen of the Copy function. For more information on the functions, see e-Manual > Copy.

The [Options] screen is divided into four screens. Pressing ▲ or ▼ on the bottom of the screen displays the next or previous screen.

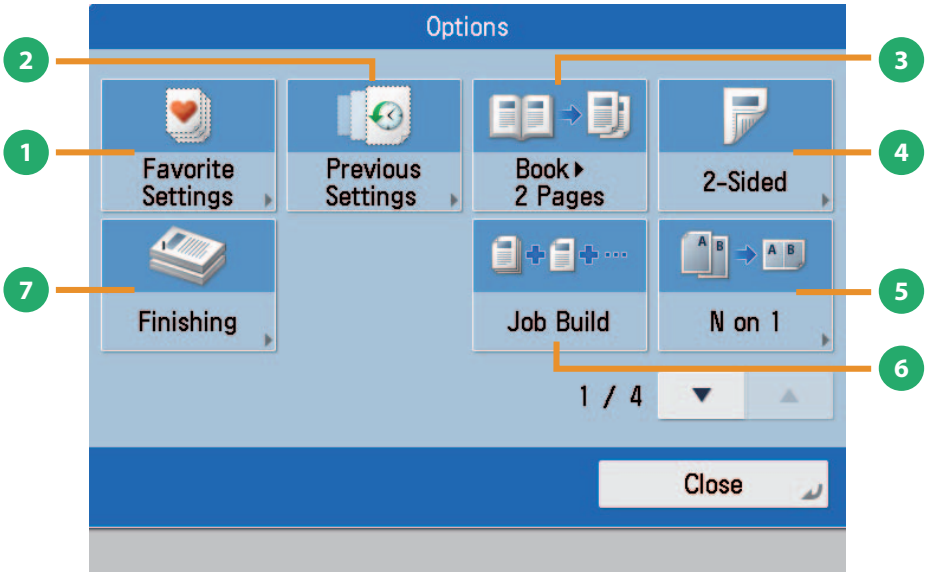

1 [Favorite Settings]

Set Multiple Copy Features With Ease

You can register frequently used copy settings, and recall the registered settings for future use.

3 [Book ▶ 2 Pages]

Copy an Open Book onto 2 Sheets of Paper

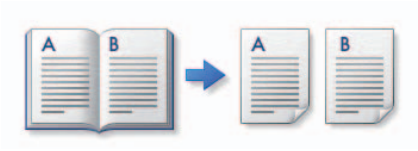

You can copy facing pages in a book onto separate sheets of paper.

2 [Previous Settings]

Recalling Previous Copy Jobs

You can recall the three most recent copy jobs, and make copies using the recalled copy settings.

4 [2-Sided]

Make Copies on Front and Back Sides of Paper

You can make one-sided copies from two-sided originals, or make two-sided copies of your originals.

5 [N on 1]

Copy Multiple Documents onto 1 Page

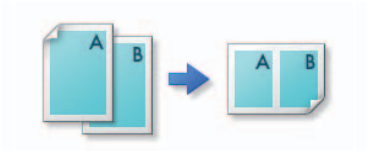

You can reduce multiple pages of the original to copy onto a single page. You can also change the order of the page layout.

6 [Job Build]

Scan Multiple Documents Separately and Copy Together

You can scan originals that are too many to be placed at once, by dividing them into multiple batches. After all originals are scanned, copying is started.

7 [Finishing]

Collating Copied Sheets

You can collate copies in page order or into groups of the same page.

[Staple]

Staple Copied Sheets

You can staple the printed sheets. You can select the stapling [Finishing].

* If the Inner Finisher is attached to the machine, [Staple] appears on the [Finishing] screen.

Useful Copy Functions

This section describes the functions you can use on the [Options] (2/4) screen of the Copy function. For more information on the functions, see e-Manual > Copy.

The [Options] screen is divided into four screens. Pressing ▲ or ▼ on the bottom of the screen displays the next or previous screen.

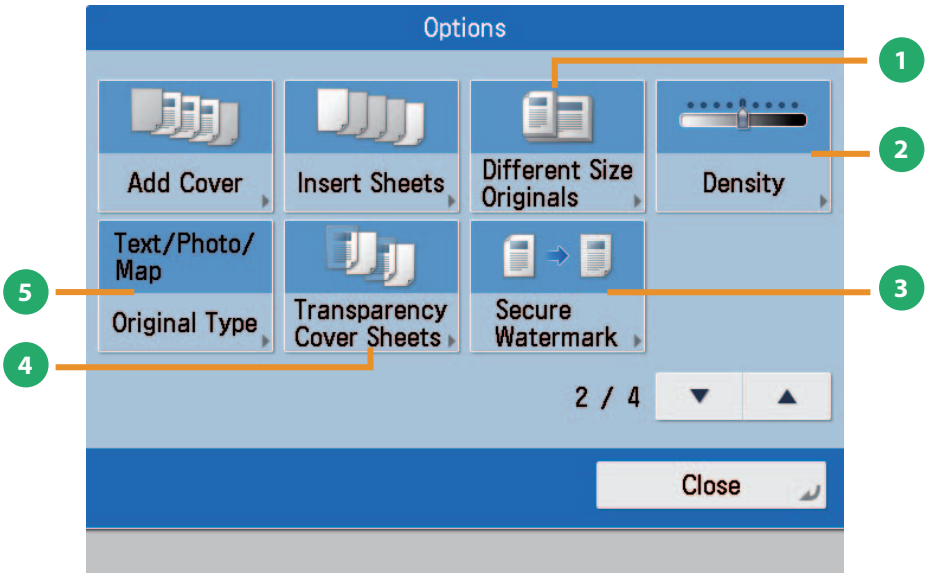

1 [Different Size Originals]

Copy Documents of Different Sizes at Once

You can make copies of differently sized originals at the same time without separating the documents. If the paper setting is set to Auto, the machine automatically selects the appropriate paper size.

3 [Secure Watermark]

Prevent Unauthorized Copying

You can embed hidden text, such as "CONFIDENTIAL" in the background of copies. The embedded text appears when the copies are printed, helping prevent unauthorized copying and information leakage.

2 [Density]

Change Density and Copy

Change the exposure. You can press ◗ to make the exposure darker or ◖ to make the exposure lighter. You can set the machine to automatically adjust the exposure.

4 [Transparency Cover Sheets]

Insert Paper Between Transparencies

The machine automatically interleaves a sheet of paper between each transparency when copying onto transparencies.

5 [Original Type]

Copy Photos Clearly

Image quality for scanning is adjusted according to the type of original, such as [Text], [Text/Photo/Map], or [Photo Printout].

Useful Copy Functions

This section describes the functions you can use on the [Options] (3/4 and 4/4) screen of the Copy function. For more information on the functions, see e-Manual > Copy.

The [Options] screen is divided into four screens. Pressing ▲ or ▼ on the bottom of the screen displays the next or previous screen.

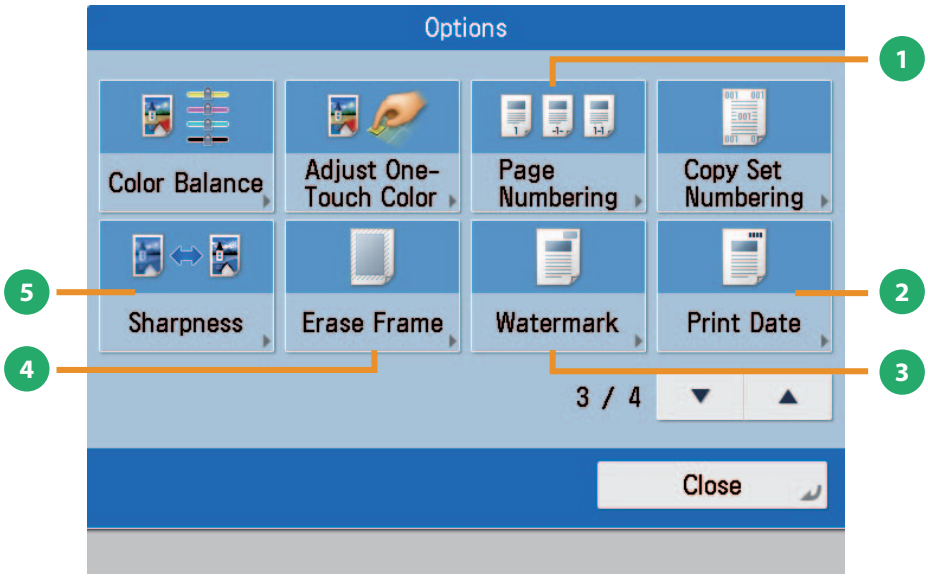

1 [Page Numbering]

Copy with page numbers.

You can copy with page numbers, and specify the size, position, or direction of the page number.

3 [Watermark]

Copy With Characters or Symbols

This mode enables you to copy a watermark and user-defined text onto the output. You can specify the size, position, or direction of the watermark.

2 [Print Date]

Copy the date onto the output.

You can copy the date (day, month, and year) onto the output. You can specify the size, position, or direction of the date.

4 [Erase Frame]

Erase Shading and Bindings From Documents

This mode enables you to erase shadows that appear when scanning various types of originals. You can also erase shadows of the punch holes.

5 [Sharpness]

Copy With Clear Text and Illustrations

This mode enables you to adjust the image quality for copying. You can use this mode when you want to soften and sharpen text, lines, or the outline of the image.

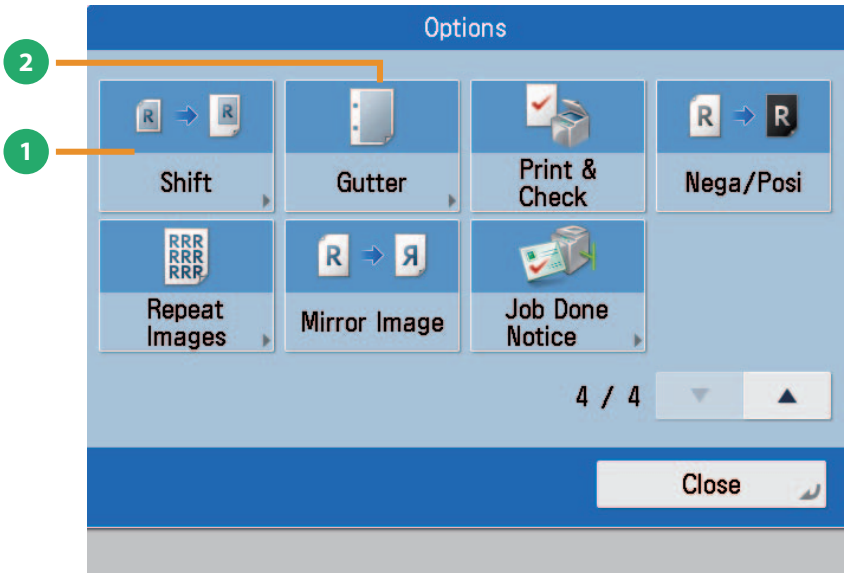

1 [Shift]

Shift Image and Copy

This mode enables you to make copies with the entire image shifted to the center or a corner. You can use the numeric keys to specify the location.

2 [Gutter]

Add Gutter

This mode enables you to make copies with the entire original image shifted by a designated width to create a margin on the copies. You can set different width values for each side of the paper.

Sending a Fax

This section describes the flow of basic fax operations.
An optional product is required to use the Fax function.

1 Placing Originals

Place the original in the feeder or on the platen glass.

Placing originals in the feeder

Adjust the slide guides to fit the size of your originals. Neatly place your originals with the side to be copied face up.

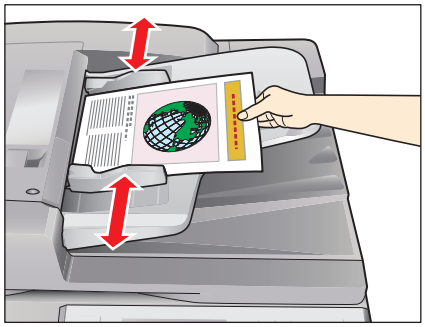

Placing originals on the platen glass

Open the feeder/platen cover.

Place your originals face down.

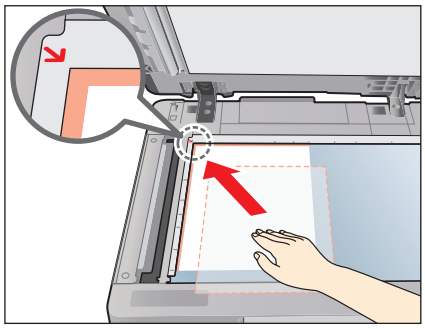

Gently close the feeder/platen cover.

2 Selecting Function

Select [Fax] from the Main Menu screen.

Press [Fax].

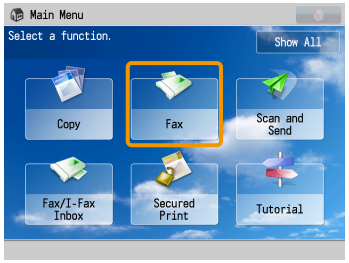

Basic Features screen for [Fax] is displayed.

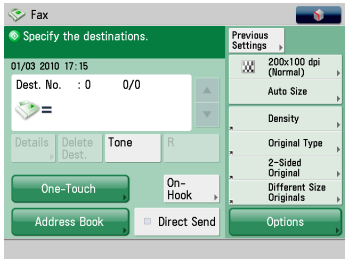

If a log in screen for Department ID Management or SSO-H appears, you must enter the applicable authentication information (ID, password/PIN). If the Card Reader-C1/Copy Card Reader-F1 is installed, first insert a control card.

You can set various facsimile functions. For more information, see p. 23 to p. 28 in this manual.

3 Specify the Destination

Enter the fax number using the numeric keys.

Enter the fax number.

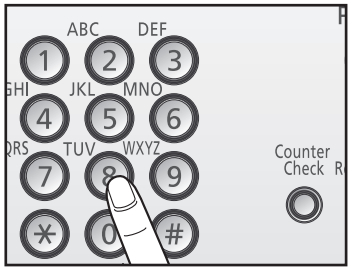

If you want to enter two or more fax numbers, press [OK] → enter the next destination.

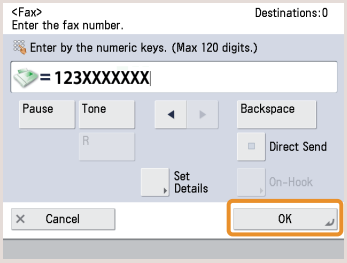

You can specify the destination using the one-touch buttons or [Address Book]. For more information on storing the destination, see e-Manual > Sending/Receiving a Fax.

4 Start Sending the Fax

After specifying the settings, press (Start).

Press (Start).

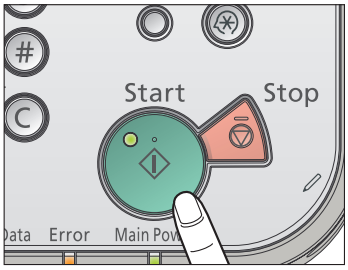

If the following screen appears, press (Start) to scan the next original. After all of the originals are scanned, press [Start Sending].

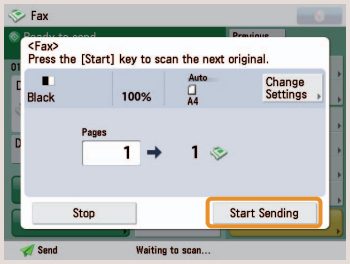

When sending is complete, remove your originals.

If a login service, such as Department ID Management or SSO-H has been set, press (Log In/Out) to log out.

Useful Fax Functions

To use the Fax functions, press [Fax] on the Main Menu screen. This section describes the main functions on the Basic Features screen of the Fax function. For more information on the functions, see e-Manual > Sending/Receiving a Fax. An optional product is required to use the Fax function.

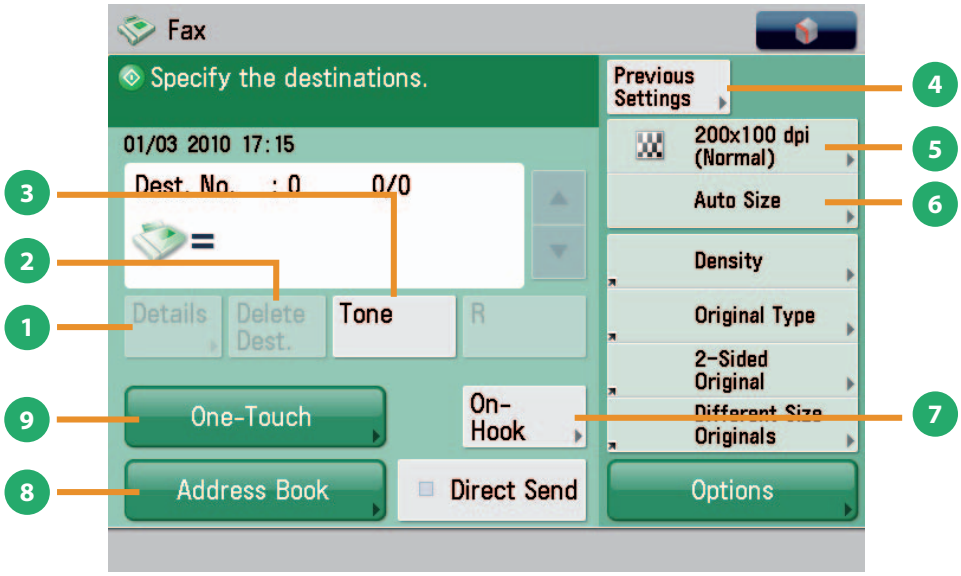

1 [Details]

Check the Detailed Information for the Destination

You can check the detailed information for the destination selected from the Address Book. You can change the new destination.

3 [Tone]

Fax Information Services

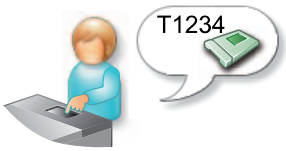

Press [Tone] to temporarily set the machine for tone dialing to use various fax information services.

2 [Delete Dest.]

Delete Specified Destination

You can delete the selected destination from the destination list.

4 [Previous Settings]

Recall Previous Settings and Fax

You can recall the three most recent destinations or fax settings, and send a fax using the recalled destination and settings.

5 [Resolution]

Clearly Scan Text and Images in Documents and Send

If the resolution is high, you can send fine text and images clearly. If the resolution is low, the data size becomes smaller and you can reduce the time it takes to send.

6 [Select Scan Size]

Select the Paper Size

You can select the original scanning size. If you press [Auto], the machine automatically recognizes the size of the original when scanning.

7 [On-Hook]

Use Fax Information Service

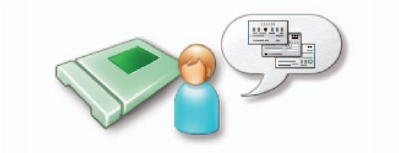

When using the fax information service, you can perform operations, such as entering fax numbers while listening to the automated audio response from the speaker of the machine.

8 [Address Book]

Set Frequently Used Destinations with Ease

You can store frequently used destinations in the Address Book.

9 [One-Touch]

Quickly Set Destinations

If a frequently used destination is stored in a one-touch button, you can specify the destination quickly.

[Set Details]

Sending with a Subaddress

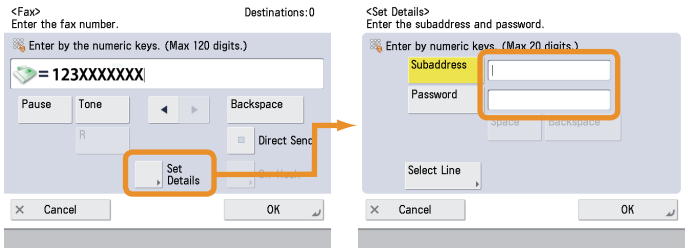

You can send or receive fax documents with increased security by attaching a subaddress and a password to your fax transactions.

* [Set Details] appears when you enter the fax number.

Useful Fax Functions

This section describes the main functions in [Options] of the Fax function. For more information on the functions, see e-Manual > Sending/Receiving a Fax.
The [Options] screen is divided into two screens. Press ▲ or ▼ on the bottom of the screen to display the next or previous screen.
An optional product is required to use the Fax function.

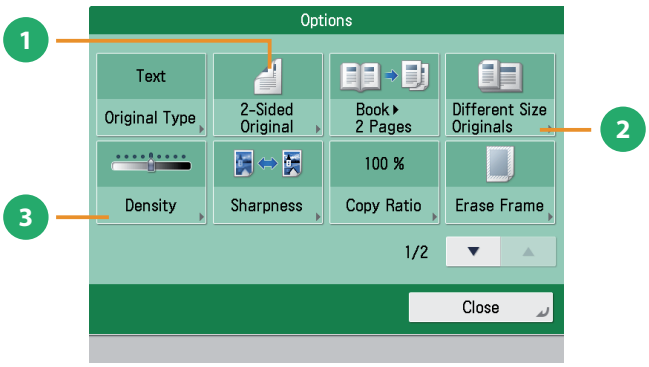

1 [2-Sided Original]

Automatically Scan Front and Back Sides of Documents

Set to send two-sided originals. You can select [Book Type] or [Calendar Type].

3 [Density]

Change Density and Send a Fax

Change the exposure. You can press ▸ to make the exposure darker or ◂ to make the exposure lighter. You can set the machine to automatically adjust the exposure.

2 [Different Size Originals]

Fax Documents of Different Sizes at Once

You can scan and fax differently sized originals as one group.

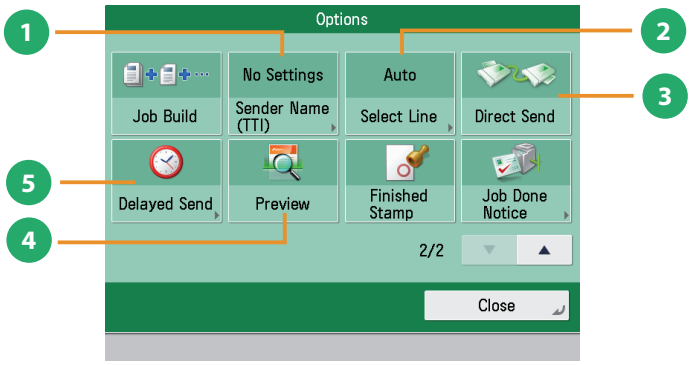

1 [Sender Name (TTI)]

Show Sender Name and Send a Fax

You can register a department name or personal name in advance, and display it on the destination fax machine.

* Set the Sender Name after specifying the destination.

2 [Select Line]

Specify the Telephone Line

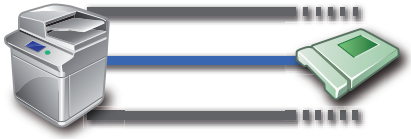

You can select the telephone line to use for sending a facsimile.

* Set the telephone line after specifying the destination.

3 [Direct Send]

Send Fax to Destination Correctly

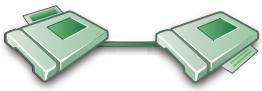

Check that the recipient can receive the facsimile, and then start scanning the originals. You can directly send without storing the original in memory.

4 [Preview]

Confirm Content of Scanned Documents Before Faxing

This mode enables you to preview the scanned data of your originals and to check the page count before sending a fax. You can also delete a specified page.

5 [Delayed Send]

Send Fax at a Specified Time

This mode enables you to store a send job in memory, and have it sent at a later time. You can specify from the current time to 23:59.

Useful Fax Functions

You can forward received fax documents to a specified destination automatically, or set the machine to store them in the Memory RX Inbox.
This section describes the flow of operations when the machine receives fax documents.
An optional product is required to use the Fax function.

Forwarding Settings

You can set the machine to automatically a forward received fax to a specified destination.
You can also specify the date and time for forwarding.

■ To set Forwarding Settings, specify the following settings in advance.

1. Press (Settings/Registration).
2. Press [Function Settings] → [Receive/Forward] → [Common Settings].
3. Press [Forwarding Settings] → [Register] → set the forwarding conditions.
4. Press [OK].

Memory Lock

This mode enables you to temporarily store the received fax in the Memory RX Inbox.
You can print or send stored fax documents.

■ To set Memory RX Inbox Settings, specify the following settings in advance.

1. Press (Settings/Registration).
2. Press [Function Settings] → [Receive/Forward] → [Common Settings].
3. Press [Set Fax/I-Fax Inbox] → select [On] for <Use Fax Memory Lock>.
4. Press [OK].

Processing Received Fax Documents

When the machine receives fax documents, they are processed as shown below:

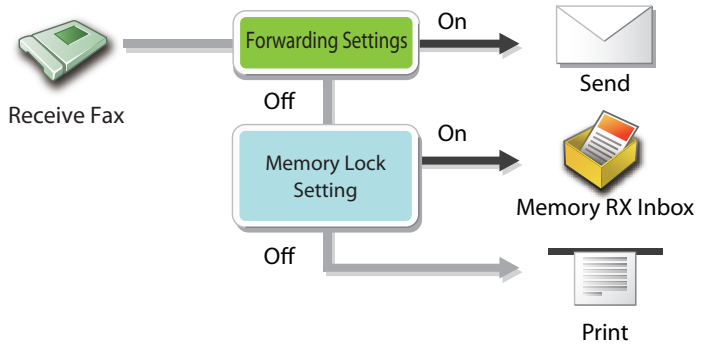

If Forwarding Settings and Use Fax Memory Lock are set to 'On', fax documents are forwarded to the specified destination.
The received fax documents can be stored in the Confidential Fax Inbox by specifying the Confidential Fax Inbox as the forwarding destination.
You can print the fax documents stored in the Confidential Fax Inbox whenever necessary.
For more information on the Confidential Fax Inbox, see e-Manual > Fax/I-Fax Inbox.

To Print a Fax Document in the Memory RX Inbox:

Press [Fax/I-Fax Inbox] on the Main Menu.

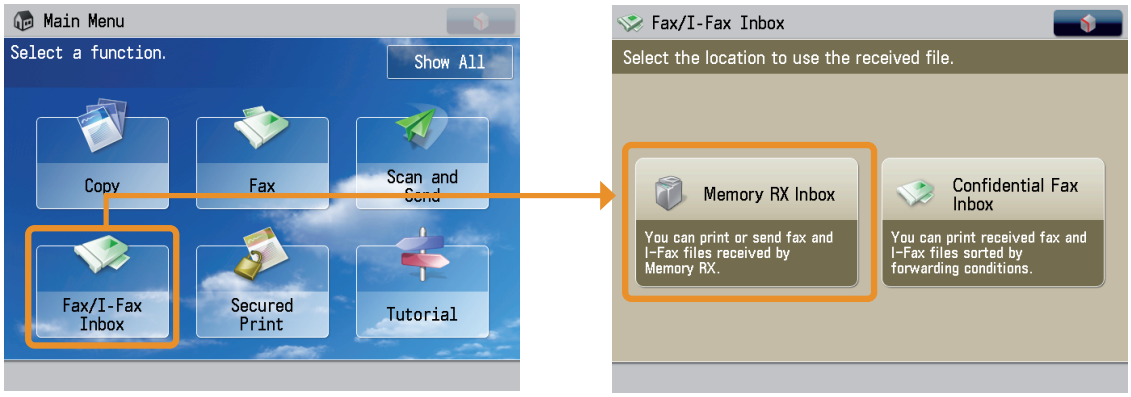

1. Press [Fax/I-Fax Inbox] → [Memory RX Inbox] → [Memory RX Inbox].
2. Select the fax document that you want to print → press [Print].
3. Press [Start Printing].

You can also send stored fax documents in the Memory RX Inbox.
For more information, see e-Manual > Fax/I-Fax Inbox.

Sending Scanned Documents to an E-Mail, I-Fax, and File Server

This section describes the flow of basic scan and send operations.
If you are using the imageRUNNER ADVANCE C2020, depending on the region, an optional product may be required to use the Send function.

1 Placing Originals

Place the original in the feeder or on the platen glass.

Placing originals in the feeder

Adjust the slide guides to fit the size of your originals. Neatly place your originals with the side to be copied face up.

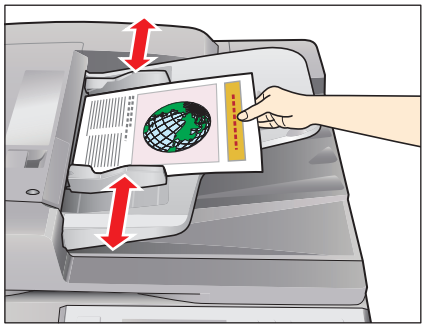

Placing originals on the platen glass

Open the feeder/platen cover.

Place your originals face down.

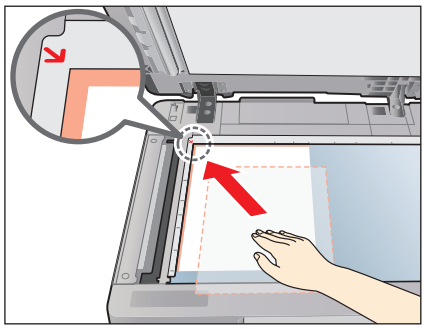

Gently close the feeder/platen cover.

2 Selecting Function

Select [Scan and Send] from the Main Menu screen.

Press [Scan and Send].

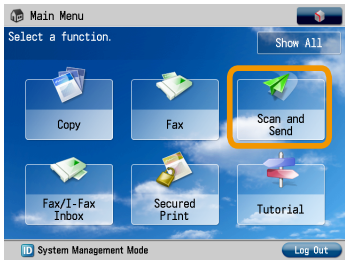

Basic Features screen for [Scan and Send] is displayed.

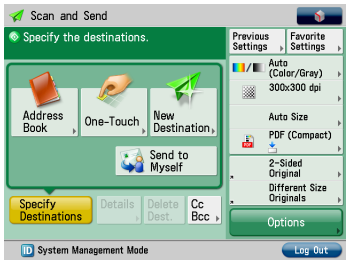

If a log in screen for Department ID Management or SSO-H appears, you must enter the applicable authentication information (ID, password/PIN). If the Card Reader-C1/Copy Card Reader-F1 is installed, first insert a control card.

You can set various send functions. For more information, see p. 31 to p. 36 in this manual.

3 Specify the Destination

Press [Address Book] → select the destination → press [OK].

Press [Address Book].

If you are sending to only one destination, select a destination.

If you are sending to multiple destinations, select the destinations → press [OK].

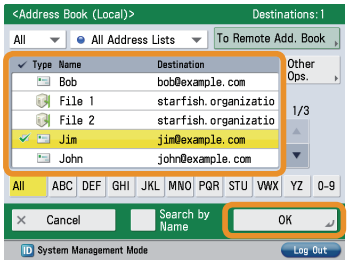

For more information on storing the destination in the address book, see e-Manual > Scan and Send.

You can specify the destination using the one-touch buttons or frequently used settings. Also, if you want to send to a new destination not yet stored, press [New Destination] → enter the destination.

4 Start Sending

After specifying the settings, press (Start).

Press (Start).

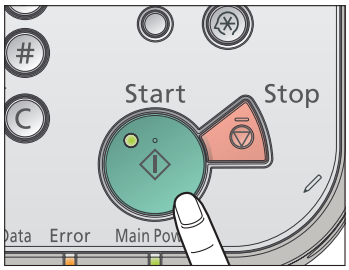

If the following screen appears, press (Start) to scan the next original. After all originals are scanned, press [Start Sending].

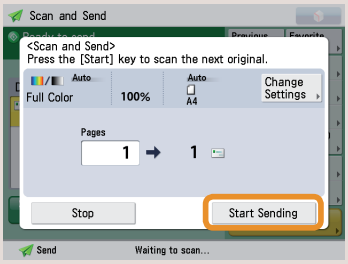

When scanning is complete, remove your originals.

If a login service, such as Department ID Management or SSO-H has been set, press (Log In/Out) to log out.

Useful Send Functions

To use the Send functions, press [Scan and Send] on the Main Menu screen. This section describes the main functions on the Basic Features screen of the Scan and Send function. For more information on the functions, see e-Manual > Scan and Send.
If you are using the imageRUNNER ADVANCE C2020, depending on the region, an optional product may be required to use the Send function.

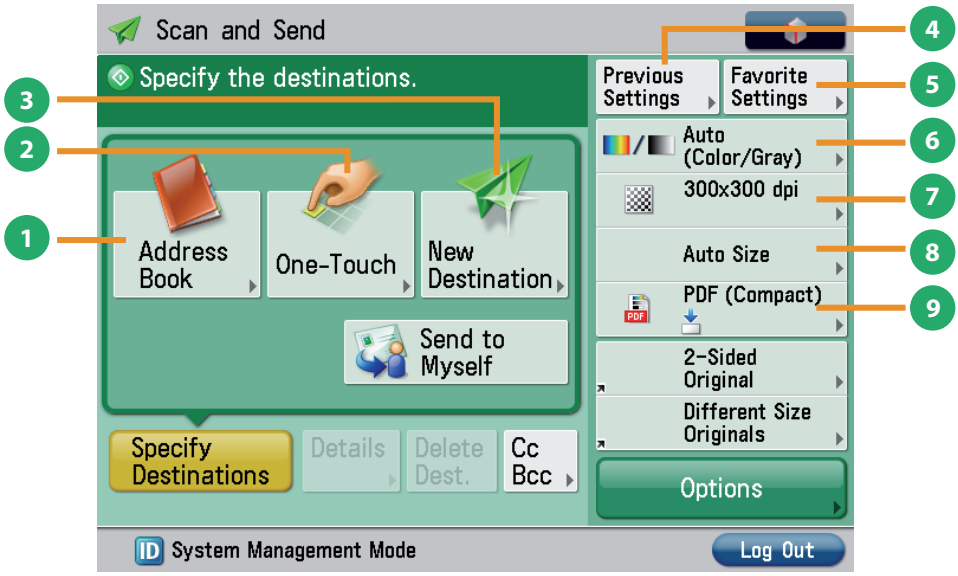

1 [Address Book]

Set Frequently Used Destinations With Ease

You can store frequently used e-mail, I-fax, or file server destinations in the Address Book.

3 [New Destination]

Enter New Destinations

This mode enables you to specify a new destination not stored in the Address Book or one-touch buttons.

2 [One-Touch]

Quickly Set Destinations

If the frequently used destination is stored in a one-touch button, you can specify the destination quickly.

4 [Previous Settings]

Recall Previous Settings and Send Settings

You can recall the three most recent destinations or send settings, and then send using the recalled destination or settings.

5 [Favorite Settings]

Set Multiple Send Features With Ease

You can register frequently used destination and settings. You can recall the registered settings for future use.

6 [Select Color]

Select the Color Mode

You can select the Full Color, Grayscale, or Black-and-White mode. You can also set the machine to automatically select a color mode according to the original.

7 [Resolution]

Clearly Scan Text and Images in Documents and Send

If the resolution is high, you can send fine text and images clearly. If the resolution is low, the data size becomes smaller and you can reduce the time it takes to send.

8 [Select Scan Size]

Select the Paper Size

You can select the original scanning size. If you press [Auto], the machine automatically recognizes the size of the original when scanning.

9 [File Format]

Select File Format and Send

If you are sending to an e-mail address or file server, you can specify the file format. You can select from PDF, XPS, JPEG, or TIFF.

Useful Send Functions

To use the Send functions, press [Scan and Send] on the Main Menu screen. This section describes the main functions on the Basic Features screen of the Scan and Send function. For more information on the functions, see e-Manual > Scan and Send.
If you are using the imageRUNNER ADVANCE C2020, depending on the region, an optional product may be required to use the Send function.

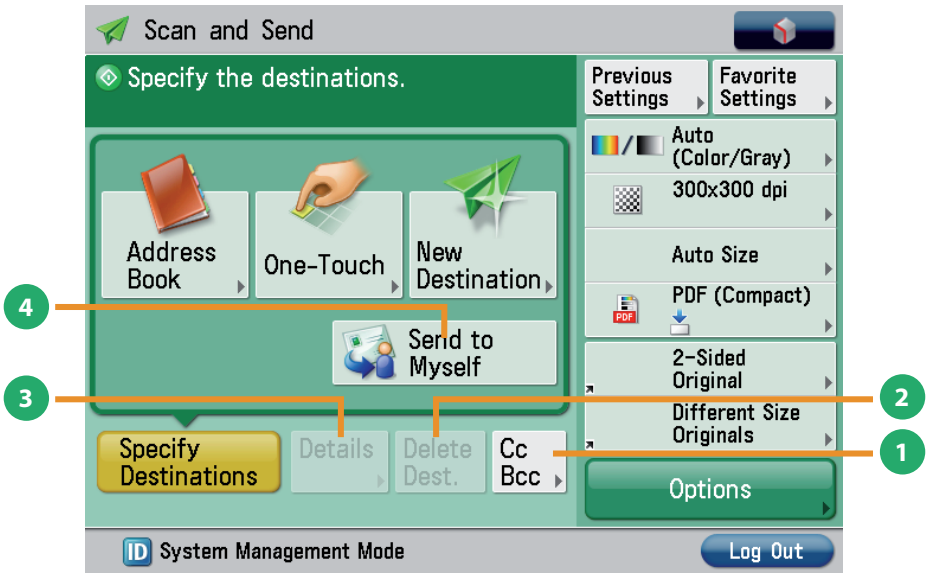

1 [Cc/Bcc]

Specify e-mail address destinations for the Cc and Bcc addresses in addition to the destination for the documents.

In addition to the destination for the documents, you can specify e-mail address destinations for the Cc and Bcc addresses.

3 [Details]

Check the Detailed Information for the Destination

You can check the detailed information for the destination selected from the destination list. You can also change the new destination.

2 [Delete Dest.]

Delete Specified Destination

You can delete a selected destination from the destination list.

4 [Send to Myself]

Send Documents to Your Own e-mail Address

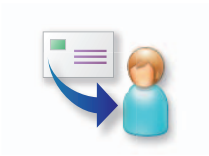

You can specify your e-mail address as the destination.

* [Send to Myself] appears if SSO-H is set as the login service.

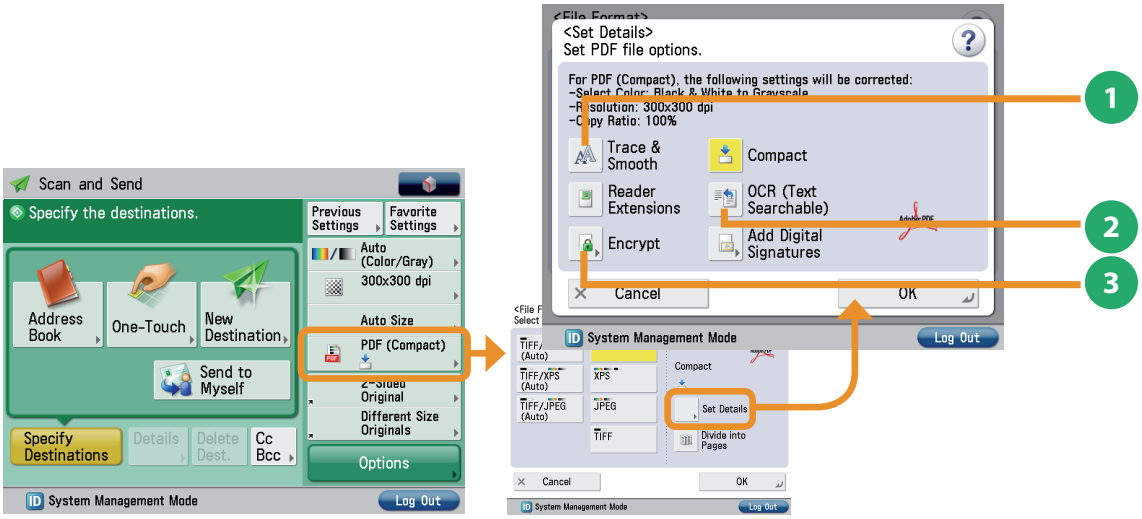

1 [Trace & Smooth]

Send Files That Can Be Edited by Illustration Software

This mode enables you to convert the text and the graphics to scalable outline data. The outline data (Trace) can be extracted and used in a specific illustrator software.

3 [Encrypt]

Encrypt Scanned Documents to Send

You can convert a scanned original into a PDF file and set a password for it. You can also restrict print and edit functions.

2 [OCR (Text Searchable)]

Send Text Searchable Files

This mode enables you to perform OCR on a scanned original to create a file with searchable text, and then send the file. You can use the text as a text data.

<Divide Data>

Divide Large Data and Send

The data is divided into multiple parts before being sent if the size of the data being sent exceeds the value set for the maximum data size. Check that the recipient can combine the divided data before setting this mode.

* To specify the <Divide Data> settings, press [New Destination] → [E-Mail].

Useful Send Functions

This section describes the main functions on the Basic Features screen of the Scan and Send function. For more information on the functions, see e-Manual > Scan and Send.
The [Options] screen is divided into three screens. Press ▲ or ▼ on the bottom of the screen to display the next or previous screen.
If you are using the imageRUNNER ADVANCE C2020, depending on the region, an optional product may be required to use the Send function.

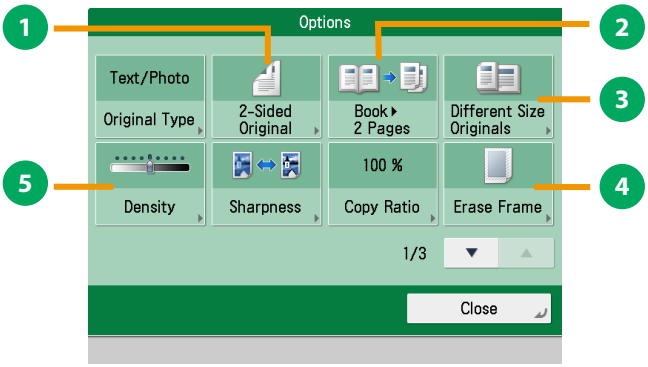

1 [2-Sided Original]

Automatically Scan Front and Back Sides of Documents

Set to send two-sided originals. You can select [Book Type] or [Calendar Type].

2 [Book ▶ 2 Pages]

Send an Open Book onto 2 Sheets of Paper

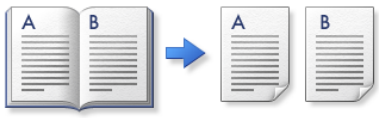

You can send facing pages in a book onto separate sheets of paper.

3 [Different Size Originals]

Send Documents of Different Sizes at Once

You can scan and send differently sized originals fed together in one group.

4 [Erase Frame]

Erase Shading and Bindings From Documents

This mode enables you to erase shadows that appear when scanning various types of originals. You can also erase the shadows of the punch holes.

5 [Density]

Change Density and Send

Change the exposure. You can press ◗ to make the exposure darker or ◖ to make the exposure lighter. You can set the machine to automatically adjust the exposure.

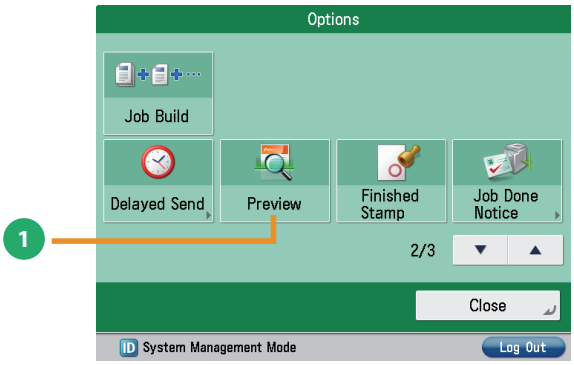

1 [Preview]

Confirm Content of Scanned Documents Before Sending

This mode enables you to preview the scanned data of your originals and to check the page count before sending your document. You can also delete a specified page.

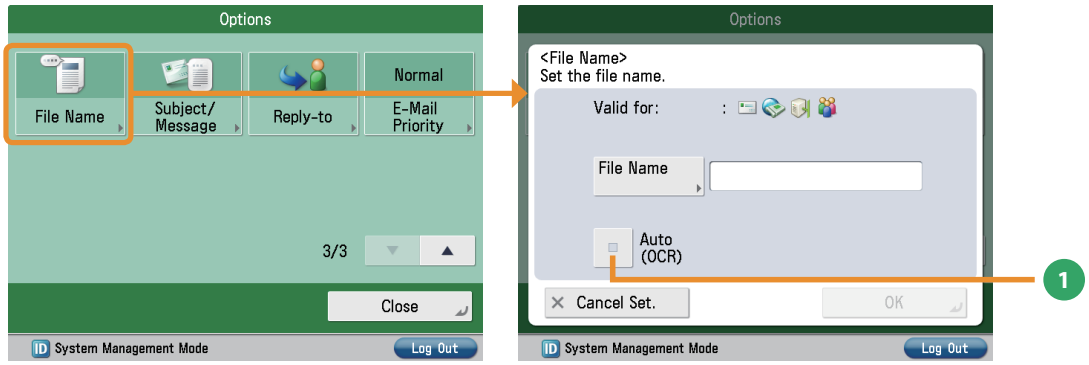

1 [Auto (OCR)]

Automatically Put File Name on Document to Be Sent

When [PDF (OCR)] is set as the file format, you can set the machine to automatically extract the first line of text in the document for use as its file name.

Storing Scanned Data

This section describes the basic flow of operations for scanning an original and saving it as a file. This section describes an example of how to store scanned data in memory media.
If you are using the imageRUNNER ADVANCE C2020, depending on the region, an optional product may be required to use the Advanced Box of other imageRUNNER ADVANCE series machines on the network.

1 Placing Originals

Place the original in the feeder or on the platen glass.

Placing originals in the feeder

Adjust the slide guides to fit the size of your originals. Neatly place your originals with the side to be copied face up.

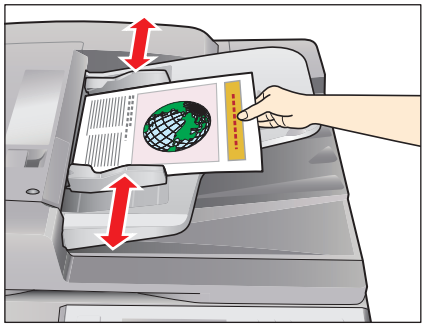

Placing originals on the platen glass

Open the feeder/platen cover.

Place your originals face down.

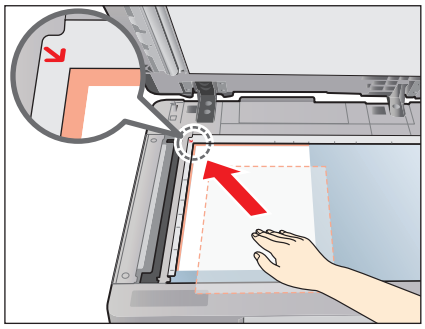

Gently close the feeder/platen cover.

2 Selecting Function

Select [Scan and Store] from the Main Menu screen.

Press [Scan and Store].

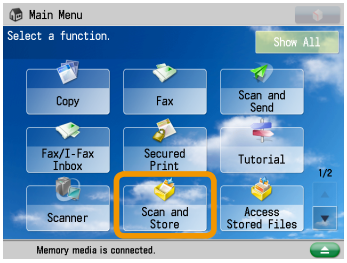

Select [Memory Media] from the screen where you can select the type of storage location.

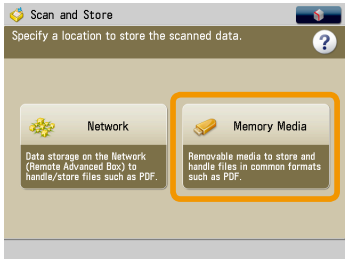

If a log in screen for Department ID Management or SSO-H appears, you must enter the applicable authentication information (ID, password/PIN). If the Card Reader-C1/Copy Card Reader-F1 is installed, first insert a control card.

- To use memory media, specify the following settings in advance.
  1. Press (Settings/Registration).
  2. Press [Preferences] → [Display Settings] → [Store Location Display Settings].
  3. Select [On] for <Memory Media>.
  4. Press [OK].
- To save the scanned data to memory media, connect a USB memory to the USB port.
- For information on the supported memory media, see e-Manual > Scan and Store.
- To access the Network (Advanced Box) see "Setting Up an Advanced Box on the Network" in the Setup Guide.

3 Select Storage

Specify memory media that you want to store the file in.

Select the memory media.

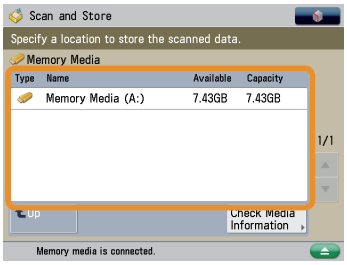

Press [Scan].

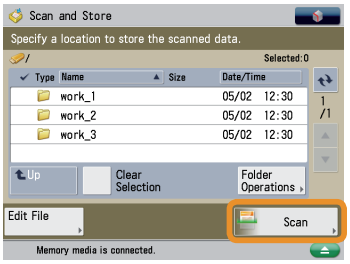

The Scan screen is displayed.

You can set various scan functions. For more information, see p. 39 to p. 42 in this manual.

4 Start Scanning

After specifying the settings, press (Start).

Press (Start) .

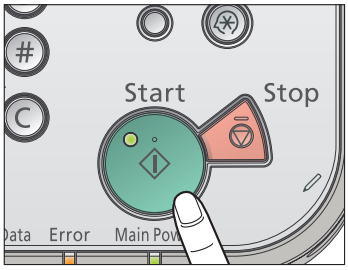

When scanning is complete, remove your originals.

If the following screen appears, press (Start) to scan the next original. After all originals are scanned, press [Start Storing].

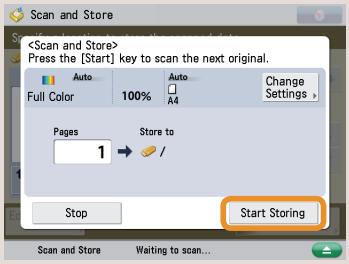

When scanning is complete, remove your originals.

If a login service such, as Department ID Management or SSO-H has been set, press (Log In/Out) to log out.

Useful Scan Functions

To scan the original and store it, press [Scan and Store] on the Main Menu screen. This section describes the basic operations you can perform using the Scan and Store function. For more information on the functions, see e-Manual > Scan and Store.
If you press [Scan] after selecting the storage location, the screen below appears.
If you are using the imageRUNNER ADVANCE C2020, depending on the region, an optional product may be required to use the Advanced Box of other imageRUNNER ADVANCE series machines on the network.

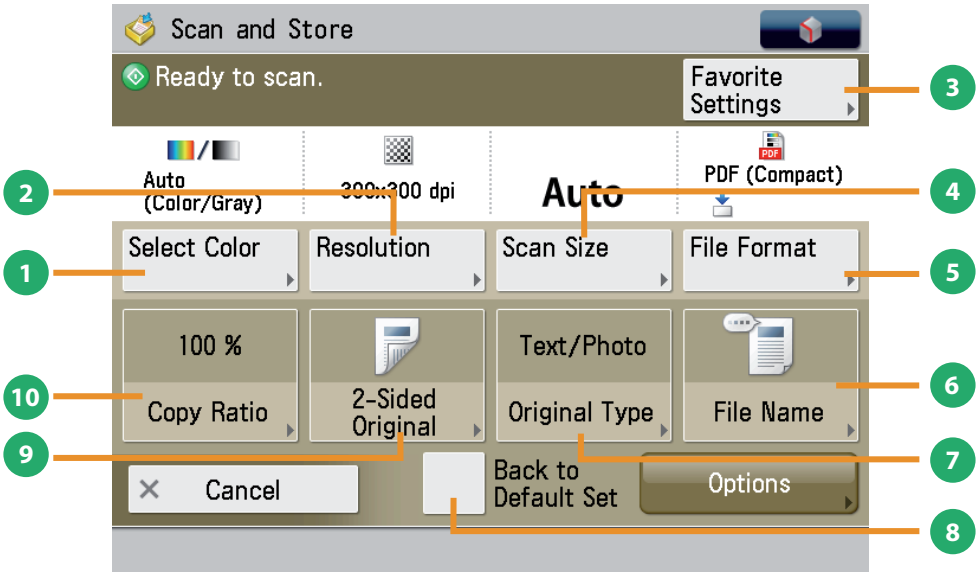

1 [Select Color]

Select the Color Mode

You can select the Full Color or the Black mode. You can also set the machine to automatically select a color mode according to the original.

3 [Favorite Settings]

Set Multiple Scan Features With Ease

You can register frequently used scan settings. You can recall the registered settings for future use.

2 [Resolution]

Scan Fine Text and Image

If the resolution is high, you can store fine text and images clearly. If the resolution is low, the data size becomes smaller.

4 [Scan Size]

Select the Scanning Size

You can select the original scanning size. If you press [Auto], the machine automatically recognizes the size of the original when scanning.

5 [File Format]

Specify the File Format and Scan

You can set a file format, such as a PDF format to the scanned document so that it can be accessed from your computer.

6 [File Name]

Specify the File Name and Scan

You can specify a file name for the data to be scanned.

7 [Original Type]

Scan Photos Clearly

Image quality for scanning is adjusted according to the type of original, such as [Text], [Text/Photo/Map], or [Photo Printout].

8 [Back to Default Set]

Clear the Settings

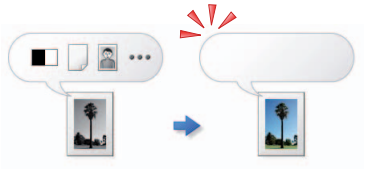

This mode is useful if you want to clear all settings and reset the settings. All settings are cleared.

9 [2-Sided Original]

Automatically Scan Front and Back Sides of Documents

Set to scan two-sided originals. You can select [Book Type] or [Calendar Type].

10 [Copy Ratio]

Changing the Scan (Zoom) Ratio

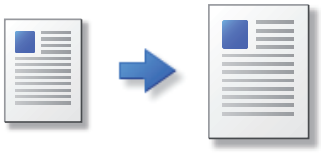

You can change the scan (zoom) ratio by enlarging/reducing a scanned document to a preset paper size, or by entering a value to specify a desired scan ratio.

Useful Scan Functions

This section describes things you can do with [Options] for Scan and Store.
If you are using the imageRUNNER ADVANCE C2020, depending on the region, an optional product may be required to use the Advanced Box of other imageRUNNER ADVANCE series machines on the network.

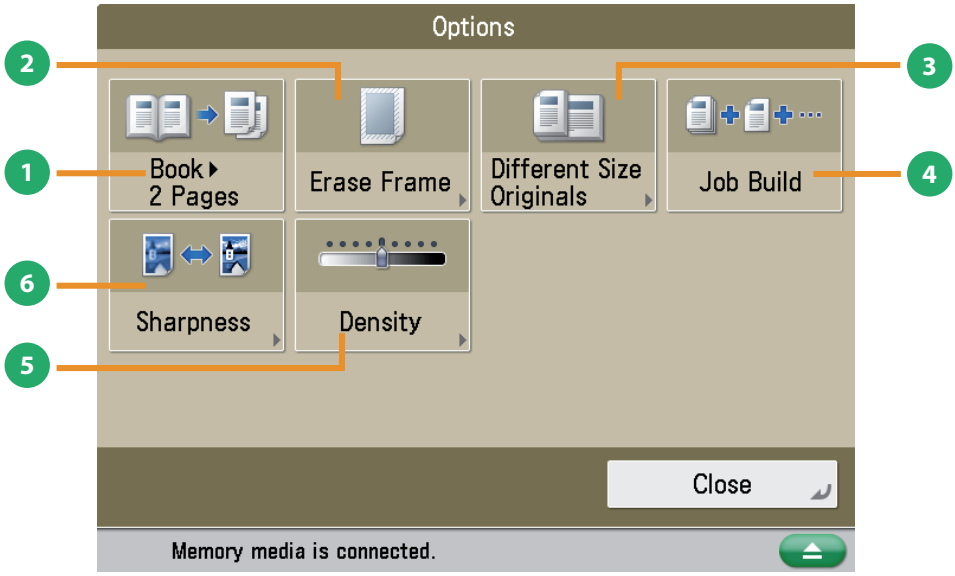

1 [Book ▶ 2 Pages]

Scan an Open Book onto 2 Sheets of Paper

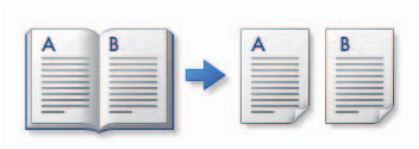

You can scan facing pages in a book one sheet at a time.

3 [Different Size Originals]

Scan Documents of Different Sizes at Once

You can scan differently sized originals as one group.

2 [Erase Frame]

Erase Borders and Binding Holes from Documents

This mode enables you to erase shadows that appear when scanning various types of originals. You can also erase shadows of the punch holes.

4 [Job Build]

Scan Multiple Documents and Store as a File

You can scan originals that are too many to be placed at once, by dividing them into multiple batches. You can store after all of the originals are scanned.

5 [Density]

Change the Exposure and Scan

Change the exposure. You can press ◗ to make the exposure darker or ◖ to make the exposure lighter. You can set the machine to automatically adjust the exposure.

6 [Sharpness]

Scan With Clear Text and Illustrations

This mode enables you to adjust image quality for scanning. You can use this mode when you want to soften and sharpen text, lines, or the outline of the image.

Accessing Stored Files

This section describes the flow of basic operations to print stored data. The procedure for storing to memory media is used here as an example.
If you are using the imageRUNNER ADVANCE C2020, depending on the region, an optional product may be required to use the Advanced Box of other imageRUNNER ADVANCE series machines on the network.

1 Selecting Function

Select [Access Stored Files] from the Main Menu screen.

Press [Access Stored Files].

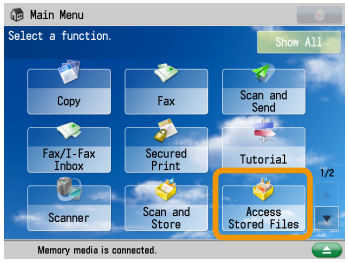

If a log in screen for Department ID Management or SSO-H appears, you must enter the applicable authentication information (ID, password/PIN). If the Card Reader-C1/Copy Card Reader-F1 is installed, first insert a control card.

2 Select Storage

Specify the storage location for the file.

Select [Memory Media] from the Storage Selection screen.

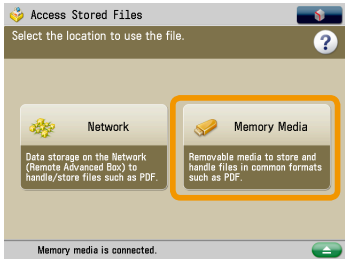

Select the desired memory media.

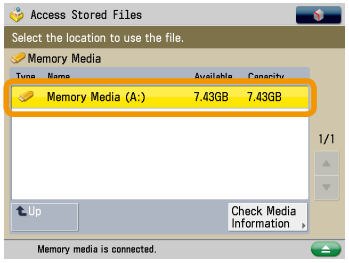

3 Select File

Select the file to print → press [Print].

Select the file to print.

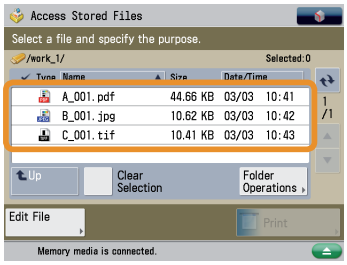

Press [Print].

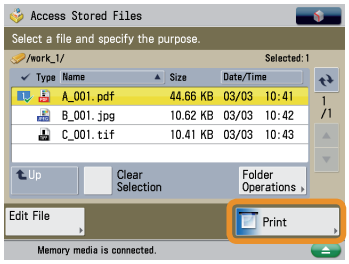

The Print screen is displayed.

4 Start Printing

After specifying the settings, press [Start Printing].

Press [Start Printing].

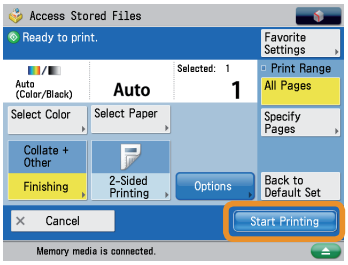

You can set various print settings on the screen displayed when [Change Print Settings] is pressed. For more information, see p. 45 to p. 47 in this manual.

When printing is complete, the display returns to the memory media selection screen.

If a login service, such as Department ID Management or SSO-H has been set, press (ID) (Log In/Out) to log out.

Useful Print Functions

To print stored files, press [Access Stored Files] on the Main Menu screen. This section describes the basic operations you can perform using the Access Stored Files function. For more information on the functions, see e-Manual > Access Stored Files.
If you press [Print] after selecting the storage location, the screen below appears.
An optional product is required to print PDF files.

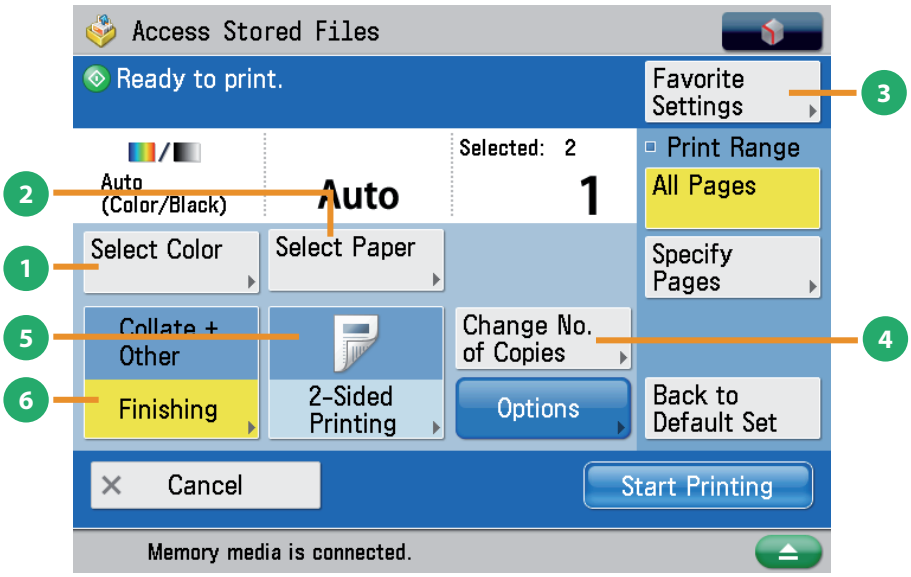

1 [Select Color]

Select the Color Mode

Select the Full Color/Black mode. The Auto (Color/Black) mode enables the machine to automatically select a color mode or Black-and-White mode according to the file.

3 [Favorite Settings]

Set Multiple Print Features With Ease

This mode enables you to register frequently used print settings. You can recall the registered settings for future use.

2 [Select Paper]

Select the Color Mode

You can select the paper size, type and the paper source. Also, you can set the machine to automatically recognize the original size and the copy ratio, and then print.

4 [Change No. of Copies]

Change the Number of Prints

This mode is available only when multiple files are selected. You can change the number of print sets.

* If a file is selected, you can change the number of prints by pressing 0 - 9 (numeric keys).

5 [2-Sided Printing]

Print on Front and Back Sides of Paper

This mode enables you to print successive pages of a stored file on both sides of a sheet of paper.

6 [Finishing]

Collating Printed Sheets

You can collate the printed sheets in page order or into groups of the same page.

[Staple]

Staple Printed Sheets

You can staple the printed sheets. You can select the stapling location.

* If the Inner Finisher is attached to the machine, [Staple] appears on the [Finishing] screen.

Useful Print Functions

This section describes the main functions in [Options] that you can use when printing a PDF file stored in [Access Stored Files]. For more information on the functions, see e-Manual > Access Stored Files.
If you are using the imageRUNNER ADVANCE C2020, depending on the region, an optional product may be required to use the Advanced Box of other imageRUNNER ADVANCE series machines on the network. An optional product is required to print PDF files.

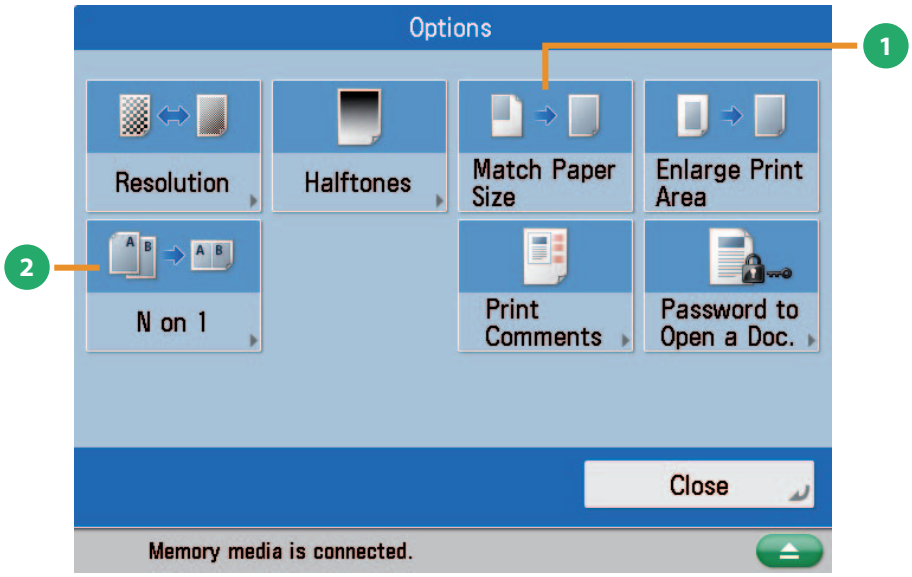

1 [Match Paper Size]

Enlarge/Reduce an Image to Match the Paper Size

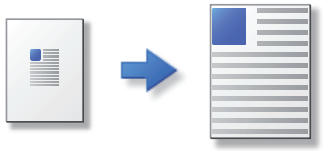

You can enlarge/reduce a PDF file image to match the paper size.

* If you are printing a JPEG or TIFF file, [Enlarge/Reduce] is displayed on the Options screen.

2 [N on 1]

Reduce Multiple Pages To Print Onto a Single Page

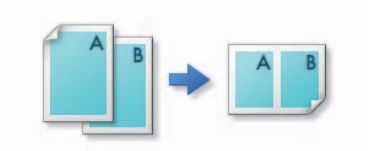

You can reduce multiple pages of a file to print onto a single page.
You can also change the order of the layout.

Useful File Operation Functions

To perform various operations on stored files, press [Access Stored Files] on the Main Menu screen. This section describes the functions you can use to edit stored files. Select the file that you want to edit from the list of stored files, press [Edit File], and the following screen is displayed.
If you are using the imageRUNNER ADVANCE C2020, depending on the region, an optional product may be required to use the Advanced Box of other imageRUNNER ADVANCE series machines on the network.

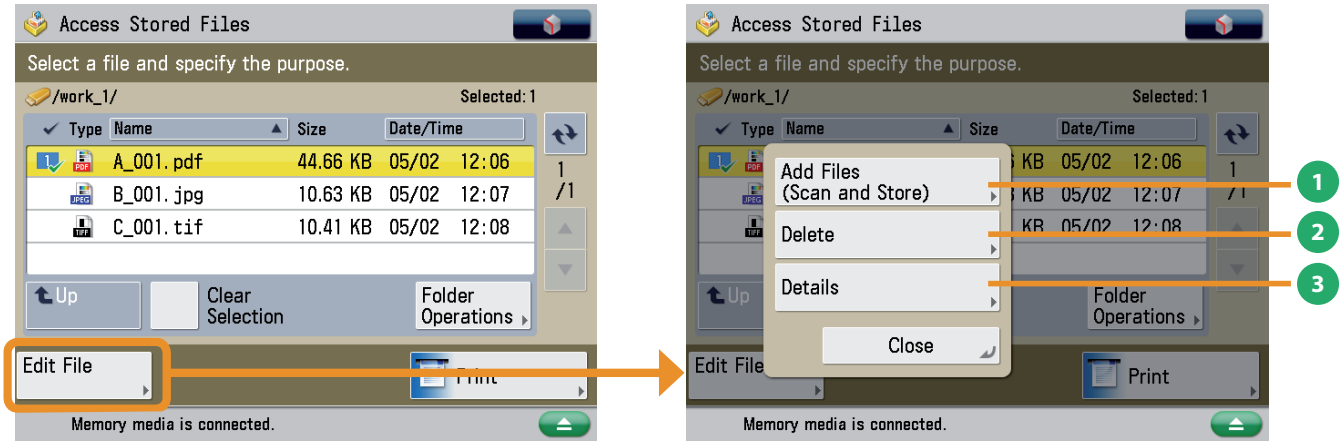

1 [Add Files (Scan and Store)]

Add Files

You can scan the original and store the new file in the selected storage location.

3 [Details]

Check Detailed Information for Stored Files

You can check the detailed information for the stored file.

2 [Delete]

Delete Stored Files

You can delete stored files. You can erase unnecessary files and arrange the storage location.

Remote UI

The Remote UI (User Interface) is preinstalled software in the machine that enables you to access the machine's functions by using your computer's Web browser. For example, the Remote UI enables you to access the machine to check job status, execute jobs, and specify various settings.

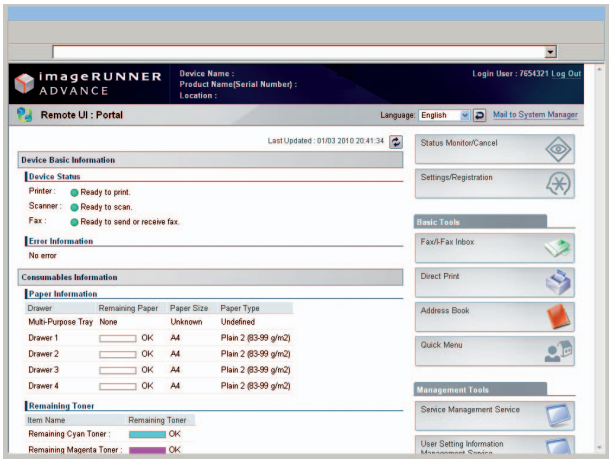

To be able to use the Remote UI, all you need is a Web browser and a network connection between your computer and the machine.

The Remote UI Is Useful in the Following Situations

- **If you want to check the job status**
- **If you want to edit the Address Book from your computer**
- **If you want to check the remaining amount of paper or toner from your seat**

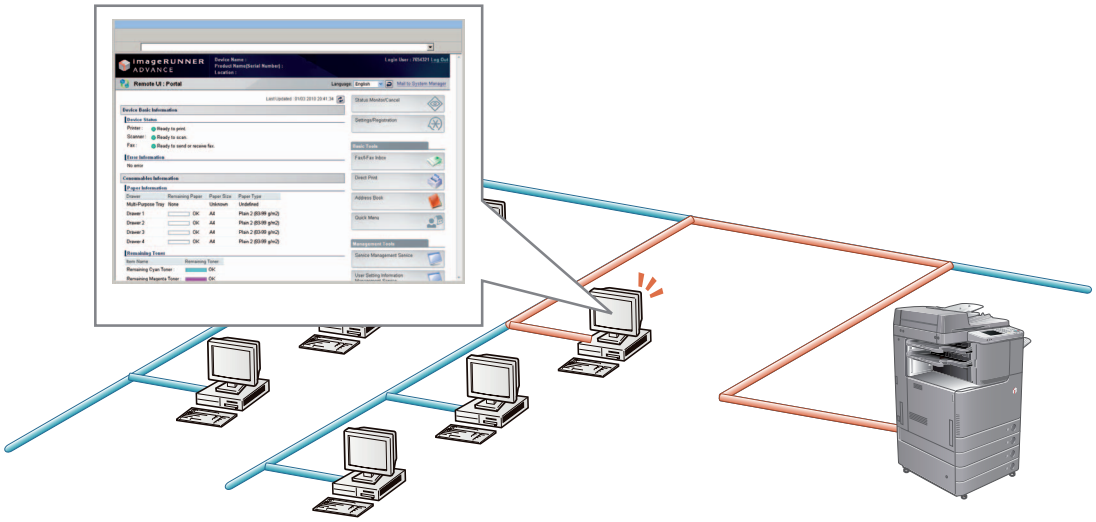

■ To enable the Remote UI:

- Log in as the administrator → specify the following settings.
  1. Press (Settings/Registration).
  2. Press [Management Settings] → [License/Other] → [Remote UI].
  3. Press [On] → [OK].
  4. Turn OFF the main power of the machine, wait at least 10 seconds, and then turn ON the main power again.
- The [Remote UI] setting is made effective only after turning the machine's main power OFF, and then ON. For instructions on turning OFF/ON the main power, see "Before Using This Machine."

1 Accessing the Remote UI from a Web Browser

Access the Remote UI from a Web browser.

Enter the IP address of the machine in [Address] in the Web browser.

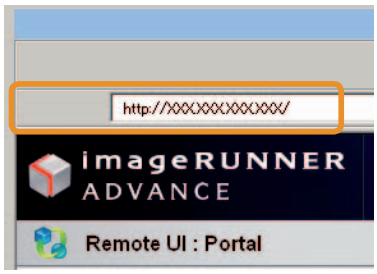

Press [ENTER] on the keyboard.

To login as the administrator, enter the [System Manager ID] and [System PIN] → click [Administrator Login].

To login as a general user, click [General User Login].

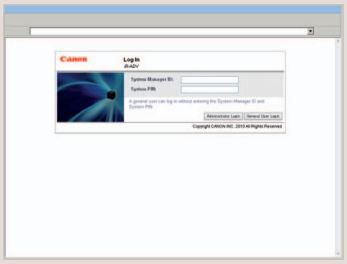

If the Log In screen is displayed, enter the user name and password → click [Log In].

If a login service such as Department ID Management or SSO-H has been set, enter the appropriate login information.

2 Checking the Job Status and Specifying the Settings

Check the Job Status and Specify the Settings.

To check the job status:

Click [Status Monitor/Cancel].

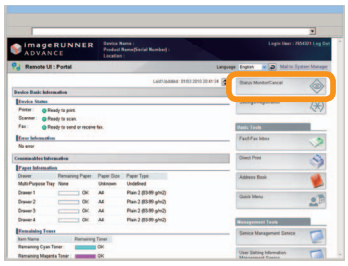

To specify the settings:

Click [Settings/Registration].

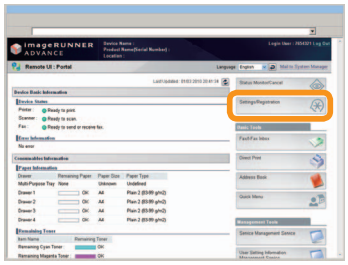

Printing from a Computer

If you install a printer driver in your computer, you can use the machine to print data created using application software.
This section describes the flow of basic operations to print data from your computer.

1 Display Print Settings Screen

Select [Print] from the [File] menu.

From the [File] menu of the application software you are using for the document to print → select [Print].

The print dialog box is displayed.

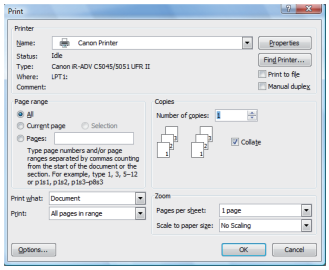

2 Display Properties Screen of Printer Driver

Select the printer to use.

Select the printer to use in [Printer].

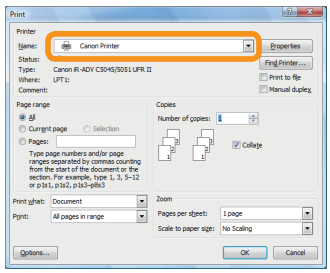

Click [Properties].

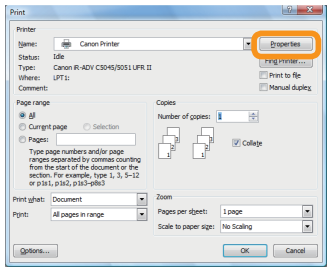

The properties screen of the printer driver appears.

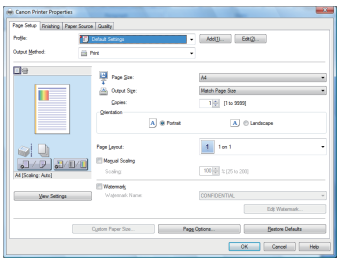

- Printing methods may differ depending on the applications you are using. For details, see the instruction manuals provided with the application software.
- The display may differ according to the operating system, as well as the type and version of the printer driver.

3 Specify Print Settings

Specify the print settings.

Specify the desired settings → click [OK].

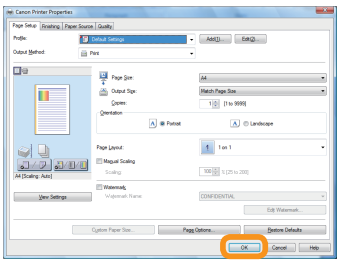

To display detailed descriptions for each print setting, click [Help] on the bottom right of the Properties screen.

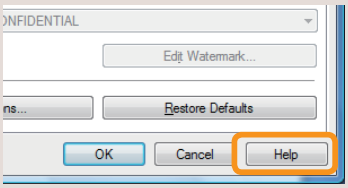

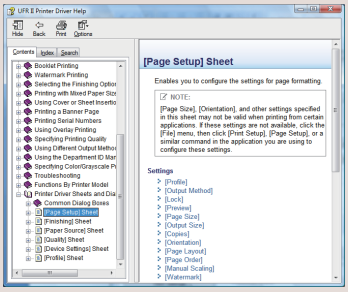

4 Start Printing

After specifying the settings, click [OK].

Click [OK].

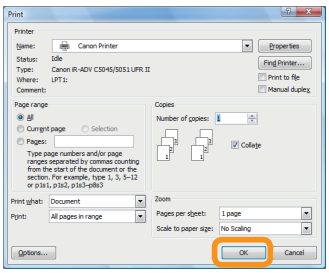

When printing is complete, collect the output.

The print job status can be checked from the Remote UI. For more information, see p. 50 in this manual.

Loading Paper

This section describes how to load paper into the paper drawers.

NOTE

- The following paper sizes can be loaded into Paper Drawers 1, 2, 3, and 4.
  - Paper Drawers 1: A3, B4, A4, A4R, B5, B5R, A5R, or Custom size (148 mm x 182 mm to 297 mm x 420 mm)
  - Paper Drawer 2: 305 x 457 mm, A3, B4, A4, A4R, B5, B5R, A5R, Custom size (140 mm x 182 mm to 304 mm x 457 mm), or Envelopes
  - Paper Drawer 3,4: 305 x 457 mm, A3, B4, A4, A4R, B5, B5R, A5R, or Custom size (140 mm x 182 mm to 304 mm x 457 mm)
  - Envelopes can be loaded into Paper Drawer 2 only if the Envelope Feeder Attachment-D1 is attached.
  - You can use Paper Drawers 3 and 4 only if the Cassette Feeding Unit-AF1 is attached.
  - If you are using the imageRUNNER ADVANCE C2020, depending on the region, Paper Drawer 2 is an optional product.
- For more information on the available paper stock that can be loaded into the paper drawers, see e-Manual > Basic Operations.

CAUTION

When loading paper, take care not to cut your hands on the edges of the paper.

Loading Paper

If the selected paper runs out, or the selected paper drawer runs out of paper during printing, a screen prompting you to load paper appears on the touch panel display.
Follow the procedure below to load paper into the paper drawers.

IMPORTANT

- A screen prompting you to load paper also appears if the selected paper drawer is not fully inserted into the machine. Make sure that the paper drawer is properly in place.
- Do not load the following types of paper into the paper drawers. Doing so may cause a paper jam.
  - Severely curled or wrinkled paper
  - Thin straw paper
  - Transparencies (Only for Paper Drawer 1)
  - Paper which has been printed on using a thermal transfer printer (Do not print on the reverse side of this paper either.)
- Fan the stack of paper well before loading it. Paper such as thin paper, recycled paper, pre-punched paper, heavy paper, and transparencies should be fanned particularly well before loading it.
- Never place paper or any other items in the empty part of the drawer next to the paper stack. Doing so may cause a paper jam.

NOTE

- If a message prompting you to load paper appears during printing, the remaining prints are automatically made after you load the correct paper. If you select another paper drawer, the remaining prints are made after you press [OK].
- To cancel printing, press [Stop].

1 Open the paper drawer.

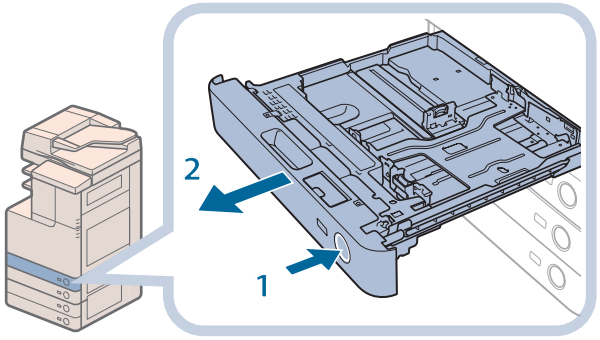

1. **Press and release the button on the paper drawer in which you want to load paper.**
2. **Grip the handle, and pull out the paper drawer until it stops.**

2 Prepare the paper.

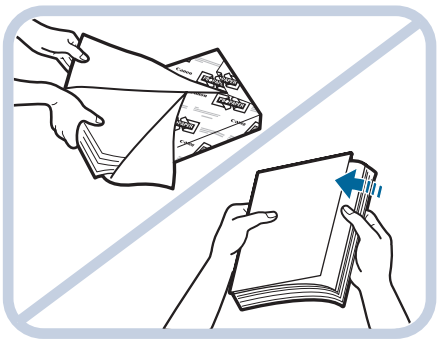

1. **Open a package of paper, and remove the paper stack.**

NOTE

- For high-quality printouts, use paper recommended by Canon.
- Before loading paper, always fan the sheets several times, and align the edges to facilitate feeding.

3 Load the paper.

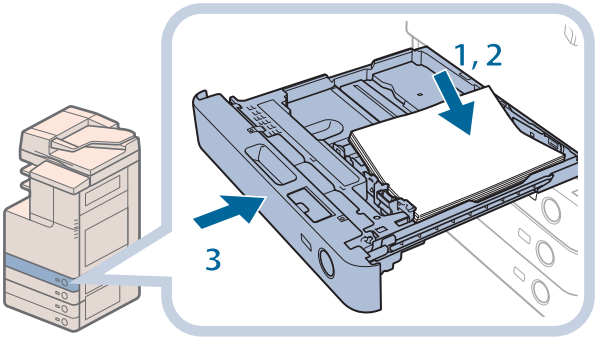

1. **Make sure that the paper size plate of the paper drawer matches the size of the paper loaded in the paper drawer.**
2. **Load the paper stack against the right wall of the paper drawer.**
3. **Gently push the paper drawer back into the machine until it clicks into place in the closed position.**

CAUTION

When returning the paper drawer to its original position, be careful not to get your fingers caught, as this may result in personal injury.

IMPORTANT

- Paper which has been rolled or curled must be straightened out before loading it into the paper drawer.
- You will not be able to make copies or print if you load paper that exceeds the loading limit (), or if the paper drawer is not completely pushed into the machine.
- Always check that the paper drawers are in place, and that the paper does not exceed the loading limit ().

NOTE

- When loading paper into the paper drawer for the first time, set the paper size dial to match the paper size being loaded. (See "Adjusting a Paper Drawer to Hold a Different Paper Size" on p. 56.)
- The following paper sizes and number of sheets can be loaded in Paper Drawers 1 and 2:
  - Paper Drawer 1: 250 sheets (80 g/m2) or 270 sheets (64 g/m2)
  - Paper Drawer 2: 550 sheets (80 g/m2) or 680 sheets (64 g/m2)
  - If you are using the imageRUNNER ADVANCE C2020, depending on the region, Paper Drawer 2 is an optional product.
- If there are instructions on the package of paper about which side of the paper to load, follow those instructions.
- When the paper is loaded into the paper drawer, the side facing up is the one printed on.
- If problems occur, such as poor print quality or paper jams, try turning the paper stack over, and reload it.
- For more information on the print direction of preprinted paper (paper which has logos or patterns already printed on it), see e-Manual > Copy.
- Rewrap any remaining paper in its original package, and store it in a dry place, away from direct sunlight.
- If paper runs out during copying or printing, load a new paper stack, and follow the instructions on the touch panel display. The machine automatically restarts, and produces the remaining copies or prints.
- If paper runs out and printing is stopped, load a new paper stack. Printing restarts after the new paper stack is loaded.

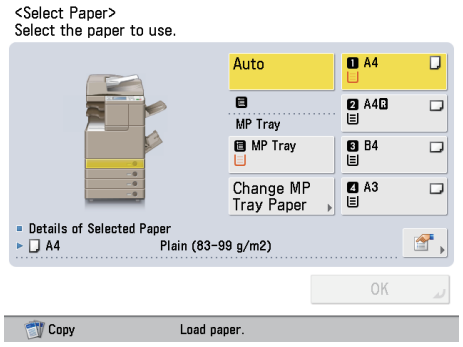

Adjusting a Paper Drawer to Hold a Different Paper Size

When loading paper of a different size into a paper drawer, follow the procedure below to adjust the paper drawer guides.

CAUTION

When loading paper, take care not to cut your hands on the edges of the paper.

1 Remove the paper.

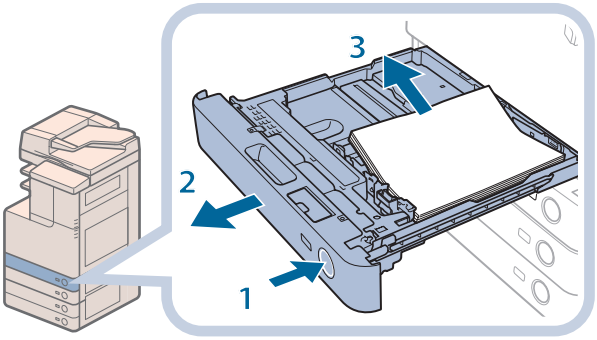

1. **Press and release the button on the paper drawer in which you want to adjust.**
2. **Grip the handle, and pull out the paper drawer until it stops.**
3. **Remove all of the remaining paper.**

2 Adjust the position of the paper drawer guides.

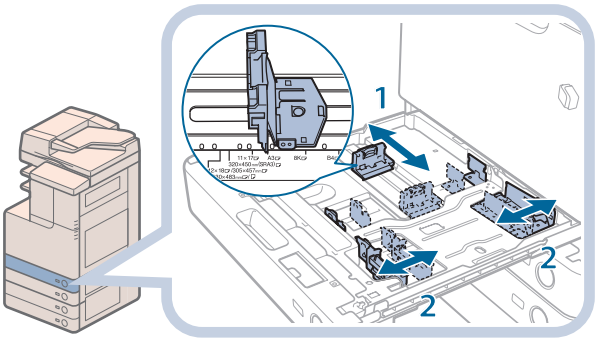

1. **Slide the left guide while squeezing it on the top to align it with the mark for the desired paper size.**
2. **Slide the front guide while squeezing it on the top to align it with the mark for the desired paper size.**

IMPORTANT

Slide the guides until they click into place. If the left guide and front guide are not aligned correctly, the paper size will not appear on the touch panel display correctly. It is also necessary to adjust the guides correctly to avoid causing a paper jam, dirty prints, or making the inside of the machine dirty.

3 Load the appropriate size paper into the paper drawer.

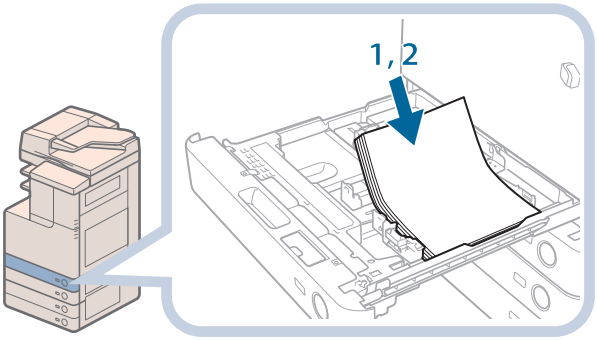

1. Make sure that the paper size plate of a paper drawer matches the size of the paper loaded in the paper drawer.
2. Load the paper stack against the right wall of the paper drawer.

4 Change the paper drawer's paper size plate to match the new paper size.

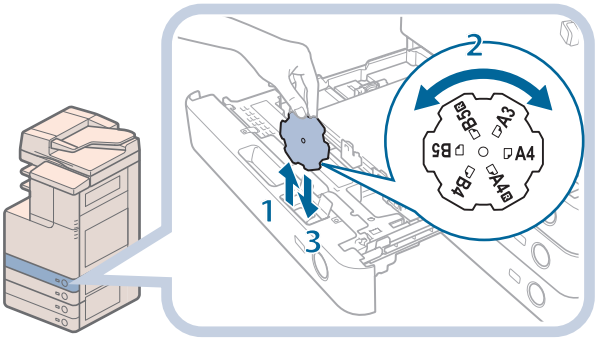

1. Open the inside cover of the paper drawer, and lift up the label.
2. Rotate the label so that the new paper size is on the right side of the label.
3. Insert the label straight down, and close the inside cover.

5 Gently push the paper drawer back into the machine until it clicks into place in the closed position.

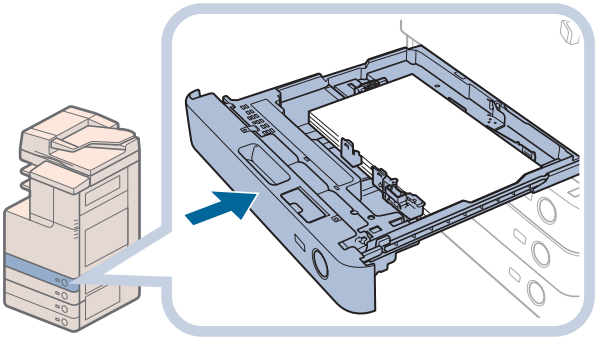

CAUTION

When returning the paper drawer to its original position, be careful not to get your fingers caught, as this may result in personal injury.

Envelope Feeder Attachment-D1 (Optional)

This section explains how to use the Envelope Feeder Attachment-D1.

IMPORTANT

The Envelope Feeder Attachment-D1 can only be attached to Paper Drawer 2.

How to Use the Envelope Feeder Attachment

The following types of envelopes can be loaded into the envelope feeder attachment: COM10 No.10, Monarch, DL, and ISO-C5.
The setting of the machine and guide size is set to COM10 No. 10 as the default setting.

IMPORTANT

- When you attach the envelope feeder attachment to the paper drawer, do not forcefully move the front guide of the paper drawer in the wrong direction. Doing so may detach the envelope feeder attachment from the paper drawer.
- Do not print on both sides of an envelope. Doing so may cause paper jams, dirty prints, or make the inside of the machine dirty.
- Do not load the following types of envelopes inside the envelope cassette. Doing so may cause paper jams, dirty prints, or make the inside of the machine dirty.
  - Curled, creased, or folded envelopes
  - Very thick or thin envelopes
  - Damp or wet envelopes
  - Torn envelopes
  - Irregularly shaped envelopes
  - Envelopes with clasps or windows
  - Envelopes that have already been sealed
  - Envelopes with holes or perforations
  - Envelopes with specially coated surfaces
  - Envelopes made of surface treated colored paper
  - Envelopes that are self-sticking, which use ink, glue, or other substances that can melt, burn, vaporize, or emit smells under the heat of a fixing unit (approximately 200 °C). Depending on the materials used for the seal, the glue may melt under the fixing unit's heat, sealing the envelopes.
- When the envelope cassette is attached and envelope is selected for the paper type, the envelope is ejected to the tray under the scanner unit.
- If you are printing on envelopes, empty the output tray when up to 10 printed envelopes accumulate in the tray.
- Envelopes should be stored in a place away from high-temperatures and humidity.
- If there is a temperature difference between the location where the envelopes are stored and the location where the envelopes are being printed, leave the envelopes in the printing location at room temperature before you use them.
- Correctly match the paper size dial, size switch, and Register Envelope Drawer in Preferences (Settings/Registration) with the size of the envelopes being loaded. Failure to do so may cause paper jams, dirty prints, or make the inside of the machine dirty.
- If you want to adjust the width guides to load ISO-C5 envelopes, contact your local authorized Canon dealer.

NOTE

- For more information on envelope types that can be loaded in the envelope feeder attachment, see e-Manual > Basic Operations.
- Sizes of the envelopes are as follows:
  - COM10 No.10: 104.7 mm x 241.3 mm
  - Monarch: 98.4 mm x 190.5 mm
  - DL: 110 mm x 220 mm
  - ISO-C5: 162 mm x 229 mm

Preparing the Envelopes

This section explains how to prepare the envelopes before loading them into the paper drawer.

IMPORTANT

Using curled, creased, or folded envelopes may cause paper jams. Load envelopes after following the procedure below

1 Neatly align the envelopes.

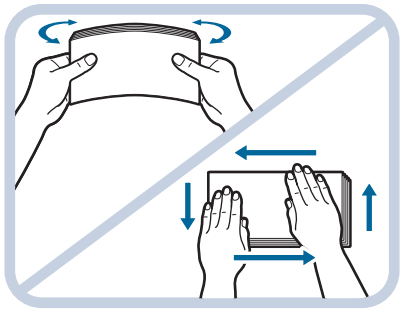

1. **Place the envelopes on a clean, level surface, and press all the way around the envelopes by hand, in the direction of the arrows, to remove any curls.**

Repeat this step five times for each set of five envelopes.

2 Hold down the four corners of the envelopes firmly, so that they and the sealed or glued portion stay flat.

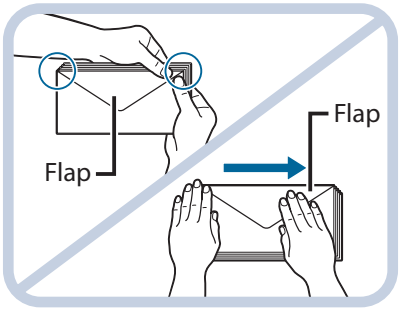

IMPORTANT

- If you use envelopes that have glue attached to their flaps, the glue may melt due to the heat and pressure of the fixing unit.
- Take particular care to spread the envelopes out in the direction that they will be fed.
- Do not print on the back side of the envelopes (the side with the flap).
- If the envelopes become filled with air, flatten them by hand before loading them into the envelope feeder attachment.

Loading Envelopes

This section explains how to load envelopes into Paper Drawer 2.

1 Open the drawer.

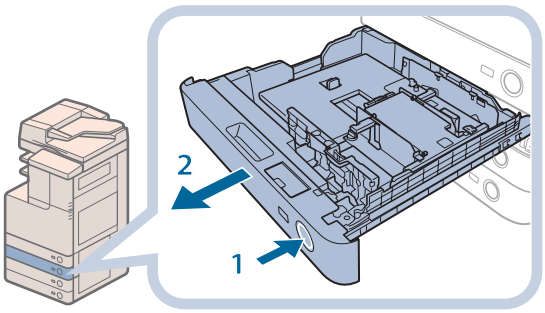

1. Press and release the button on Paper Drawer 2.
2. Grip the handle, and pull out the paper drawer until it stops.

2 Load the envelopes into the drawer.

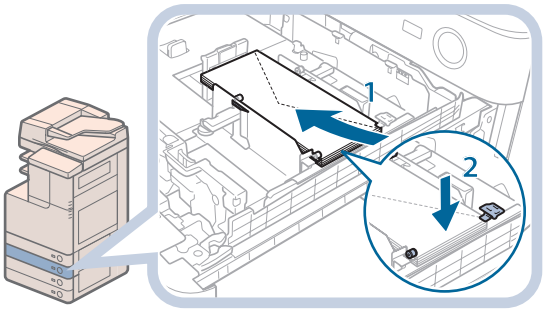

1. Load 10 envelopes at a time with the side you want to print on facing up. While loading the envelopes, press down on the left side of the receptacle to lock them into place.
2. Align the leading edges of the envelopes, and make sure that they are held in place under the claws.

3 Load the envelopes as shown below.

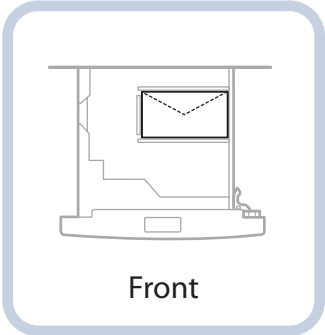

IMPORTANT

- Envelopes which have been rolled or curled must be straightened out prior to use.
- Make sure that the height of the envelope stack does not exceed the height limit mark ( ).
- The maximum height (quantity) of envelopes that can be loaded into the cassette is approximately 30 mm.
- The maximum height (quantity) of envelopes varies, depending on the envelope type and user operating conditions, but as a reference, 30 mm is approximately 50 envelopes.

4 Gently push the paper drawer back into the machine until it clicks into place in the closed position.

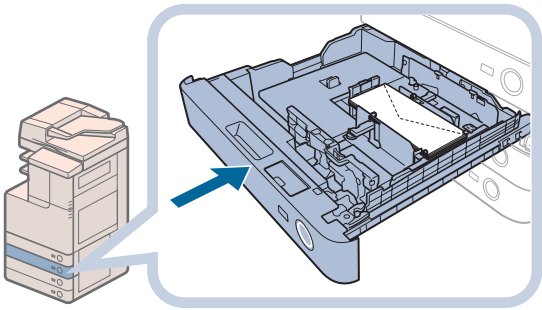

CAUTION

When returning the paper drawer to its original position, be careful not to get your fingers caught, as this may result in personal injury.

IMPORTANT

Never place paper or any other items in the empty part of the paper drawer next to the envelopes. Doing so may cause paper jams.

NOTE

If output has been stopped due to an insufficient number of envelopes, load more envelopes, and follow the instructions on the touch panel display. Printing resumes.

Loading the Envelope after Specifying the Size

This section explains how to load the envelopes that are specified in Settings/Registration into the envelope cassette.

IMPORTANT

Make sure that you change the envelope settings from the Settings/Registration screen before carrying out the following procedure. (See e-Manual > Settings/Registration.) Otherwise, the machine may not recognize the changes you have made.

1 Open the drawer.

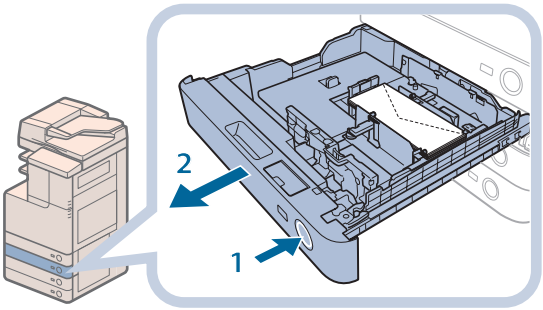

1. Press and release the button on Paper Drawer 2.
2. Grip the handle, and pull out the paper drawer until it stops.

2 Remove the drawer and envelopes.

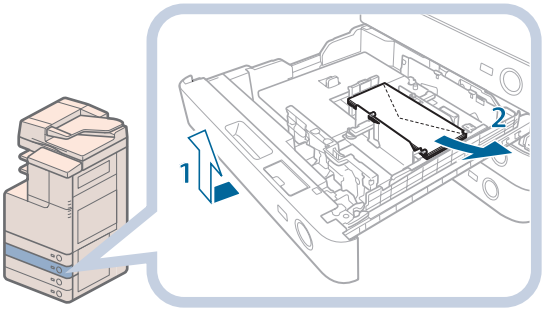

1. Pull and lift the paper drawer out of the machine by holding its left and right sides with both hands.
2. Remove the envelopes that are loaded in the paper drawer (several envelopes at a time).

3 Slide the left guide to align it with the mark for the desired envelope size.

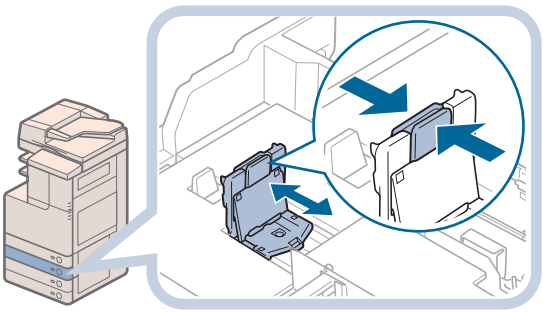

4 Adjust the front guide.

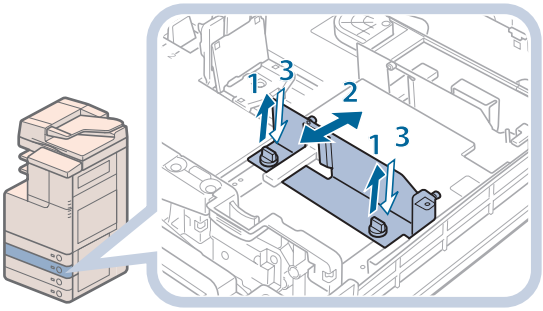

1. Loosen the two screws fixing the front width guide of the envelope feeder attachment.
2. Press down on the envelope receptacle, and move the front width guide to align it with the mark for the desired envelope size.
3. Fix the front width guide in place with the screws.

5 Adjust the rear width guide in the same way as in step 4.

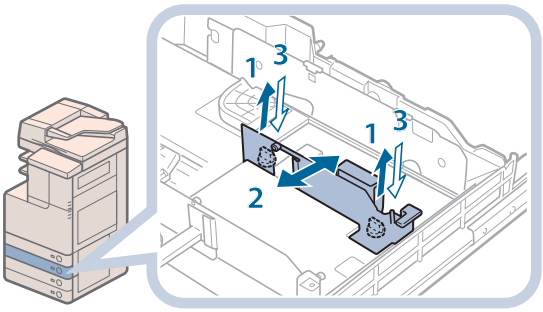

6 Load the envelopes.

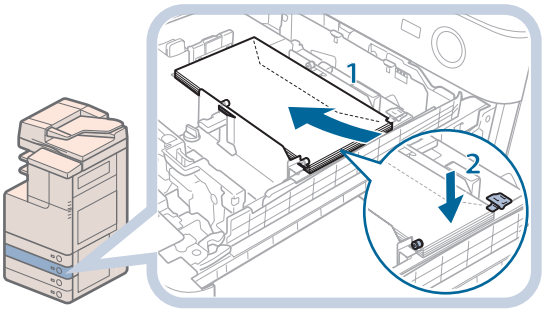

1. Load 10 envelopes at a time with the side you want to print on facing up. While loading the envelopes, press down on the left side of the receptacle to lock them into place.
2. Align the leading edges of the envelopes, and make sure that they are held in place under the claws.

7 Load the envelopes as shown below.

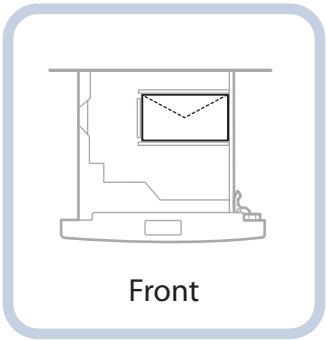

IMPORTANT

- Envelopes which have been rolled or curled must be straightened out prior to use.
- Make sure that the height of the envelope stack does not exceed the height limit mark ( ).
- The maximum height (quantity) of envelopes that can be loaded into the cassette is approximately 30 mm.
- The maximum height (quantity) of envelopes varies, depending on the envelope type and user operating conditions, but as a reference, 30 mm is approximately 50 envelopes.

NOTE

For details on how to change the registered envelope information for the drawer, see e-Manual > Settings/Registration.

8 Insert the drawer.

1. **Gently push the paper drawer back into the machine until it clicks into place in the closed position.**
2. **Check the paper size dial, andthen register the envelope size in Settings/Registration.**

   For details on how to register envelope sizes, see e-Manual > Settings/Registration.

CAUTION

When returning the paper drawer to its original position, be careful not to get your fingers caught, as this may result in personal injury.

IMPORTANT

Never place paper or any other items in the empty part of the paper drawer next to the envelopes. Doing so may cause paper jams.

NOTE

If output has been stopped due to an insufficient number of envelopes, load more envelopes, and follow the instructions on the touch panel display. Printing resumes.

Feeder (DADF-AC1)

Originals sent by fax or the Scan and Send function via the feeder, can be stamped to indicate that they have been sent. Replace the stamp cartridge when the stamp is faint or no longer visible.

CAUTION

When replacing the stamp cartridge, take care not to allow ink to come into contact with your hands or clothing. If ink gets onto you hands or clothing, wash it off immediately with cold water.

NOTE

Depending on the region, the feeder is an optional product.

Replacing the Stamp Cartridge

1

Open the feeder covers.

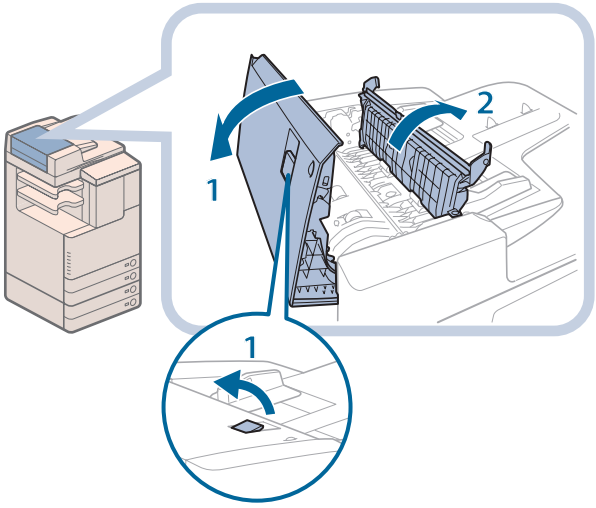

1. **Pull the lever, and open the feeder cover.**
2. **Open the inner cover, holding it by its tab.**

2 Load the stamp cartridge.

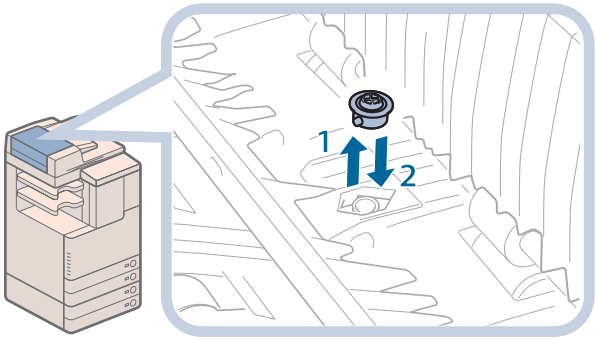

1. **Remove the old stamp cartridge, using tweezers.**
2. **Push in the new stamp cartridge until it clicks, using tweezers.**

IMPORTANT

- Make sure that the stamp cartridge is not protruding from the surface.
- Insert the stamp cartridge properly, or paper jams may occur.

3 Close the covers.

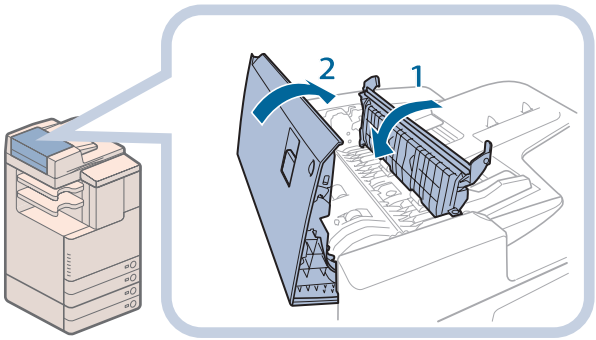

1. **Close the inner cover.**
2. **Close the feeder cover.**

CAUTION

When closing the covers, be careful not to get your fingers caught, as this may result in personal injury.

Inner Finisher-C1

This section describes the procedure for replacing the staple cartridge in the Inner Finisher-C1.

NOTE

- The Inner Finisher-C1 is an optional product.
- We recommend that you order staple cartridges from your local authorized Canon dealer before your stock runs out.

Replacing the Staple Cartridge

1 Pull out the staple case from the finisher.

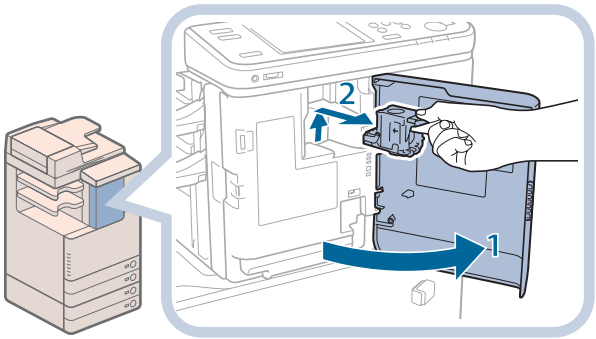

1. Open the front cover of the finisher.
2. Lift and pull out the staple case from the stapler unit, holding it by the green tab.

2 Pull out the staple cartridge from the staple case.

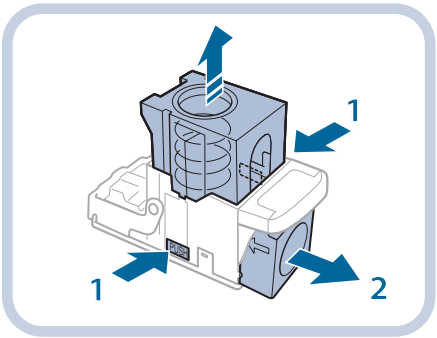

1. Press the areas indicated by PUSH on both sides of the staple case.
2. Once you have released the spring-loaded case, pull out the staple cartridge.

3 Insert a new staple cartridge into the staple case.

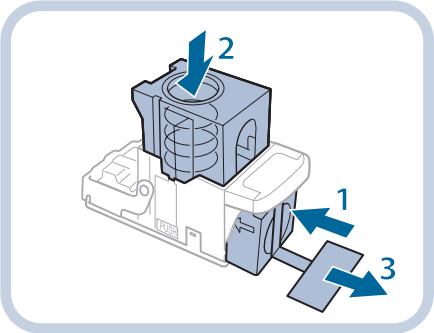

1. **Insert the new staple cartridge.**
2. **Press the spring-loaded case down until it clicks into place.**
3. **Remove the seal holding the staples together, by pulling it straight out.**

IMPORTANT

- Use only staple cartridges intended for use with this machine.
- Do not remove the seal that holds the staples together before you place the staple cartridge into the staple case.
- Only one staple cartridge can be inserted at a time.
- Make sure that you pull the seal straight out. If you pull it out at an angle, it may tear.

4 Insert the staple case into the finisher.

1. **Gently push the staple case back into the finisher, and push down firmly until it is securely in place.**
2. **Close the front cover of the finisher.**

CAUTION

When closing the covers, be careful not to get your fingers caught, as this may result in personal injury.

NOTE

After the cover is closed, the stapler unit may automatically perform a "dry" stapling operation to reposition the staples.

Replacing the Toner Cartridge

When there is only a small amount of toner remaining inside the machine, the message appears on the touch panel display. You can continue printing, but at this time you should purchase a new toner cartridge to have it available when needed.
When the toner run out completely and prints can no longer be made, a screen with instructions on how to replace the toner cartridge appears on the touch panel display. Follow the procedure described below to replace the toner cartridge.
If you press [Close], you can continue operations, such as setting modes and scanning originals, even if you do not replace the toner cartridge immediately.

WARNING

Do not burn or throw used toner cartridges into open flames, as this may cause the toner remaining inside the cartridges to ignite, resulting in burns or a fire.

CAUTION

- **Keep toner out of the reach of small children.**
- **If toner is ingested, consult a physician immediately.**
- **Take care not to allow toner to come into contact with your hands or clothing. If toner gets onto your hands or clothing, wash it off immediately with cold water. Washing it off with warm water will set the toner, and make it impossible to remove the toner stains.**

IMPORTANT

- Use only toner cartridges intended for use with this machine.
- Do not replace toner cartridges until the message prompting you to do so appears.
- Do not attempt to replace the toner cartridge while the machine is printing.

NOTE

- When the message <Black Toner is low. Replacement not yet needed.> appears, approximately 1,000 pages can be printed. It is recommended that you get a new toner cartridge ready for replacement before the toner runs out.
- Complete instructions on how to replace the toner cartridge can be accessed by pressing [Previous] or [Next] on the touch panel display.
- If toner runs out during a print job, the remaining prints are made after you replace the toner cartridge.

1 Remove the displayed color's toner cartridge.

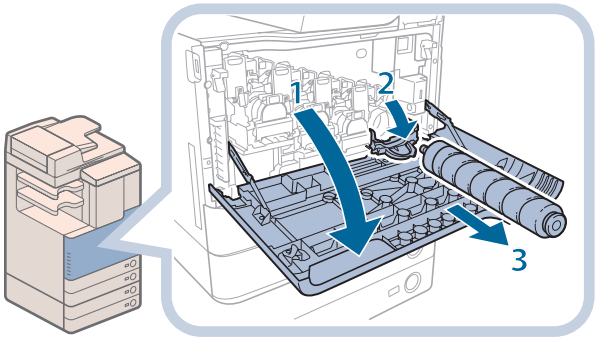

1. Open the front cover of the main unit.
2. Completely open the cover for the toner cartridge to replace.
3. Pull out the toner cartridge.

Pull the toner cartridge out halfway, and then remove it completely while supporting it and keeping it straight with your other hand from underneath.

WARNING

Do not burn or throw used toner cartridge into open flames, as this may cause the toner remaining inside the cartridges to ignite resulting in burns or a fire.

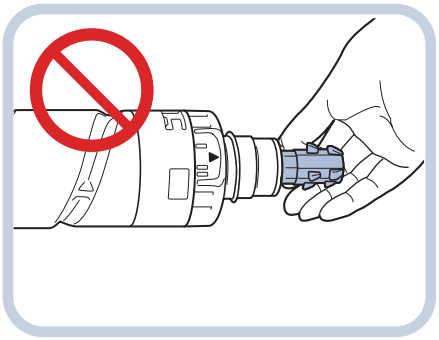

NOTE

Do not touch the tip of the toner cartridge or subject it to shock by hitting it. Doing so may cause the toner cartridge to leak.

2 Prepare the new toner cartridge.

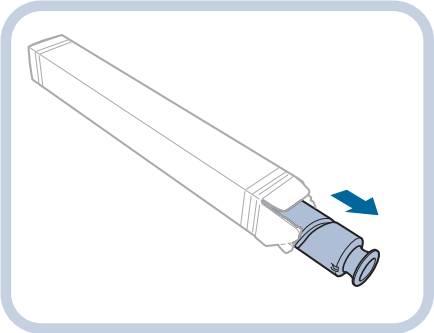

1. Open a package containing the indicated color's toner cartridge, and remove the toner cartridge.

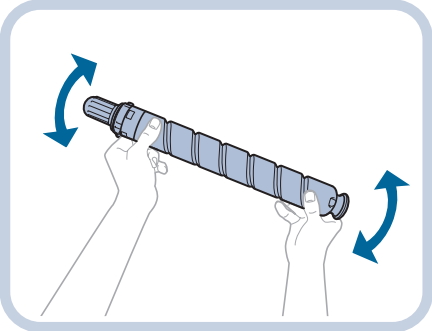

2. Hold the new toner cartridge in both hands, as shown on the left, and gently tilt it several times.

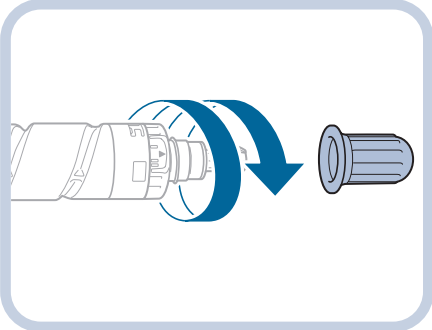

3. Remove the protective cap from the new toner cartridge.

Twist the protective cap of the new toner cartridge in the direction of the arrow to remove it.

3 Insert the new toner cartridge.

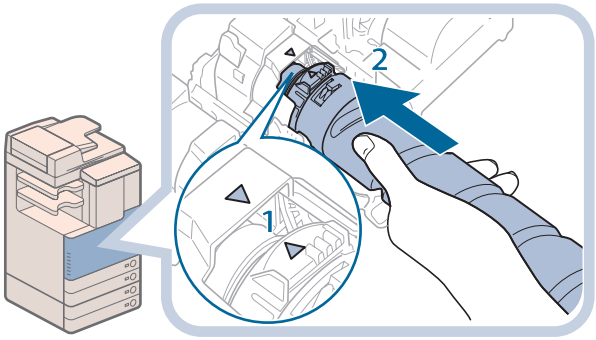

1. **Align the arrow on the ring near the end of the new toner cartridge with the arrow on the toner inlet of the machine, as indicated in the diagram.**
2. **Push the new toner cartridge in as far as possible.**

NOTE

Support the new toner cartridge with your hand from underneath while pushing it into the machine with your other hand.

4 Close the covers.

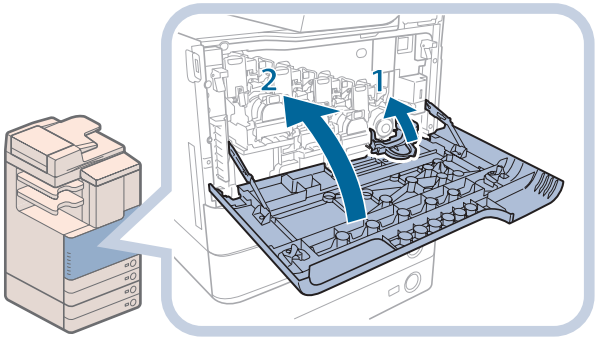

1 **Close the cover for the toner cartridge you replaced.**
2 **Close the front cover of the main unit.**

CAUTION

When closing the covers, be careful not to get your fingers caught, as this may result in personal injury.

Replacing the Waste Toner Container

When the waste toner container nears capacity, the message <Replace the waster toner container.> appears on the touch panel display. In this case, you should prepare a new waste toner container.
When the waste toner container is full, the instructions to replace the waste toner container appear on the touch panel display. Follow the instructions on the touch panel display, and the procedure described below to help you replace the waste toner container.
Even if you do not replace the waste toner container immediately, you can perform printing for a while. (The number of prints you can make depends on the content you are printing.)
However, if you continue printing, an error will occur and you will become unable to print.

WARNING

Do not burn or throw used waste toner containers into open flames. Also, do not store waste toner containers in places exposed to open flames, as this may cause the toner to ignite, resulting in burns or a fire.

IMPORTANT

- Your local authorized Canon dealer will dispose of the used waste toner container. Use the provided cover to cover up the opening of the used waste toner container.
- Used toner cannot be reused. Do not mix new and used toner together.
- Use only waste toner containers intended for use with this machine.
- Do not replace the waste toner container before the message prompting you to replace it appears on the touch panel display.

NOTE

- Complete instructions on how to replace the toner cartridge can be accessed by pressing [Previous] or [Next] on the touch panel display.
- If the waste toner container must be replaced during a print job, the remaining prints are made after the new waste toner container is installed.
- The waste toner container can be replaced while the machine is operating.

1 Pull out the waste toner container from the right rear side of the machine.

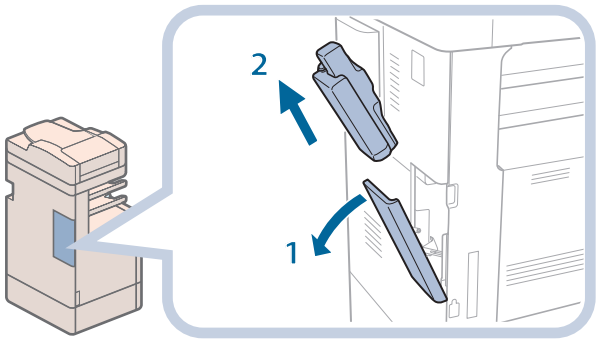

1. **Open the cover for the waste toner container.**
2. **Pull out the waste toner container.**

2 Cover up the opening of the used waste toner container.

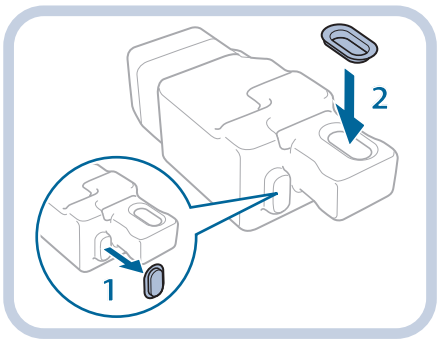

1. Remove the cover from the used waste toner container.
2. Use the provided cover to cover up the opening of the used waste toner container.

3 Insert the new waste toner container.

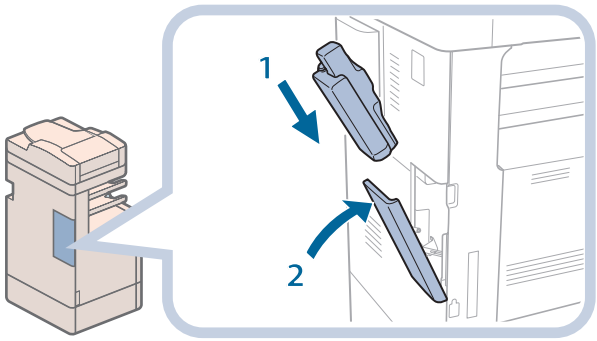

1. Insert the new waste toner container as shown on the left.
2. Close the cover for the waste toner container.

CAUTION

When closing the cover for the waste toner container, be careful not to get your fingers caught, as this may result in personal injury.

Routine Cleaning

If the original is not copied clearly, clean the following parts of the machine. For high-quality printouts, we recommend cleaning these parts once or twice a month.

- Platen glass
- Underside of the Feeder/Platen Cover
- Feeder's rollers

WARNING

- **When cleaning the machine, first turn OFF the main power switch, and disconnect the power cord. Failure to observe these steps may result in a fire or electrical shock.**
- **Disconnect the power cord from the power outlet regularly, and clean the area around the base of the power plug's metal pins and the power outlet with a dry cloth to ensure that all dust and grime is removed. If the power cord is connected for a long period of time in a damp, dusty, or smoky location, dust can build up around the power plug and become damp. This may cause a short circuit and result in a fire.**

IMPORTANT

- Do not dampen the cloth too much, as this may damage the original or break the machine.
- Do not use alcohol, benzene, paint thinner, or other solvents for cleaning. Doing so may result in damage to the plastic parts.

NOTE

Depending on the region, the feeder is an optional product.

Platen Glass and Underside of the Feeder/Platen Cover

If the platen glass or the underside of the feeder/platen cover is dirty, the original may not be scanned clearly, or the size of the original may be detected incorrectly.

1 **Clean the platen glass and the underside of the feeder/platen cover with a cloth dampened with water, and then wipe them with a soft, dry cloth.**

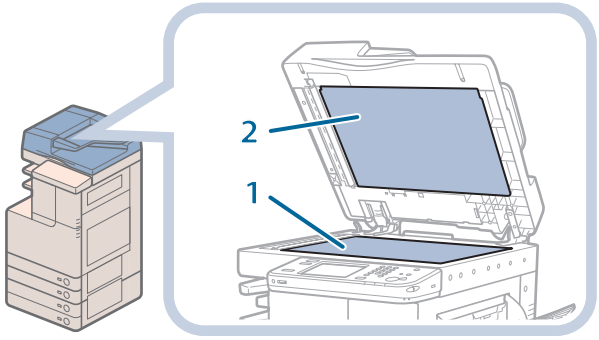

1. **Clean the Platen Glass.**
2. **Clean the underside of the Feeder/ Platen Cover.**

Manual Feeder Cleaning

If originals that have been fed through the feeder have streaks or appear dirty, clean the rollers of the feeder.
Clean the rollers of the feeder with a cloth dampened with water, and wipe them with a soft, dry cloth.

IMPORTANT

Spin the rollers while cleaning them.

1 Clean the rollers of the feeder.

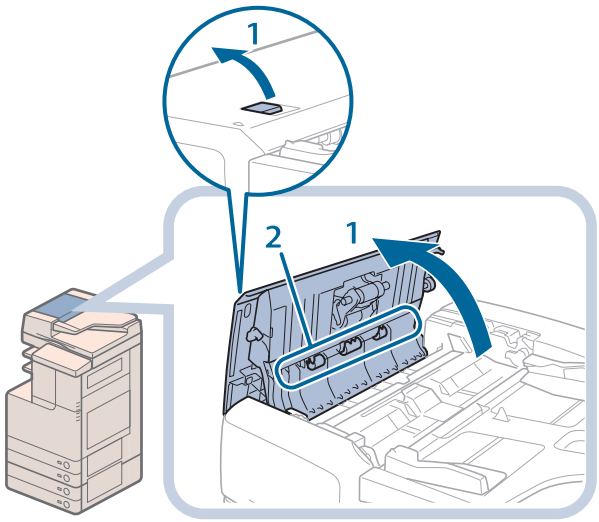

1. Pull the lever, and open the feeder cover.
2. Clean the rollers (a total of three places) inside the feeder cover.

2 Clean the rollers inside the inner cover.

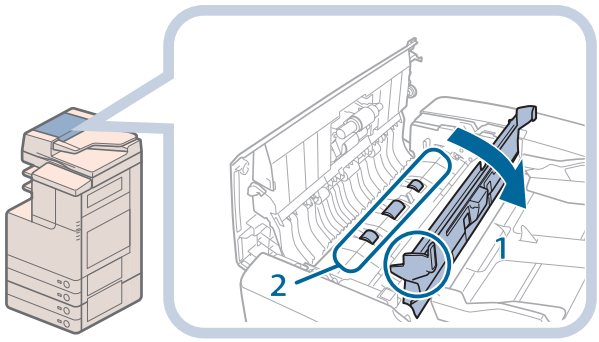

1. Open the inner cover, holding it by its tab.
2. Clean the rollers (a total of three places) inside the inner cover.

3 Clean the transparent plastic area on top of the inner cover.

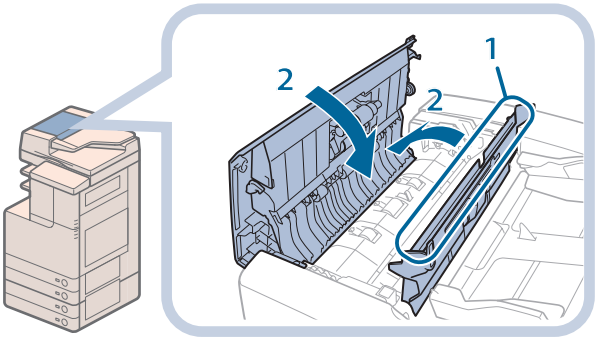

1. Clean the plastic area.
2. Close the inner cover, and then close the feeder cover.

CAUTION

When closing the covers, be careful not to get your fingers caught, as this may result in personal injury.

4 Clean the feeder's scanning area.

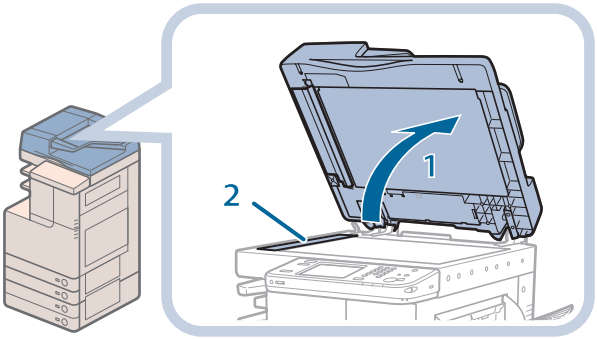

1. Open the feeder.
2. Clean the feeder's scanning area.

5 Clean the resin roller and the surrounding area.

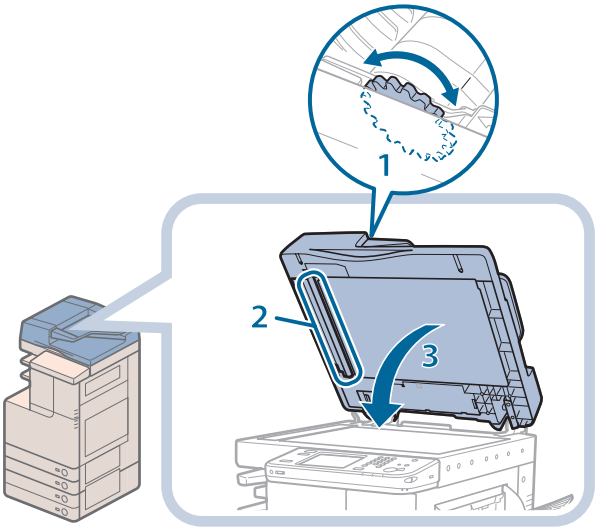

1. Turn the resin roller while turning the feed dial.
2. Clean the area while turning the resin roller.
3. Close the feeder.

CAUTION

When closing the feeder, be careful not to get your fingers caught, as this may result in personal injury.

Automatic Feeder Cleaning

If your originals have black streaks or appear dirty after scanning them through the feeder, perform an automatic feeder cleaning for the rollers of the feeder.

1 **Press (Settings/Registration).**

2 **Press [Adjustment/Maintenance] → [Maintenance] → [Clean Feeder].**

3 **Place 10 sheets of blank paper into the feeder → press [Start].**

It takes approximately 15 seconds to clean the feeder.

Use plain A4 paper.

When cleaning is complete, try scanning again.

Cleaning the Inside of the Main Unit

If streaks appear on printed output, or random parts of the printed image are missing, the inside of the main unit may be dirty. In this case, clean the inside of the main unit, as described below.

1 **Press (Settings/Registration).**

2 **Press [Adjustment/Maintenance] → [Maintenance] → [Clean Inside Main Unit].**

3 **Press [Start].**

It takes approximately 170 seconds to clean the inside of the main unit

When cleaning is complete, try printing again.

Consumables

The following consumables are available from Canon. For more information, contact your local authorized Canon dealer. We recommend that you order paper stock and toner from your local authorized Canon dealer before your stock runs out.

Recommended Paper

In addition to plain paper (A3, B4, A4, B5, and A5), recycled paper, color paper, transparencies (recommended for this machine), tracing paper, labels, and other types of paper stock are available. For more information, contact your local authorized Canon dealer.

CAUTION

Do not store paper in places exposed to open flames, as this may cause the paper to ignite, resulting in burns or a fire.

IMPORTANT

- To prevent moisture build-up, tightly wrap any remaining paper in its original package for storage.
- Some commercially available paper types are not suited for this machine. Contact your local authorized Canon dealer when you need to purchase paper.

NOTE

For high-quality printouts, use paper recommended by Canon.

Toner

If a message prompting you to replace the toner cartridge appears on the touch panel display, replace the used toner cartridge with a new one.

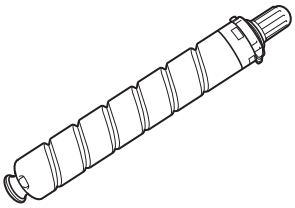

Black Toner

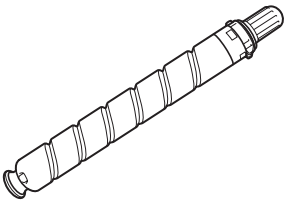

Cyan Toner, Magenta Toner, Yellow Toner

WARNING

- **Do not burn or throw used toner cartridges into open flames, as this may cause the toner remaining inside the cartridges to ignite, resulting in burns or a fire.**
- **Do not store toner cartridges in places exposed to open flames, as this may cause the toner to ignite, resulting in burns or a fire.**

CAUTION

Keep toner out of the reach of small children. If toner is ingested, consult a physician immediately.

IMPORTANT

- Store toner cartridges in a cool location, away from direct sunlight. (The recommended storage conditions are: temperatures below 30 °C, and humidity below 80 %.)
- [Be careful of counterfeit toners]
  Please be aware that there are counterfeit Canon toners in the marketplace. Use of counterfeit toner may result in poor print quality or machine performance. Canon is not responsible for any malfunction, accident or damage caused by the use of counterfeit toner.
  For more information, see http://www.canon.com/counterfeit.

Stamp Cartridge

The stamp cartridge is used to stamp originals. Use the tweezers provided to remove and replace the stamp cartridge.

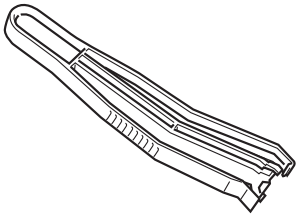

Stamp Ink Cartridge-C1

Clearing Paper Jams

If a paper jam occurs, the screen indicating the location of the paper jam and instructions on how to clear the paper jam appear on the touch panel display. Follow the instructions on the touch panel display. The screen indicating the location of the paper jam repeatedly appears on the touch panel display until the paper jam is entirely cleared.

Screen Indicating the Location of the Paper Jam

You can check the location of the paper jam on the touch panel display. If you press [Close], you can continue operations, such as setting modes and scanning originals, even if you do not remove the jammed paper immediately.

WARNING

There are some areas inside the machine which are subject to high-voltages. When removing jammed paper or when inspecting the inside of the machine, do not allow necklaces, bracelets, or other metal objects to touch the inside of the machine, as this may result in burns or electrical shock.

CAUTION

- **When removing jammed originals or paper which has become jammed inside the machine, take care not to cut your hands or injure yourself on the edges of the originals or paper. If you cannot remove the paper, contact your local authorized Canon dealer.**
- **When removing paper which has become jammed inside the machine, take care not to allow the toner on the jammed paper to come into contact with your hands or clothing. If ink gets onto you hands or clothing, wash it off immediately with cold water. Washing it off with warm water will set the toner, and make it impossible to remove the toner stains.**
- **When removing paper which has become jammed inside the machine, remove the jammed paper gently to prevent the toner on the paper from scattering and getting into your eyes or mouth. If the toner gets into your eyes or mouth, wash them immediately with cold water and immediately consult a physician.**
- **The fixing unit and its surroundings inside the machine may become hot during use. When removing jammed paper or when inspecting the inside of the machine, do not touch the fixing unit and its surroundings, as doing so may result in burns or electrical shock.**
- **After clearing all paper jams, remove your hands from the machine immediately. Even if the machine is not in operation, your hands, hair, or clothing may get caught in the feed rollers, which could result in personal injury or damage if the machine suddenly starts printing.**

IMPORTANT

- If a paper jam occurs in the feeder, you cannot continue operating the machine. Follow the directions on the touch panel display to clear the paper jam. (See "Feeder (DADF-AC1)," on p. 65.)
- If the MEAP screen is displayed, a message appears on the bottom line of the touch panel display. Press (Status Monitor/Cancel) → follow the procedures that appear on the touch panel display to help you remove the jammed paper.
- Some areas that are shown to have paper jams may not actually have paper jams. However, always check all locations indicated on the touch panel display in the order that is given.

NOTE

If paper is jammed in several locations, remove the jammed paper following the instructions displayed on the touch panel display.

Main Unit

Check the location of the paper jam, and follow the procedure described below, and the procedure that appears on the touch panel display, to remove the jammed paper.

When No Optional Tray or Finisher Is Attached

If the optional Inner 2 Way Tray-F1, Copy Tray-J1, or Inner Finisher-C1 is not attached, follow the instruction below to remove jammed paper.

NOTE

If paper is loaded in the multi-purpose tray, make sure to remove any paper from the multi-purpose tray first.

1 Open the paper drawer's upper right cover and lower right cover → check for paper jams.

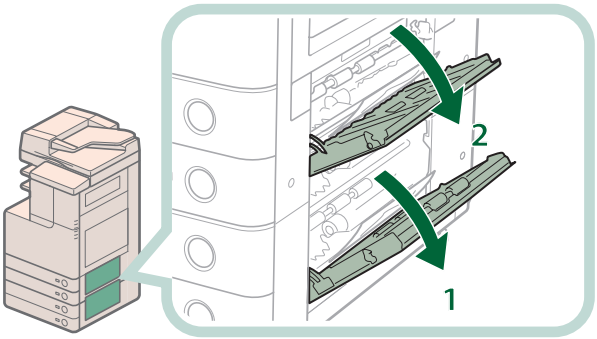

1. **Open the paper drawer's lower right cover.**
2. **Open the paper drawer's upper right cover.**

If there is any jammed paper, remove it → close the covers.

CAUTION

When closing the covers, be careful not to get your fingers caught, as this may result in personal injury.

NOTE

Gently close the upper right cover and lower right cover until they click into place in the closed positions.

2 Remove any jammed paper inside the lower right cover of the main unit.

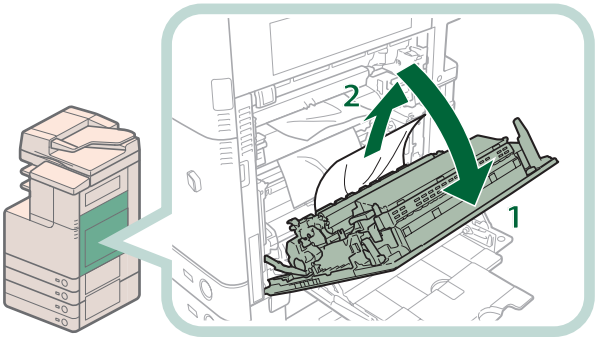

1. **Grip the handle, and open the lower right cover of the main unit.**
2. **Remove any jammed paper inside the lower right cover of the main unit.**

3 Remove any jammed paper protruding from the first output tray.

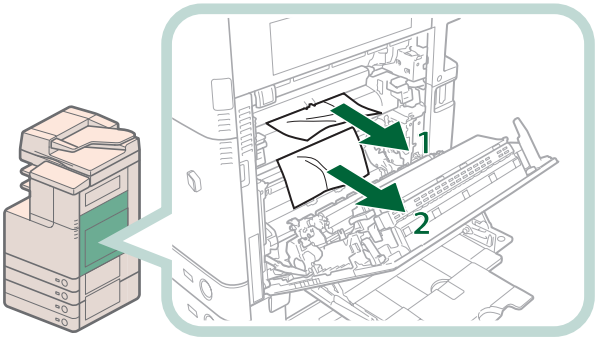

1. Remove any jammed paper in the upper part of the first output tray.
2. Remove any jammed paper in the lower part of the first output tray.

4 Remove any jammed paper from the multi-purpose tray inside the lower right cover of the main unit.

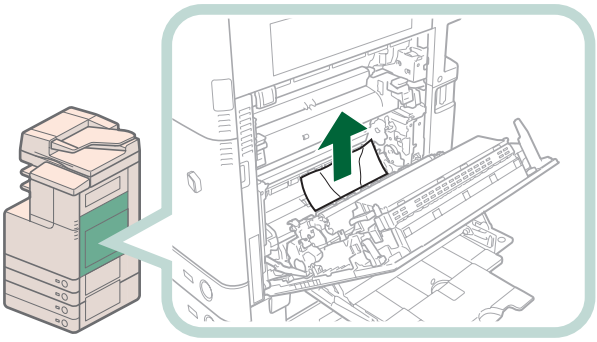

NOTE

If you cannot remove the jammed paper from the bottom of the multi-purpose tray, remove it from the multi-purpose tray side.

5 Remove any jammed paper in the duplexing unit.

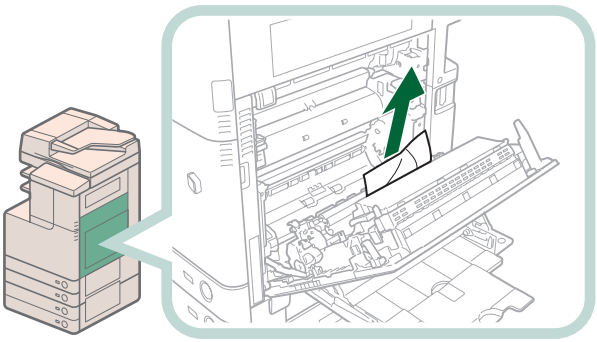

6 Close the lower right cover of the main unit.

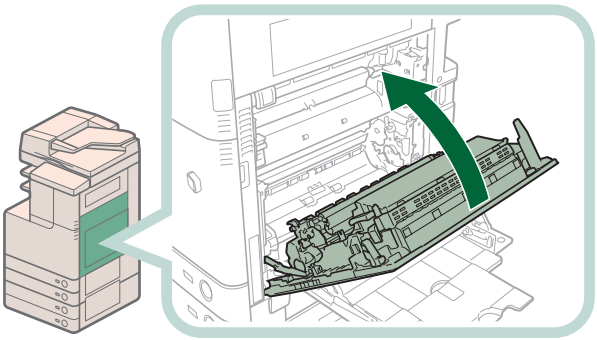

CAUTION

When closing the covers, be careful not to get your fingers caught, as this may result in personal injury.

NOTE

Gently close the lower right cover until it clicks into place in the closed position.

7 Follow the instructions on the touch panel display.

NOTE

The screen indicating the location of the paper jam repeatedly appears on the touch panel display until the paper jam is entirely cleared.

When an Optional Tray or Finisher Is Attached

If the optional Inner 2 Way Tray-F1, Copy Tray-J1, or Inner Finisher-C1 is attached, follow the instructions below to remove any jammed paper.

NOTE

If paper is loaded in the multi-purpose tray, make sure to remove any paper from the multi-purpose tray first.

1 Open the paper drawer's upper right cover and lower right cover → check for paper jams.

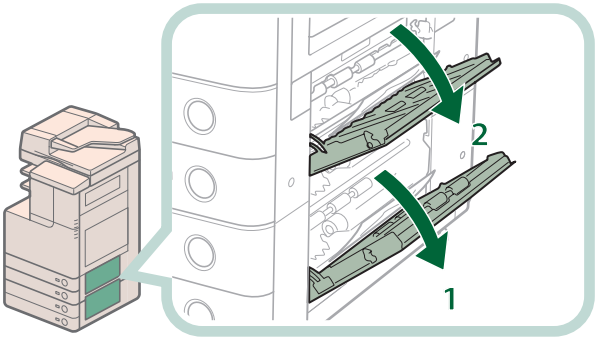

1. Open the paper drawer's lower right cover.
2. Open the paper drawer's upper right cover.

If there is any jammed paper, remove it → close the covers.

CAUTION

When closing the paper drawer's upper right cover, be careful not to get your fingers caught, as this may result in personal injury.

NOTE

Gently close the upper right cover and lower right cover until they click into place in the closed positions.

2 Remove any jammed paper inside the lower right cover and upper right cover of the main unit.

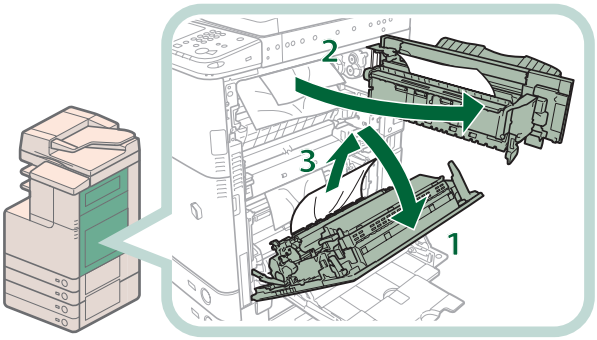

1. Grip the handle, and open the lower right cover of the main unit.
2. Grip the green handle, and open the upper right cover of the main unit.
3. Remove any jammed paper inside the lower right cover of the main unit.

3 Remove any jammed paper protruding from the first output tray.

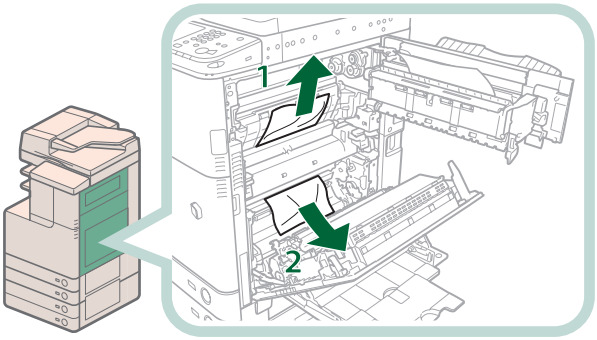

1. Remove any jammed paper on top of the fixing unit.
2. If you cannot pull it up, pull it out from the bottom.

4 Remove any jammed paper from the multi-purpose tray inside the lower right cover of the main unit.

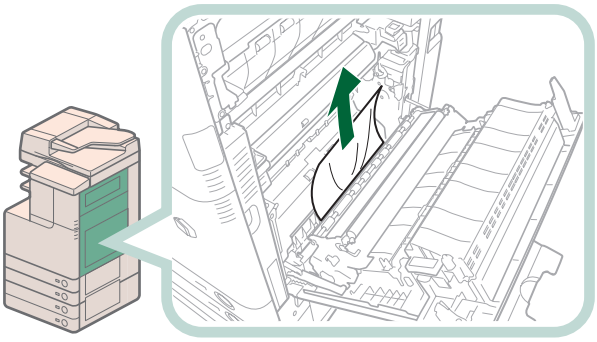

NOTE

If you cannot remove the jammed paper from the bottom of the multi-purpose tray, remove it from the multi-purpose tray side.

5 Remove any jammed paper protruding from the second output tray, reversing unit, and third output tray.

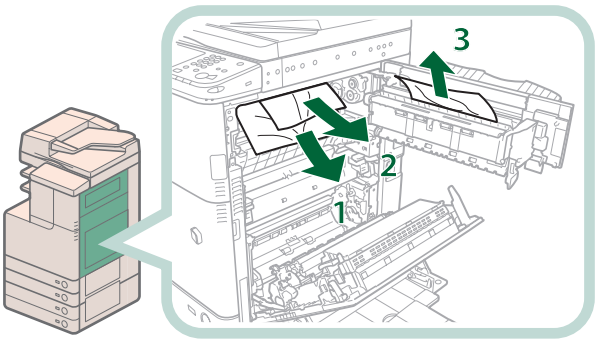

1. Remove any jammed paper in the second output tray.
2. Remove the jammed paper while pressing down the green reversing unit guide.
3. Remove any jammed paper in the third output tray.

6 Remove any jammed paper from the upper and/or lower parts of the duplexing unit.

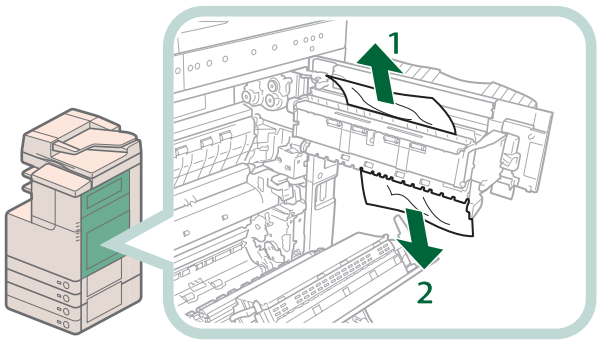

1. Remove any jammed paper in upper part of the duplexing unit.
2. Remove any jammed paper in lower part of the duplexing unit.

7 Remove any jammed paper in the duplexing unit.

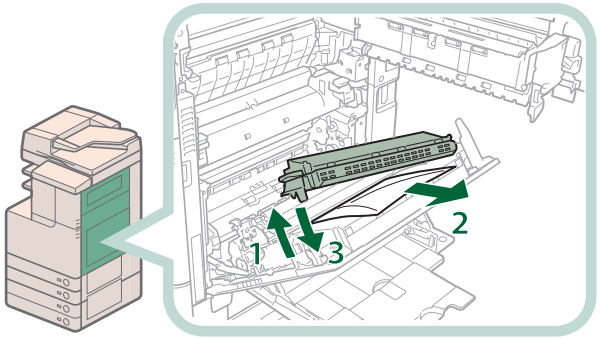

1. Lift the duplexing unit.
2. Remove any jammed paper.
3. Push the duplexing unit back into its original position.

8 Close the upper right cover and lower right cover of the main unit.

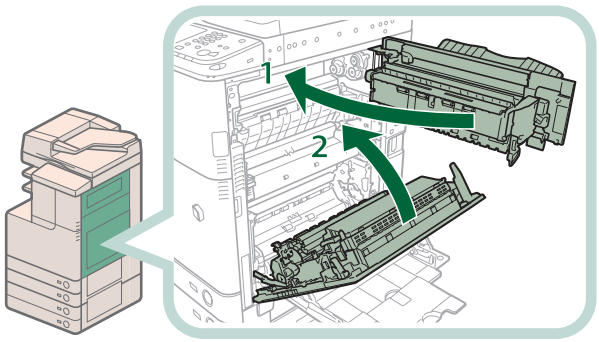

1. **Close the upper right cover of the main unit.**
2. **Close the lower right cover of the main unit.**

CAUTION

When closing the lower right cover of the main unit, be careful not to get your fingers caught, as this may result in personal injury.

IMPORTANT

Make sure you close the upper right cover of the main unit before you close the lower right cover of the main unit.

NOTE

Gently close the upper right cover and lower right cover until they click into place in the closed positions.

9 Follow the instructions on the touch panel display.

NOTE

The screen indicating the location of the paper jam repeatedly appears on the touch panel display until the paper jam is entirely cleared.

Paper Drawers

Check the location of the paper jam, and follow the procedure described below, and the procedure that appears on the touch panel display, to remove the jammed paper.

NOTE

For information on the paper jam removal procedure for paper drawer 1, follow the procedure from step 3.

- If you are using the imageRUNNER ADVANCE C2020, depending on the region, Paper Drawer 2 is an optional product.

1 Remove any jammed paper inside the paper drawer's upper right cover.

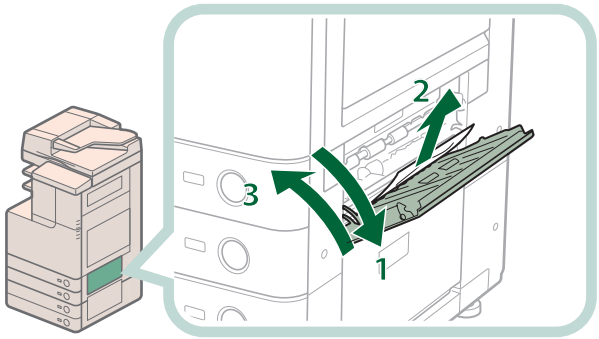

1. **Grip the handle, and open the paper drawer's upper right cover.**
2. **Remove any jammed paper.**
3. **Close the paper drawer's upper right cover.**

CAUTION

When returning the paper drawer to its original position, be careful not to get your fingers caught, as this may result in personal injury.

NOTE

Gently close the paper drawer's right cover until it clicks into place in the closed position.

2 Remove any jammed paper inside the lower right cover of the main unit.

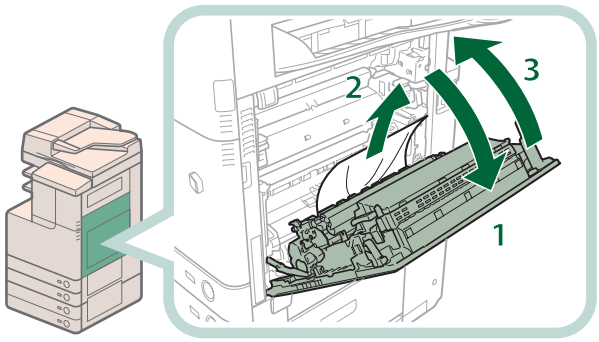

1. **Grip the handle, and open the lower right cover of the main unit.**
2. **Remove any jammed paper.**
3. **Close the lower right cover of the main unit.**

CAUTION

When closing the lower right cover of the main unit, be careful not to get your fingers caught, as this may result in personal injury.

NOTE

Gently close the lower right cover until it clicks into place in the closed position.

3 Remove any jammed paper inside the paper drawer.

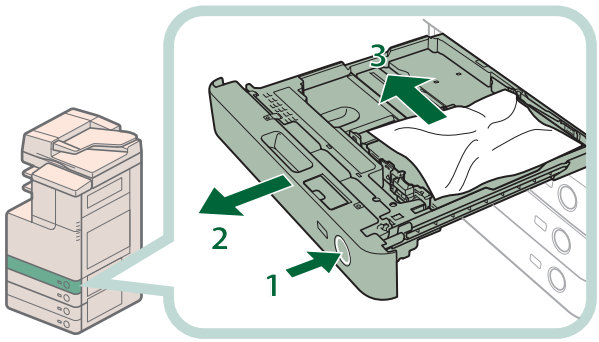

1. Press and release the button on the paper drawer.
2. Grip the handle, and pull out the paper drawer until it stops.
3. Remove any jammed paper.

4 Gently push the paper drawer back into the machine until it clicks into place in the closed position.

CAUTION

When closing the covers, be careful not to get your fingers caught, as this may result in personal injury.

5 Follow the instructions on the touch panel display.

NOTE

The screen indicating the location of the paper jam repeatedly appears on the touch panel display until the paper jam is entirely cleared.

Cassette Feeding Unit-AF1

Check the location of the paper jam, and follow the procedure described below, and the procedure that appears on the touch panel display, to remove the jammed paper.

NOTE

The Cassette Feeding Unit-AF1 is an optional product.

1 Open the paper drawer's upper right cover and lower right cover.

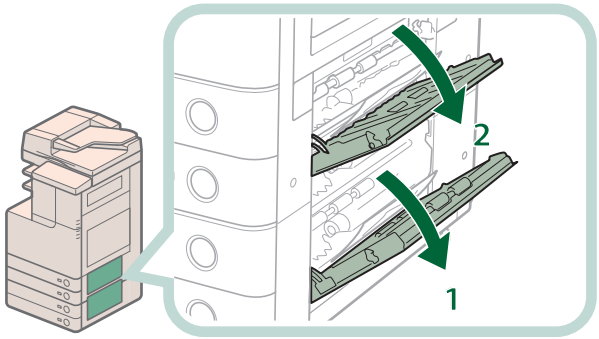

1. Open the paper drawer's lower right cover.
2. Open the paper drawer's upper right cover.

2 Remove any jammed paper inside the paper drawer's lower right cover and upper right cover.

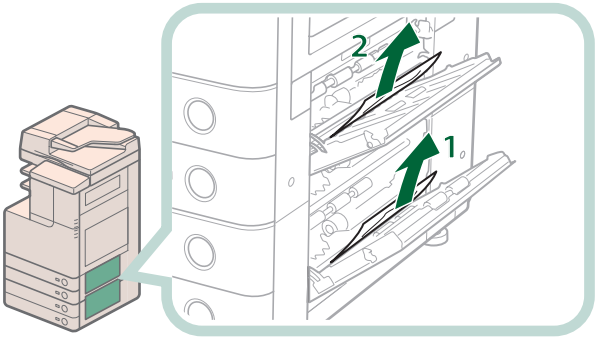

1. Remove any jammed paper inside the paper drawer's lower right cover.
2. Remove any jammed paper inside the paper drawer's upper right cover.

3 Remove any jammed paper inside the lower right cover of the main unit.

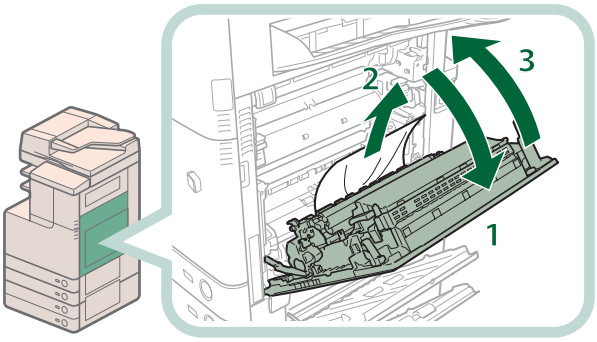

1. Open the lower right cover of the main unit.
2. Remove any jammed paper.
3. Close the lower right cover of the main unit.

CAUTION

When closing the covers, be careful not to get your fingers caught, as this may result in personal injury.

NOTE

Gently close the lower right cover until it clicks into place in the closed position.

4 Close the covers.

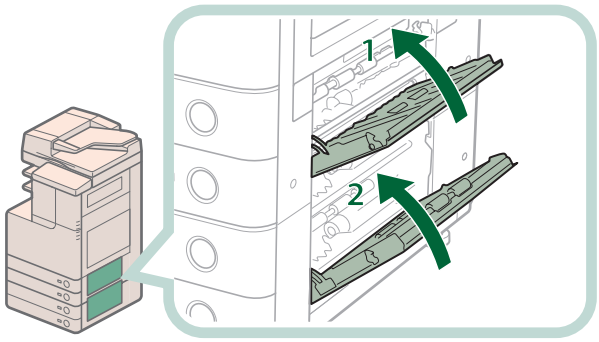

1. Close the paper drawer's upper right cover.
2. Close the paper drawer's lower right cover.

CAUTION

When returning the paper drawer to its original position, be careful not to get your fingers caught, as this may result in personal injury.

NOTE

Gently close the upper right cover and lower right cover until they click into place in the closed positions.

5 Remove any jammed paper inside the paper drawer.

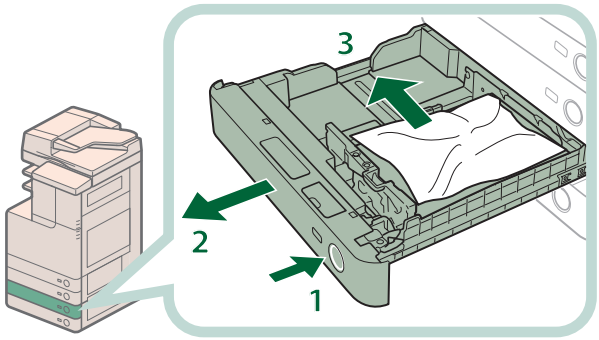

1. Press and release the button on the paper drawer.
2. Grip the handle, and pull out the paper drawer until it stops.
3. Remove any jammed paper.

6 Gently push the paper drawer back into the machine until it clicks into place in the closed position.

7 Follow the instructions on the touch panel display.

NOTE

The screen indicating the location of the paper jam repeatedly appears on the touch panel display until the paper jam is entirely cleared.

Feeder (DADF-AC1)

Check the location of the paper jam, and follow the procedure described below, and the procedure that appears on the touch panel display, to remove the jammed paper.

NOTE

If you are using the imageRUNNER ADVANCE C2020, depending on the region, the feeder is an optional product.

1 Remove any jammed paper inside the feeder cover.

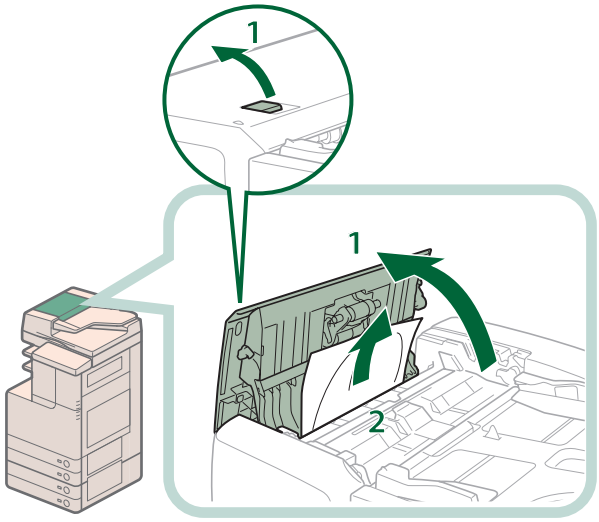

1. **Pull the lever, and open the feeder cover.**
2. **Remove any jammed paper.**

2 Open the inner cover, and remove any jammed paper.

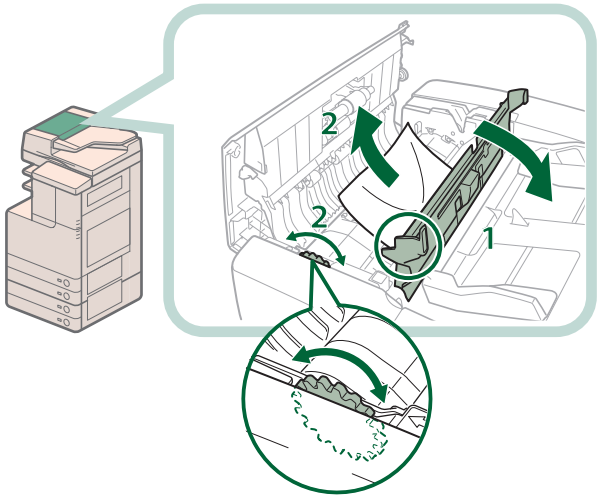

1. **Open the inner cover, holding it by its tab.**
2. **Turn the feed dial on the inner side of the feeder cover, and remove any jammed paper.**

3 Close the feeder covers.

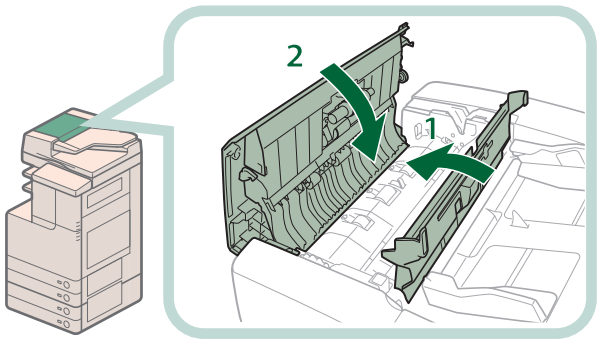

1. Close the inner cover.
2. Close the feeder cover.

CAUTION

When closing the feeder covers, be careful not to get your fingers caught, as this may result in personal injury.

4 Remove any jammed paper inside the feeder.

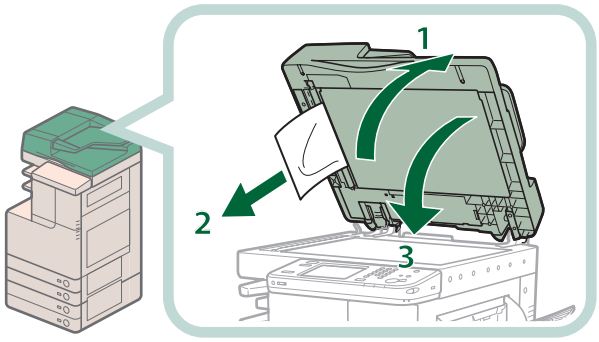

1. Lift the feeder.
2. Remove any jammed paper.
3. Close the feeder.

CAUTION

When closing the feeder, be careful not to get your fingers caught, as this may result in personal injury.

5 Follow the instructions on the touch panel display.

NOTE

The screen indicating the location of the paper jam repeatedly appears on the touch panel display until the paper jam is entirely cleared.

Inner Finisher-C1

Check the location of the paper jam, and follow the procedure described below, and the procedure that appears on the touch panel display, to remove the jammed paper.

NOTE

The Inner Finisher-C1 is an optional product.

1 Open the covers of the main unit.

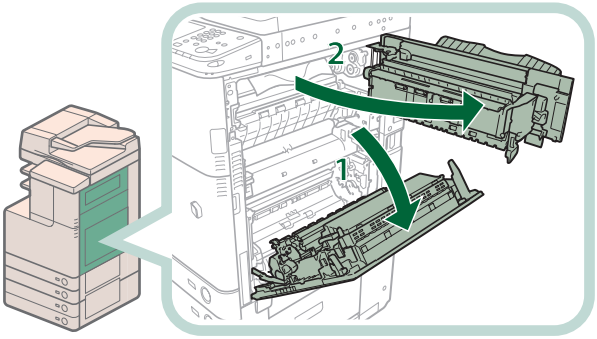

1. Grip the handle, and open the lower right cover of the main unit.
2. Grip the green handle, and open the upper right cover of the main unit.

2 Press down and hold the inner guide, and remove any jammed paper.

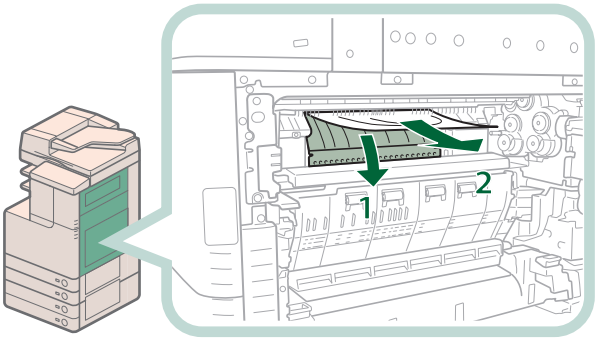

If there is paper jammed in a location other than the inner guide, follow the instructions in "When Optional Tray or Finisher Is Attached" in "Main Unit" to remove any jammed paper (see p. 86.)

3 Remove any jammed paper protruding from the output tray.

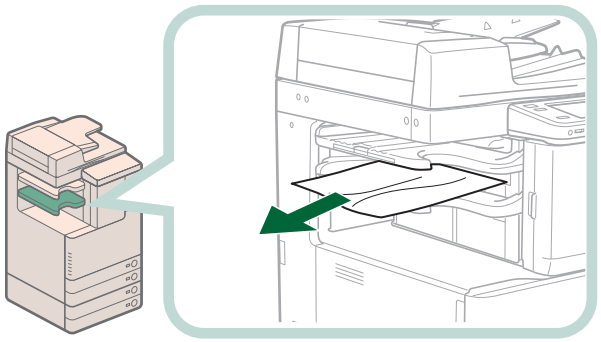

NOTE

If a paper jam occurs when you are printing in the Staple mode, do not remove the output sheets that are waiting to be stapled. Printing and stapling resume after you clear the paper jam.

4 Close the upper right cover and lower right cover of the main unit.

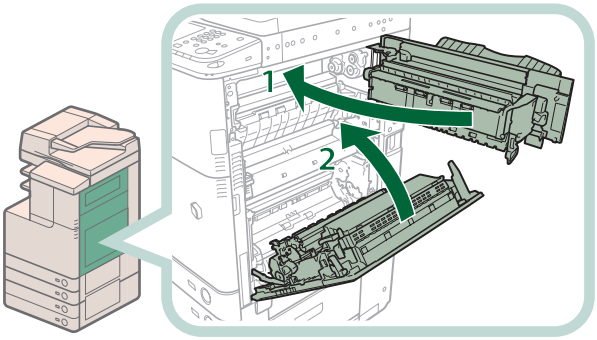

1. **Close the upper right cover of the main unit.**
2. **Close the lower right cover of the main unit.**

CAUTION

When closing the feeder, be careful not to get your fingers caught, as this may result in personal injury.

IMPORTANT

Make sure you close the upper right cover of the main unit before you close the lower right cover of the main unit.

NOTE

Gently close the lower right cover and upper right cover until they click into place in the closed positions.

5 Follow the instructions on the touch panel display.

NOTE

The screen indicating the location of the paper jam repeatedly appears on the touch panel display until the paper jam is entirely cleared.

Inner 2 Way Tray-F1

Check the location of the paper jam, and follow the procedure described below, and the procedure that appears on the touch panel display, to remove the jammed paper.

NOTE

The Inner 2 Way Tray-F1 is an optional product.

1 **Follow the instructions in "When an Optional Tray or Finisher Is Attached," on p. 86 to remove any jammed paper.**

2 **Remove any jammed paper protruding from the Inner 2 Way Tray.**

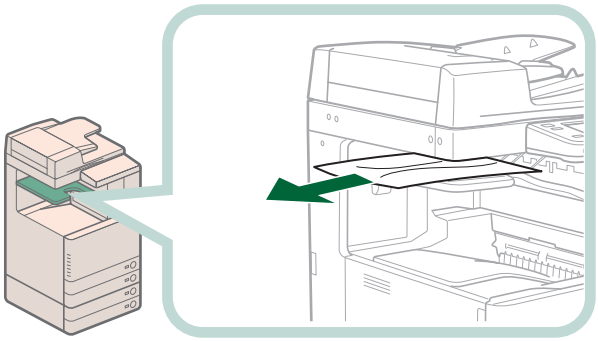

3 **Follow the instructions on the touch panel display.**

NOTE

The screen indicating the location of the paper jam repeatedly appears on the touch panel display until the paper jam is entirely cleared.

Copy Tray-J1

Check the location of the paper jam, and follow the procedure described below, and the procedure that appears on the touch panel display, to remove the jammed paper.

NOTE

The Copy Tray-J1 is an optional product.

1 Follow the instructions in "When an Optional Tray or Finisher Is Attached," on p. 86 to remove any jammed paper.

2 Remove any jammed paper protruding from the Copy Tray.

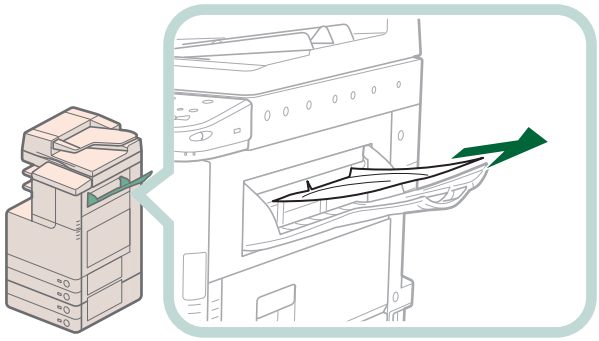

3 Follow the instructions on the touch panel display.

NOTE

The screen indicating the location of the paper jam repeatedly appears on the touch panel display until the paper jam is entirely cleared.

Inside the Fixing Unit

If a message indicating there is a paper jam inside the fixing unit appears, follow the procedure described below to remove the jammed paper.

CAUTION

The fixing unit and its surroundings inside the printer are hot during use. Make sure the fixing unit is completely cool before removing the jammed paper. Touching the fixing unit when it is still hot may result in burns.

1 Grip the handle, and open the lower right cover of the main unit.

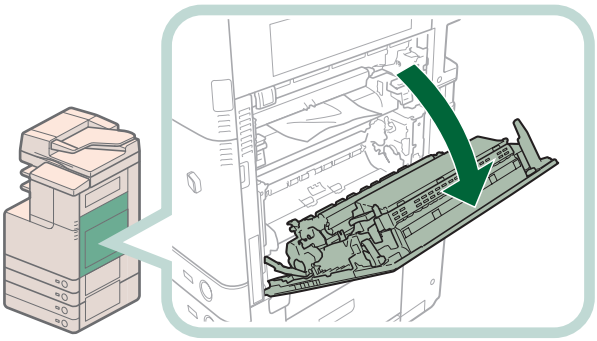

2 Remove the fixing unit.

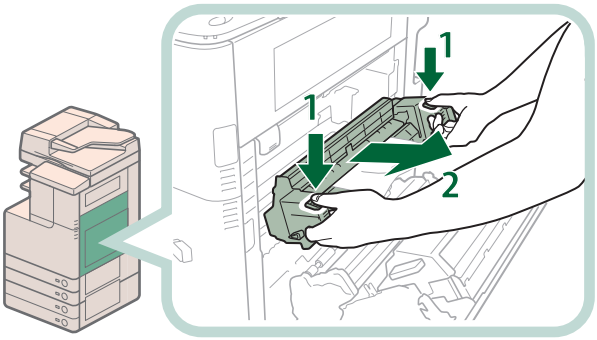

1. Hold the fixing unit by the parts indicated by the arrows.
2. Slowly remove the fixing unit.

CAUTION

The fixing unit and its surroundings inside the printer are hot during use. Make sure the fixing unit is completely cool before removing the jammed paper. Touching the fixing unit when it is still hot may result in burns.

3 Remove the jammed paper.

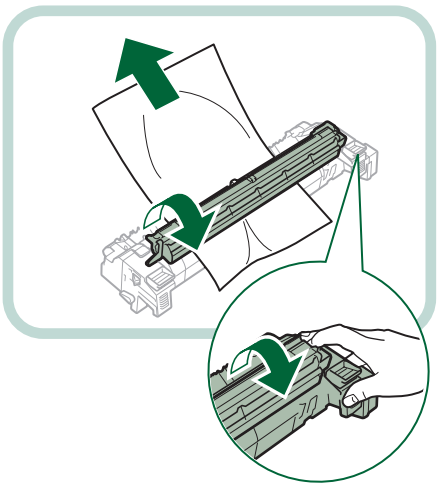

1. Place the fixing unit on a flat surface.
2. Open the fixing unit cover and remove the jammed paper.

4 Install the fixing unit.

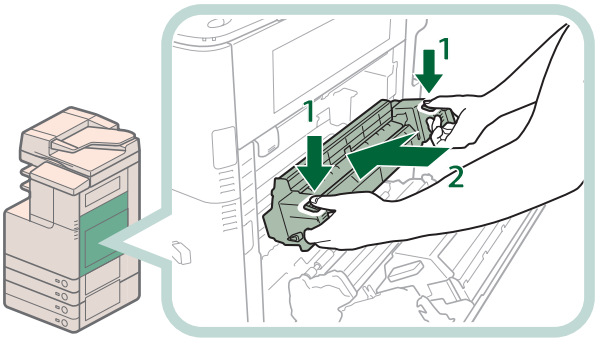

1. Hold the fixing unit by the parts indicated by the arrows.
2. Gently slide the fixing unit back into place.

NOTE

Gently push the fixing unit back into the machine until it clicks into place.

5 Close the lower right cover of the main unit.

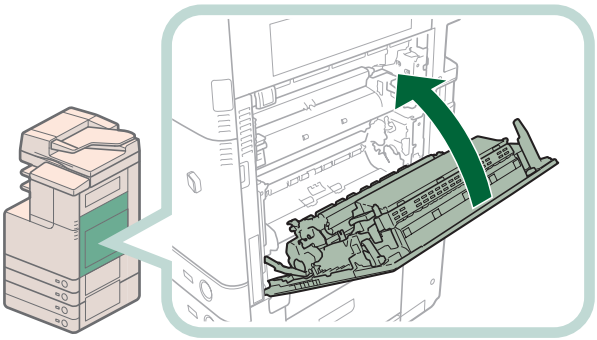

CAUTION

When closing the covers, be careful not to get your fingers caught, as this may result in personal injury.

NOTE

- Gently close the lower right cover until it clicks into place in the closed position.
- The screen indicating the location of the paper jam repeatedly appears on the touch panel display until the paper jam is entirely cleared.

Reducing the Frequency of Paper Jams

If paper jams occur frequently, even though there is no apparent problem with the machine, the following reasons may be the cause. Follow the instructions described below to reduce the frequency of paper jams.

There are torn pieces of paper left inside the machine.

Pulling jammed paper out of the machine by force may leave parts of the paper torn inside, leading to frequent paper jams. If jammed paper tears while it is being removed, be sure to remove any remaining pieces from inside the machine.

The paper is incorrectly loaded in the paper drawer.

Make sure that the paper size plate of a paper drawer matches the size of the paper loaded in the paper drawer.

Clearing Staple Jams

If a staple jam occurs, follow the procedure described below to remove the jammed staples.

IMPORTANT

Make sure to close all covers and paper drawers of the machine before clearing any staple jams.

Inner Finisher-C1

The Check the location of the staple jam, and follow the procedure described below, and the procedure that appears on the touch panel display, to remove any jammed staples.

NOTE

The Inner Finisher-C1 is an optional product.

1 Remove any jammed paper protruding from the output tray.

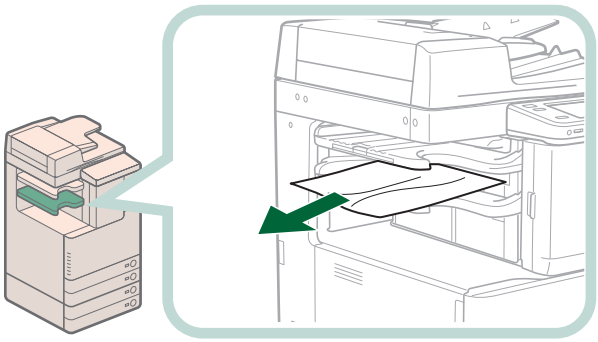

NOTE

If a paper jam occurs when you are printing in the Staple mode, do not remove the output sheets that are waiting to be stapled. Printing and stapling resume after you clear the paper jam.

2 Pull out the staple case.

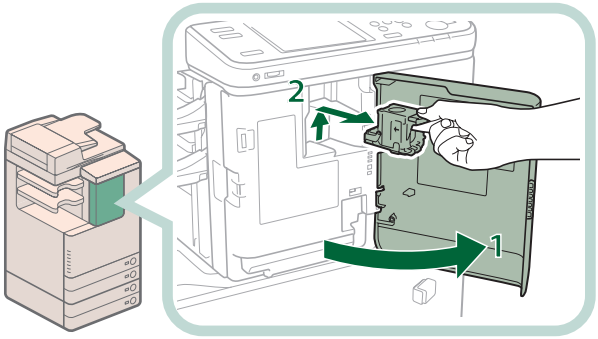

1. **Open the front cover of the finisher.**
2. **Pull out the staple case, holding it by the green tab.**

3 Remove jammed staples from the staple case.

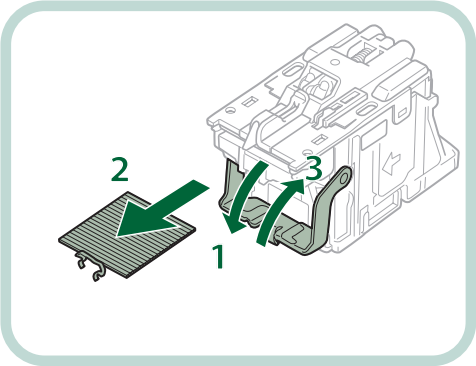

1. Push down the tab on the staple case.
2. Remove all of the staples that slide from the staple case.
3. Return the tab on the staple case to its original position.

4 Insert the staple case into the finisher.

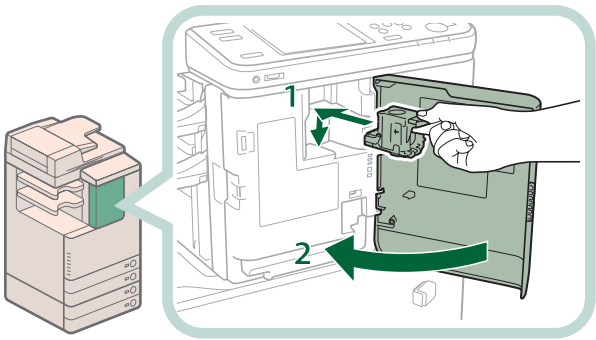

1. Gently push the staple case back into the finisher, and push down firmly until it is securely in place.
2. Close the front cover of the finisher.

CAUTION

When closing the covers, be careful not to get your fingers caught, as this may result in personal injury.

NOTE

After the cover is closed, the stapler unit may automatically perform a "dry" stapling operation to reposition the staples.

If Memory Becomes Full during Scanning

The number of pages that can be stored in the machine's memory is as follows: The memory available for image data differs, depending on the model of your machine.

		imageRUNNER ADVANCE C2030H/C2030/C2020H/C2020*1/C2025H		imageRUNNER ADVANCE C2020*1*2	
		Memory for Each Function	Shared Memory	Memory for Each Function	Shared Memory
Function	Copy	Approx. 100 pages		Approx. 200 pages	
	Printing from Computer	Approx. 100 pages*3		Approx. 1,000 pages	
	Fax (Receive)	Approx. 6,000 pages		Approx. 5,000 pages	
	Scan and Send				
	Fax/I-Fax Inbox				

*1 If you are using the imageRUNNER ADVANCE C2020, the memory available for image data differs, depending on the region.
*2 If you are using the imageRUNNER ADVANCE C2020, depending on the region, you can expand the memory capacity of your machine using the 2.5inch/80GB HDD to give it memory equivalent to the imageRUNNER ADVANCE C2030/C2030H/C2025H/C2020H.
*3 Excludes Secured Print jobs

For example, if you are using the imageRUNNER ADVANCE C2030H, the Copy function can store up to 6,100 pages of scanned images. 100 + 6,000 = 6,100 pages (approximate figures)

However, the number of pages that the machine's memory can store may differ, depending on the amount of memory required for files stored in the Fax/I-Fax Inbox, and jobs that are in the print queue.
If memory becomes full during the scanning of originals, the following message will appear on the touch panel display:

NOTE

- When using the Fax/Scan and Store functions, you can send up to 999 pages at one time.
- If you are using the imageRUNNER ADVANCE C2020, depending on the region, you may not be able to send 999 pages at one time, even if you reduce the data for each page. In this case, divide the document into two or more parts, and then try sending the document again.
- Delete any unnecessary files in the Fax/I-Fax Inbox to free up memory.

For the Copy Functions

1 Follow the directions below based on the message that appears on the touch panel display.

● If the message <Scanning will be stopped because the memory is full. Do you want to print the scanned pages?> appears:

Select [Yes] or [No].

[Yes]: The pages scanned into memory are printed. When printing is complete, scan the remaining originals.
[No]: The pages scanned into memory are not printed.

● If the message <Scanning will be stopped because the memory is full.> appears:

Select [OK].

[OK]: Returns to the Basic Features screen of the function you are using. Scan the job again when the current job is complete.

1 Follow the directions below based on the message that appears on the touch panel display.

- **If the message <Scanning will be stopped because the memory is full. Do you want to send the scanned pages?> appears:**

Select [Yes] or [No].

[Yes]: The pages scanned into memory are sent. When sending is complete, scan the remaining originals.
[No]: The pages scanned into memory are not sent.

Service Call Message

If a malfunction occurs and the machine cannot operate normally, a screen prompting you to contact your local authorized Canon dealer is displayed.

NOTE

- Even when the machine cannot operate normally, some functions may still be available.
- When the message <Check the printer. Call service representative.> is displayed to indicate that the Print function is unavailable, functions that do not use the Print function (such as [Scan and Send]) can be used. (However, faxes cannot be sent from computers.)
- When the message <Check the scanner. Call service representative.> is displayed to indicate that the Scan function is unavailable functions that do not use the Scan function (such as [Access Stored Files]) can be used.

Contacting Your Local Authorized Canon Dealer

If a screen prompting you to contact your local authorized Canon dealer is displayed, follow the procedure described below.

1 Turn OFF the main power of the main unit.

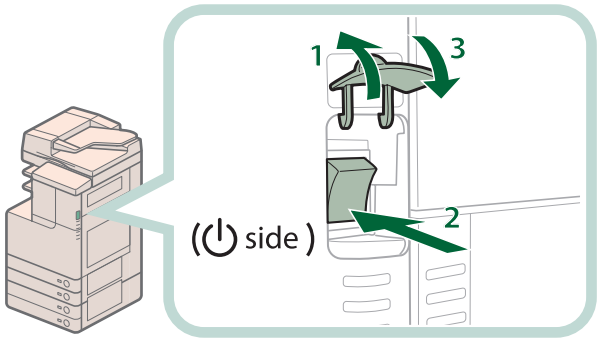

1. Open the main power switch cover.
2. Press the main power switch to the "⏻" side.
3. Close the main power switch cover.

IMPORTANT

If you turn OFF the main power switch when there is a job waiting to print, that job is erased.

2 Wait at least 10 seconds after the Main Power Indicator is turned off, and then turn the main power switch back to ON.

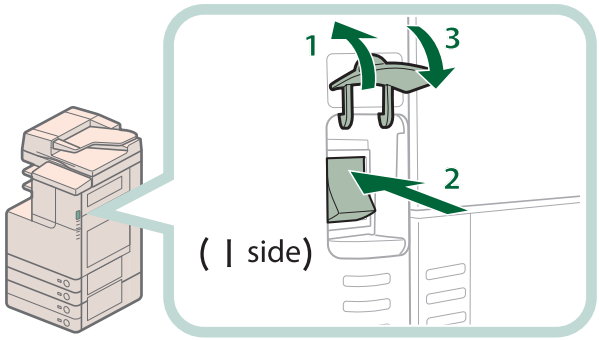

1. Open the main power switch cover.
2. Press the main power switch to the "I" side.
3. Close the main power switch cover.

3 If the machine still does not operate normally, follow the procedure below, and then contact your local authorized Canon dealer.

1. **Turn the main power switch OFF.**
2. **Remove the power plug from the power outlet.**

WARNING

Do not connect or disconnect the power cord with wet hands, as this may result in electrical shock.

CAUTION

Always grasp the power plug when disconnecting the power cord. Pulling on the power cord may expose or snap the core wire, or otherwise damage the power cord. If the power cord is damaged, this could cause current to leak, resulting in a fire or electrical shock.

NOTE

When you contact your local authorized Canon dealer, have the following information available:
- Product name
- Details of the malfunction
- The error code displayed on the touch panel display

Setting the Limited Functions Mode from the Service Call Message Screen

If the Service Call Message screen appears indicating a malfunction of a Finisher mode, you can clear it by turning the Limited Functions Mode 'On' to temporarily limit the use of the finishing modes. When [Limited Functions Mode] is displayed, follow the procedures below.

IMPORTANT

If you turn OFF the main power switch when there is a job waiting to print, that job is erased.

NOTE

If you set Limited Functions Mode to 'On' from the Service Call Message screen, Limited Functions Mode in [Management Settings] (Settings/Registration) is also set to 'On'. (See e-Manual > Security.)

1 Press [Limited Fnctns Mode] → [Yes].

A message prompting you to turn the main power switch back ON appears.

2 Turn OFF the main power of the main unit.

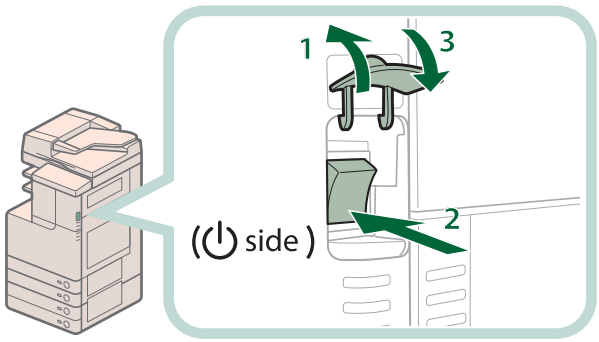

1. Open the main power switch cover.
2. Press the main power switch to the "⏻" side.
3. Close the main power switch cover.

3 Wait at least 10 seconds after the Main Power Indicator is turned off, and then turn the main power switch back to ON.

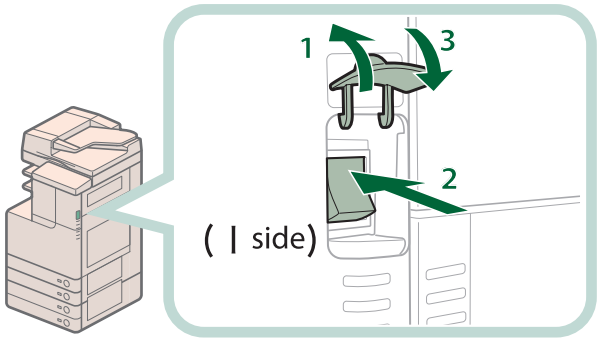

1. Open the main power switch cover.
2. Press the main power switch to the "I" side.
3. Close the main power switch cover.

The machine starts up in the Limited Functions mode.

Functions Available When the Printer/Scanner Cannot Be Used Due to an Error

Some functions may still be available even when one of the following error messages that indicate the Print and Scan functions cannot be used is displayed on the bottom of the screen.
When the Print function is restricted: <Check the printer. Call service representative.>
When the Scan function is restricted: <Check the scanner. Call service representative.>
You can use the following functions even when the Print and Scan functions are restricted.

Main Menu Screen

✓: Available -: Unavailable

Available Function	When the Print function is restricted	When the Scan function is restricted
Copying	-	-
Fax	✓	-
Scan and Send	✓	-
Scan and Store	✓	-
Access Stored Files	-	✓*1
Fax/I-Fax Inbox	-	✓
Secured Print	-	✓
Scanner	✓	-
Web Access	✓	✓
Settings/Reg. Shortcut	-	-
Tutorial	✓	✓
iW Function Flow	-	-
Other MEAP Applications*2	✓	✓

Control Panel

✓: Available -: Unavailable

Available Function	When the Print function is restricted	When the Scan function is restricted
Quick Menu*3	✓	✓
Status Monitor/Cancel	✓*4	✓
Settings/Registration	-	-

Operation from a Computer

✓: Available -: Unavailable

Available Function	When the Print function is restricted	When the Scan function is restricted
Remote UI	✓	✓
MEAP Application*2	✓	✓

*1 [Add Files (Scan and Store)] on the Edit File screen is not available.
*2 Available by installing each MEAP application. May not be available depending on the restricted functions.
*3 The registered button may not be available depending on the restricted functions.
*4 [Print List] on the Job Log screen and [Register] on the Consumable screen are not available.

IMPORTANT

- A print job is automatically canceled when the Print function is restricted. A scan job is automatically canceled when the Scan function is restricted.
- The machine may not enter the Sleep mode completely when the function is restricted due to an error.

NOTE

If the target function is restricted due to an error, the function is not available when you use the shortcut key on the top of the Main Menu screen or when you use the Quick Menu.

Printer/Fax Driver Troubleshooting

See the "Troubleshooting" in the driver help to resolve problems when using the printer driver or fax driver for Windows. In this section, screens for the printer driver are used.

NOTE

Printing methods may differ depending on the applications you are using. For details, see the instruction manuals provided with the application software.

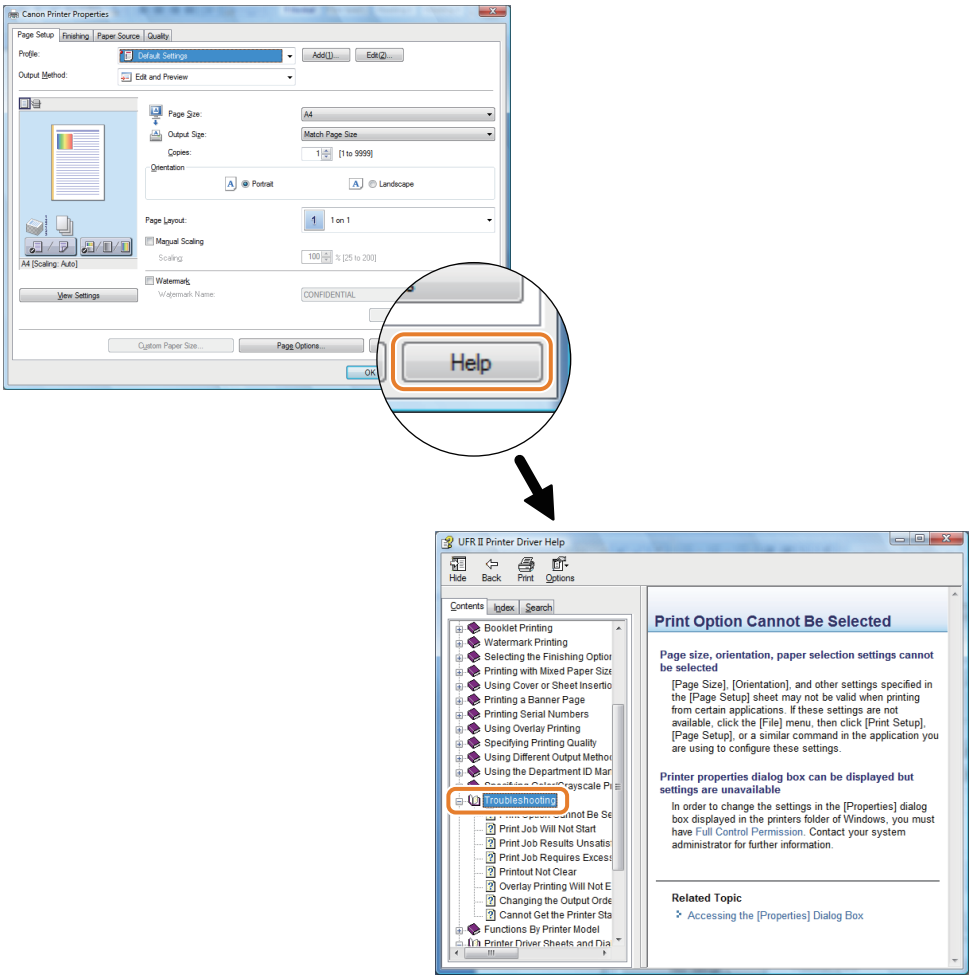

Frequently Asked Questions

This section includes frequently asked questions and answers regarding the machine. Use this section if you have trouble using the machine.

	Question	Applicable Page
Q1	I want to make a rush copy, but I cannot because of the long copy job.	p. 115
Q2	Can I scan an original on the machine and save it to a computer?	p. 116
Q3	Can I make copies or send a facsimile of different size originals at the same time?	p. 117
Q4	I want to send the scanned originals via an e-mail. Which screen do I operate from?	p. 118
Q5	Can a mark be applied to the document that has been scanned?	p. 119
Q6	Do I need to enter the address of the recipient every time?	p. 120
Q7	Can you give me information on how to send to the SMB server and specify its settings?	p. 121
Q8	Can I move the Address Book registered on another Canon machine onto this machine?	p. 123
Q9	I want to check the IP address for this machine to run the Remote UI, but I do not know how to check it.	p. 123
Q10	Can I forward the data received via fax/I-fax?	p. 124
Q11	When sending a fax, can the machine be set so that the sender's fax number and name be displayed?	p. 125
Q12	Can I send a fax to multiple destinations?	p. 126
Q13	Can I change the language displayed on the touch panel display?	p. 127
Q14	Can I change the screen or the order that the functions are displayed on the touch panel display when the power is turned ON?	p. 128
Q15	How do I change the default settings for the Copy from the Color mode to the Black mode?	p. 129
Q16	How do I change the default settings (scan settings and file format) of the Scan and Send Basic Features screen?	p. 130
Q17	Is there a way to prevent a transmission error when sending a facsimile to a new destination?	p. 131
Q18	Can I change the print settings in the printer driver?	p. 132
Q19	When copying, the Scan screen for the next document is displayed. Is there a way to not display this screen?	p. 134
Q20	Can I restrict the number of color copies/prints?	p. 135
Q21	The content of the reverse side appears on the copies.	p. 136
Q22	The quality of the image sent by fax is not good.	p. 137
Q23	The printed paper appears dirty. Also, the color appears to be different from the original.	p. 138
Q24	The printed paper is warped.	p. 138
Q25	The edges are not printed when I perform enlargement/reduction.	p. 139
Q26	Can I print on the reverse side of the preprinted paper?	p. 139
Q27	Can I output paper to a different tray according to the function?	p. 140
Q28	Can I print on envelopes?	p. 140
Q29	What are the types of paper that I can use?	p. 141
Q30	What is the model number of the staple cartridge for the finisher or the stamp cartridge for the feeder?	p. 141

	Question	Applicable Page
Q31	A paper jam has occurred. How do I solve this problem?	p. 142
Q32	Numbers such as #009 and #850 are displayed on the touch panel display. What does this mean?	p. 143
Q33	I cannot print from the computer. Did the machine malfunction?	p. 143
Q34	It seems as though turning OFF the machine is different from the previous iR. I am afraid that this may be a wrong operation.	p. 144
Q35	The touch panel display is completely black.	p. 145
Q36	I have just sent an important document via facsimile. Can I check to make sure that it was sent correctly?	p. 146
Q37	I had printed from the computer, but I did not find the output. I am afraid that someone may have taken it by mistake.	p. 147
Q38	What is MEAP?	p. 147

Q1 I want to make a rush copy, but I cannot because of the long copy job.

A

You can temporarily stop the current copy job and give priority to a rush copy by using the Interrupt mode.

- To set:
  1. Press [Copy] → [Interrupt].
  2. Set the copy modes, as required.

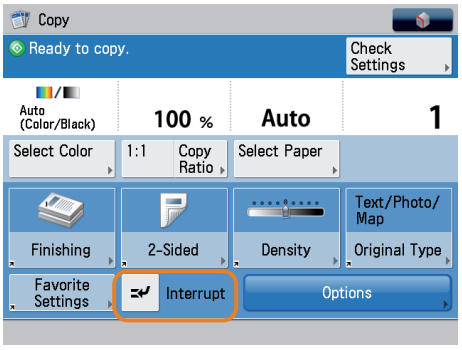

You can scan the original even if the machine has just been started or is printing (Reserved Copying). For more information, see e-Manual > Copy.

Q2 Can I scan an original on the machine and save it to a computer?

A It is possible if you are using Windows. Install the Network ScanGear Driver in your computer, and then switch the network scan function to online.

To Install the Driver:

Install using the UFR II User Software CD-ROM that comes with the machine.

To Switch the Network Scan Function to Online:

Press [Scanner] → [Online].

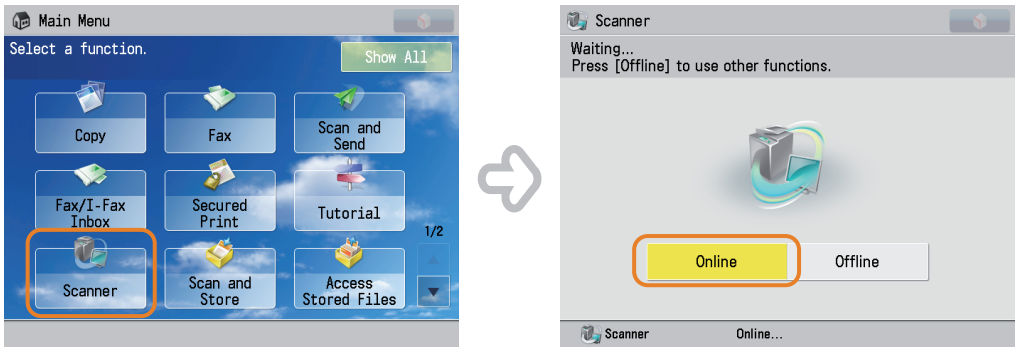

For instructions on installing the Network ScanGear Driver, see the Network ScanGear User's Guide on the UFR II User Software CD-ROM.

Q3 Can I make copies or send a facsimile of different size originals at the same time?

A You can make copies or send a facsimile of different size originals at the same time by using the Different Size Originals mode.

* The Different Size Originals mode enables you to copy or scan different size originals with the same widths (A3 and A4, or B4 and B5, etc.) or different widths (A3 and B4, or A4 and B5, etc.), together as one group by setting them in the feeder.

To set:

1. Press [Copy] or [Fax] → [Options] → [Different Size Originals].
2. Select the type of different size originals → press [OK].

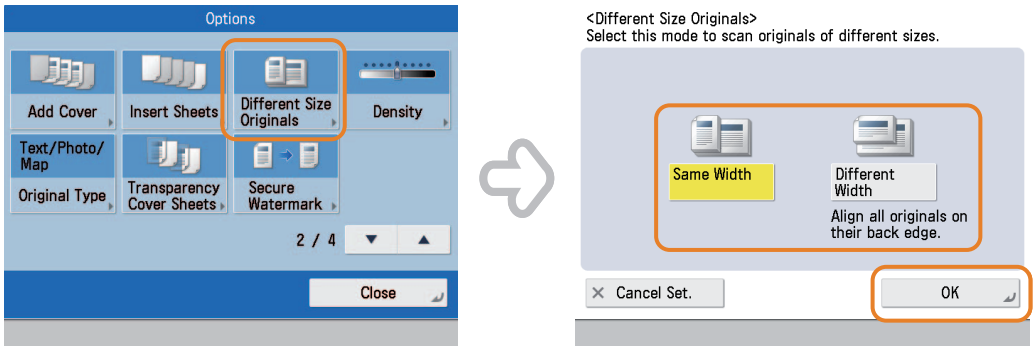

For more information, see e-Manual > Copy, or Sending/Receiving a Fax.

Q4 I want to send the scanned originals via an e-mail. Which screen do I operate from?

A You can send an e-mail from [Scan and Send] on the Main Menu screen.

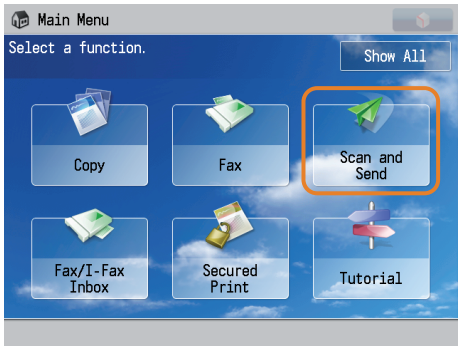

- To set:
  1. Press [Scan and Send] → [New Destination] → [E-Mail].
  2. Enter the e-mail address → press [OK].

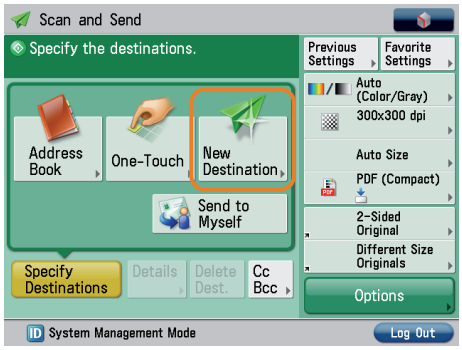

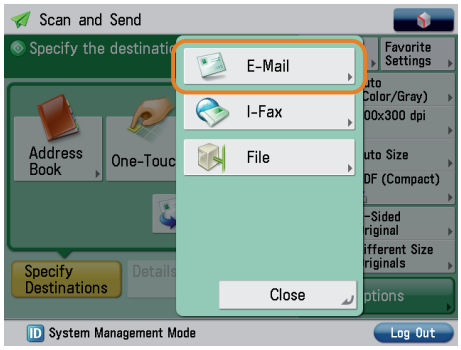

If frequently used e-mail addresses are stored in the Address Book, you can specify the destination quickly. For more information, see p. 120 in this manual.
For more information on placing an original on the platen glass or feeder for sending, see p. 29 in this manual.

Q5 Can a mark be applied to the document that has been scanned?

A

The machine can print a stamp on the scanned document by using the Stamp mode.

* The Stamp mode can only be used with the Fax or Scan and Send function.

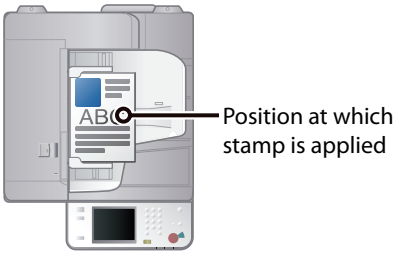

Vertical Placement

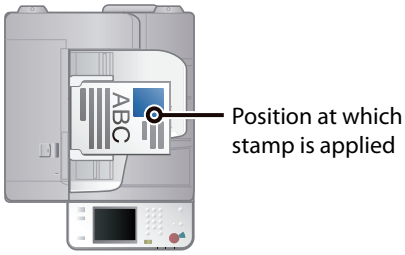

Horizontal Placement

To set:

1. Press [Scan and Send] or [Fax] → [Options].
2. Press [Finished Stamp] → [Close].

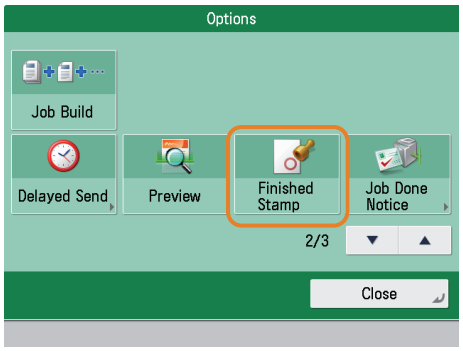

After the original is sent, you can also send a job done notice to the specified e-mail address (Job Done Notice). For more information, see p. 146 in this manual.

Q6 Do I need to enter the address of the recipient every time?

A You can register destinations in the Address Book. Registering destinations, such as fax numbers, in the Address Book saves you the effort of entering the destination each time.

Storing from the Remote UI:

1. Click [Address Book] → select the address book to register.
2. Press [Register New Destionation] → select type of destination → enter necessary items.
3. Press [OK].

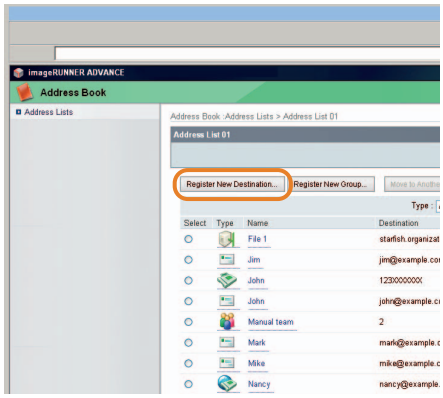

Storing from the Touch Panel Display:

1. Press [Scan and Send] or [Fax] → [Address Book] → [Other Ops.].
2. Press [Register/Edit] → [Register New Dest.] → enter information. following the instructions on the touch panel display.
3. Press [OK].

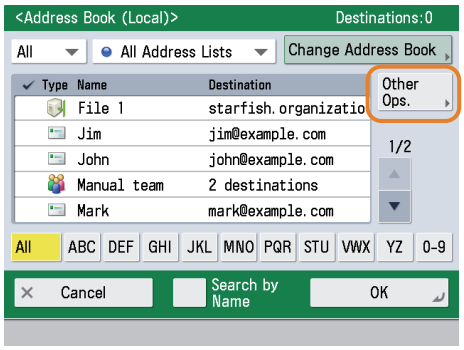

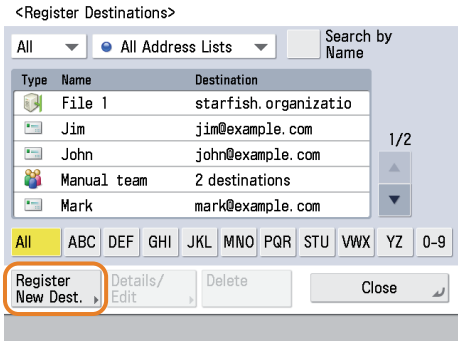

You can also store frequently used destination as a one-touch button on the Scan and Send Basic Features screen or the Fax Basic Features screen. When scanning or sending a fax, you can specify the destination using a one-touch button. For more information, see e-Manual > Scan and Send, or Sending/Receiving a Fax.

Q7 Can you give me information on how to send to the SMB server and specify its settings?

A You can specify the settings using the following method.

Setting the Shared Folder on the Computer-Side:

- Using Windows 7

1. Right-click the new folder → click [Property] → [Sharing].
2. Click [Sharing] → select the users you want to authorize access.
3. Click [Add] → select [Read/Write] for <Permission Level> for the added users.
4. Click [Sharing] → [End].
5. Click [Advanced Sharing] → select [Share this folder] → click [Permission].
6. Select the users you want to authorize access → select [Allow] for [Full Control].
7. Click [OK] → [OK] → [Close].

- Using Windows Vista

1. Right-click the new folder → click [Property] → [Sharing].
2. Click [Share] → select the users you want to authorize access → click [Add].
3. Select [Co-owner] for <Permission Level> for the added users → click [Share] → [End].
4. Click [Advanced Sharing] → select [Share this folder] → click [Permission].
5. Add the users you want to authorize access → select [Allow] for [Full Control].
6. Click [OK] → [OK] → [Close].

- Using Windows XP

1. Right-click the new folder → click [Sharing and Security] → select [Share this folder].
2. Click [Permissions] → select Everyone → click [Delete].
3. Click [Add] → add the users you want to authorize access → select [Allow] for [Full Control].
4. Click [OK] → [OK] → [Close].

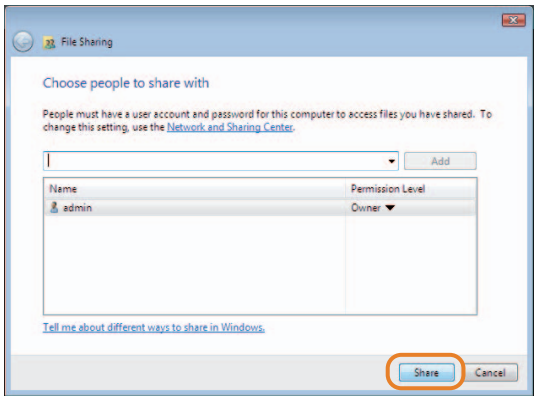

- Using Windows 2000

1. Right-click the new folder → click [Sharing] → select [Share this folder].
2. Click [Permissions] → select Everyone → click [Delete].
3. Click [Add] → add the users you want to authorize access → select [Allow] for [Full Control].
4. Click [OK] → [OK].

* The item names may differ, depending on the type of operating system you are using. For more information, check the manual documentation for the personal computer operating system you are using.

Specifying the File Server on the Touch Panel Display:

- Specifying the File Server by Host Search:

1. Press [Scan and Send] → [New Destination] → [File].
2. Press the protocol drop-down list → [Windows (SMB)] → [Search Host].
3. Enter the IP address of the computer to use as the file server in [Host Name] → press [Start Searching].
4. Specify the file server → press [OK].

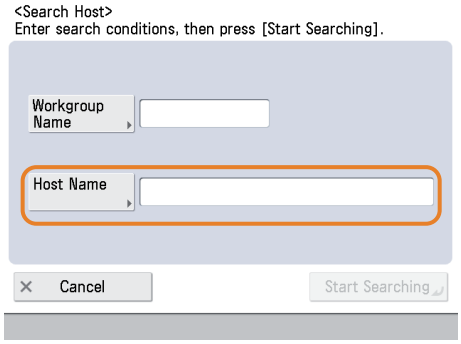

- Specifying the File Server by Browsing:

1. Press [Scan and Send] → [New Destination] → [File].
2. Press the protocol drop-down list → [Windows (SMB)] → [Browse].
3. Specify the file server → [OK].

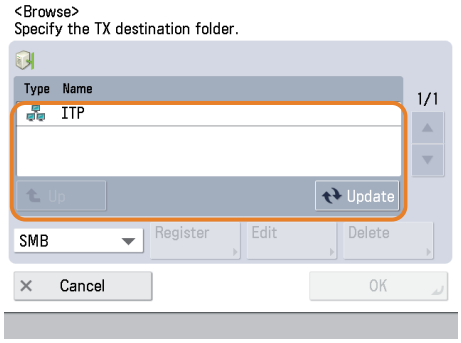

You can use the following procedure to check the IP address of your computer.

* The procedures may differ, depending on the type of operating system you are using.

1. On the [Start] menu, click [Run] → enter 'cmd'.
2. Click [OK] → enter 'ipconfig' → press [ENTER] on the keyboard.

Q8 Can I move the Address Book registered on another Canon machine onto this machine?

A You can use the import and export mode of the Remote UI to move the Address Book.

Exporting the Address Book from Another Canon Machine:

1. Click [Settings/Registration] → [Data Management] in <Management Settings>.
2. Click [Import/Export] → [Address Book] → [Export].
3. Select the Address Book → click [Start Export].
4. Specify the storage location for the file.

* The key names may differ, depending on the type of the model you are using.

Importing the Address Book to the Machine:

1. Click [Settings/Registration] → [Data Management] in <Management Settings>.
2. Click [Import/Export] → [Import/Export Address Book] → [Import].
3. Select the file you want to import → click [Start Import].

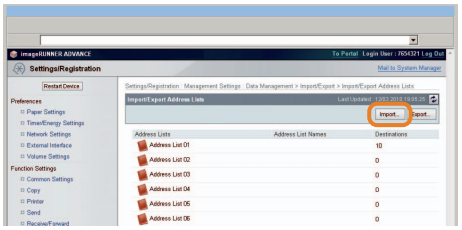

- To perform this procedure, you must log in as an administrator. For more information, see e-Manual > Security.
- You can also import and export forwarding settings. For more information, see e-Manual > Remote UI.

Q9 I want to check the IP address for this machine to run the Remote UI, but I do not know how to check it.

A You can check the IP address from the touch panel display of this machine.

Checking the IP Address of This Machine:

- IPv4 Address

1. Press (Settings/Registration).
2. Press [Preferences] → [Network] → [TCP/IP Settings].
3. Press [IPv4 Settings] → [Use IPv4] → [On].
4. Press [IP Address Settings].

- IPv6 Address

1. Press (Settings/Registration).
2. Press [Preferences] → [Network] → [TCP/IP Settings].
3. Press [IPv6 Settings] → [Use IPv6] → [On].
4. Press [Manual Address Settings].

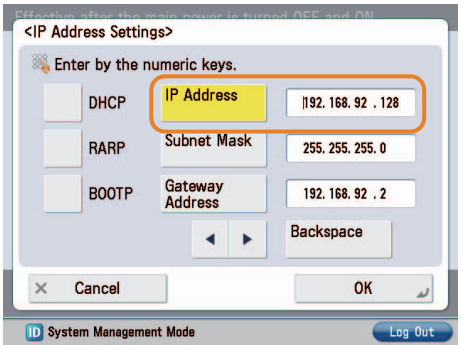

Starting the Remote UI:

Run the Web browser for the computer → enter 'http://<IP address of the machine>' into [Address].

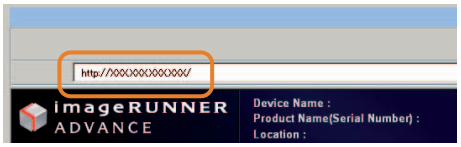

- To perform this procedure, you must log in as an administrator. For more information, see e-Manual > Security.
- If you cannot start the Remote UI, specify the following settings.
  1. Press (Settings/Registration).
  2. Press [Management Settings] → [License/Other] → [Remote UI].
  3. Press [On] → [OK].

Q10 Can I forward the data received via fax/I-fax?

A If you specify the forwarding settings, you can forward received documents that matches the previously set conditions to the Confidential Fax Inbox of this machine, other machines, or the file server.

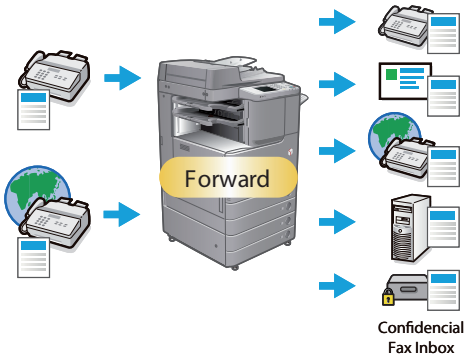

To set:

1. Press (Settings/Registration).
2. Press [Function Settings] → [Receive/Forward] → [Common Settings].
3. Press [Forwarding Settings] → [Register] → specify the forwarding conditions.
4. Press [OK].

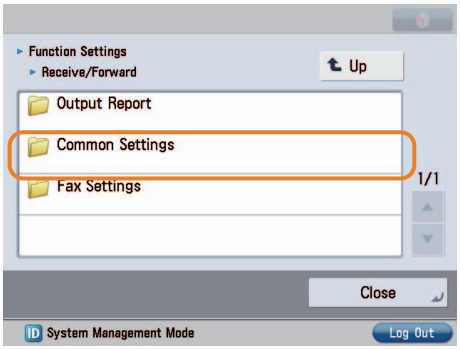

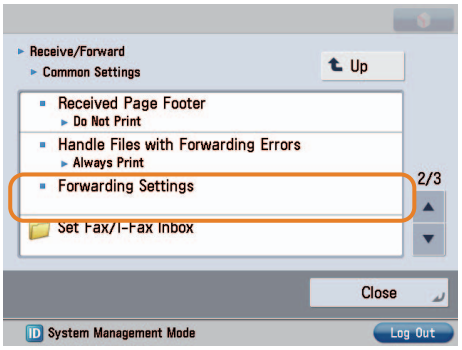

- To perform this procedure, you must log in as an administrator. For more information, see e-Manual > Security.
- If frequently used e-mail addresses are stored in the Address Book, you can specify the address quickly. For more information, see p. 120 in this manual.

Q11 When sending a fax, can the machine be set so that the sender's fax number and name be displayed?

A

After registering the sender's name, you can specify to print the TX Terminal ID when sending a fax.

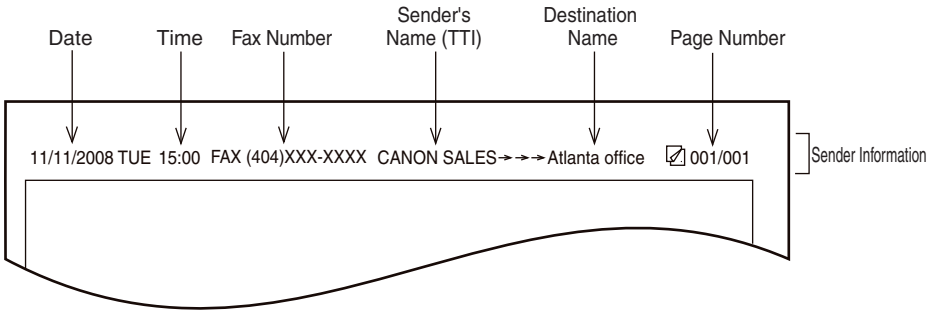

Registering the Sender's Name:

1. Press (Settings/Registration).
2. Press [Function Settings] → [Send] → [Fax Settings].
3. Press [Register Sender Name (TTI)] → [Register/Edit] → enter sender's name.
4. Press [OK].

Displaying/Printing the TX Terminal ID:

1. Press [Fax] → [Options] → [Sender Name (TTI)].
2. Select the sender's name → press [OK].

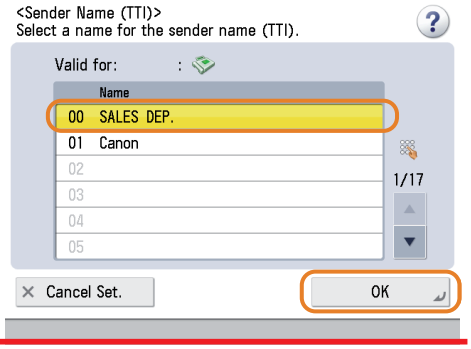

For more information, see e-Manual > Settings/Registration.

Q12 Can I send a fax to multiple destinations?

A By specifying the destinations as indicated below, you can send a fax to multiple destinations at the same time.

Manually Entering Multiple Destinations:

* You can enter up to 256 destinations.

1. Enter the fax number using ⓪ - ⑨ (numeric keys), ⊛, and # → press [OK].
2. Continue to enter the other destinations → press [OK].
3. Press ⊙(Start).

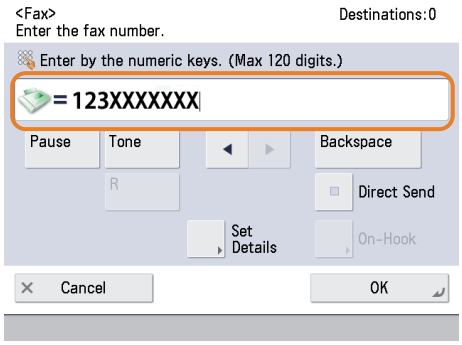

Registering a Group Destination from the Address Book:

* You can register up to 256 destinations.

1. Press [Address Book] → [Other Ops.] → [Register/Edit].
2. Press [Register New Dest.] → [Group].
3. Press [Name].
4. Enter the destination name → press [Next].
5. Press the drop-down list → select an address book between 1 and 10 → press [Next].
6. Press [Add from Address Book] → select the destinations to register → press [OK].
7. Press [OK] → [Close].
8. Select the newly registered Group destination → press [OK].
9. Press ⊙(Start).

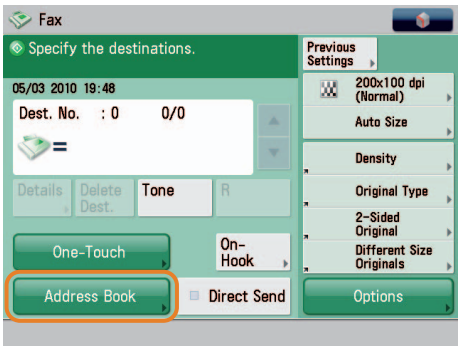

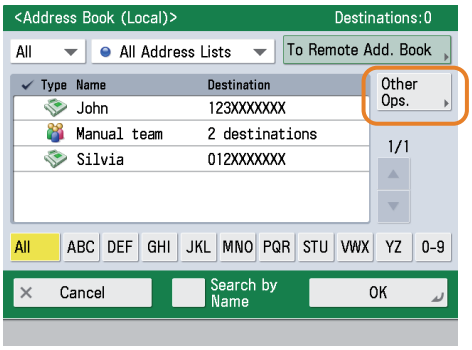

Registering Multiple Destinations in a One-Touch Button:

* You can register up to 200 destinations.

1. Press [One-Touch] → [Register].
2. Select the button to register → press [Register/Edit] → [Group].
3. Press [Name].
4. Enter the destination name → press [Next].
5. Press [One-Touch Name].
6. Enter the name to display on the one-touch button → press [Next].
7. Press [Add from One-Touch] → select the destinations to register in the group → press [OK].
8. Press [OK] → [Close].
9. Select the newly registered Group destination → press [OK].
10. Press ⊙(Start).

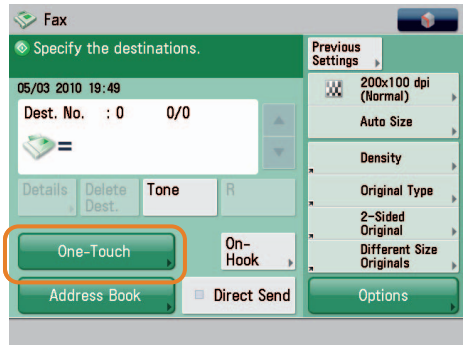

You cannot specify destinations registered in the address book and destinations registered in a one-touch button at the same time.

Q13 Can I change the language displayed on the touch panel display?

A

You can change the language displayed from [Language/Keyboard Switch] on the Settings/Registration screen.

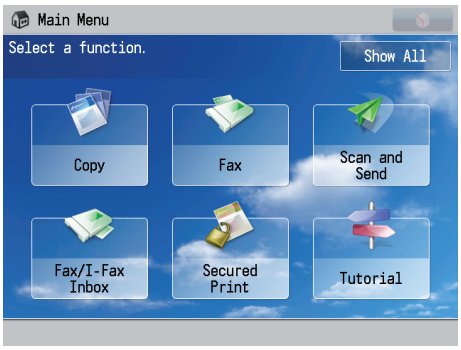

Displayed Language: English

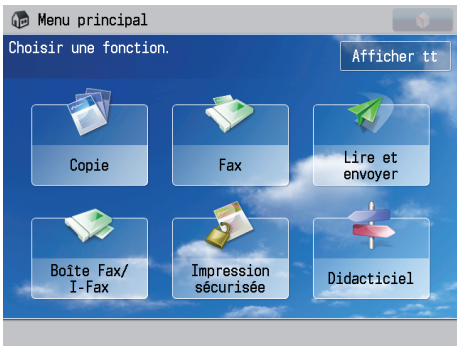

Displayed Language: Other

- To set:
  1. Press (Settings/Registration).
  2. Press [Preferences] → [Display Settings] → [Language/Keyboard Switch On/Off].
  3. Press [On] → [OK] → [Display Language/Keyboard Switch].
  4. Select the display language → press [OK].

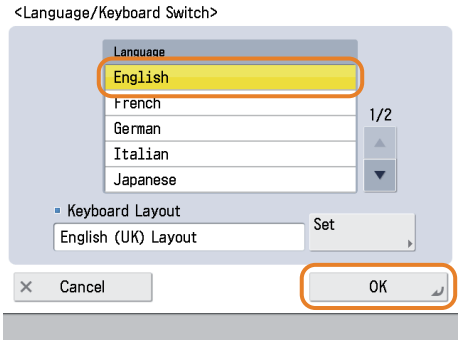

You can follow the procedure below to display a shortcut to the language switch on the Main Menu screen.

1. Press → [Other Main Menu Settings] → [On] for <Display [Language/Keyboard Switch]>.
2. Press [OK].

For more information, see e-Manual > Basic Operations.

Q14 Can I change the screen or the order that the functions are displayed on the touch panel display when the power is turned ON?

A You can change the default display that appears after the machine is turned ON from [Default Screen at Startup] on the Settings/Registration screen. You can also change the order that the functions are displayed or the layout from [Main Menu Button Display Settings] in .

Setting the Default Display That Appears after the Machine Is Turned ON:

1. Press (Settings/Registration).
2. Press [Preferences] → [Display Settings] → [Default Screen at Startup].
3. Select the settings → press [OK].

Changing the Displayed Function:

1. Press → [Main Menu Button Display Settings].
2. Select the layout or the order to display the function key → press [OK].

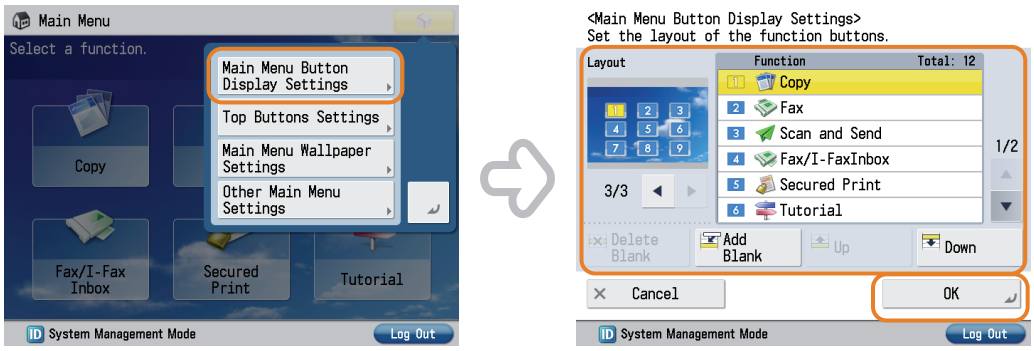

- To perform this procedure, you must log in as an administrator. For more information, see e-Manual > Security.
- You can also recall the settings that are previously stored as settings for frequently used functions from (Main Menu). For more information, see e-Manual > Quick Menu.

Q15 How do I change the default settings for the Copy from the Color mode to the Black mode?

A You can store the current settings as the default settings from [Change Default Settings] in on the Copy Basic Features screen. If the Black mode is set as the default settings, you can reduce the printing cost.

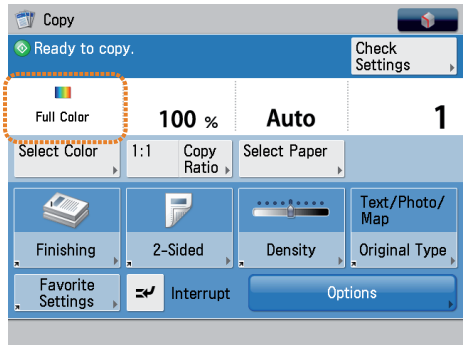

Color Selection: Full Color

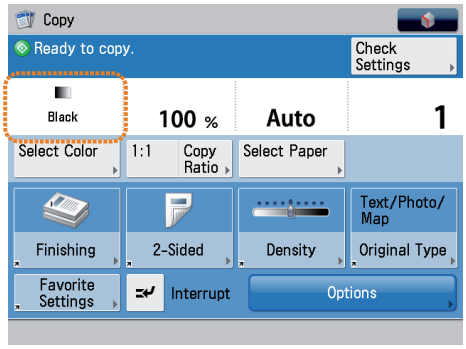

Color Selection: Black

To set:

- Changing the Color Mode to the Black Mode:
  Press [Copy] → [Select Color] → [Black].
- Registering the Set Color Mode as the Default Setting:

  1. Press → [Change Default Settings] → [Register].
  2. Press [Yes].

You can also save paper by using the N on 1 mode or Two-sided Copy mode. For more information, see e-Manual > Copy.

Q16 How do I change the default settings (scan settings and file format) of the Scan and Send Basic Features screen?

A You can store the current settings as the default settings from on the Scan and Send Basic Features screen.

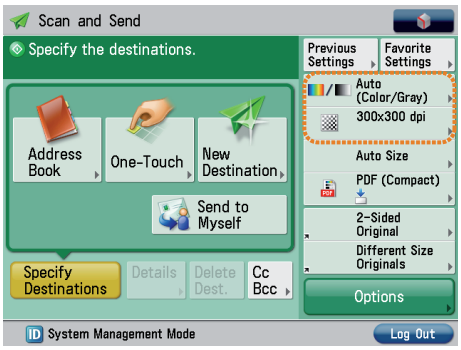

Before Change

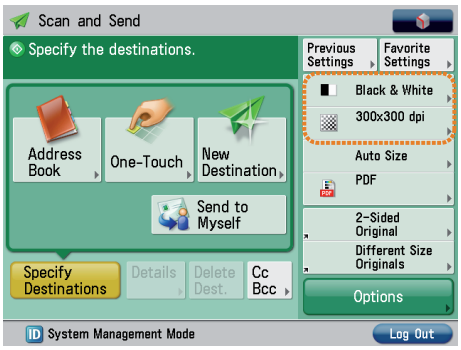

After Change

- To register the settings as the default settings:
  1. Press [Scan and Send] → specify the scan settings and the file format.
  2. Press → [Change Default Settings] → [Yes].

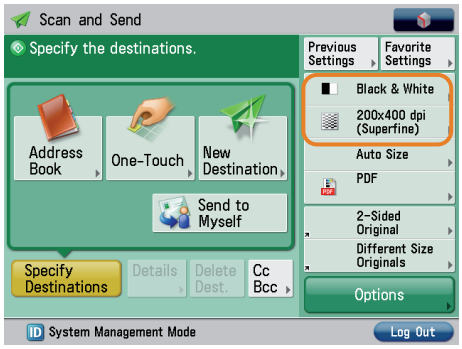

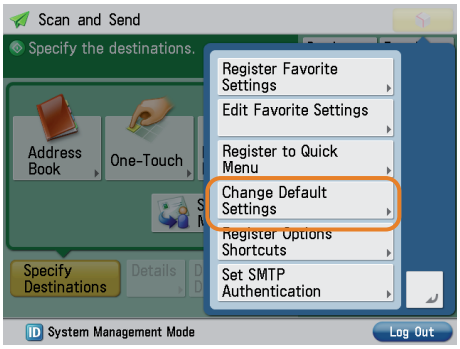

For more information on each file format, see e-Manual > Scan and Send.

Q17 Is there a way to prevent a transmission error when sending a facsimile to a new destination?

A

If [Confirm Entered Fax Number] in on the Settings/Registration screen is set, a screen to enter the number for confirmation is displayed. By entering the number again, you can reduce the risk of transmission error.

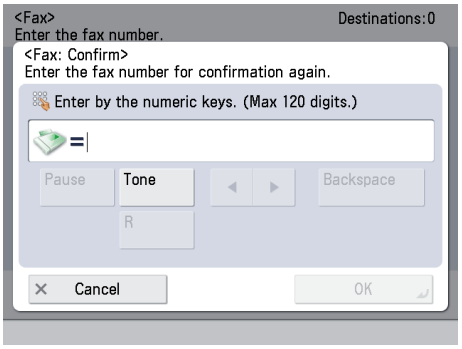

To set:

1. Press (Settings/Registration).
2. Press [Function Settings] → [Send] → [Fax Settings].
3. Press [Confirm Entered Fax Number] → [On] → [OK].

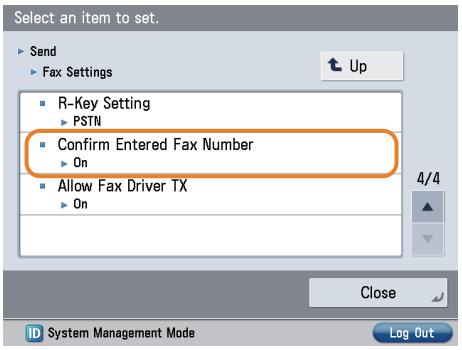

- To perform this procedure, you must log in as an administrator. For more information, see e-Manual > Security.
- You can also restrict sending to a destination that is not stored in the Address Book. For more information, see e-Manual > Security.

Q18 Can I change the print settings in the printer driver?

A You can change the print settings of the printer driver from the computer you are using.

Using Windows:

1. On the [Start] menu, click [Control Panel] → [Printer].
2. Right-click the printer icon → click [Printing Preferences] → specify the printer settings.
3. Click [OK].

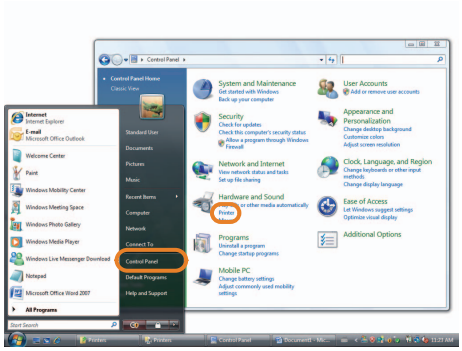

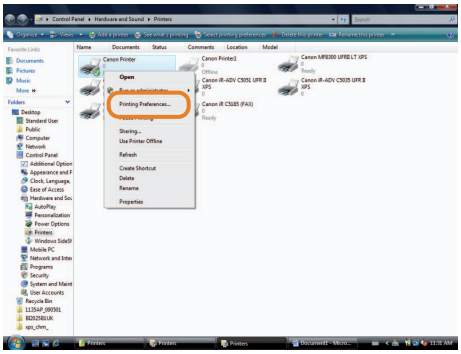

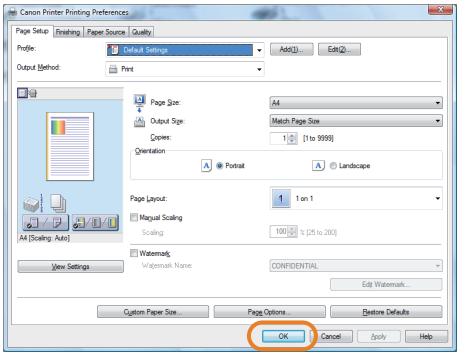

Using a Macintosh:

Page Settings:

1. Click [Page Setup] from the [File] menu in the application software.
2. Select each item as indicated below.
   Setting: [Page Attributes]
   Printer: The name of your printer
3. Click the <Settings> drop-down list → [Save as Default] → [OK].

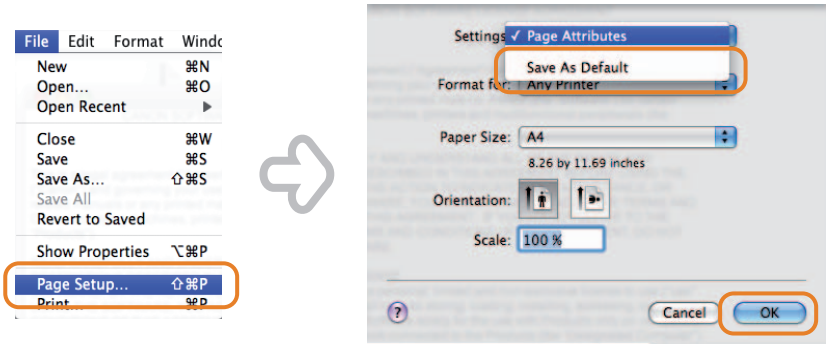

Print Settings:

1. Click [Print] from the [File] menu in the application software.
2. Click the <Printer> drop-down list → select the name of your printer.
3. Click the <Preset> drop-down list → [Save As].
4. Specify [Save Preset As] → click [OK].
5 Click the <Preset> drop-down list → select the saved preset name → click [Print].

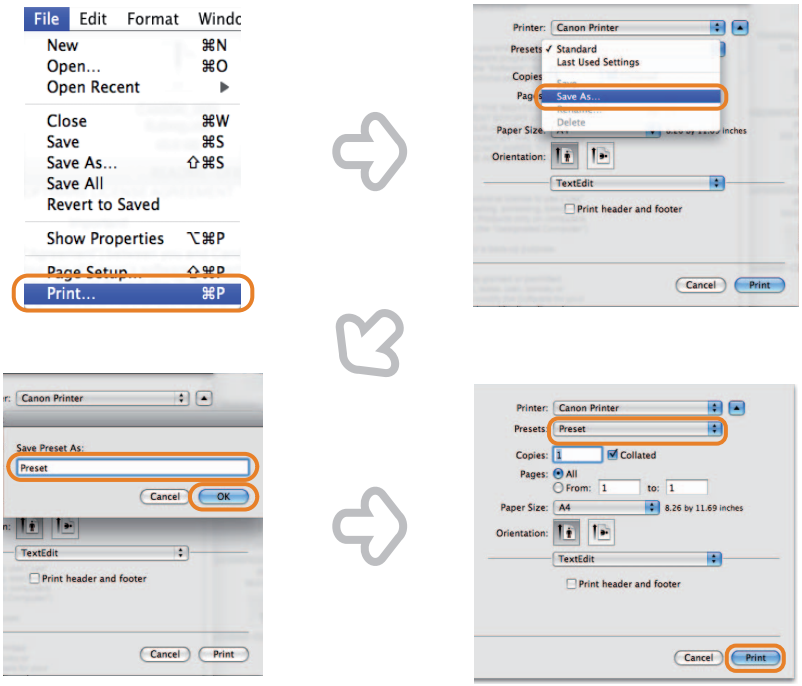

Q19 When copying, the Scan screen for the next document is displayed. Is there a way to not display this screen?

A If [Job Build] is set, the Scan screen for the next document is displayed. By canceling the Job Build setting, the screen is not displayed.

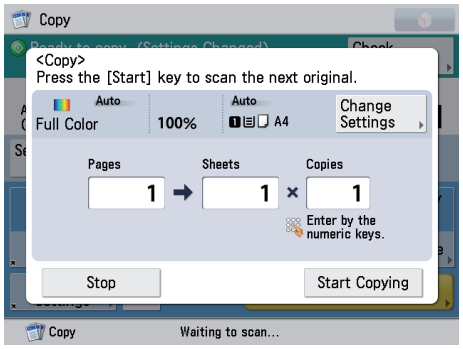

Scan Screen for Next Document

Canceling the Job Build Mode:

Press [Copy] → [Options] → [Job Build].

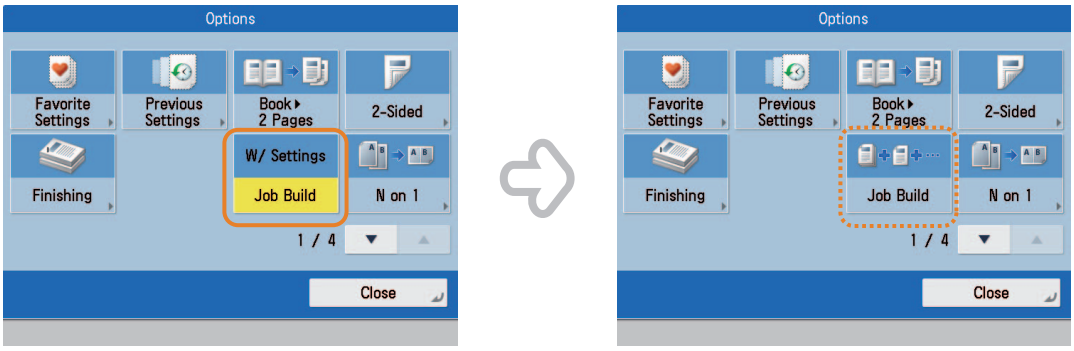

The Job Build mode is useful if you cannot load the originals all at once. This mode enables you to divide the originals into several parts, scan them, and then print them all together.

Q20 Can I restrict the number of color copies/prints?

A If Department ID Management is used, you can restrict the color output within groups.

Setting the Department ID Management and Registering the Password:

1. Press (Settings/Registration).
2. Press [Management Settings] → [User Management] → [Department ID Management].
3. Press [On] → [Register PIN] → [Reg.].
4. Enter the Department ID and password → press [OK].

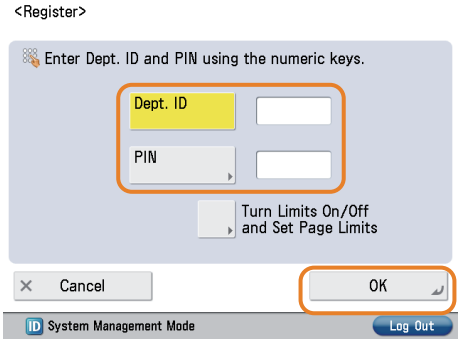

Setting the Page Limits:

1. Press (Settings/Registration).
2. Press [Management Settings] → [User Management] → [Department ID Management].
3. Press [On] → [Register PIN] → [Reg.].
4. Press [Turn Limits On/Off and Set Page Limits] → specify the page limit settings → press [OK].

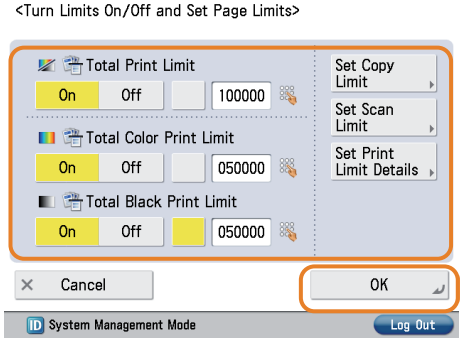

- To perform this procedure, you must log in as an administrator. For more information, see e-Manual > Security.
- You can also change the default settings for the Copy screen from Color to Black mode. For more information, see p. 129 in this manual.

Q21 The content of the reverse side appears on the copies.

A

You can erase the background color of the original and prevent the original image on the reverse side of thin originals from appearing on the copies by using [Background Density].

Original

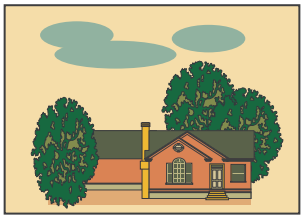

Copy

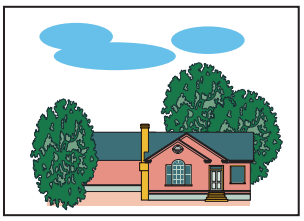

- To set:
  1. Press [Copy] → [Options] → [Density].
  2. Press [Adjust] → set [Auto] or [Adjust].
     [Auto]: If you press [Auto], the exposure of the original image is automatically adjusted.
     [Adjust]: If you press [Adjust], the exposure of the original image can be manually adjusted.

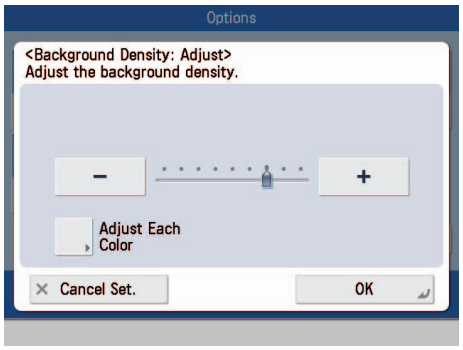

Background Density

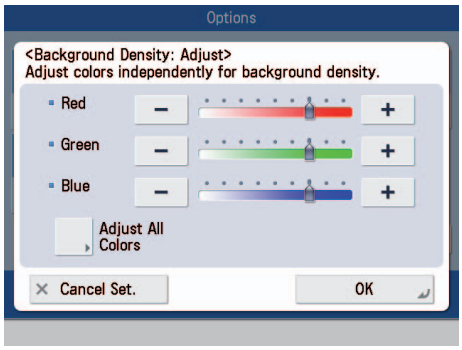

Adjust Each Color

For more information, see e-Manual > Copy.

Q22 The quality of the image sent by fax is not good.

A

Change the scan type or settings according to the type of original. Press [Preview] to check the document before sending.

- To set the Type of Originals and Exposure Settings:
  Press [Fax] → [Options] → specify the settings for [Original Type] or [Density].

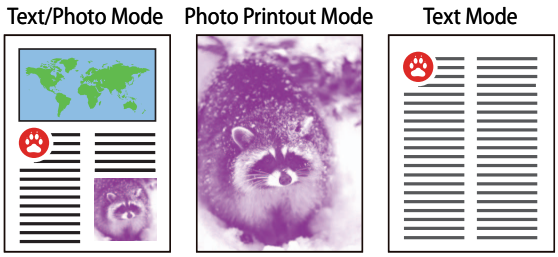

- To view the Preview Settings:
  1. Press [Fax] → specify the destination.
  2. Press [Options] → [Preview].
  3. Press (Start).

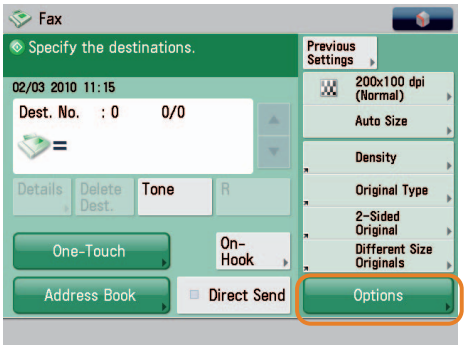

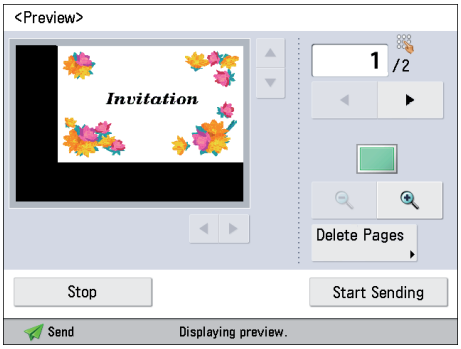

Preview

If [Register [Options] Shortcuts] from is selected, you can register the [Options] shortcut button on the Fax Basic Features screen.

Q23 The printed paper appears dirty. Also, the color appears to be different from the original.

A If streaks are printed on the paper or the image is not printed evenly, the feeder or inside of the machine may be dirty. Follow the procedure below to clean the machine. You can also automatically correct the gradation and color of the image from [Auto Adjust Gradation].

Automatic Feeder Cleaning:

1. Press (Settings/Registration).
2. Press [Adjustment/Maintenance] → [Maintenance] → [Clean Feeder].
3. Load approximately 10 sheets of blank paper in the feeder → press [Start].

Cleaning the Inside of the Machine:

1. Press (Settings/Registration).
2. Press [Adjustment/Maintenance] → [Maintenance] → [Clean Inside Main Unit].
3. Press [Start].

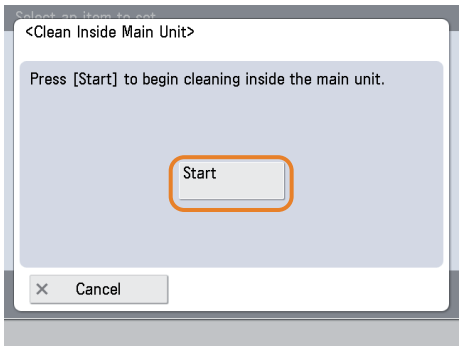

Automatic Gradation Adjustment:

1. Press (Settings/Registration).
2. Press [Adjustment/Maintenance] → [Adjust Image Quality] → [Auto Adjust Gradation].
3. Press [Quick Adjust] → [Start].

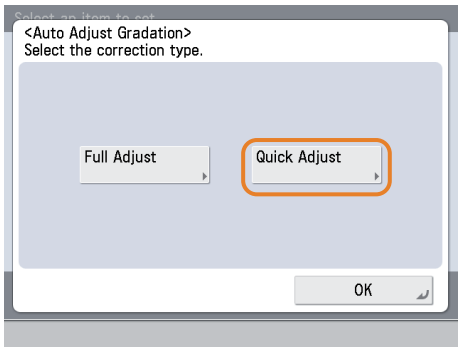

For Automatic Gradation Adjustment, you can also select full adjustment to adjust more precisely than the quick adjustment described above. For more information, see e-Manual > Settings/Registration.

Q24 The printed paper is warped.

A If you print an original with many images or an original with a high image density, the paper may become warped. To reduce the warping, try the following.

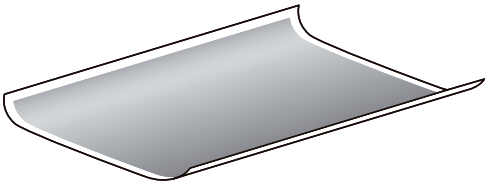

Use heavy paper:

If you are using thin paper, try changing to with a weight of approximately 80 g/m2.

Use paper with a low moisture content:

When you remove paper from its packaging, load it into the paper source immediately. When there is paper remaining in the packaging after you have loaded the paper, store it with the packaging closed properly to prevent the paper from absorbing moisture.

For information on loading paper, see p. 53 in this manual.

Q25 The edges are not copied when I perform enlargement/reduction.

A Check the orientation of the paper or set to automatically rotate the paper to ensure it is copied correctly. Perform the following operation.

- Check the Orientation of the Original:
  Check whether the orientation of the original in the feeder or on the platen glass matches the orientation of the paper loaded in the paper drawer.

- Setting Automatic Rotation:
  1. Press (Settings/Registration).
  2. Press [Function Settings] → [Copy] → [Auto Orientation].
  3. Select [On] → [OK].

Q26 Can I print on the reverse side of the preprinted paper?

A You can use [2nd Side of 2-Sided Page] for the Multi-Purpose Tray to print on paper already printed on.

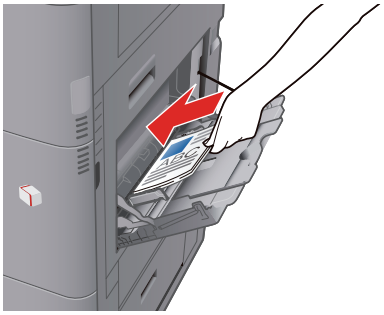

- To set:
  1. Load the paper in the multi-purpose tray with the side to print on face down.
  2. Select the paper size → press [Next].
  3. Select the paper type → press [2nd Side of 2-Sided Page] → [OK].
  4. Press (Start).

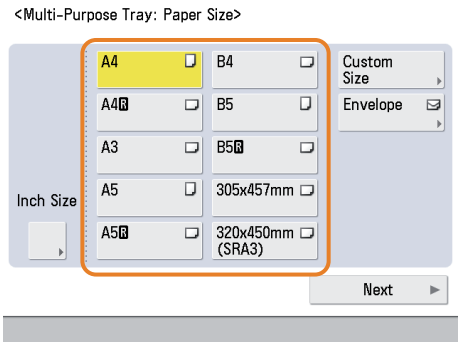

A paper jam is more likely to occur with paper already printed on compared to new paper.

Q27 Can I output paper to a different tray according to the function?

A

You can set the output tray for each function and set priorities for outputting paper.

* The output trays indicated by Tray A, B, and C differ according to the optional product attached to the machine.

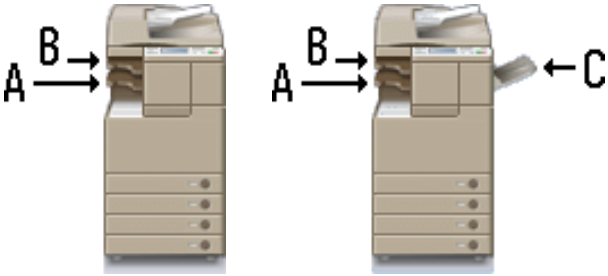

To set:

1. Press (Settings/Registration).
2. Press [Function Settings] → [Common] → [Paper Output Settings].
3. Press [Output Tray Settings].
4. Set the function and tray priority for Tray A, B, and C → press [OK].

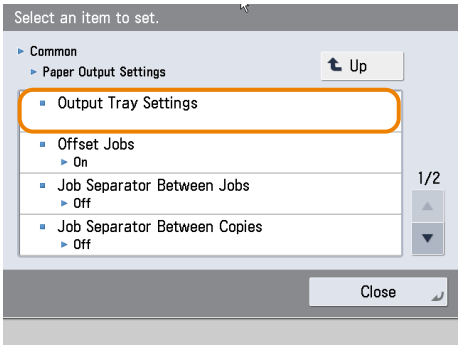

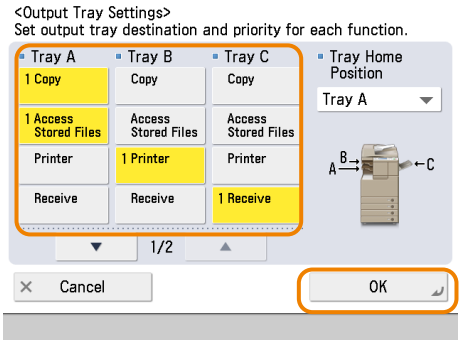

For more information on setting the output tray for each function, see e-Manual > Settings/Registration.

Q28 Can I print on envelopes?

A

Load the envelopes to print on the Multi-Purpose Tray.

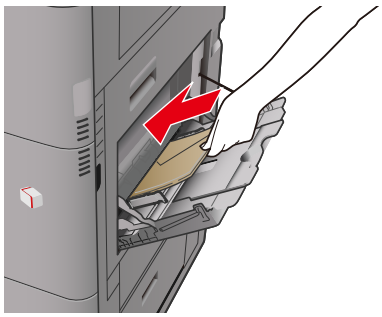

To set:

Take about five envelopes, fan them, and then stack them together. Place the envelopes on a level surface, and press all the way around the envelopes by hand to remove any air inside. Open the Multi-Purpose Tray, adjust the slide guides, and then load the envelopes, as shown below.

1. Load the envelopes.
2. Press [Envelopes] → select the desired envelope type → press [OK].
3. Press [OK].
4. Press (Start).

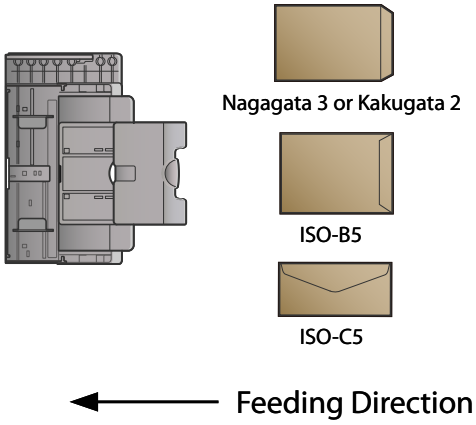

For more information, see e-Manual > Basic Operations.

Q29 What are the types of paper that I can use?

A You can load and print on the following paper.

Paper Drawer

- Paper Weight
  Cassette 1: 64 g/m² to 120 g/m²
  Cassette 2: 64 g/m² to 163 g/m²
- Paper Size
  Paper Drawers 1: A3, B4, A4, A4R, B5, B5R, A5R, or Custom size (148 mm x 182 mm to 297 mm x 420 mm)
  Paper Drawer 2: 305 x 457 mm, A3, B4, A4, A4R, B5, B5R, A5R, Custom size (140 mm x 182 mm to 304 mm x 457 mm), or Envelopes
  Envelopes can be loaded into Paper Drawer 2 only if the Envelope Feeder Attachment-D1 is attached.
- Types of Paper
  Cassette 1: Thin, Plain, Recycled, Color, Heavy, Pre-Punched, Bond
  Cassette 2: Thin, Plain, Recycled, Color, Heavy, Transparency, Pre-Punched, Bond, Envelopes
  Envelopes can be loaded into Paper Drawer 2 only if the Envelope Feeder Attachment-D1 is attached.

Multi-Purpose Tray

- Paper Weight
  64 g/m² to 220 g/m²
- Paper Size
  305 mm x 457 mm, 320 mm x 450 mm (SRA3), A3, B4, A4, A4R, A5, A5R, B5, B5R, Custom size (99 mm x 140 mm to 320 mm x 457 mm), or Envelopes
- Types of Paper
  Thin, Plain, Recycled, Color, Heavy, Coated, Tracing, Transparency, Pre-Punched, Labels, Bond, Envelopes

- When paper jams occur, you may be able to avoid the paper jam by loading the paper in the multi-purpose tray.
- For more information on the types of paper you can use, see e-Manual > Basic Operations.

Q30 What is the model number of the staple cartridge for the finisher or the stamp cartridge for the feeder?

A The consumables for the feeder and finisher are as follows:

- Product Name: Stamp Ink Cartridge-C1
  Notes: for the feeder
  for the DADF-AC1
- Product Name: Staple-J1
  Notes: for the Inner Finisher-C1

For information on replacing the stapling unit and stamp cartridges, see p. 65 to p. 68 in this manual.

Q31 A paper jam has occurred. How do I solve this problem?

A

How to clear the paper jam appears on the touch panel display. Follow the instructions to clear the paper jam.

- Fixing Unit (Inside the Main Unit)

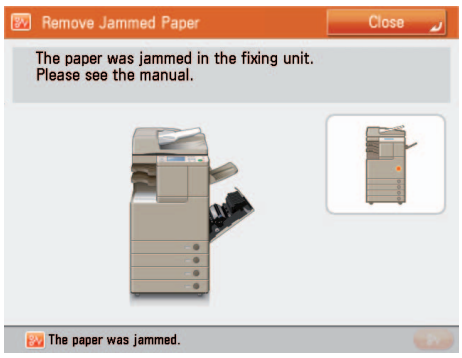

- Feeder

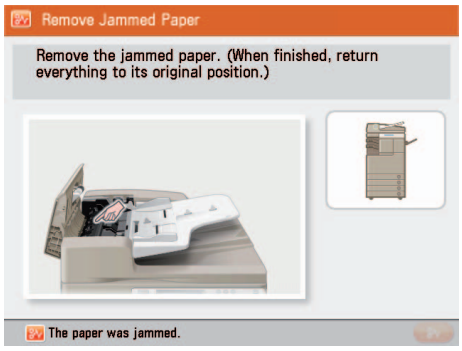

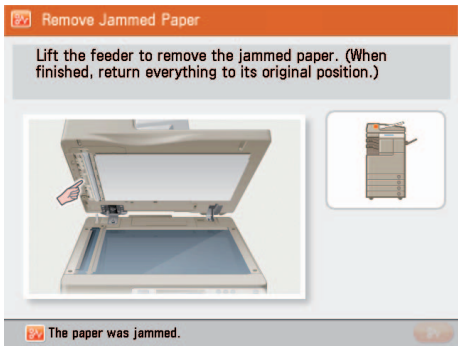

If the problem is still not resolved, see p. 82 to p. 103 in this manual.

Q32 Numbers such as #009 and #850 are displayed on the touch panel display. What does this mean?

A These are error codes indicating that a job or operation did not complete successfully. This is displayed on the Details screen from [Log] on the Status Monitor/Cancel screen.

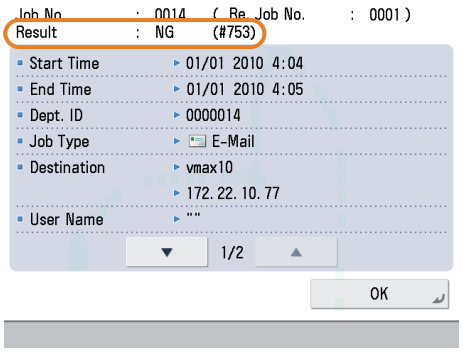

Perform the necessary procedures by referring to the cause and remedy for the error codes listed on p.151 to p.154 of this manual, the e-Manual > Scan and Send, or Sending/Receiving a Fax.

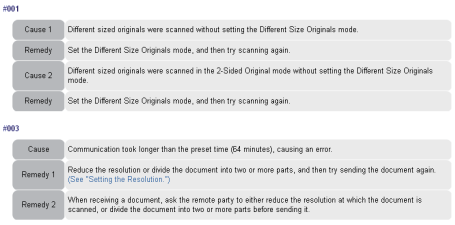

#001

Cause 1	Different sized originals were scanned without setting the Different Size Originals mode.
Remedy	Set the Different Size Originals mode, and then try scanning again.
Cause 2	Different sized originals were scanned in the 2-Sided Original mode without setting the Different Size Originals mode.
Remedy	Set the Different Size Originals mode, and then try scanning again.

#003

Cause	Communication took longer than the preset time (64 minutes), causing an error.
Remedy 1	Reduce the resolution or divide the document into two or more parts, and then try sending the document again. (See "Setting the Resolution.")
Remedy 2	When receiving a document, ask the remote party to either reduce the resolution at which the document is scanned, or divide the document into two or more parts before sending it.

For instructions on using (Status Monitor/Cancel), see e-Manual > Status Monitor/Cancel.

Q33 I cannot print from the computer. Did the machine malfunction?

A Check the following possible causes:

- Is the network cable disconnected?

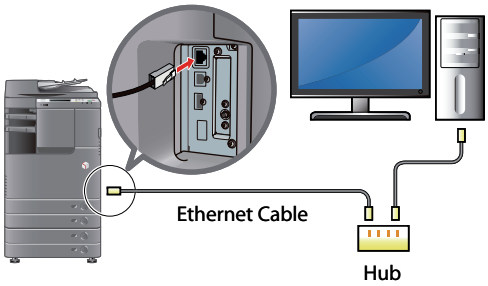

- Is it possible that there is a network trouble problem?
- Is the machine turned ON?

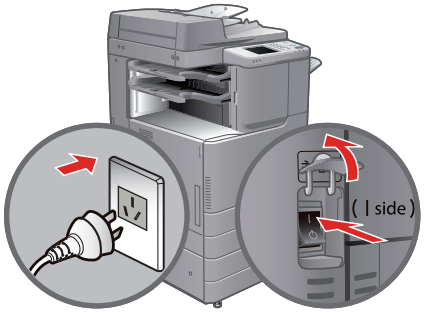

- Is there a paper jam or a toner shortage?
- Did you exceed the maximum number of prints set by the Department ID Management?

For network trouble or Department ID Management settings, contact your System Manager.

Q34 It seems as though turning OFF the machine is different from the previous iR. I am afraid that this may be a wrong operation.

A For the previous iR, you needed to press and hold the control panel power switch for more than three seconds before the machine goes to the Shutdown mode.

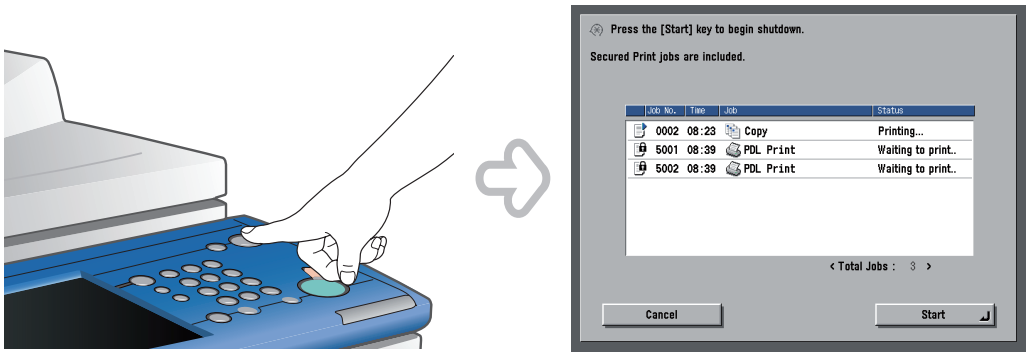

However, for the imageRUNNER ADVANCE, you just need to open the main power switch cover located on the right side of the machine, and push the main power switch toward the "⏻" side.

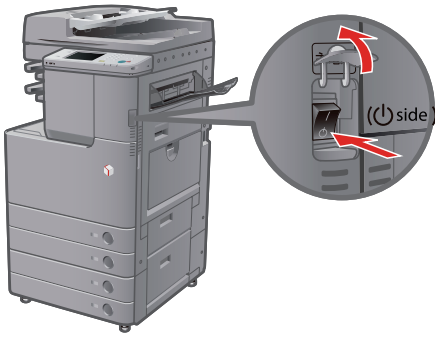

For more information, see "Before Using This Machine."

Q35 The touch panel display is completely black.

A The main power has not been turned ON, or the machine may have entered the Auto Sleep mode to save energy. Follow the procedure below.

Turning the Main Power ON:

1. Check whether the power plug is firmly inserted into the outlet.
2. Open the main power switch cover located on the right side of the machine and switch the main power switch to the "I" side to turn the power ON.

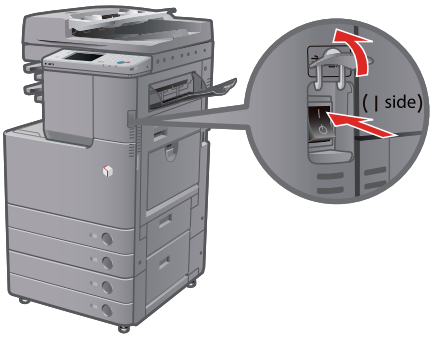

Recovering from the Auto Sleep Mode:

Press the control panel power switch.

- For more information on sleep mode, see e-Manual > Basic Operations.
- Follow the procedure below to change the Auto Sleep Time.
  1. Press (Settings/Registration).
  2. Press [Preferences] → [Timer/Energy Settings] → [Auto Sleep Time].
  3. Specify the time → press [OK].

Q36 I have just sent an important document via facsimile. Can I check to make sure that it was sent correctly?

A

You can check the send job status from the Status Monitor/Cancel screen or receive notification of the sending result via e-mail.

To check from the Status Monitor/Cancel screen:

1. Press (Status Monitor/Cancel).
2. Press [Send] → [Log].

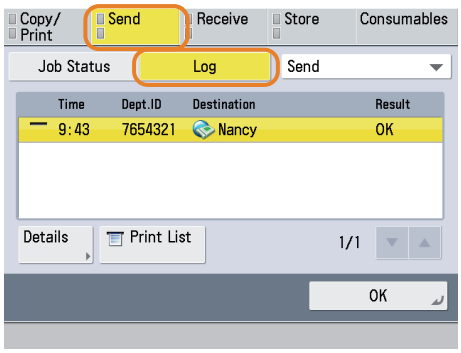

To receive send result via e-mail:

1. Press [Fax] → [Options] → [Job Done Notice].
2. Specify the e-mail address to receive the result notification with.

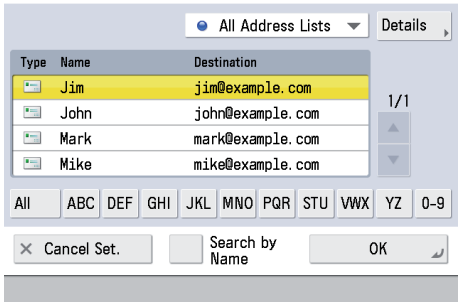

If the Fax TX Report is set, you can output and check the Fax TX Report every time. Also, if the Fax Activity Report is set, you can output and check Fax Report from the past. For more information, see e-Manual > Basic Operations.
You can only specify an e-mail address that is registered in the address book.

Q37 I had printed from the computer, but I did not find the output. I am afraid that someone may have taken it by mistake.

A You can check the Print Logs from the touch panel display of this machine. If the job is listed as 'OK' on the Log and you did not find the output, the print job may have intermixed with another user's output.

- To check:
  1. Press (Status Monitor/Cancel).
  2. Press [Copy/Print] → [Log] → press the drop-down list.
  3. Select the type of jobs to display.

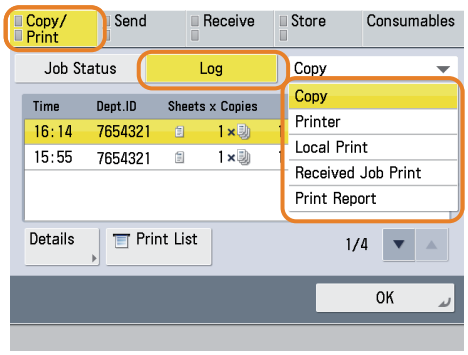

When printing from the computer, you can set a password for printing (Secured Printing). You can prevent from another user taking the output by mistake or prevent left behind outputs because the print job cannot be started until the password is entered on the touch panel display of the machine. For more information, see e-Manual > Secured Print or Practical Workflows.

Q38 What is MEAP?

A MEAP stands for Multifunctional Embedded Application Platform and is a software platform for the Canon multitasking machines.
You can expand the functions or customize them by installing the MEAP application from the computer to the multitasking machine.

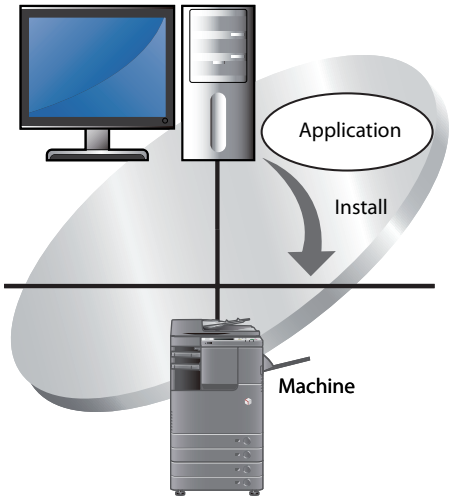

For more information, see e-Manual > MEAP.

MEMO

Self-Diagnostic Display

This section describes the messages that appear on the touch panel display and the method for resolving them. Follow the message that appears to perform the required operation.
A message appears in the following cases:

- When scanning or printing could not be performed due to a mistaken operation
- When a user decision or operation is required during the scanning or printing operation
- When a user decision or operation is required while accessing a network

A list of messages, causes, and remedies is indicated below.

For information on messages that are not included here, see e-Manual > Scan and Send, Sending/Receiving a Fax, and Network.

Message	Cause	Remedy
Prepare a new waste toner container and open the waste toner cover behind the left part of the device.	Printing cannot be performed because the waste toner container is full.	Replace the waste toner container. (See p. 73)
Preparing for color printing. Please wait.	The machine is performing automatic adjustment.	Please wait. When the adjustment is complete, color printing will automatically resume.
Place the original on the platen glass.	A mode requiring an original to be placed on the platen glass is set. There is no original on the platen glass.	Place the original on the platen glass.
Remove the original from the platen glass.	An original remains on the platen glass.	Remove the original remaining on the platen glass, and place the original again.
Original scanning area (thin glass strip) is dirty.	The original scanning area (thin glass strip) is dirty due to foreign material.	Clean the original scanning area of the feeder. (See p. 75)
Return the originals to their correct order, then press the [Start] key.	Scanning stopped because an unspecified problem occurred in the feeder.	Return the originals to their correct order. Place the originals back into the feeder's original supply tray, and press (Start).
Return the originals to their correct order, then press the [Start] key. (The data size of the scanned original exceeded the limit. Settings will be automatically corrected and the originals will be scanned again.)	Scanning was canceled because the data size of the scanned originals exceeded the maximum size that the machine can handle.	Scan the originals again from the first page. If you still cannot scan the originals, you may be able to resolve the problem by decreasing the sharpness or setting the original type to the Text mode.
The most proper size A4 is not available.	The optimal paper size selected with automatic paper selection is not loaded.	If this message appears even though the displayed paper size is loaded, set [Paper Drawer Auto Selection On/Off] for the desired paper drawer to 'On'. (See e-Manual > Settings/Registration.) Load paper of the displayed size. If you press (Start) without loading the paper, the paper loaded in the currently selected paper drawer will be printed on.
Adjusting gradation. Wait a moment...	The machine is performing automatic adjustment.	Please wait. When the adjustment is complete, printing will automatically resume.
Yellow toner is low. Replacement not yet needed.	Toner of the displayed color is running low.	Prepare a toner cartridge of the displayed color. (See p. 69)
Replace toner cartridge. (Magenta)	Printing will soon not be possible because the toner of the displayed color is running out.	Replace the toner cartridge of the displayed color. (See p. 69)
Insert toner cartridge. (Cyan)	The toner cartridge of the displayed color is not inserted correctly.	Insert the toner cartridge correctly. (See p. 69)

Message	Cause	Remedy
Replace toner cartridge. (Black)	Printing is not possible because toner of the displayed color has run out.	Replace the toner cartridge of the displayed color. (See p. 69)
Replace toner cartridge. (Black copying is possible.)	Color copying is not possible because toner of the displayed color has run out.	Replace the toner cartridge of the displayed color. (See p. 69)
Replace toner cartridge. (Black printing is possible.)	Color printing is not possible because toner of the displayed color has run out.	Replace the toner cartridge of the displayed color. (See p. 69)
Cleaning the drum... Please wait a moment...	The machine is cleaning its drum.	Wait for the machine to finish cleaning the drum. When cleaning is complete, printing automatically resumes.
The Dept. ID or PIN is incorrect.	The entered Department ID and password is not registered.	Contact your System Manager for the department to find out the Department ID and password.
Remove the paper from the output tray.	Previous prints remain in the tray.	Remove the paper that remains in the tray. Printing will start or resume automatically.
Remove the original from the feeder.	There is an original loaded in the feeder and on the platen glass when a mode that cannot scan originals loaded in the feeder is set.	Remove the original from the feeder.
Cannot send because the memory is full. Wait a moment, then try again.	Sending could not be performed because the memory is full.	Lower the resolution, and perform sending again. Delete any unnecessary files in the Fax/I-Fax Inbox to free up the memory. (See e-Manual > Fax/I-Fax Inbox.) If this problem occurs frequently, contact your local authorized Canon dealer.
Load paper.	The paper drawer is not inserted correctly.	Insert the paper drawer as far as it will go. (See p. 53)
	Printing cannot be performed because the paper has run out.	Load some paper. (See p. 53)
Scanning was stopped because the data size of the original exceeded the limit. Scanning may be possible if data compression ratio is set to high, resolution is set lower, or sharpness is reduced.	Scanning was canceled because the data size of the scanned originals exceeded the maximum size that the machine can handle.	You may be able to resolve the problem by decreasing the sharpness or setting the original type to the Text mode.

List of Error Codes without Messages

When a job or operation is not completed normally, check the error code, and perform the corresponding operation that is required.
Error codes can be checked on the Details screen from [Log] on the Status Monitor/Cancel screen. (See e-Manual > Status Monitor/Cancel.)

NOTE

For sending, receiving, and fax jobs, the error code is printed in the transmission result field on the Communication Management Report or TX Report. (See e-Manual > Basic Operations)

Perform the operation required for the error code.

When you cancel a send job, "STOP" is printed in the results field.

Error Code	Cause	Remedy
#001	Different size originals were scanned without the Different Size Originals mode set.	Check the originals and the settings, and perform the operation again.
	Both sides of different size originals were scanned without the Different Size Originals mode set.	
#009	There is no paper.	Load some paper.
	The paper drawer is not inserted correctly.	Insert the paper drawer correctly.
#099	The current job was interrupted.	Try processing the job again.
	An error occurred because the main power switch was turned OFF while executing a job.	Check whether the main power switch is turned ON, and perform the operation again, as necessary. (See "Before Using This Machine.")
#401	The storage location is full, or the number of files that can be saved in the root directory (the top level folder inside the memory media) has been exceeded.	Delete unnecessary files from the storage location, or create a new folder and move existing files to that folder to create room in the root directory.
#402	The image transfer failed when transferring to the memory media because an invalid character (such as \) was included in the specified filename.	Change the filename to the correct filename.
#403	The file could not be saved because a file with the same name already exists. Normally, automatic renaming is performed to append a number between 1 and 999 to the filename when a file with the same name exists, but the file could not be saved because files with the numbers 1 to 999 appended to them already exist.	Change the filename and save the file again.
#404	Writing failed because the write protect switch of the memory media was enabled.	Disable the write protect switch of the memory media.
#406	Writing failed because the memory media was removed or the other Advanced Box on the network was deleted while writing a file to memory media or another Advanced Box on the network.	Check that the memory media is inserted or the other Advanced Box on the network has not been deleted, and write the file again.
	The image transfer failed when transferring and storing to the memory media because an unspecified error occurred. (The connected memory media may be formatted with an unsupported file system.)	Check the status of the memory media and confirm that it is formatted with a file system supported by the machine (FAT32). Then, try performing the procedure again.
	The file size exceeded the maximum size that the machine can handle.	Lower the resolution or reduce the number of pages, and perform the operation again.
#407	The length of the full path to the specified file (or folder) exceeds the maximum supported length.	Change the filename so that the length of the full path is within 256 characters, or change the destination folder.
#409	The files or folders cannot be stored because the number of files or folders that can be stored has reached the limit.	Change the storage.

Error Code	Cause	Remedy
#410	The files cannot be stored because there are too many jobs waiting to be stored.	Try storing the files again after the previous job finishes being stored.
#411	The files are already locked by the other operations.	Wait a while, and perform the operation again.
#701	The specified Department ID does not exist, or the password has changed.	Enter the correct Department ID and password using ⓪ - ⑨ (numeric keys), and try again.
	The Department ID or password was changed while the machine was processing a job.	Change the Department ID and password, and try again. If you do not know the password, contact your System Manager.
	<Allow Printer Jobs With Unknown IDs>/<Allow Remote Scan Jobs With Unknown IDs> is set to 'Off'.	Set <Allow Printer Jobs With Unknown IDs>/<Allow Remote Scan Jobs With Unknown IDs> to 'On'. (See e-Manual > Settings/ Registration)
#703	Writing could not be performed because the image region of the memory is full.	Please wait. Try sending again when the other sending jobs are complete.
		Delete files in the Fax/I-Fax Inbox. If the operation still cannot be performed correctly, restart the machine.
#711	The Fax/I-Fax Inbox is full.	Delete files in the Fax/I-Fax Inbox.
#712	The maximum number of files is saved in the Fax/I-Fax Inbox.	Delete files in the Fax/I-Fax Inbox.
#749	The operation could not be performed because a service call message is displayed.	Turn the main power switch OFF, wait at least 10 seconds, and then turn the main power switch ON again. If the operation still cannot be performed correctly, turn the main power switch OFF, remove the power plug from the outlet, and contact your local authorized Canon dealer.
#754	The client machine is not functioning while delivering the device information or the network is down. The destination setting is not correct.	Check the client machine and network. Check the destination settings.
#807	You do not have access privileges for the specified directory.	Set access privileges for the server directory, or send to a directory that you have access privileges for. Alternatively, contact your System Manager.
#816	Printing could not be performed because the maximum number of prints set in Department ID Management was exceeded.	Contact your System Manager.
#821	You have received data that cannot be processed (TIFF analysis error).	Check the settings, and ask the sender to resend the data.
#825	Printing could not be performed because the Department ID and password for a reserved or executing printer job were deleted, or the password was changed.	Enter the new Department ID and password, and perform the operation again. Register the Department ID and password. If you do not know the new password, contact your System Manager.
	Device information could not be delivered because the destination client machine has a system manager registered, but the system manager is not set on the host machine. Or, device information could not be delivered because the System Manager ID and System Password registered in the client machine are different from the System Manager ID and System Password registered in the host machine.	Register the same System Manager ID and System Password in the client machine as the System Manager ID and System Password registered in the host machine, and deliver the device information again.

Error Code	Cause	Remedy
#849	Device information could not be delivered because the destination client machine is executing a job.	Deliver the device information again after the destination client machine has finished executing its job.
#850	Device information could not be delivered because the destination client machine is operating a screen related to the device information.	Check the device information that was not delivered, and deliver the device information again.
#851	The memory of the machine is full.	Check the memory of the machine, and erase unnecessary files in the Fax/I-Fax Inbox.
	The image region of the memory is full.	Delete any error jobs or unnecessary files to increase the amount of available memory.
	The scanned document cannot be stored because the number of documents stored in the inbox specified for the specified Fax/I-Fax Inbox has exceeded the upper limit.	Delete files in the Fax/I-Fax Inbox.
#852	An error occurred because the main power was turned OFF due to an unspecified cause while a job was being processed.	Check to see that the power plug is firmly inserted into the power outlet and that it is not in a situation where the power can easily be turned OFF. Try processing the job again, if necessary.
#853	The job could not be executed when you tried to print a large number of pages on the printer, due to insufficient resources.	Reduce the number of pages to print, or execute the job again when there are no other print jobs reserved.
	When sending print data to the machine from a computer, the job could not be executed because it was canceled from the printer driver.	Perform the operation again.
	The spool region for the received data became full and all the data from the host could not be spooled with [Use Spool Function] set to 'On' in [Network] in [Preferences] (Settings/Registration).	Set [Use Spool Function] to 'Off' in [Network] in [Preferences] (Settings/Registration), and perform the operation again.
	The maximum received data size was exceeded when processing the received data.	Perform printing again when all the jobs are complete. If you still cannot perform printing, check the sent data.
	The maximum number of secure jobs that can be received at the same time was exceeded.	Execute or erase a secure job stored in the machine, and perform the operation again.
#854	Device information was delivered from a machine of a different model group with [Restrict Receiving Device Information] set to 'On' in [Device Information Delivery Settings] in [Management Settings] (Settings/Registration) on the destination client machine.	Set [Restrict Receiving Device Information] to 'Off' in [Device Information Delivery Settings] in [Management Settings] (Settings/Registration), and deliver the device settings again.
#855	Device information could not be delivered because it included a language that cannot be handled by the destination client machine.	Contact your local authorized Canon dealer.
#856	The job was canceled because the memory for saving temporary data became full.	Contact your System Manager.
#857	Data reception timed out or the job was canceled on the host.	Check the network status, and perform printing again.
#858	A problem occurred in the print data.	Change the print data or print settings, and perform printing again.
#859	A compression error occurred in the original data.	Check the originals and the settings, and perform the operation again.
	The original could not be scanned correctly, or there was an error in the orientation of the original.	Check the originals and the settings, and perform the operation again.
		Turn the main power OFF, wait for 10 or more seconds, and turn the main power back ON.

Error Code	Cause	Remedy
#860	A paper jam occurred during printing.	Perform printing again.
	Transparencies not made for the machine was used.	Perform printing again using transparencies made for the machine.
	You have sent a print job using a PDL that is not supported by the machine.	Confirm the PDLs supported by the machine with your system administrator, and use the appropriate printer driver.
	An unsupported combination of functions was specified.	Change the print data resolution or other print settings, and perform printing again.
#861	An error occurred while processing the print data or image data.	Change the print data or print settings, and perform printing again.
#862	An unsupported combination of functions was specified.	Change the print data or print settings, and perform printing again.
	Data not guaranteed to be compatible was printed.	
#863	An error occurred while processing the print data or image data.	Check the settings, and perform the operation again.
#865	A function related to performing jobs is restricted.	Contact your System Manager.
	An attempt was made to execute a function requiring the hard disk, without the hard disk attached.	Check whether the hard disk is attached. If the hard disk is not attached, attach the hard disk and execute the same function again. If the hard disk is not attached, cancel the settings for functions requiring the hard disk.
#904	Destinations registered as favorite settings are not updated when an address book is retrieved using device information delivery from an another imageRUNNER ADVANCE/ imagePRESS series machine connected to the network.	Register the favorite settings again from the touch panel display of the machine.
#905	The job could not be executed because a network error occurred.	Check the path length and access privileges of the server, and whether the file or folder is in use.

Follow the procedure below to install the e-Manual.

Windows

1. Insert the e-Manual CD-ROM into your computer.
2. Select the language for the e-Manual.
3. Select [Install] or [Display Manual].

If you select [Install], the e-Manual is saved in the [Documents] folder on your computer. If the shortcut icon created on the Desktop or if the [index. html] file is double-clicked, the e-Manual is displayed.
If you select [Display Manual], the e-Manual is displayed.

* The folder name differs depending on your operating system. The folder name is [Documents] if you are using Windows Vista/7 and [My Documents] if you are using Windows 2000/XP.

Macintosh

1. Insert the CD-ROM into your computer.
2. Double-click the e-Manual icon, and drag-and-drop the [iRADV_C2030_Manual_eng] folder to the location you want to save it.
3. Double-click the index.html file inside the [iRADV_C2030_Manual_eng] folder to display the e-Manual.

- Depending on the operating system you are using, a security protection message may be displayed. In this case, allow the content to be displayed.
- When you start the e-Manual, the following page (the top page) appears.

If the e-Manual (CD-ROM) Does Not Start

The CD-ROM auto run function may be disabled. Perform the following operation.

- Windows 7
  1. Click [Start] on the taskbar → click [Computer].
  2. Double-click the e-Manual icon.
  3. Double-click start.exe.
- Windows XP/Vista
  1. Click [Start] on the taskbar → [My Computer].
  2. Double-click the e-Manual icon.
  3. Double-click start.exe.
- Windows 2000
  1. Double-click [My Computer] on the desktop.
  2. Double-click the e-Manual icon.
  3. Double-click start.exe.

1 Select from functions
The instructions of each function and operation method are described.

2 [Top]
The top page of the e-Manual is displayed.

3 [Contents]
The entire contents of the e-Manual are displayed.

4 [Help]
The usage of the e-Manual is displayed.

5 [Glossary]
The glossary is displayed.

6 Enter keyword(s) here
Enter a keyword in the search dialog box and click . The search results appear in a separate window.

7 First of all...
This section describes the required information to use the machine, and the information of optional product and software.

8 PDF manuals
Click to display the Basic Operation Guide and Setup Guide in the PDF format.

9 Select from purpose
This section includes the introduction of functions of the machine for each purpose.

10 [Office Locations]
Inquiries for the machine are displayed.

11 [Trademarks]
The trademarks are displayed.

12 [Copyright]
The information of copyrights is displayed.

13 [Disclaimer]
The disclaimers are displayed.

Performing a Search

Enter a keyword in the search dialog box and click .

Printing a Topic Page

- On a topic page, you can print by category or by topic.
- Depending on the settings of the Web browser, the background color and images of the topic page may not be printed.

MEMO

CANON INC.
30-2, Shimomaruko 3-chome, Ohta-ku, Tokyo 146-8501, Japan
CANON U.S.A., INC.
One Canon Plaza, Lake Success, NY 11042, U.S.A.
CANON CANADA INC.
6390 Dixie Road Mississauga, Ontario L5T 1P7, Canada
CANON EUROPA N.V.
Bovenkerkerweg 59-61 1185 XB Amstelveen, The Netherlands
(See http://www.canon-europe.com/ for details on your regional dealer)
CANON LATIN AMERICA, INC.
703 Waterford Way Suite 400 Miami, Florida 33126 U.S.A.
CANON AUSTRALIA PTY. LTD
1 Thomas Holt Drive, North Ryde, Sydney, N.S.W. 2113, Australia
CANON CHINA CO., LTD
15F Jinbao Building No.89 Jinbao Street, Dongcheng District, Beijing 100005, China
CANON SINGAPORE PTE. LTD.
1 HarbourFront Avenue #04-01 Keppel Bay Tower, Singapore 098632
CANON HONGKONG CO., LTD
19/F., The Metropolis Tower, 10 Metropolis Drive, Hunghom, Kowloon, Hong Kong

FT5-2772 (010)

© CANON INC. 2010