Canon

imageRUNNER
ADVANCE
C5051/C5045/C5035/C5030

Maintenance Guide

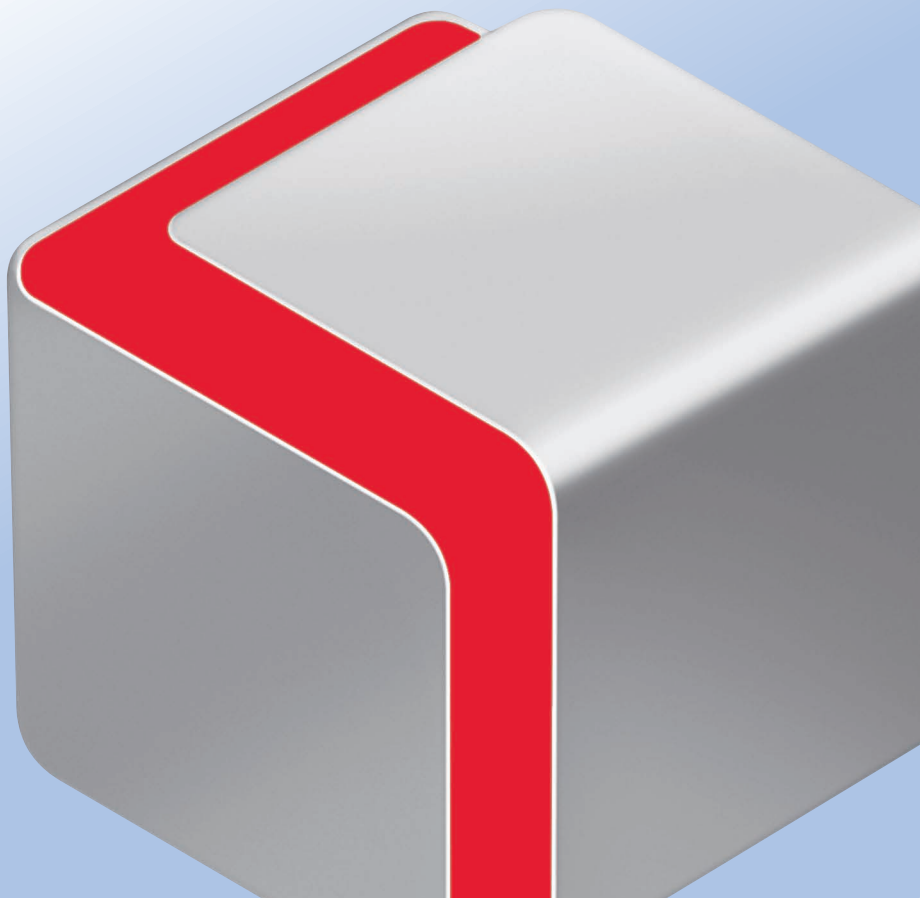

Please read this guide before operating this product.
After you finish reading this guide, store it in a safe place for future reference.

ENG

imageRUNNER ADVANCE C5051/C5045/C5035/C5030

Maintenance Guide

Manuals for the Machine

The manuals for this machine are divided as follows. Please refer to them for detailed information.

Guides with this symbol are printed manuals.

Guides with this symbol are included on the accompanying CD-ROM.

• **Precautions for Using Your Machine and Settings Required after Machine Installation**	**Getting Started**	Printed / CD-ROM
• **Quick Reference for Basic and Useful Operations**	**Quick Reference**	Printed / CD-ROM
• **Maintenance and Troubleshooting**	**Maintenance Guide (This Document)**	Printed / CD-ROM
• **Frequently Asked Questions and Answers**	**Frequently Asked Questions**	Printed / CD-ROM
• **Windows Printer Driver Installation and Instructions**	**Printer Driver Installation Guide**	CD-ROM
• **Mac Printer Driver Installation and Instructions** The Mac UFR II Driver Guide and the Mac PS Driver Guide	**Mac Printer Driver Installation Guide**	CD-ROM
• **Windows Fax Driver Installation and Instructions**	**Fax Driver Installation Guide**	CD-ROM
• **Windows Network ScanGear Installation and Instructions**	**Network ScanGear Installation Guide**	CD-ROM

•Comprehensive Manual for Basic Operations and Handling Your Machine

e-Manual

- Before You Start Using This Machine
- How to Use This Manual
- Basic Operations
- Optional Products
- Settings/Registration
- Problem Solving
- Maintenance
- Practical Workflows

- Copy
- Fax
- Scan and Send
- Scan and Store
- Access Stored Files
- Fax/I-Fax Inbox
- Secured Print
- Web Access
- Scanner
- Quick Menu
- Status Monitor/Cancel
- Print
- Network
- Remote UI
- MEAP
- Security
- Software

To view the manual in PDF format, Adobe Reader/Adobe Acrobat Reader is required. If Adobe Reader/Adobe Acrobat Reader is not installed on your system, please download it from the Adobe Systems Incorporated website.

How This Manual Is Organized

Chapter 1 Routine Maintenance

Chapter 2 Troubleshooting

Chapter 3 Appendix

Includes the index.

Considerable effort has been made to ensure that this manual is free of inaccuracies and omissions. However, as we are constantly improving our products, if you need an exact specification, please contact Canon.

Contents

Preface ..... **vii**
How To Use This Manual ..... **vii**
Symbols Used in This Manual vii
Keys Used in This Manual vii
Displays Used in This Manual viii
Illustrations Used in This Manual viii
Abbreviations Used in This Manual ix
Trademarks ix
Copyright ix
Disclaimers ix

Chapter 1 Routine Maintenance

Paper Drawers **1-2**
Loading Paper 1-2
Adjusting a Paper Drawer to Hold a Different Paper Size 1-5
Paper Deck Unit-B1 (Optional) **1-7**
Loading Paper 1-7
Tab Feeding Attachment Kit-B1 (Optional) **1-10**
How to Load Tab Paper 1-10
Loading Tab Paper into the Paper Drawer 1-10
Envelope Feeder Attachment-D1 (Optional) **1-13**
How to Use the Envelope Feeder Attachment 1-13
Preparing the Envelopes 1-14
Loading Envelopes 1-15
Loading the Envelope after Specifying the Size 1-18
Feeder (Replacing the Stamp Cartridge) **1-23**
Replacing the Stamp Cartridge (Duplex Color Image Reader Unit-B1) 1-23
Replacing the Stamp Cartridge (Color Image Reader Unit-B1) 1-26
Inner Finisher-A1 (Optional) **1-28**
Replacing the Staple Cartridge 1-28
Staple Finisher-C1/Booklet Finisher-C1/Puncher (Optional) **1-31**
Replacing the Staple Cartridge in the Stapler Unit 1-31
Replacing the Staple Cartridge in the Saddle Stitcher Unit 1-34
Removing Punch Waste 1-37
Replacing the Toner Cartridge **1-39**
Replacing the Waste Toner Container **1-44**
Routine Cleaning **1-47**
Platen Glass and Cover 1-47
Manual Feeder Cleaning 1-48
Duplex Color Image Reader Unit-B1 1-48
Color Image Reader Unit-B1 1-51
Automatic Feeder Cleaning 1-54
Cleaning the Inside of the Main Unit 1-55
Cleaning the Dust Proof Glass 1-55
Consumables **1-57**

Chapter 2 Troubleshooting

Reducing the Frequency of Paper Jams **2-2**
Clearing Paper Jams **2-3**
Screens Indicating the Locations of Paper Jams 2-3
Paper Output Unit (Inside the Main Unit) 2-5
Fixing Unit (Inside the Main Unit) 2-7
Entrance of Duplexing Unit (Inside the Main Unit) 2-8
Duplexing Unit (Inside the Main Unit) 2-10
Multi-Purpose Tray 2-11
Paper Drawer 1 2-13
Paper Drawer 2 2-15
Cassette Feeding Unit-AD1 (Optional) 2-18
Paper Deck Unit-B1 (Optional) 2-20
Feeder (Optional) 2-23
Inner Finisher-A1 (Optional) 2-26

Inside the Top Cover of the Staple Finisher-C1/Booklet Finisher-C1 (Optional) 2-29
Inside the Buffer Pass Unit-G1 of the Staple Finisher-C1/Booklet Finisher-C1 (Optional) 2-30
Inside the Front Cover of the Booklet Finisher-C1 (Optional) 2-31
Saddle Stitcher Unit (Optional) 2-33
Puncher (Optional) 2-36
Inner 2Way Tray-F1 (Optional) 2-38
Copy Tray-J1 (Optional) 2-40

Clearing Staple Jams 2-42
Inner Finisher-A1 (Optional) 2-42
Staple Finisher-C1/Booklet Finisher-C1 (Optional) 2-44
Saddle Stitcher Unit (Optional) 2-46

List of Error Messages 2-50
Self-Diagnostic Display 2-50
List of Error Codes without Messages 2-53

If Memory Becomes Full during Scanning 2-59
For the Copy function 2-59
For the Fax/Scan and Send function 2-59
For the Scan and Store function 2-60

Service Call Message 2-61
Contacting Your Local Authorized Canon Dealer 2-61
Setting the Limited Functions Mode from the Service Call Message Screen 2-62
Functions Available When the Printer/Scanner Cannot Be Used Due to an Error 2-63

When the Power Does Not Turn ON 2-65

Printer/Fax Driver Troubleshooting 2-66

Chapter 3 Appendix

Index 3-2

Preface

Thank you for purchasing the Canon imageRUNNER ADVANCE C5051/C5045/C5035/C5030. Please read this manual thoroughly before operating the product to familiarize yourself with its capabilities, and to make the most of its many functions. After reading this manual, store it in a safe place for future reference.

How To Use This Manual

Symbols Used in This Manual

The following symbols are used in this manual to explain procedures, restrictions, handling precautions, and instructions that should be observed for safety.

WARNING	Indicates a warning concerning operations that may lead to death or injury to persons if not performed correctly. To use the machine safely, always pay attention to these warnings.
CAUTION	Indicates a caution concerning operations that may lead to injury to persons, or damage to property if not performed correctly. To use the machine safely, always pay attention to these cautions.
IMPORTANT	Indicates operational requirements and restrictions. Be sure to read these items carefully to operate the machine correctly, and avoid damage to the machine.
NOTE	Indicates a clarification of an operation, or contains additional explanations for a procedure. Reading these notes is highly recommended.

Keys Used in This Manual

The following symbols and key names are a few examples of how keys to be pressed are expressed in this manual:

- Touch Panel Display Keys: [Key Name]
  Example: [Cancel]
  [Close]

- Control Panel Keys: Key Icon (Key Name)
  Example: (Start)
  (Stop)

Displays Used in This Manual

Screen shots of the touch panel display used in this manual are those taken when the following optional equipment is attached to the imageRUNNER ADVANCE C5051 : the Duplex Color Image Reader Unit-B1, Super G3 FAX Board, Inner Finisher-A1, and Cassette Feeding Unit-AD1.

Note that functions that cannot be used depending on the model or options, are not displayed on the touch panel display.

The keys which you should press are marked with a ⬭, as shown below.

When multiple keys can be pressed on the touch panel display, all keys are marked. Select the keys which suit your needs.

Screen shots used in this manual may differ from the ones you actually see.

3 **Select the colour of the toner you want to replace from the display on the control panel → press [Remove Toner Cartridges].**

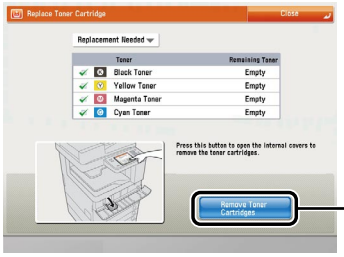

Press this key for operation.

Illustrations Used in This Manual

Illustrations used in this manual are those displayed when the imageRUNNER ADVANCE C5051 has the following optional equipment attached to it: the Duplex Color Image Reader Unit-B1, Super G3 FAX Board, Inner Finisher-A1, and Cassette Feeding Unit-AD1.

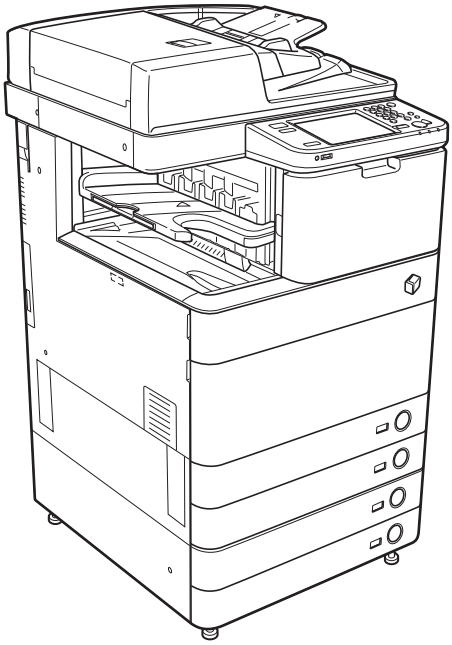

Abbreviations Used in This Manual

In this manual, product names and model names are abbreviated as follows:

Microsoft Windows operating system:	Windows
Apple Mac:	Mac

Trademarks

Apple and Mac are trademarks of Apple Inc., registered in the U.S. and other countries.

Windows is a trademark or a registered trademark of Microsoft Corporation in the U.S. and/or other countries.

Other product and company names herein may be the trademarks of their respective owners.

Copyright

Copyright 2010 by Canon Inc. All rights reserved.

No part of this publication may be reproduced or transmitted in any form or by any means, electronic or mechanical, including photocopying and recording, or by any information storage or retrieval system without the prior written permission of Canon Inc.

Disclaimers

The information in this document is subject to change without notice.

CANON INC. MAKES NO WARRANTY OF ANY KIND WITH REGARD TO THIS MATERIAL, EITHER EXPRESS OR IMPLIED, EXCEPT AS PROVIDED HEREIN, INCLUDING WITHOUT LIMITATION, THEREOF, WARRANTIES AS TO MARKETABILITY, MERCHANTABILITY, FITNESS FOR A PARTICULAR PURPOSE OF USE OR AGAINST INFRINGEMENT OF ANY PATENT. CANON INC. SHALL NOT BE LIABLE FOR ANY DIRECT, INCIDENTAL, OR CONSEQUENTIAL DAMAGES OF ANY NATURE, OR LOSSES OR EXPENSES RESULTING FROM THE USE OF THIS MATERIAL.

Routine Maintenance

1

CHAPTER

This chapter describes how to load paper, perform routine cleaning operations, and replace consumables, such as toner and staple cartridges.

Paper Drawers 1-2
Loading Paper 1-2
Adjusting a Paper Drawer to Hold a Different Paper Size 1-5

Paper Deck Unit-B1 (Optional) 1-7
Loading Paper 1-7

Tab Feeding Attachment Kit-B1 (Optional) 1-10
How to Load Tab Paper 1-10
Loading Tab Paper into the Paper Drawer 1-10

Envelope Feeder Attachment-D1 (Optional) 1-13
How to Use the Envelope Feeder Attachment 1-13
Preparing the Envelopes 1-14
Loading Envelopes 1-15
Loading the Envelope after Specifying the Size 1-18

Feeder (Replacing the Stamp Cartridge) 1-23
Replacing the Stamp Cartridge (Duplex Color Image Reader Unit-B1) 1-23
Replacing the Stamp Cartridge (Color Image Reader Unit-B1) 1-26

Inner Finisher-A1 (Optional) 1-28
Replacing the Staple Cartridge 1-28

Staple Finisher-C1/Booklet Finisher-C1/Puncher (Optional) 1-31
Replacing the Staple Cartridge in the Stapler Unit 1-31
Replacing the Staple Cartridge in the Saddle Stitcher Unit 1-34
Removing Punch Waste 1-37

Replacing the Toner Cartridge 1-39

Replacing the Waste Toner Container 1-44

Routine Cleaning 1-47
Platen Glass and Cover 1-47
Manual Feeder Cleaning 1-48
Automatic Feeder Cleaning 1-54
Cleaning the Inside of the Main Unit 1-55
Cleaning the Dust Proof Glass 1-55

Consumables 1-57

Paper Drawers

This section describes how to load paper into the paper drawers.

NOTE

- The following paper sizes can be loaded into Paper Drawers 1, 2, 3, and 4.
  - Paper Drawer 1: Custom size (139.7 mm × 182 mm to 304.8 mm × 390 mm), B4, A4, A4R, B5, B5R and A5R
  - Paper Drawer 2: Custom size (139.7 mm × 182 mm to 304.8 mm × 457.2 mm), 305mm × 457mm, A3, B4, A4, A4R, B5, B5R, A5R, Tab, and envelopes
  - Paper Drawer 3, 4: Custom size (139.7 mm × 182 mm to 304.8 mm × 457.2 mm), 305mm × 457mm, A3, B4, A4, A4R, B5, B5R and A5R
  - Tab paper can be loaded into Paper Drawer 2 only if the Tab Feeding Attachment Kit-B1 is attached.
  - Envelopes can be loaded into Paper Drawer 2 only if the Envelope Feeder Attachment-D1 is attached.
  - Paper Drawers 3 and 4 can only be used if the Cassette Feeding Unit-AD1 is attached.
- For more information on available paper stock that can be loaded into the paper drawers, see e-Manual > Basic Operations.

Loading Paper

If the selected paper runs out, or the selected paper drawer runs out of paper during printing, a screen prompting you to load paper appears on the touch panel display.

Follow the procedure below to load paper into the paper drawers.

CAUTION

When loading paper, take care not to cut your hands on the edges of the paper.

IMPORTANT

- A screen prompting you to load paper also appears if the selected paper drawer is not fully inserted into the machine. Make sure that the paper drawer is properly in place.
- Do not load the following types of paper into the paper drawers. Doing so may cause a paper jam.
  - Severely curled or wrinkled paper
  - Thin straw paper
  - Heavy 3 paper 210 to 256g/m^2
  - Paper which has been printed on using a thermal transfer printer (Do not print on the reverse side of this paper either.)
- Fan the stack of paper well before loading it. Paper such as thin paper, recycled paper, pre-punched paper, heavy paper, transparencies, and tab papers should be fanned particularly well before loading it.
- Never place paper or any other items in the empty part of the drawer next to the paper stack. Doing so may cause paper jams.

NOTE

- If a message prompting you to load paper appears during printing, the remaining prints are automatically made after you load the correct paper. If you select another paper drawer, the remaining prints are made after you press [OK].
- To cancel printing, press [Stop].

1 **Press and release the button on the paper drawer in which you want to load paper.**

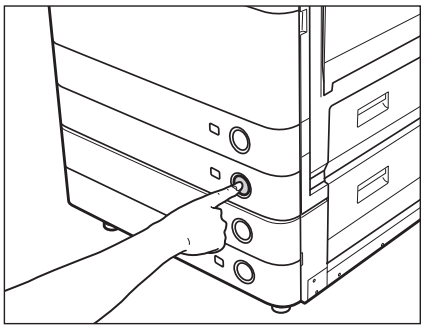

2 Grip the handle, and pull out the paper drawer until it stops.

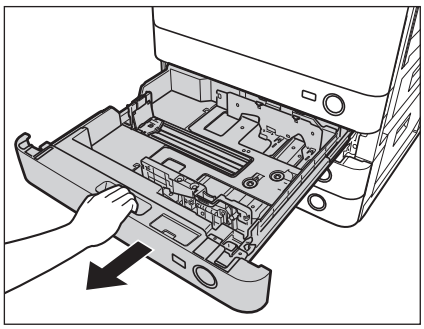

3 Open a package of paper, and remove the paper stack.

CAUTION

When loading paper, take care not to cut your hands on the edges of the paper.

IMPORTANT

- Rewrap any remaining paper in its original package, and store it in a dry place, away from direct sunlight.
- If you print on the paper which has absorbed moisture, steam may come out from the output area of the machine. This is because the moist on the paper evaporates when the high temperature is applied when a toner is fixed to the paper. It is not a malfunction. (This especially happens in low room temperature.)

NOTE

- For high-quality printouts, use paper recommended by Canon.
- Before loading paper, always fan the sheets several times, and align the edges to facilitate feeding.

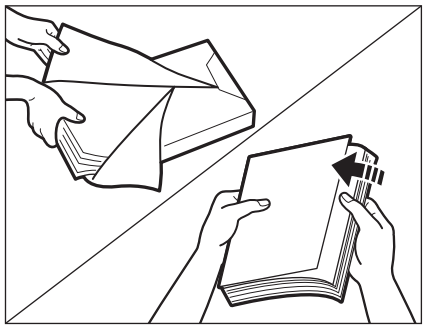

4 Load the paper stack into the paper drawer.

Even out the edges of the paper stack. Load the paper stack against the right wall of the paper drawer.

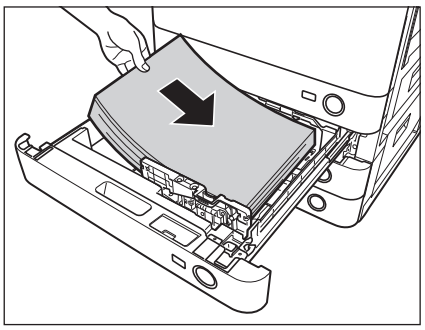

IMPORTANT

- Paper which has been rolled or curled must be straightened out prior to use.
- Make sure that the height of the paper stack does not exceed the loading limit mark ( ) at the back of the paper drawer.

NOTE

- Each paper drawer holds approximately 550 sheets of paper (80 g/m^2).
- If there are instructions on the package of paper about which side of the paper to load, follow those instructions.
- When the paper is loaded into the paper drawer, the side facing up is the one printed on.
- If problems occur, such as poor print quality or paper jams, try turning the paper stack over, and reload it.
- For more information on the print direction of preprinted paper (paper which has logos or patterns already printed on it), see Chapter 17, "Appendix," in *Getting Started*.

5 Gently push the paper drawer back into the machine until it clicks into place in the closed position.

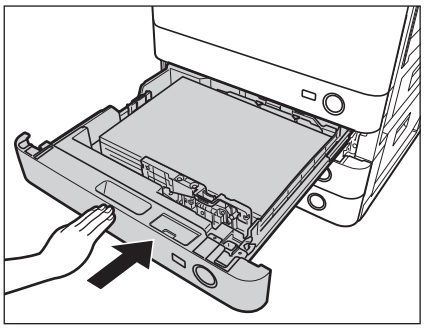

CAUTION

When returning the paper drawer to its original position, be careful not to get your fingers caught, as this may result in personal injury.

IMPORTANT

You will not be able to make copies or print if you load paper that exceeds the loading limit, or if the paper drawer is not completely pushed into the machine. Always check that the paper drawers are in place, and that the paper does not exceed the loading limit.

NOTE

If paper runs out during copying or printing, load a new paper stack, and follow the instructions on the touch panel display. The machine automatically restarts, and produces the remaining copies or prints.

Adjusting a Paper Drawer to Hold a Different Paper Size

If you want to load a different paper size into a paper drawer, follow the procedure described below to adjust the paper drawer guides.

IMPORTANT

Only A4 transparencies can be used. Make sure that the left guide is set to 'A4' when loading transparencies in a paper drawer. If transparencies of a different size (other than A4) are loaded in a paper drawer, the paper size and remaining amount of paper will not be detected correctly.

1 **Press and release the button on the paper drawer that you want to adjust. Grip the handle, and pull out the paper drawer until it stops. Remove all of the remaining paper.**

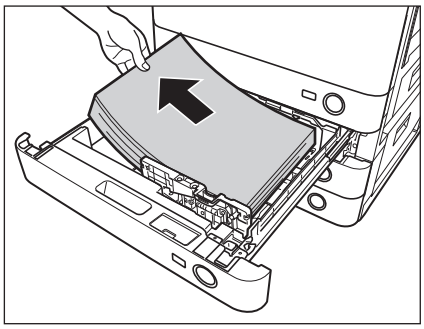

2 **Slide the left guide to align it with the mark for the desired paper size.**

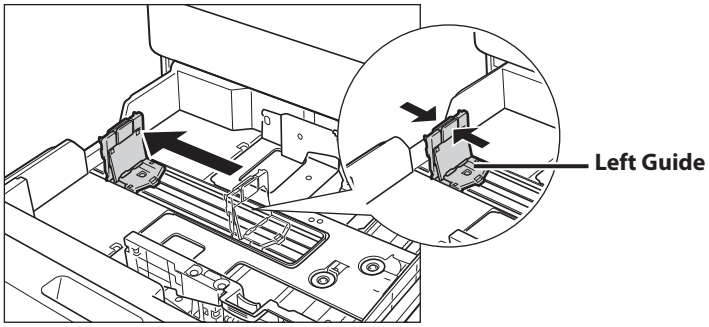

Slide the guide until it clicks.

3 **Squeeze the lever on the front guide, as shown below. Without releasing the lever, slide the front guide to align it with the mark for the desired paper size.**

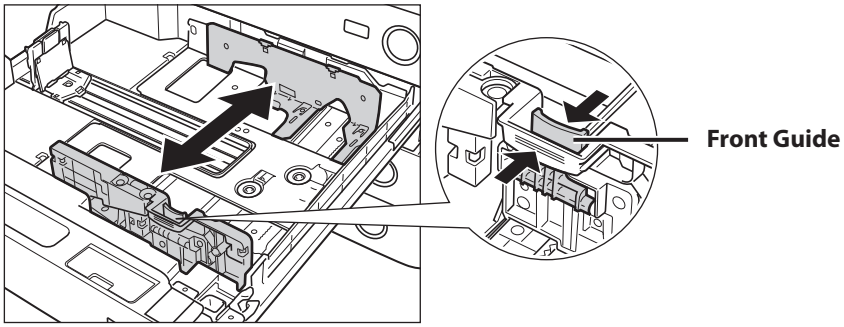

Slide the guide until it clicks.

IMPORTANT

Adjust the guides correctly to avoid causing a paper jam, dirty prints, or making the inside of the machine dirty.

4 Load the appropriate size paper into the paper drawer.

CAUTION

When loading paper, take care not to cut your hands on the edges of the paper.

5 Change the paper drawer's paper size plate to match the new paper size.

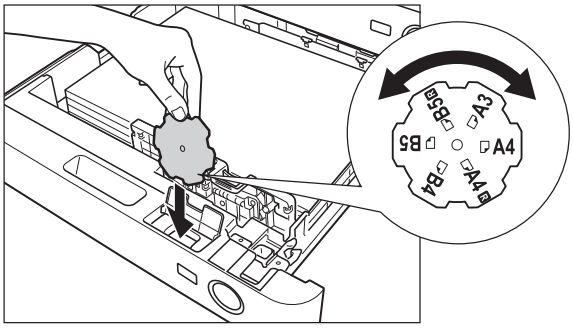

NOTE

Some paper sizes listed on the paper size plate may not be used depending on the models and settings.

6 Gently push the paper drawer back into the machine until it clicks into place in the closed position.

CAUTION

When returning the paper drawer to its original position, be careful not to get your fingers caught, as this may result in personal injury.

Paper Deck Unit-B1 (Optional)

If you attach the Paper Deck Unit-B1 to the machine, you have one additional source of paper for printing jobs. The Paper Deck Unit-B1 holds up to 2,700 sheets of paper (80 g/m^2).

IMPORTANT

If the machine is in the Sleep mode (the touch panel is not displayed, and only the main power indicator is lit), you may not be able to open the paper deck unit. In this case, press the control panel power switch to reactivate the machine, and then press the open button on the paper deck unit.

NOTE

The paper size of the Paper Deck Unit-B1 is fixed to A4.

Loading Paper

If you select the paper deck unit when it has no paper, or if the paper deck unit runs out of paper during a print job, a screen prompting you to load paper appears on the touch panel display.

Follow the procedure below to load paper into the paper deck unit.

CAUTION

When loading paper, take care not to cut your hands on the edges of the paper.

IMPORTANT

The paper deck unit can only accommodate paper from 52 to 163g/m2 in weight. Use the multi-purpose tray to load paper that is heavier.

NOTE

If a message prompting you to load paper appears during printing, the remaining prints are automatically made after you load the correct paper. If you select another drawer, the remaining prints are made after you press [OK].

1 **Press the open button to open the paper deck unit.**

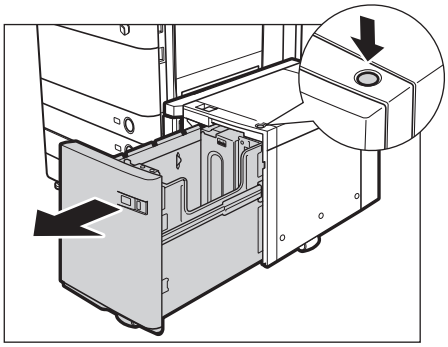

The inside lifter automatically descends to the paper loading position.

2 Open a package of paper, and remove the paper stack.

CAUTION

When loading paper, take care not to cut your hands on the edges of the paper.

IMPORTANT

- Rewrap any remaining paper in its original package, and store it in a dry place, away from direct sunlight.
- Do not load the following types of paper into the paper deck unit. Doing so may cause a paper jam.
  - Severely curled or wrinkled paper
  - Thin straw paper
  - Transparencies
  - Paper which has been printed on using a thermal transfer printer (Do not print on the reverse side of this paper either.)

NOTE

- For high-quality printouts, use paper recommended by Canon.
- Before loading paper, always fan the sheets several times, and align the edges to facilitate feeding.

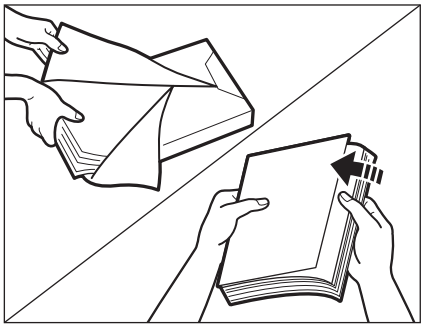

3 Load the paper stack into the paper deck.

Make sure that the inside lifter has lowered before loading paper, and even out the edges of the paper stack.

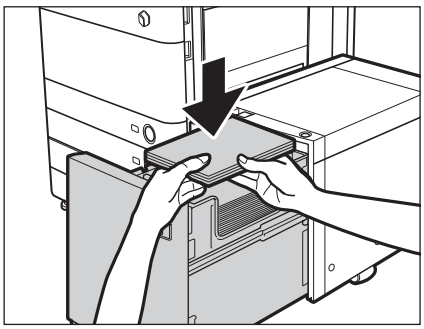

IMPORTANT

- Paper which has been rolled or curled must be straightened out before loading it into the paper deck unit.
- Make sure that the height of the paper stack does not exceed the loading limit mark ( ) on the inside of the paper deck unit.

NOTE

- The paper deck unit holds approximately 2,700 sheets of paper (80 g/m^2).
- Load the paper stack in stages, adding approximately 500 sheets of paper (80 g/m^2) at a time. If the paper deck unit can accommodate more paper, the lifter will descend.
- Only load A4 paper into the paper deck unit. Paper cannot be loaded horizontally.
- If there are instructions on the package of paper about which side of the paper to load, follow those instructions.
- When paper is loaded in the paper deck unit, the side facing down is the one printed on.
- If problems occur, such as poor print quality or paper jams, try turning the paper stack over, and reload it.
- For more information on the print direction of preprinted paper (paper which has logos or patterns already printed on it), see Chapter 17, "Appendix," in *Getting Started*.

4 Close the paper deck unit.

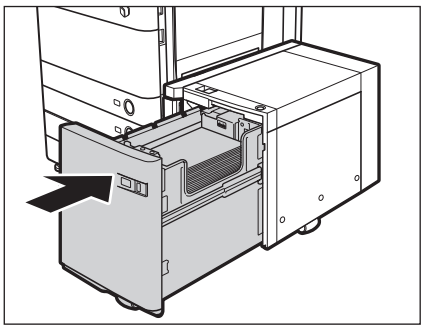

The inside lifter automatically rises, and the machine becomes ready for printing.

CAUTION

When closing the paper deck unit, be careful not to get your fingers caught, as this may result in personal injury.

Tab Feeding Attachment Kit-B1 (Optional)

This section describes how to load Tab Paper.

You can load the tab paper in the Paper Drawer 2.

IMPORTANT

A4 Tab Paper can be used.

NOTE

When you load tab paper, make sure to register the paper type. (See e-Manual > Settings/Registration.)

How to Load Tab Paper

Load the tab paper, as shown below.

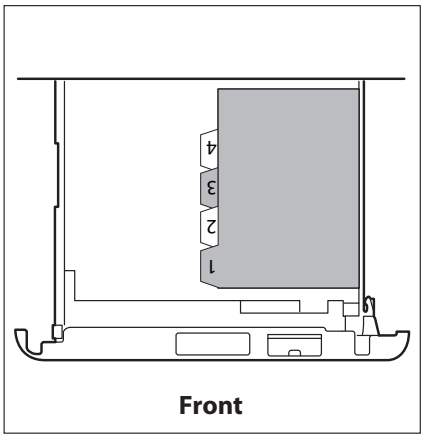

Paper Drawer 2 (Face up)

NOTE

If you want to insert printed tab paper as a chapter page, insert a blank paper where the tab paper will be inserted.

Loading Tab Paper into the Paper Drawer

1 **Press and release the button on Paper Drawer 2.**

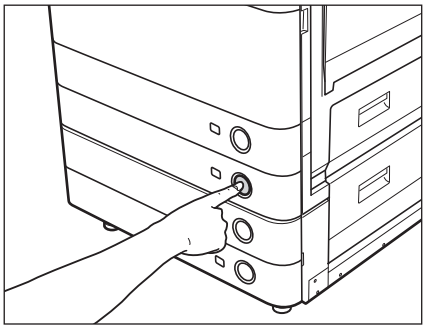

2 **Grip the handle, and pull out the paper drawer until it stops.**

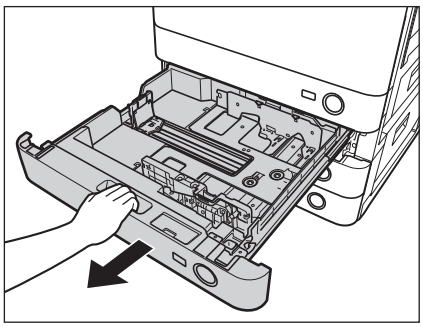

3 **Place the Tab Feeding Attachment Kit-B1 into the holes of the paper drawer, and push it in as far as possible.**

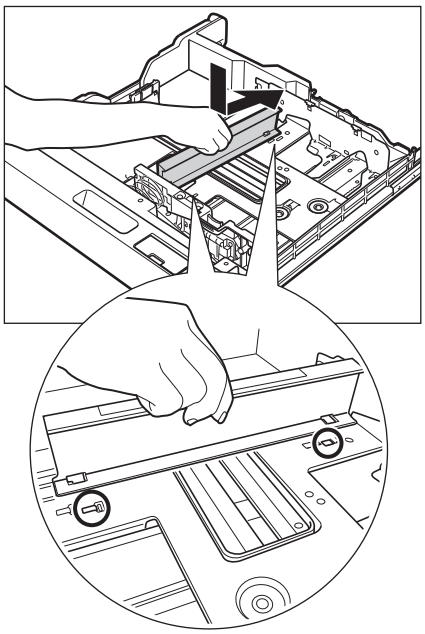

4 **Load the tab paper into the paper drawer.**

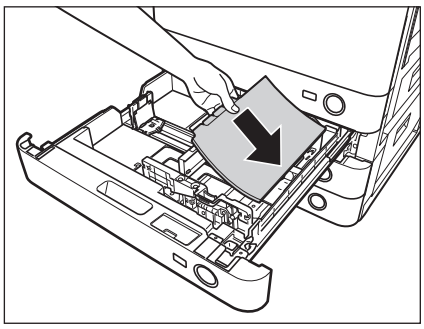

IMPORTANT

- Paper which has been rolled or curled must be straightened out prior to use.
- Make sure that the height of the paper stack does not exceed the limit mark ( ) at the back of the paper drawer.

5 **Squeeze the lever on the front guide, as shown in the illustration. While squeezing the lever, slide the front guide until it fits the tab paper.**

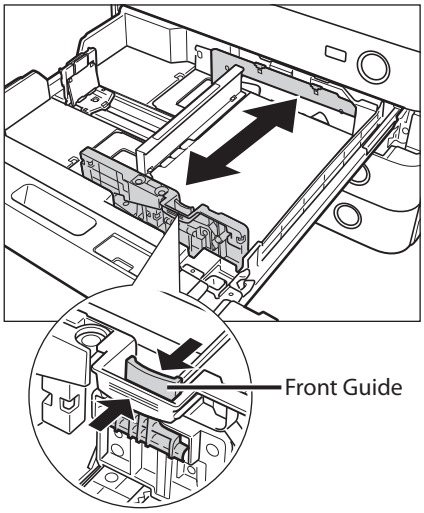

6 **Gently push the paper drawer back into the machine until it clicks into place in the closed position.**

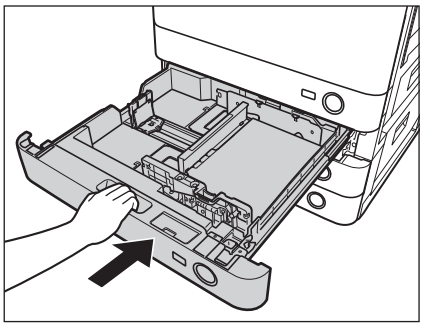

CAUTION

When returning the paper drawer to its original position, be careful not to get your fingers caught, as this may result in personal injury.

IMPORTANT

- Never place paper or any other items in the open part of the paper drawer next to the paper stack. Doing so may cause a paper jam.
- When you are not loading tab paper, make sure to remove the Tab Feeding Attachment Kit-B1 from the paper drawer. Using the Tab Feeding Attachment Kit-B1 for storing paper other than tab paper may cause a paper jam.

NOTE

When you load tab paper, make sure to register the paper type. (See e-Manual > Settings/Registration.)

Envelope Feeder Attachment-D1 (Optional)

This section explains how to use the Envelope Feeder Attachment-D1.

IMPORTANT

The Envelope Feeder Attachment-D1 can only be attached to Paper Drawer 2.

How to Use the Envelope Feeder Attachment

The following five types of envelopes can be loaded into the envelope feeder attachment: COM10 No.10, Monarch, DL, ISO-B5, and ISO-C5.

The setting of the machine and guide size is set to COM10 No. 10 as the default setting.

IMPORTANT

- When you attach the envelope feeder attachment to the paper drawer, do not forcefully move the front guide of the paper drawer in the wrong direction. Doing so may detach the envelope feeder attachment from the paper drawer.
- Do not print on both sides of an envelope. Doing so may cause paper jams, dirty prints, or make the inside of the machine dirty.
- Do not load the following types of envelopes inside the envelope cassette. Doing so may cause paper jams, dirty prints, or make the inside of the machine dirty.
  - Curled, creased, or folded envelopes
  - Very thick or thin envelopes
  - Damp or wet envelopes
  - Torn envelopes
  - Irregularly shaped envelopes
  - Envelopes with clasps or windows
  - Envelopes that have already been sealed
  - Envelopes with holes or perforations
  - Envelopes with specially coated surfaces
  - Envelopes made of surface treated coloured paper
  - Envelopes that are self-sticking, which use ink, glue, or other substances that can melt, burn, vaporize, or emit smells under the heat of a fixing unit (approximately 200 °C). Depending on the materials used for the seal, the glue may melt under the fixing unit's heat, sealing the envelopes.
- When the envelope cassette is attached and envelope is selected for the paper type, it outputs to the tray located under the scanner unit.
- If you are printing on envelopes, empty the output tray when up to 10 printed envelopes accumulate in the tray.
- Envelopes should be stored in a place away from high-temperatures and humidity.
- If there is a temperature difference between the location where the envelopes were stored and the location where the envelopes are being printed, leave the envelopes in the printing location at room temperature before you use them.
- Correctly match the paper size dial, size switch, and [Register Envelope Drawer] in [Preferences] (Settings/Registration) with the size of the envelopes being loaded. Failure to do so may cause paper jams, dirty prints, or make the inside of the machine dirty.
- If you want to adjust the width guides to load ISO-C5 or ISO-B5 envelopes, contact your local authorized Canon dealer.

NOTE

- For more information on envelope types that can be loaded in the envelope feeder attachment, see e-Manual > Basic Operations.
- Sizes of the envelopes are as follows:
  - COM10 No.10: 104.7 mm x 241.3 mm
  - Monarch: 98.4 mm x 190.5 mm
  - DL: 110 mm x 220 mm
  - ISO-B5: 176 mm x 250 mm
  - ISO-C5: 162 mm x 229 mm

Preparing the Envelopes

This section explains how to prepare the envelopes before loading them into the paper drawer.

IMPORTANT

Using curled, creased, or folded envelopes may cause paper jams. Load envelopes after following the procedure below.

1 Take five envelopes, loosen them as shown, and stack them together.

Repeat this step five times for each set of five envelopes.

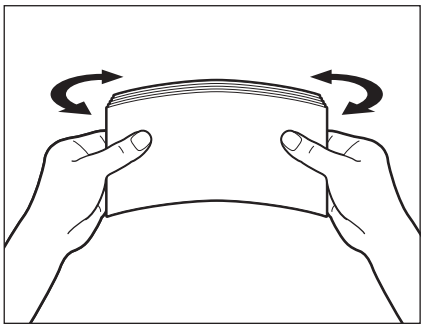

2 Place the envelopes on a clean, level surface, and press all the way around the envelopes by hand, in the direction of the arrows, to remove any curls.

Repeat this step five times for each set of five envelopes.

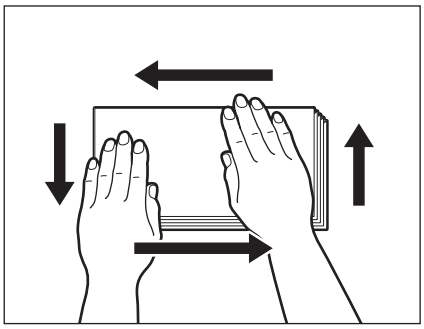

Hold down the four corners of the envelopes firmly, so that they and the sealed or glued portion stay flat.

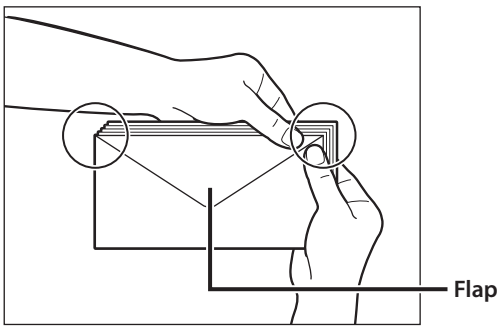

IMPORTANT

- If you use envelopes that have glue attached to their flaps, the glue may melt due to the heat and pressure of the fixing unit.
- Take particular care to spread the envelopes out in the direction that they will be fed.

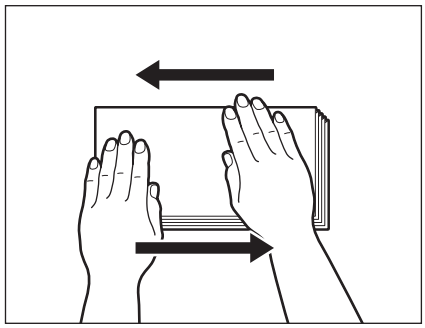

- Do not print on the back side of the envelopes (the side with the flap).
- If the envelopes become filled with air, flatten them by hand before loading them into the envelope feeder attachment.

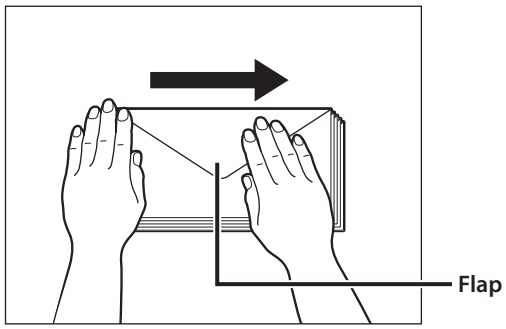

Loading Envelopes

This section explains how to load envelopes into Paper Drawer 2.

1 **Press and release the button on Paper Drawer 2.**

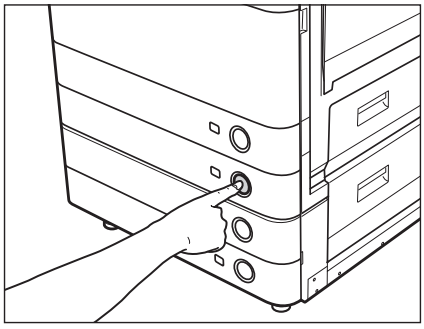

2 **Grip the handle, and pull out the paper drawer until it stops.**

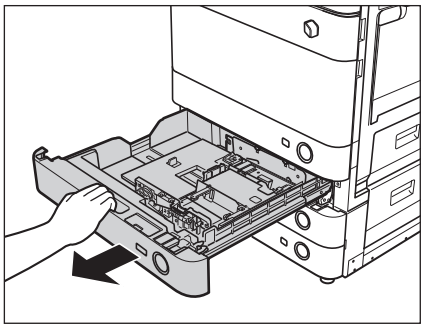

3 Move the left guide as far as it can go.

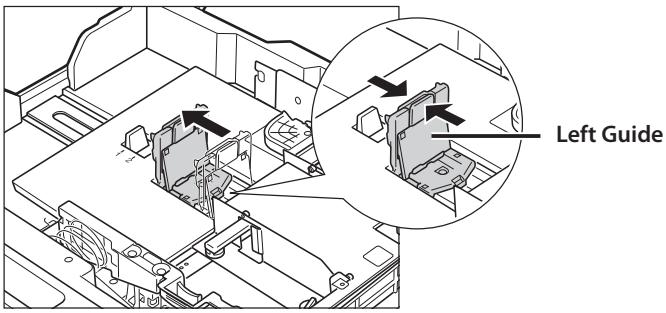

4 Load 10 envelopes at a time with the side you want to print on facing up. While loading the envelopes, press down on the left side of the receptacle to lock them into place.

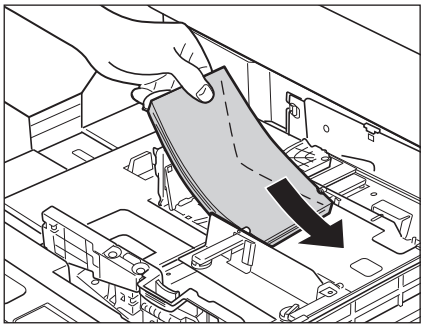

Load the envelopes, as shown below.

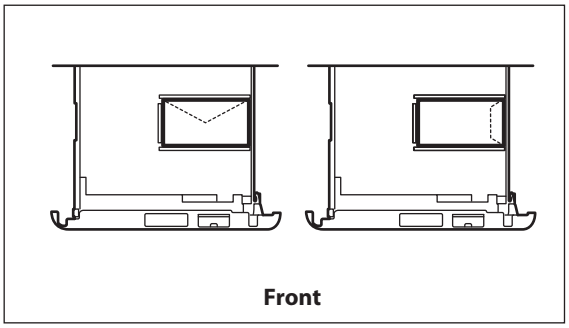

Align the leading edges of the envelopes, and make sure that they are held in place under the claw.

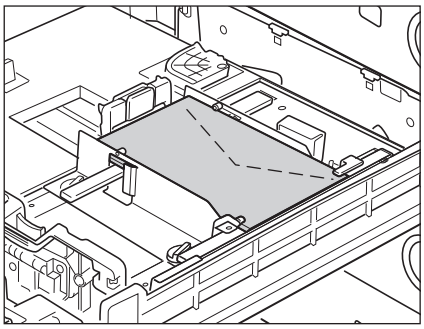

IMPORTANT

- Envelopes which have been rolled or curled must be straightened out prior to use.
- Make sure that the height of the envelope stack does not fall below the height limit mark ( ).
- The maximum height (quantity) of envelopes that can be loaded into the cassette is approximately 30 mm.
- The maximum height (quantity) of envelopes varies according to the envelope type and user operating conditions; but, as a reference, 30 mm is approximately 50 envelopes.

5 Slide the left guide to align it with the envelopes.

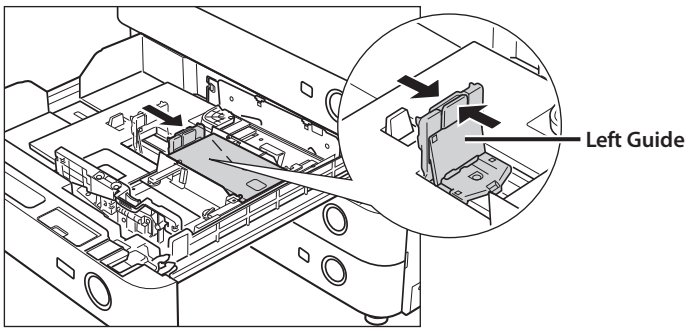

6 Gently push the paper drawer back into the machine until it clicks into place in the closed position.

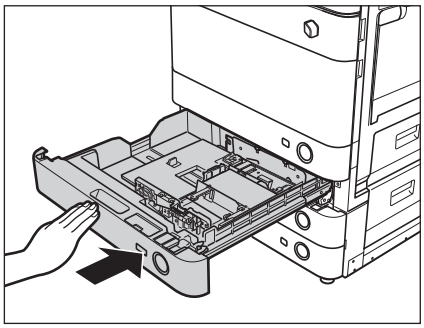

CAUTION

When returning the paper drawer to its original position, be careful not to get your fingers caught, as this may result in personal injury.

IMPORTANT

Never place paper or any other items in the empty part of the paper drawer next to the envelopes. Doing so may cause paper jams.

NOTE

If output has been stopped due to an insufficient number of envelopes, load more envelopes, and follow the instructions on the touch panel display. Printing resumes.

Loading the Envelope after Specifying the Size

This section explains how to load the envelopes that where specified in Settings/Registration into the envelope cassette.

IMPORTANT

Make sure that you change the envelope settings from the Settings/Registration screen before carrying out the following procedure. (See e-Manual > Settings/Registration.) Otherwise, the machine may not recognize the changes you have made.

1 **Press and release the button on Paper Drawer 2.**

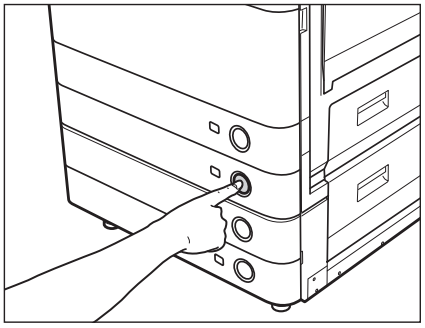

2 **Grip the handle, and pull out the paper drawer until it stops.**

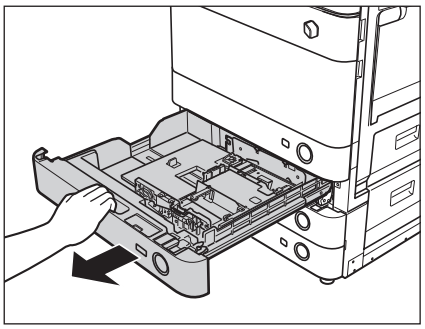

3 **Pull and lift the paper drawer out of the machine by holding its left and right sides with both hands.**

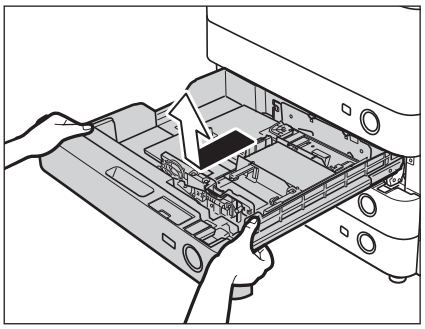

4 **Remove the envelopes that are loaded in the paper drawer (several envelopes at a time).**

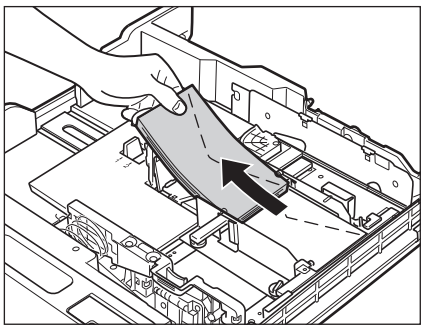

5 **Slide the left guide to align it with the mark for the desired paper size.**

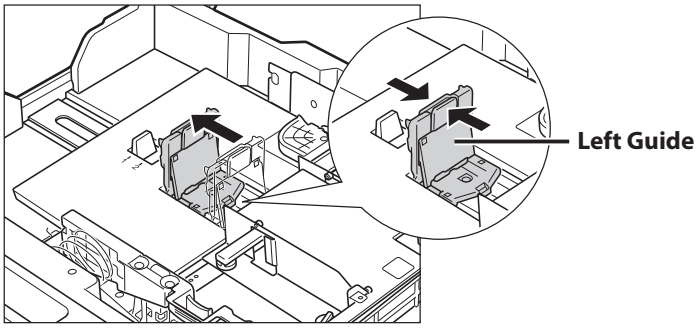

6 **Loosen the two screws fixing the front width guide of the envelope feeder attachment.**

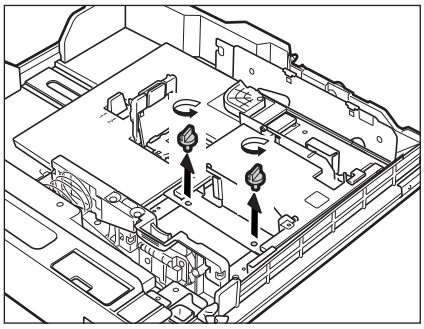

7 **Press down on the envelope receptacle, and move the front width guide to align it with the mark of the desired envelope size.**

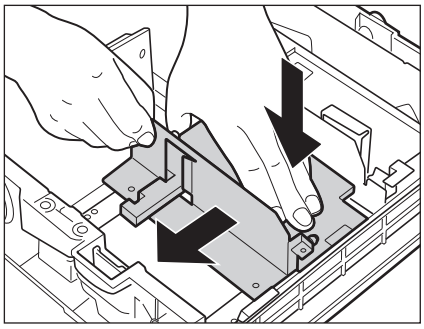

8 **Fix the front width guide in place with the screws.**

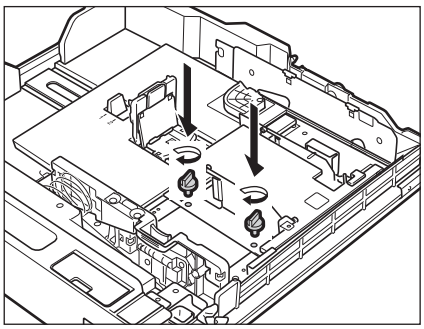

9 **Move the back width guide of the envelope feeder attachment in accordance with steps 6 to 8.**

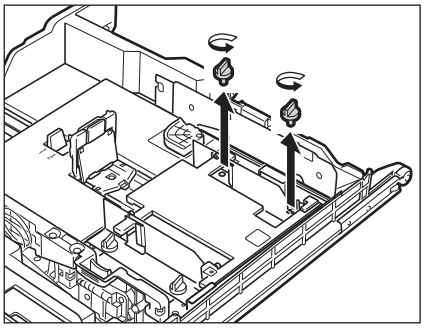

10 **Load 10 envelopes at a time with the side you want to print on facing up. While loading the envelopes, press down on the left side of the receptacle to lock them into place.**

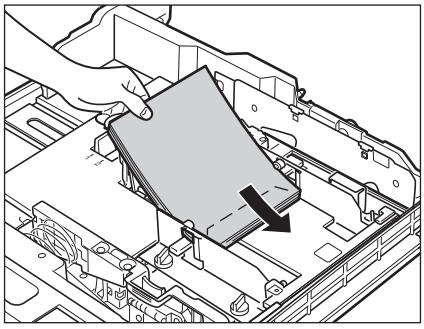

Load the envelopes, as shown below.

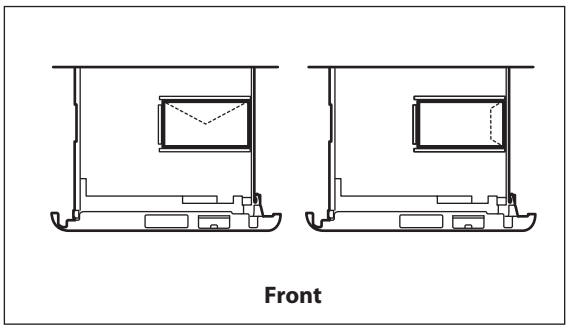

Align the leading edges of the envelopes, and make sure that they are held in place under the claw.

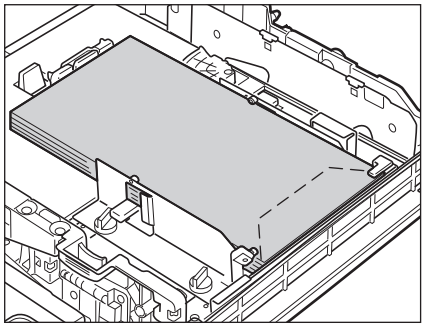

IMPORTANT

- Envelopes which have been rolled or curled must be straightened out prior to use.
- Make sure that the height of the envelope stack does not fall below the height limit mark ( ).
- The maximum height (quantity) of envelopes that can be loaded into the cassette is approximately 30 mm.
- The maximum height (quantity) of envelopes varies according to the envelope type and user operating conditions, but, as a reference, 30 mm is approximately 50 envelopes.

11 Select whether to use the envelope you set as 'ENV.1' or 'ENV.2'.

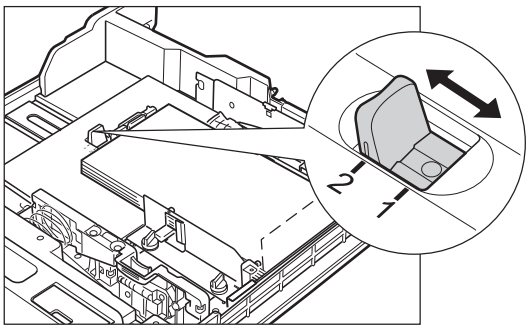

● If you want to use the envelope you set as 'ENV.1':

☐ Turn the paper size dial to '1'.

Doing so enables the envelope size and type stored in ENV.1 in Register Envelope Drawer in Settings/Registration to be loaded.

● If you want to use the envelope you set as 'ENV.2':

☐ Turn the paper size dial to '2'.

Doing so enables the envelope size and type stored in ENV.2 in Register Envelope Drawer in Settings/Registration to be loaded.

12 **Gently push the paper drawer back into the machine until it clicks into place in the closed position.**

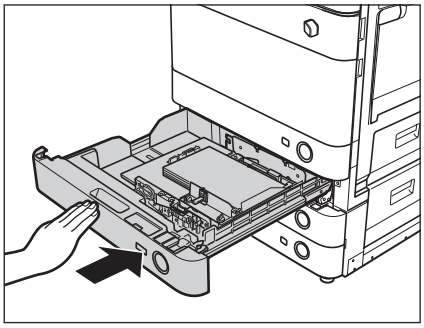

CAUTION

When returning the paper drawer to its original position, be careful not to get your fingers caught, as this may result in personal injury.

IMPORTANT

Never place paper or any other items in the empty part of the paper drawer next to the envelopes. Doing so may cause paper jams.

NOTE

If output has been stopped due to an insufficient number of envelopes, load more envelopes, and follow the instructions on the touch panel display. Printing resumes.

Feeder (Replacing the Stamp Cartridge)

Replace the stamp cartridge when the stamp mark is faint or no longer visible.

IMPORTANT

When replacing the stamp cartridge, take care not to allow ink to come into contact with your hands or clothing. If ink gets onto your hands or clothing, wash it off immediately with cold water.

Replacing the Stamp Cartridge (Duplex Color Image Reader Unit-B1)

1 **Open the feeder.**

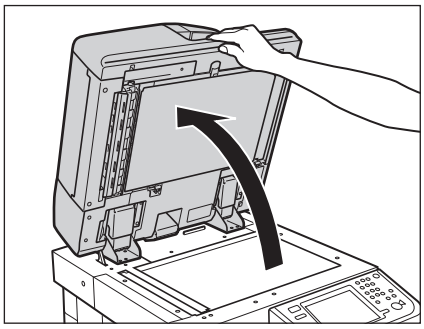

2 **Pull the lever above the feeder, and open the document scan cover.**

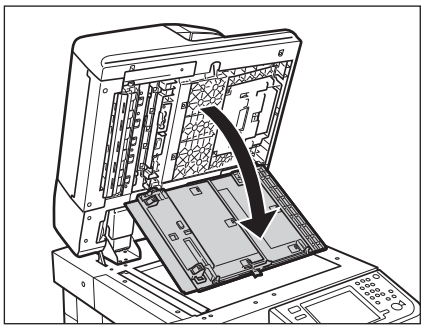

CAUTION

Open the document scan cover carefully, as not to scratch the platen glass.

3 **Open the stamp cover.**

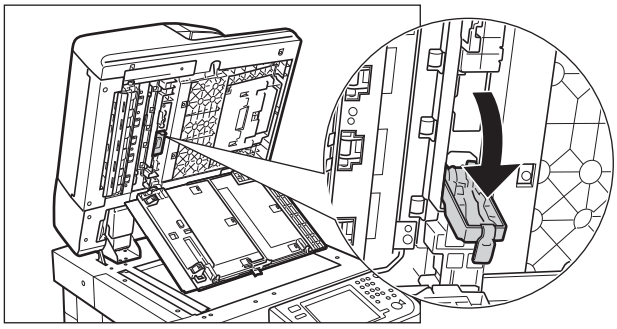

4 Remove the old stamp cartridge, using tweezers.

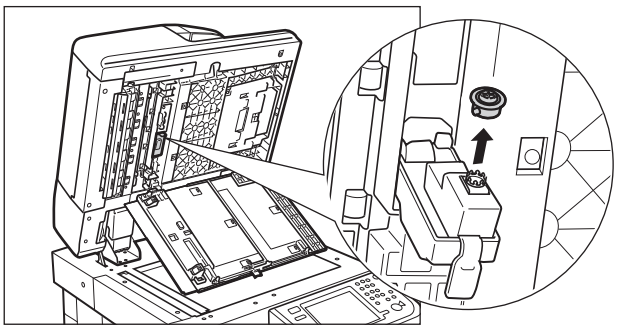

5 Push in the new stamp cartridge until it clicks, using tweezers.

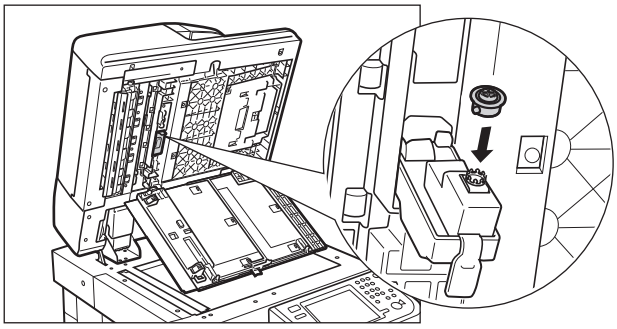

IMPORTANT

- Insert the stamp cartridge so that it is not slanted.
- Insert the stamp cartridge properly, or paper jams may occur.

6 Close the stamp cover.

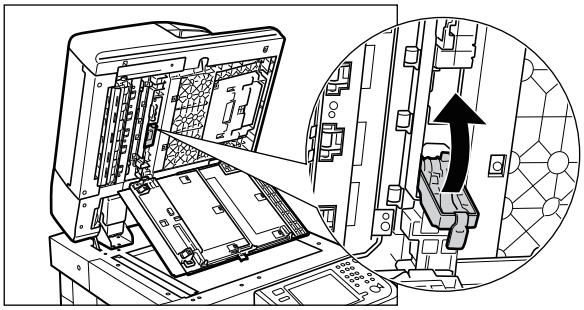

CAUTION

When closing the covers, be careful not to get your fingers caught, as this may result in personal injury.

7 Close the cover of the document scanning area until it clicks.

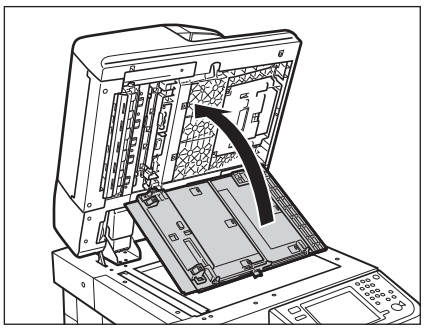

CAUTION

When closing the covers, be careful not to get your fingers caught, as this may result in personal injury.

8 Close the feeder.

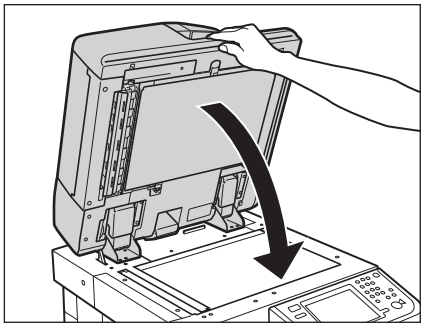

CAUTION

- **When closing the feeder, be careful not to get your fingers caught, as this may result in personal injury.**
- **Be aware that the light emitted from the platen glass may be very bright when closing the feeder.**

Replacing the Stamp Cartridge (Color Image Reader Unit-B1)

1 **Open the feeder cover, and then open the inner cover.**

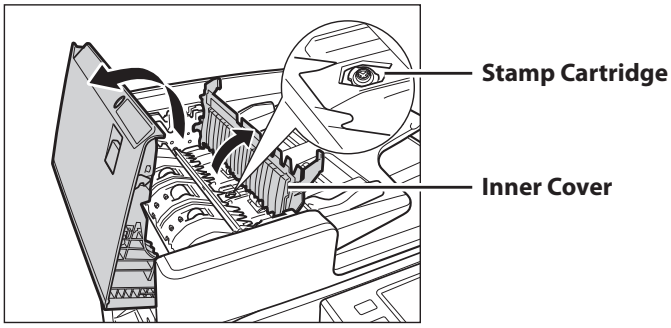

2 **Remove the old stamp cartridge, using tweezers.**

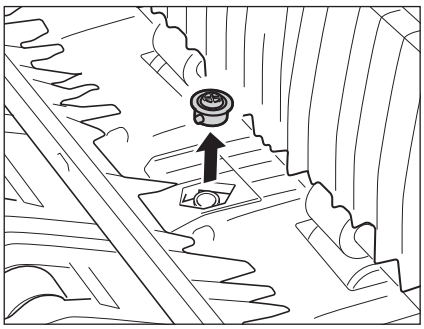

3 **Push in the new stamp cartridge until it clicks, using tweezers.**

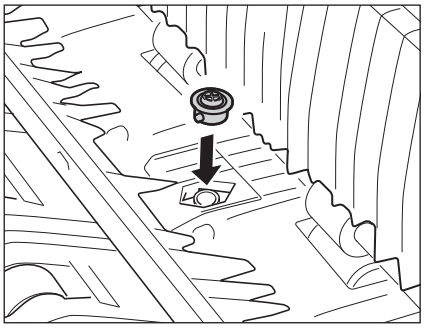

IMPORTANT

- Make sure that the stamp cartridge is not protruding from the surface.
- Insert the stamp cartridge properly, or paper jams may occur.

4 Gently close the inner cover, and then close the feeder cover.

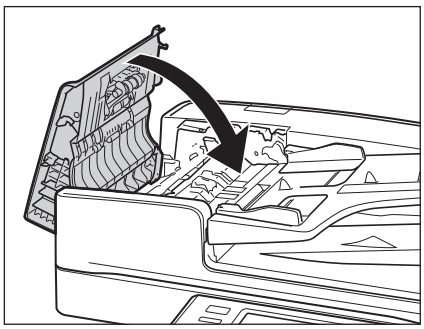

CAUTION

When closing the covers, be careful not to get your fingers caught, as this may result in personal injury.

Inner Finisher-A1 (Optional)

This section describes the procedure for replacing the staple cartridge in the Inner Finisher-A1.

Replacing the Staple Cartridge

When the Inner Finisher-A1 is almost out of staples and the staple cartridge must be replaced a screen prompting you to replace the staple cartridge appears on the touch panel display. Follow the procedure described below to replace the staple cartridge.

Use only staple cartridges intended for use with this machine.

NOTE

We recommend that you order staple cartridges from your local authorized Canon dealer before your stock runs out.

1 **Open the front cover of the finisher.**

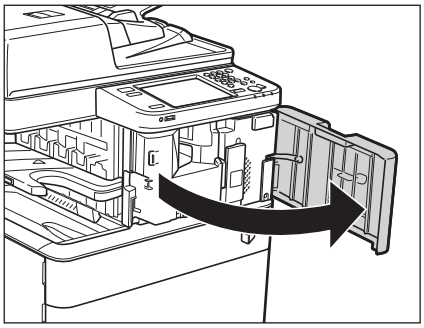

2 **Pull out the staple case, holding it by the green tab.**

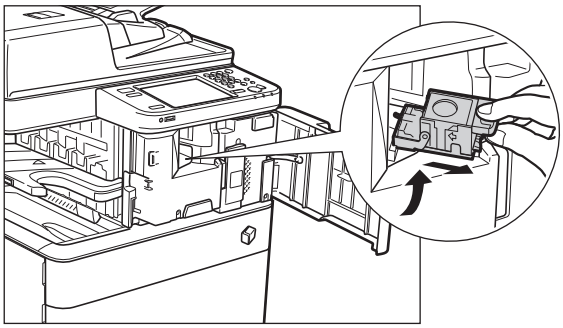

3 **Press the area indicated by PUSH, and then lift up the staple cartridge.**

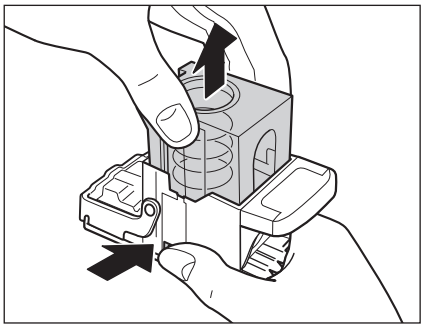

4 Pull out the staple cartridge.

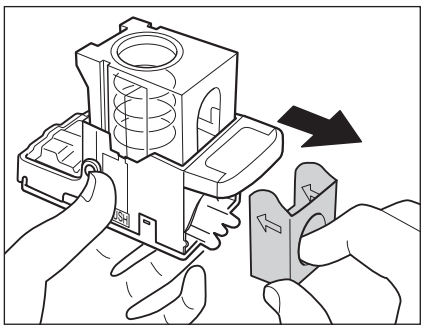

5 Insert the new staple cartridge.

Press the spring-loaded case down until it clicks into place.

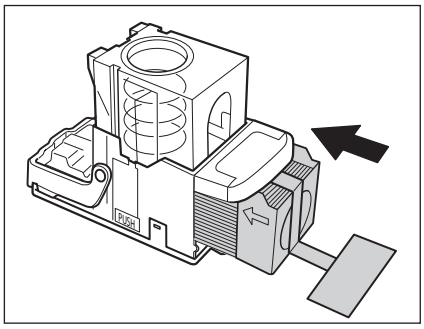

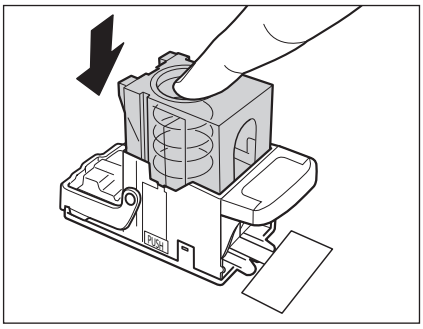

IMPORTANT

- Use only staple cartridges intended for use with this machine.
- Do not remove the seal that holds the staples together before you place the staple cartridge into the staple case.

NOTE

Only one staple cartridge can be inserted at a time.

6 Remove the seal holding the staples together, by pulling it straight out.

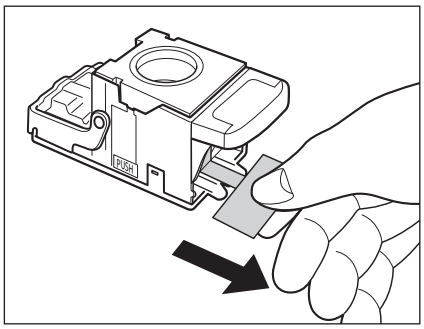

IMPORTANT

If you pull it out at an angle, it may tear. Make sure that you pull the seal straight out.

7 Gently push the staple case into the finisher until it is securely in place.

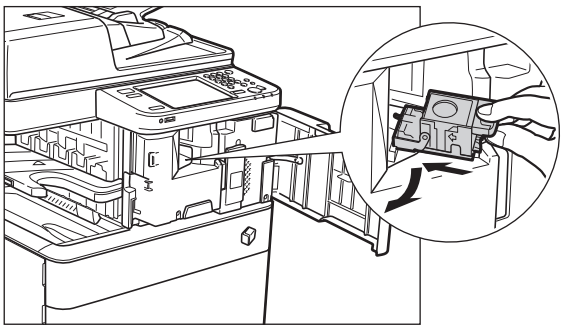

8 Close the front cover of the finisher.

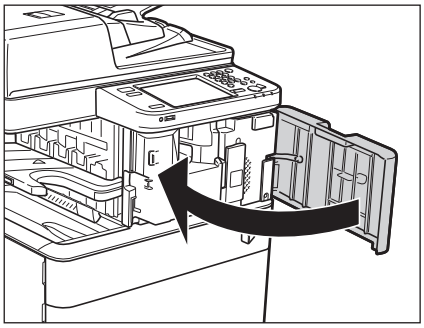

CAUTION

When closing the front cover of the finisher, be careful not to get your fingers caught, as this may result in personal injury.

NOTE

After the cover is closed, the stapler unit may automatically perform a "dry" stapling operation to reposition the staples.

Staple Finisher-C1/Booklet Finisher-C1/Puncher (Optional)

This section describes the procedure for replacing the staple cartridge in the Staple Finisher-C1 or Booklet Finisher-C1, and how to remove the punch waste from the Puncher.

Replacing the Staple Cartridge in the Stapler Unit

When the Staple Finisher-C1 or Booklet Finisher-C1 is almost out of staples, and the staple cartridge in the stapler unit must be replaced, a screen prompting you to replace the staple cartridge appears on the touch panel display. Follow the procedure described below to replace the staple cartridge.

Use only staple cartridges intended for use with this machine.

NOTE

We recommend that you order staple cartridges from your local authorized Canon dealer before your stock runs out.

1 **Open the front cover of the finisher.**

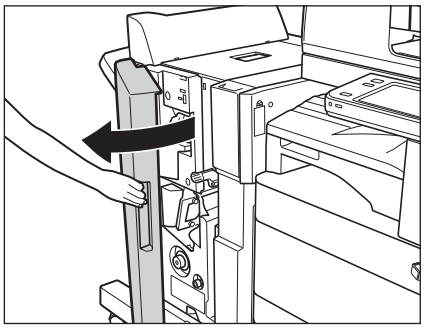

Booklet Finisher-C1

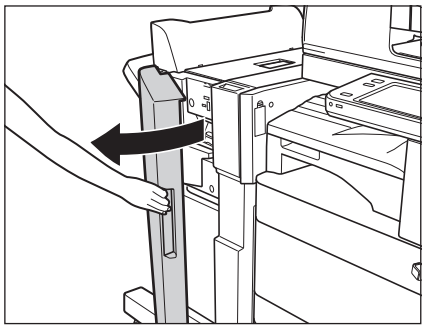

Staple Finisher-C1

2 **Pull out the staple case, holding it by the green tab.**

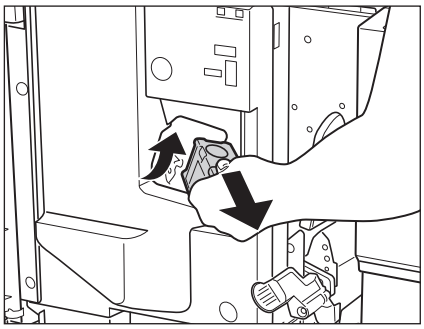

3 **Press the area indicated by PUSH, and then lift up the staple cartridge.**

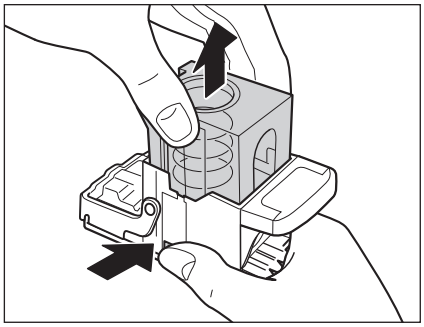

4 Pull out the staple cartridge.

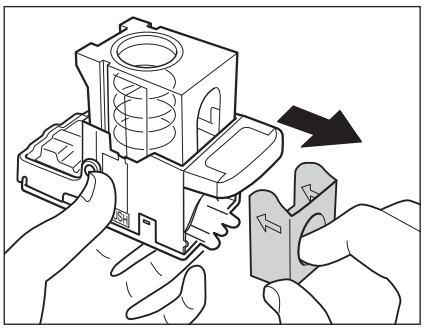

5 Insert the new staple cartridge.

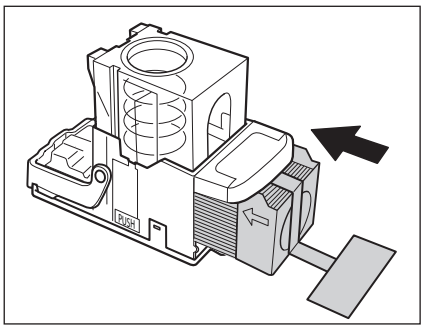

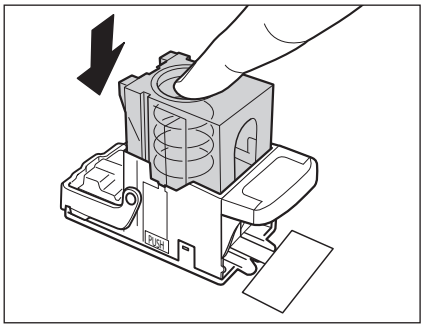

Press the spring-loaded case down until it clicks into place.

IMPORTANT

- Use only staple cartridges intended for use with this machine.
- Do not remove the seal that holds the staples together before you place the staple cartridge into the staple case.

NOTE

Only one staple cartridge can be inserted at a time.

6 Remove the seal holding the staples together, by pulling it straight out.

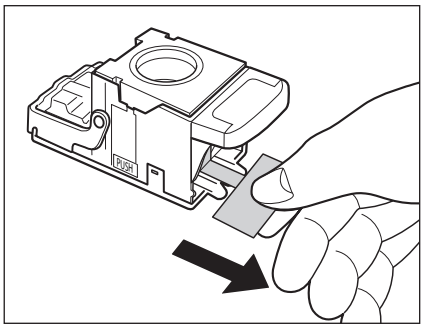

IMPORTANT

If you pull it out at an angle, it may tear. Make sure that you pull the seal straight out.

7 Gently push the staple case into the stapler unit, until it is securely in place.

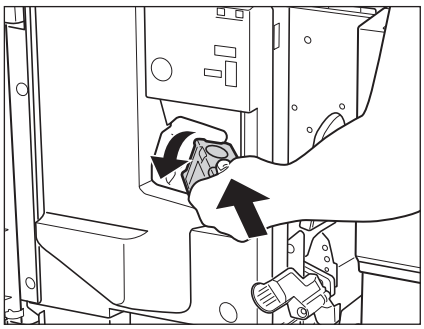

8 Close the front cover of the finisher.

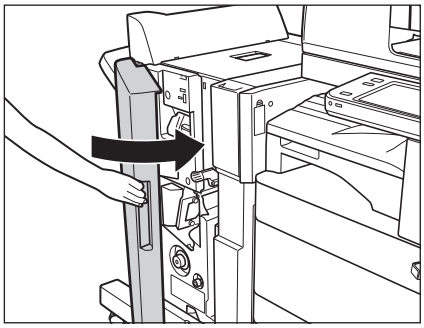

Booklet Finisher-C1

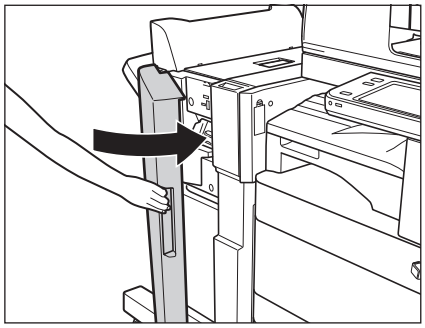

Staple Finisher-C1

CAUTION

When closing the front cover of the finisher, be careful not to get your fingers caught, as this may result in personal injury.

NOTE

After the cover is closed, the stapler unit may automatically perform a "dry" stapling operation to reposition the staples.

Replacing the Staple Cartridge in the Saddle Stitcher Unit

When the saddle stitcher unit of the Booklet Finisher-C1 is almost out of staples, and the staple cartridge must be replaced, a screen prompting you to replace the staple cartridge appears on the touch panel display. Follow the procedure described below to replace the staple cartridge.

Use only staple cartridges intended for use with this machine.

IMPORTANT

If necessary, remove all of the output paper in the Booklet Tray before replacing the staple cartridge in the saddle stitcher unit.

NOTE

- This procedure is necessary only if the Booklet Finisher-C1 is attached.
- We recommend that you order staple cartridges from your local authorized Canon dealer before your stock runs out.
- Remove the black part on the end before inserting the staple cartridge.

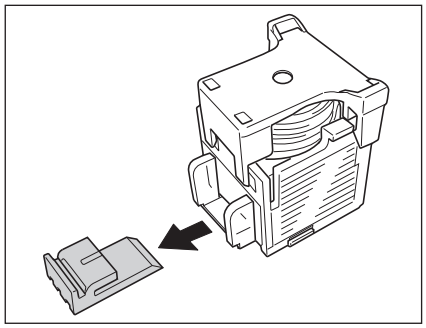

1 **Open the front cover of the finisher.**

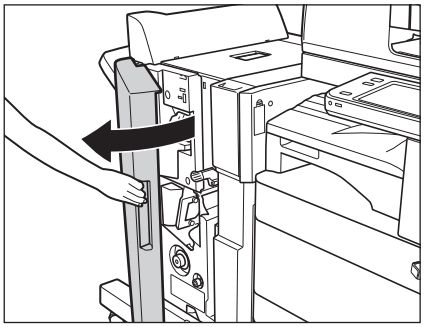

2 **Grip the saddle stitcher unit by its handle, and pull it out of the finisher until it stops.**

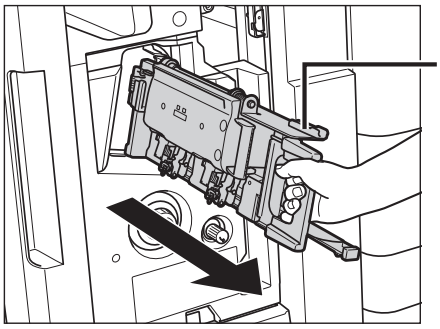

3 Pull the stapler unit of the saddle stitcher unit towards you, and then push it up.

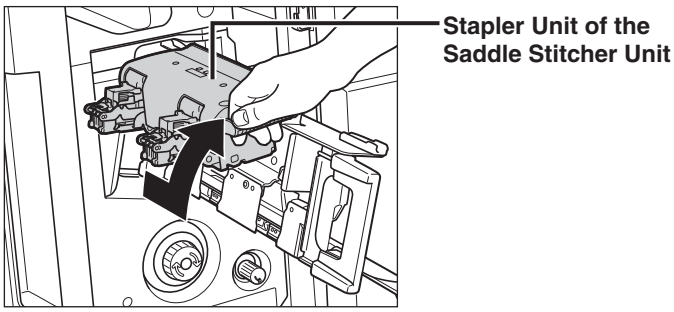

4 Pull out the empty staple cartridge, holding it by its left and right sides.

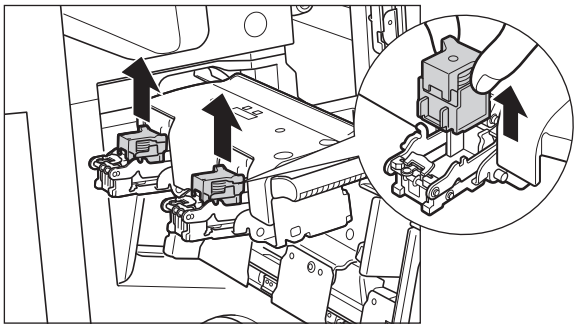

5 Insert the new staple cartridge.

Push the staple cartridge in until it clicks into place.

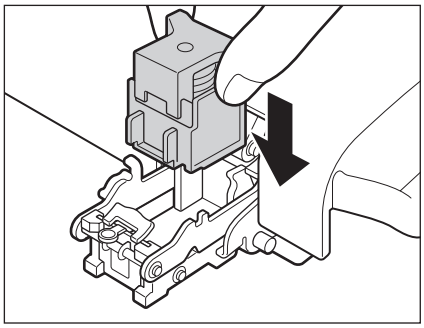

NOTE

- When replacing the staple cartridge, replace both the front and back staple cartridge.
- Only one staple cartridge can be inserted at a time.

6 **Pull the stapler unit of the saddle stitcher unit towards you, and then push it down into its original position.**

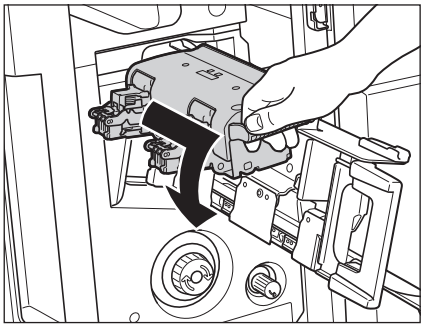

7 **Gently push the saddle stitcher unit back into its original position.**

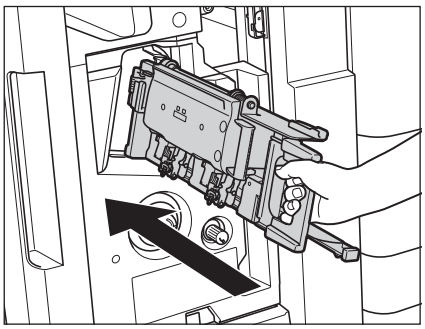

8 **Close the front cover of the finisher.**

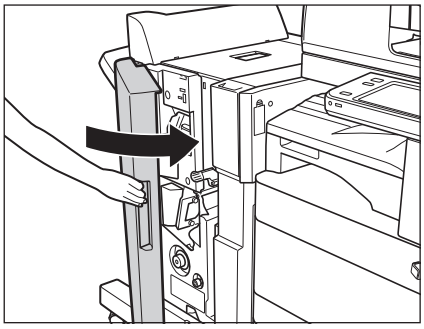

CAUTION

When closing the front cover of the finisher, be careful not to get your fingers caught, as this may result in personal injury.

IMPORTANT

When you have replaced the staple cartridge, be sure to manually reposition the staples in the saddle stitcher unit. (See e-Manual > Settings/Registration.)

Removing Punch Waste

When the punch waste tray of the Puncher becomes full, a screen prompting you to remove the punch waste appears on the touch panel display. Follow the procedure described below to remove the punch waste.

NOTE

This procedure is necessary only if the Puncher is attached.

1 **Open the front cover of the punch waste tray.**

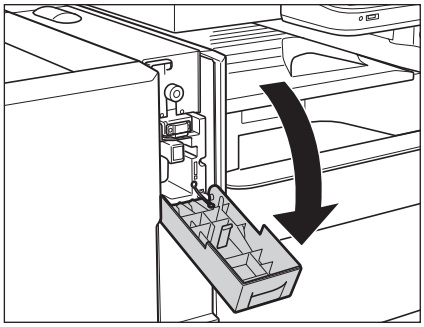

2 **Pull out the punch waste tray.**

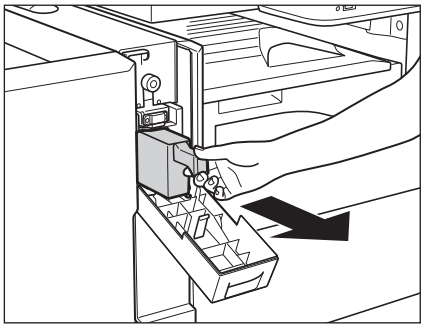

3 **Discard the punch waste.**

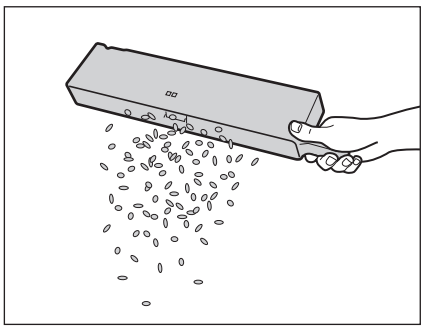

NOTE

Make sure that the punch waste tray is completely emptied.

4 Return the punch waste tray to its original position.

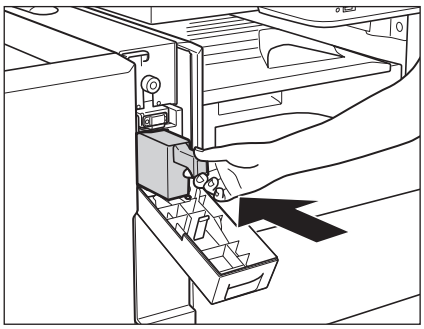

NOTE

If the punch waste tray is not securely in place, you cannot make prints in the Hole Punch mode.

5 Close the front cover of the punch waste tray.

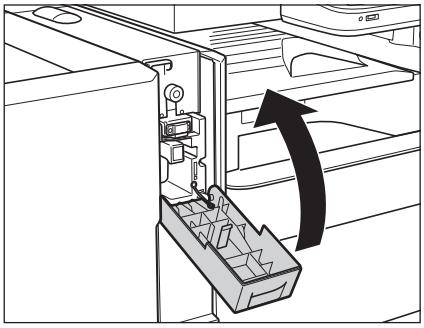

CAUTION

When closing the front cover of the punch waste tray, be careful not to get your fingers caught, as this may result in personal injury.

Replacing the Toner Cartridge

When there is only a small amount of toner remaining inside the machine, the message <Black toner is low. Replacement not yet needed.> appears on the touch panel display. You can continue printing, but at this time you should purchase a new toner cartridge of the indicated color, to have it available when needed.

When the message <Replace toner cartridge. (black)> is displayed on the touch panel display, press [ ] on the bottom right and replace the toner cartridge for the displayed colour.

When the Black toner or all of the toners run out completely and prints can no longer be made, a screen with instructions on how to replace the toner cartridge appears on the touch panel display. Follow the procedure described below to replace the toner cartridge.

If you press [Close], you can continue operations, such as setting modes and scanning originals, even if you do not replace the toner cartridge immediately.

WARNING

Do not burn or throw used toner cartridges into open flames, as this may cause the toner remaining inside the cartridges to ignite, resulting in burns or a fire.

CAUTION

- **Keep toner out of the reach of small children. If toner is ingested, consult a physician immediately.**
- **Take care not to allow toner to come into contact with your hands or clothing. If toner gets onto your hands or clothing, wash it off immediately with cold water. Washing it off with warm water will set the toner, and make it impossible to remove the toner stains.**

IMPORTANT

- Use only toner cartridges intended for use with this machine.
- Do not replace toner cartridges until the message prompting you to do so appears.
- You can replace a toner cartridge while the machine is printing.
- The colour of the toner to be replaced is displayed on the touch panel display. If multiple toner cartridges must be replaced, replace the toner cartridges in the following order: Black, Yellow, Magenta, Cyan.
- If you continue copying or printing in black-and-white after cyan, magenta, or yellow toner runs out, do not remove the depleted toner cartridges from the machine.
- You can display an error message informing the user that the remaining toner is low. For instructions on displaying the remaining toner error message, see e-Manual > Settings/Registration. For instructions on deleting the remaining toner error message, see e-Manual > Settings/Registration.

NOTE

- When the message <Black toner is low. Replacement not yet needed.> appears, approximately 10% of the toner is left. It is recommended that you get a new toner cartridge ready for replacement before the displayed toner color runs out.
- Complete instructions on how to replace the toner cartridge can be accessed by pressing [Previous] or [Next] on the touch panel display.
- If toner runs out during a print job, the remaining prints are made after you replace the toner cartridge.
- If black toner is left, you can continue copying and printing in black-and-white. However, if a job is interrupted because cyan, magenta, or yellow toner runs out, copying and printing in black-and-white is only possible for functions other than the function being used for the interrupted job.
- After replacing toner cartridges, if printed colours are different from the colours printed before you replaced the toner cartridges, perform an [Auto Adjust Gradation] in [Adjustment/Maintenance] (Settings/Registration). (see e-Manual > Settings/Registration.)

1 **Press [ ].**

NOTE

If the Black toner or all of the toners run out, this step is not necessary.

2 Open the toner replacement cover, holding both sides.

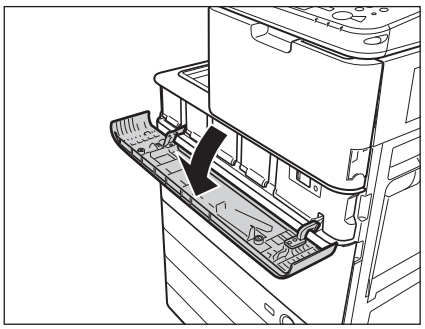

3 Select the colour of the toner you want to replace from the display on the control panel → press [Remove Toner Cartridges].

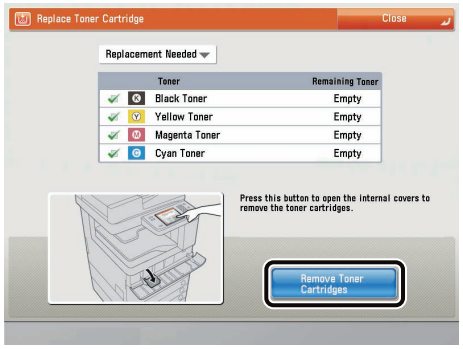

If the toner with content remaining is selected, the message <The selected toner can still be used. Do you want to replace it?> is displayed. If you want to continue replacement, press [Yes]. If you do not want to replace the toner, press [No].

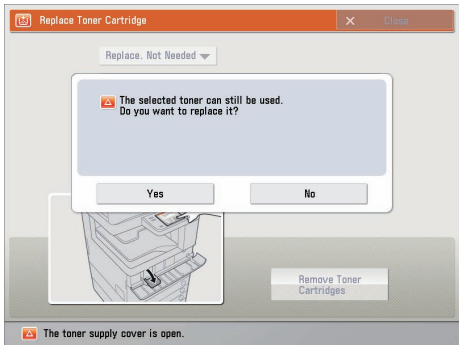

4 Wait for the internal cover to open automatically, and pull the toner cartridge out of the toner supply port.

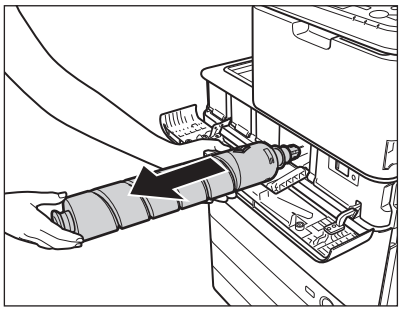

Black Toner Cartridge

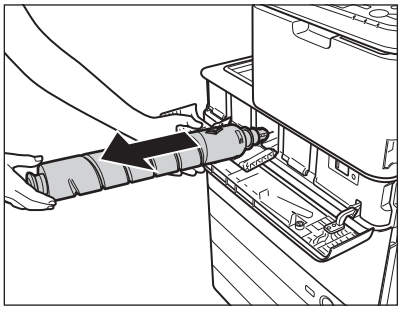

Cyan, Magenta, or Yellow Toner Cartridge

If the internal cover does not automatically open because of reasons such as closing of the toner replacement cover, an error message is displayed. Repeat the procedure from step 1.

WARNING

Do not burn or throw used toner cartridges into open flames, as this may cause the toner remaining inside the cartridges to ignite resulting in burns or a fire.

CAUTION

Do not open the internal cover by force, as doing so may damage the machine.

5 Hold the new toner cartridge in your hands, as shown below, and gently tilt it up and down 10 times.

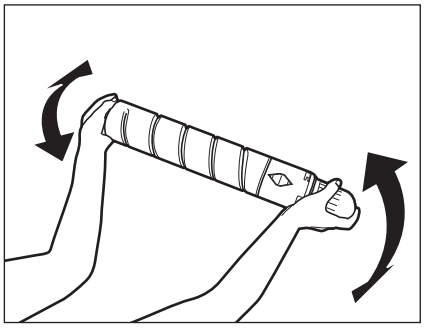

CAUTION

Never touch the tip of the toner cartridge or subject it to shock by hitting it.

6 Twist the protective cap of the new toner cartridge in the direction of the arrow to remove it.

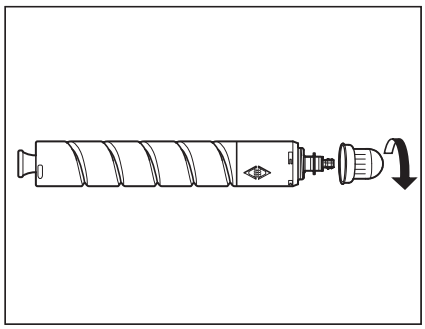

CAUTION

Never not touch the tip of the toner cartridge or subject it to shock by hitting it. Doing so may cause the toner cartridge to leak.

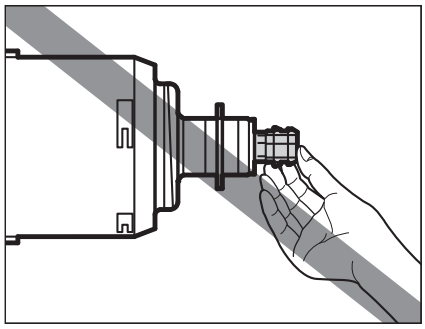

7 Push the new toner cartridge in as far as possible.

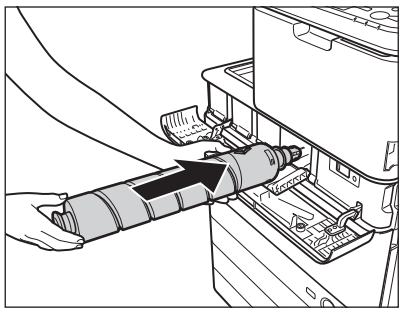

Black Toner Cartridge

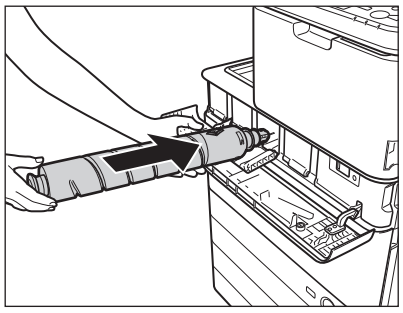

Cyan, Magenta, or Yellow Toner Cartridge

IMPORTANT

When replacing toner cartridges, make sure that the colour of the toner cartridge matches the colour of label on the internal cover.

8 Close the internal cover.

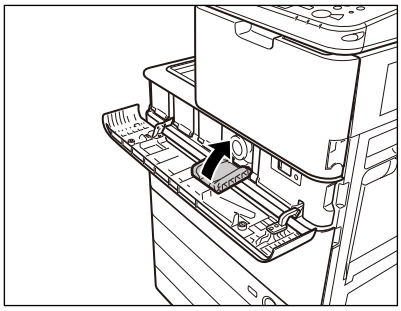

Black Toner Cartridge

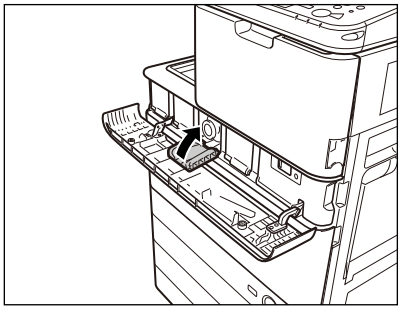

Cyan, Magenta, or Yellow Toner Cartridge

If the toner cartridge is not inserted, you cannot close the internal cover.

CAUTION

When closing the internal cover, be careful not to get your fingers caught, as this may result in personal injury.

9 Close the toner replacement cover.

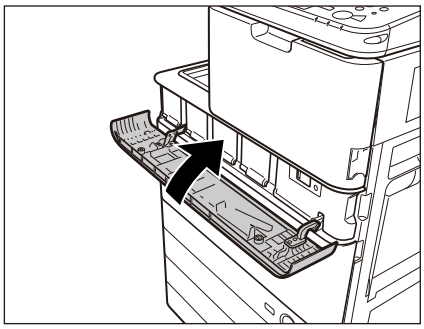

The toner confirmation screen is displayed.

CAUTION

When closing the toner replacement cover, be careful not to get your fingers caught, as this may result in personal injury.

Replacing the Waste Toner Container

When the waste toner container is full, the message <Replace the waste toner container.> appears on the touch panel display. Follow the instructions on the touch panel display, and the procedure described below to help you replace the waste toner container.

If you press [Close], you can continue operations, such as setting modes and scanning originals, even if you do not replace the waste toner container immediately.

WARNING

- **Do not burn or throw used waste toner containers into open flames. Also, do not store waste toner containers in places exposed to open flames, as this may cause the toner to ignite, resulting in burns or a fire.**
- **Your local authorized Canon dealer will dispose of the used waste toner container.**

CAUTION

Used toner cannot be reused. Do not mix new and used toner together.

IMPORTANT

- Use only waste toner containers intended for use with this machine.
- Do not replace the waste toner container before the message prompting you to replace it appears on the touch panel display.
- When attaching the waste toner container, make sure to push it in all the way. If the container is not pushed in all the way when you remove it, it may come out with its shutter open. Since this may cause toner to fly out, close the shutter with your hand.

NOTE

- Complete instructions on how to replace the waste toner container can be accessed by pressing [Previous] or [Next] on the touch panel display.
- If the waste toner container must be replaced during a print job, the remaining prints are made after the new waste toner container is installed.

1 **Open the front cover, holding both sides.**

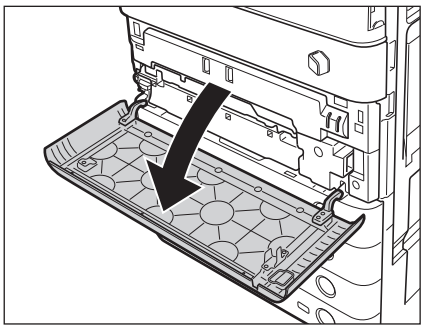

2 **Lower the locking lever.**

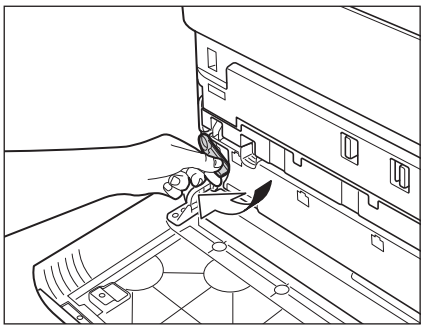

3 Pull out the waste toner container.

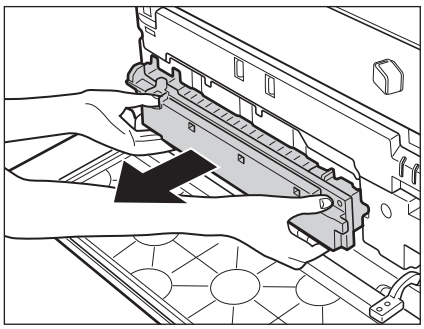

CAUTION

When removing the waste toner container, be careful not to tilt it, as the toner may spill and get onto your hands or clothing. If toner gets onto your hands or clothing, wash them immediately with cold water. Washing them with warm water will set the toner, and make it impossible to remove the toner stains.

4 Insert the new waste toner container.

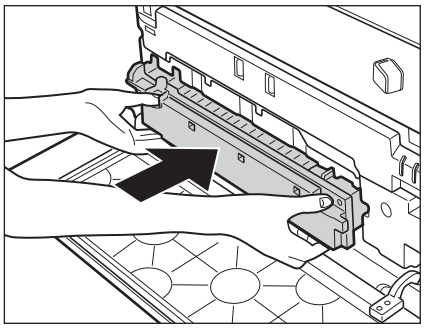

5 Return the locking lever to its original position.

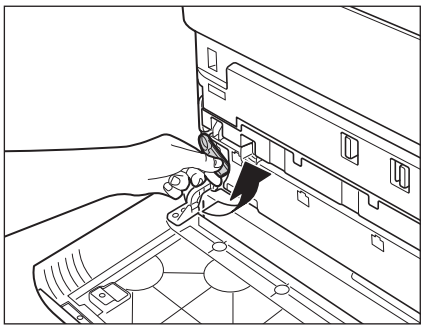

6 Close the front cover of the main unit.

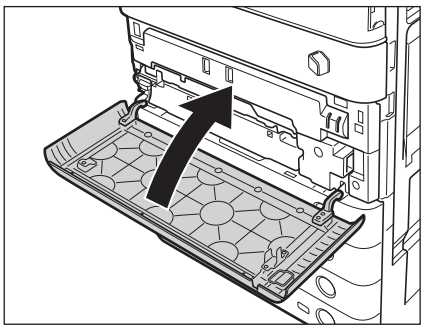

CAUTION

When closing the front cover, be careful not to get your fingers caught, as this may result in personal injury.

Routine Cleaning

If the original is not copied clearly, clean the following parts of the machine. For high-quality printouts, we recommend cleaning these parts once or twice a month.

- Platen glass
- Feeder and the underside of the feeder
- Feeder's rollers

WARNING

- **When cleaning the machine, first turn OFF the main power switch, and disconnect the power cord. Failure to observe these steps may result in a fire or electrical shock.**
- **Do not use alcohol, benzene, paint thinner, or other solvents for cleaning. Doing so may result in damage to the plastic parts.**
- **Disconnect the power cord from the power outlet regularly, and clean the area around the base of the power plug's metal pins and the power outlet with a dry cloth to ensure that all dust and grime is removed. If the power cord is connected for a long period of time in a damp, dusty, or smoky location, dust can build up around the power plug and become damp. This may cause a short circuit and result in a fire.**

Platen Glass and Cover

Clean the platen glass and the underside of platen cover by following the procedure below.

IMPORTANT

If the platen glass or the underside of the platen cover is dirty, the original may not be scanned clearly, or the size of the original may be detected incorrectly.

NOTE

This procedure is necessary only if the Color Image Reader Unit-B2 is attached.

1 **Clean the platen glass and the underside of the platen cover with a cloth dampened with water, and then wipe them clean with a soft, dry cloth.**

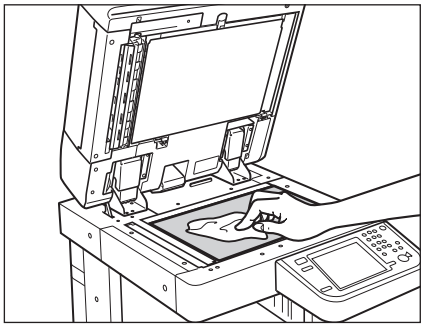

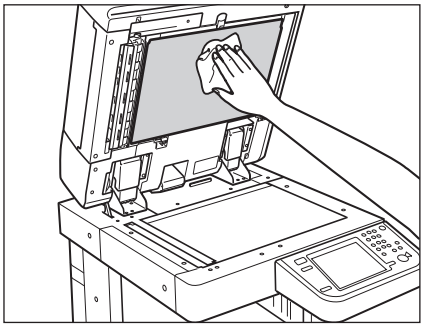

CAUTION

Do not dampen the cloth too much, as this may damage the original or break the machine.

Manual Feeder Cleaning

If originals that have been fed through the feeder have streaks or appear dirty, clean the feeder's scanning area and the rollers.

CAUTION

Do not dampen the cloth too much, as this may damage the original or break the machine.

IMPORTANT

If the document feed scanning area is dirty, documents may not be scanned clearly, and the size of the document may not be detected correctly.

Duplex Color Image Reader Unit-B1

NOTE

This procedure is necessary only if the Feeder (Duplex Color Image Reader Unit-B1) is attached.

1 **Open the feeder.**

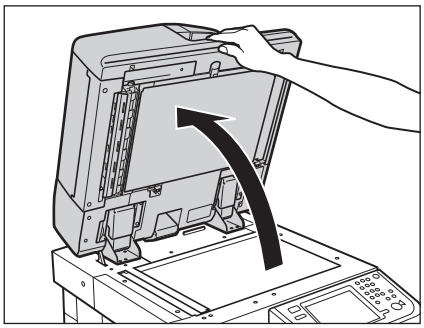

2 **Clean the original scanning area (thin glass strip) with a cloth dampened in water or a mild detergent, and then wipe the area with a soft dry cloth.**

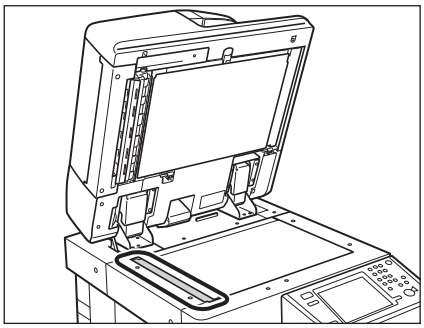

3 **Pull the lever above the feeder, and open the document scan cover.**

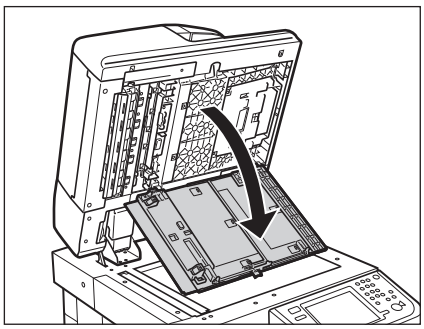

CAUTION

Open the document scan cover carefully, as not to scratch the platen glass.

4 **Open the inside cover.**

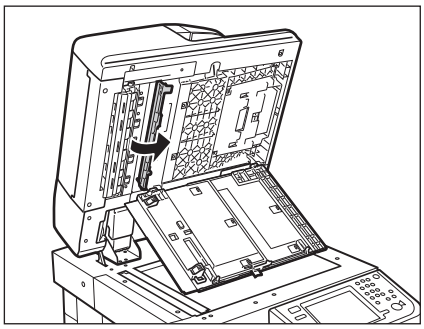

5 **Clean the feed scanning area with a cloth dampened in water or a mild detergent, and then wipe the area with a soft dry cloth.**

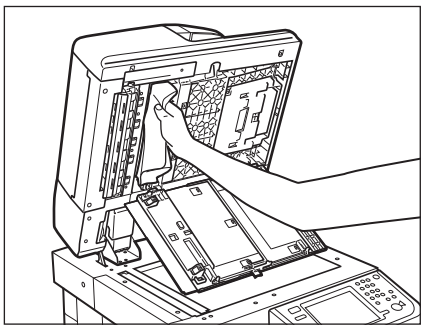

6 **Close the inside cover.**

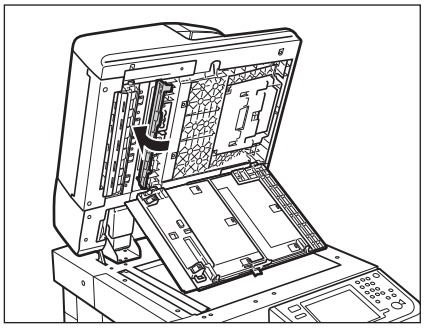

CAUTION

When closing the inside cover, be careful not to get your fingers caught, as this may result in personal injury.

7 Close the document scan cover.

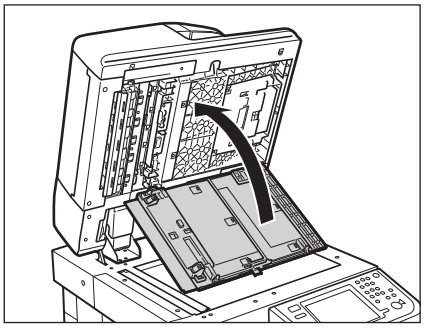

CAUTION

When closing the document scan cover, be careful not to get your fingers caught, as this may result in personal injury.

8 Close the feeder.

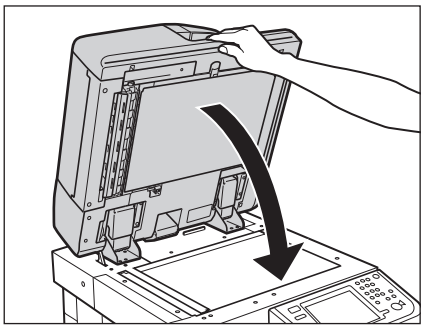

CAUTION

- **When closing the feeder, be careful not to get your fingers caught, as this may result in personal injury.**
- **Be aware that the light emitted from the platen glass may be very bright when closing the feeder.**
- **Do not dampen the cloth too much, as this may damage the original or break the machine.**

Color Image Reader Unit-B1

IMPORTANT

- Spin the rollers while cleaning them.
- This procedure is necessary only if the Feeder (Color Image Reader Unit-B1) is attached.

1 **Pull the lever, and open the feeder cover.**

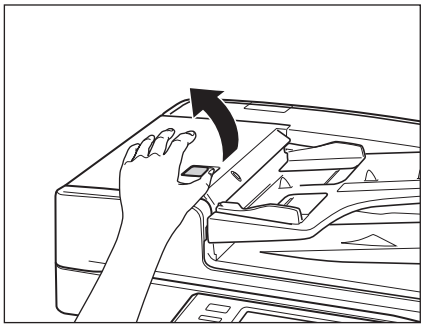

2 **Clean the rollers (a total of three places) inside the feeder cover with a cloth dampened with water. Then, wipe the area with a soft, dry cloth.**

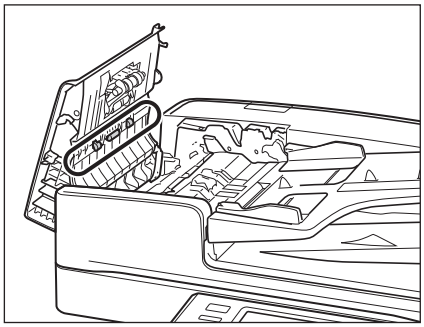

3 **Open the inner cover, holding it by its front tab.**

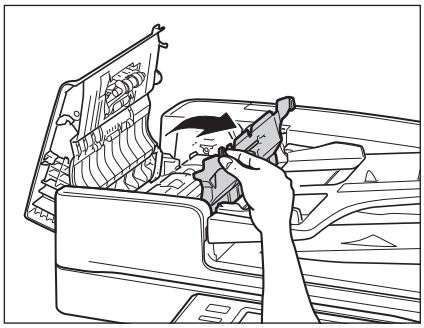

4 **Clean the rollers (a total of three places) inside the inner cover with a cloth dampened with water. Then, wipe the area with a soft, dry cloth.**

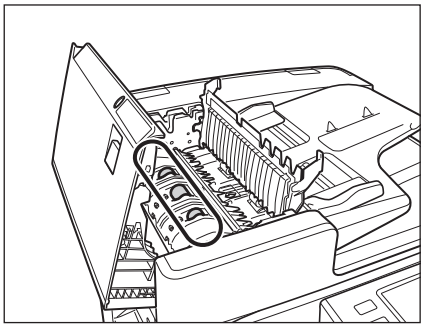

5 **Clean the transparent plastic part of the inner cover with a cloth dampened with water. Then, wipe the area with a soft, dry cloth.**

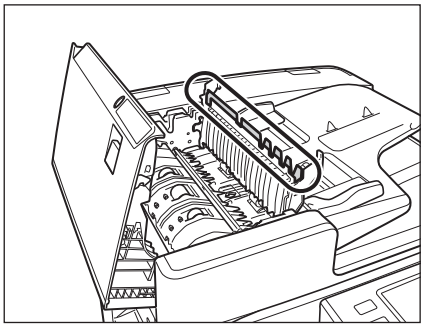

6 **Close the inner cover.**

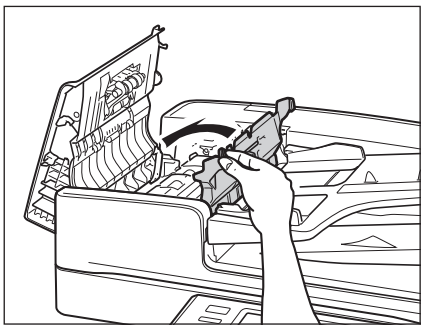

CAUTION

When closing the inner cover, be careful not to get your fingers caught, as this may result in personal injury.

7 **Close the feeder cover.**

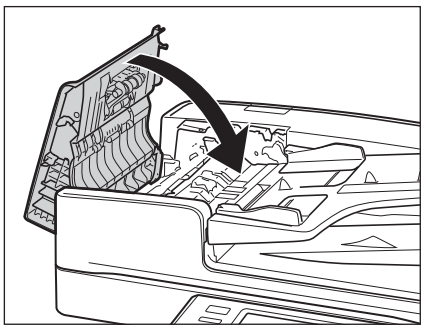

CAUTION

When closing the feeder cover, be careful not to get your fingers caught, as this may result in personal injury.

8 **Lift the feeder.**

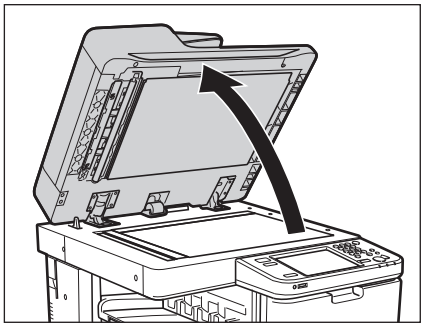

9 **Clean the feeder scanning area with a cloth dampened with water. Then, wipe the area with a soft, dry cloth.**

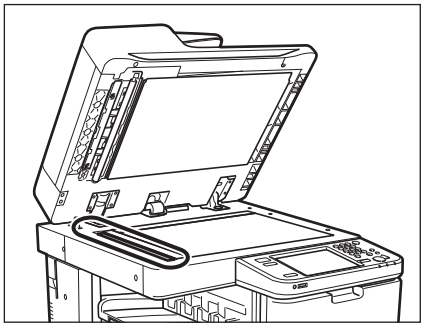

10 **While turning the resin roller, clean the resin roller and the area around the resin roller with a cloth dampened with water. Then, wipe the area with a soft, dry cloth.**

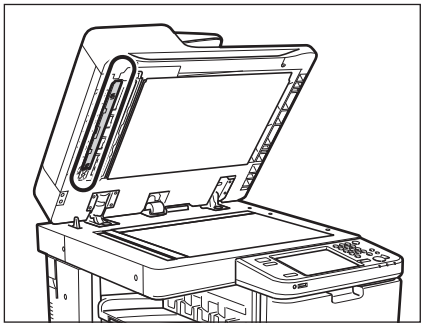

11 **Close the feeder.**

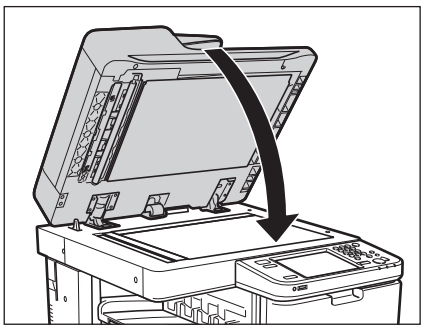

CAUTION

- **When closing the feeder, be careful not to get your fingers caught, as this may result in personal injury.**
- **Be aware that the light emitted from the platen glass may be very bright when closing the feeder.**

Automatic Feeder Cleaning

If your originals have black streaks or appear dirty after scanning them through the feeder, clean the rollers of the feeder.

IMPORTANT

This procedure is necessary only if the Feeder is attached.

NOTE

- It takes approximately 20 seconds to clean the feeder.
- Feeder Cleaning cannot be performed during printing.

1 **Press (Settings/Registration) → [Adjustment/Maintenance] → [Maintenance] → [Clean Feeder].**

2 **Place 10 sheets of blank paper into the feeder → press [Start].**

Make sure that you fan the sheets of paper well.

Use normal A4 paper.

When cleaning is complete, try scanning again.

NOTE

To cancel feeder cleaning while it is in progress, press [Cancel].

Cleaning the Inside of the Main Unit

If streaks appear on printed output, or random parts of the printed image are missing, the inside of the main unit may be dirty. In this case, clean the inside of the main unit, as described below.

1 **Press (Settings/Registration) → [Adjustment/Maintenance] → [Maintenance] → [Clean Inside Main Unit] .**

2 **Press [Start].**

When cleaning is complete, try printing again.

Cleaning the Dust Proof Glass

If the dust proof glass is dirty, print defects may occur on the print output. Follow the procedure described below to clean the dust proof glass.

1 **Open the front cover, holding both sides.**

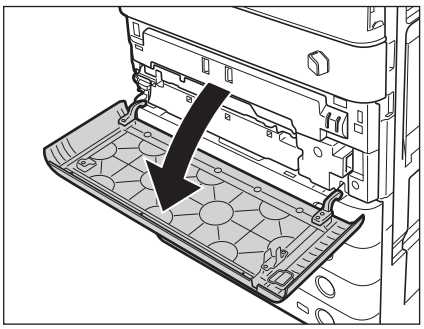

2 **Remove the dust proof glass cleaner from the rear side of the front cover by sliding it to the left side.**

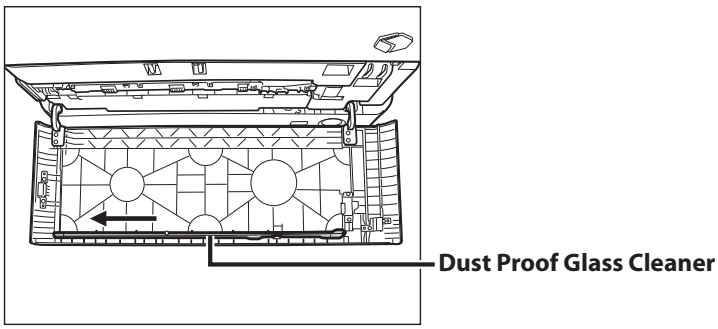

3 Hold the dust proof glass cleaner so that the pad on the tip is facing down, push it back as far as it goes, and then slowly move it up and down.

Clean the four locations as shown below. There are marks on the main unit that indicate the cleaning locations. Check these marks when cleaning the dust proof glass.

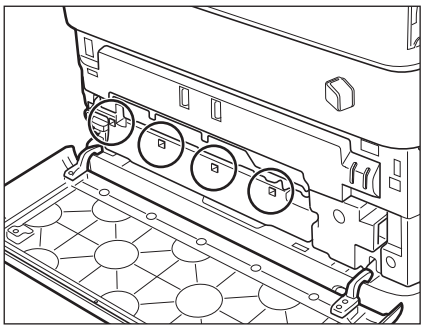

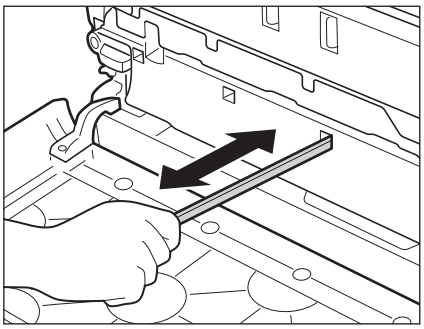

4 When you have finished cleaning the dust proof glass, gently push the dust proof glass cleaner back onto the rear side of the front cover.

Place the dust proof glass cleaner back on the rear side of the front cover with its tip facing the left direction.

5 Close the front cover of the main unit.

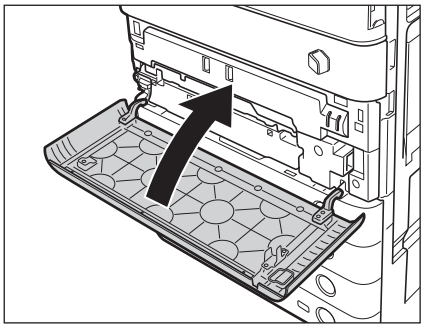

CAUTION

When closing the front cover of the main unit, be careful not to get your fingers caught, as this may result in personal injury.

Consumables

The following consumables are available from Canon. For more information, contact your local authorized Canon dealer.

We recommend that you order paper stock and toner from your local authorized Canon dealer before your stock runs out.

Paper Stock

In addition to plain paper (A3, B4, A4, B5, and A5), recycled paper, color paper, transparencies (recommended for this machine), tracing paper, labels, and other types of paper stock are available. For more information, contact your local authorized Canon dealer.

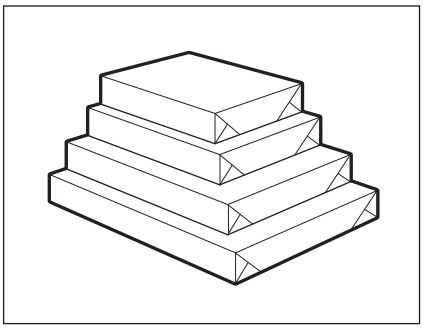

CAUTION

Do not store paper in places exposed to open flames, as this may cause the paper to ignite, resulting in burns or a fire.

IMPORTANT

To prevent moisture build-up, tightly wrap any remaining paper in its original package for storage.

NOTE

- For high-quality printouts, use paper recommended by Canon.
- Some commercially available paper types are not suited for this machine. Contact your local authorized Canon dealer when you need to purchase paper.

Toner

If a message prompting you to replace the toner cartridge appears on the touch panel display, replace the used toner cartridge with a new one.

Toner comes in four colours: black, cyan, magenta, and yellow.

Check the toner colour that you need to replace before ordering toner from your local authorized Canon dealer. Also, when replacing the toner cartridge, make sure that you replace toner of the correct colour.

Use only toner cartridges intended for use with this machine.

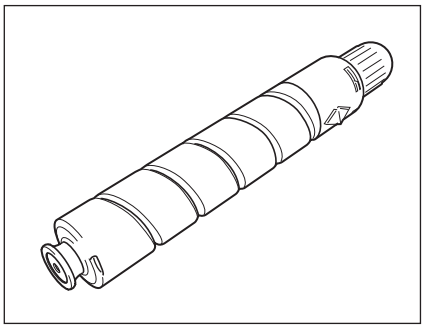

Black Toner Cartridge

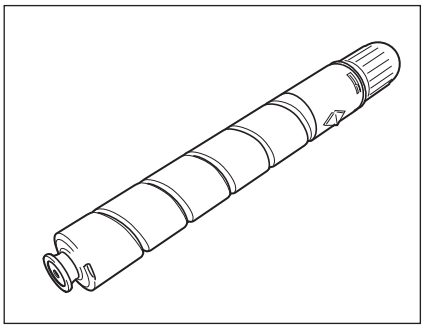

Cyan, Magenta, or Yellow Toner Cartridge

WARNING

- **Do not burn or throw used toner cartridges into open flames, as this may cause the toner remaining inside the cartridges to ignite, resulting in burns or a fire.**
- **Do not store toner cartridges in places exposed to open flames, as this may cause the toner to ignite, resulting in burns or a fire.**

CAUTION

Keep toner and other consumables out of the reach of small children. If these items are ingested, consult a physician immediately.

IMPORTANT

- Store toner cartridges in a cool location, away from direct sunlight. (The recommended storage conditions are: temperatures below 30 °C, and humidity below 80%.)
- [Be careful of counterfeit toner cartridges]
  Please be aware that there are counterfeit Canon toner cartridges in the marketplace. Use of counterfeit toner cartridge may result in poor print quality or machine performance. Canon is not responsible for any malfunction, accident or damage caused by the use of counterfeit toner cartridge.
  For more information, see http://www.canon.com/counterfeit.

■ Stamp Cartridge

The stamp cartridge is used to stamp originals. Use the tweezers provided to remove and replace the stamp cartridge.

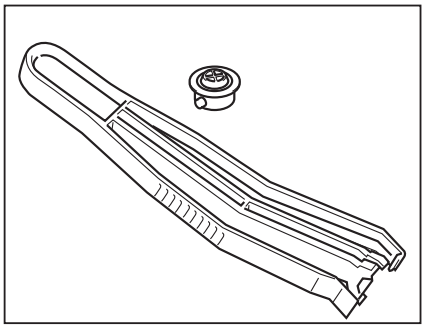

Troubleshooting

2
CHAPTER

This chapter explains what to do in response to a paper jam in the main unit, or optional units, and an error message display.

Reducing the Frequency of Paper Jams 2-2

Clearing Paper Jams 2-3
- Screens Indicating the Locations of Paper Jams 2-3
- Paper Output Unit (Inside the Main Unit) 2-5
- Fixing Unit (Inside the Main Unit) 2-7
- Entrance of Duplexing Unit (Inside the Main Unit) 2-8
- Duplexing Unit (Inside the Main Unit) 2-10
- Multi-Purpose Tray 2-11
- Paper Drawer 1 2-13
- Paper Drawer 2 2-15
- Cassette Feeding Unit-AD1 (Optional) 2-18
- Paper Deck Unit-B1 (Optional) 2-20
- Feeder (Optional) 2-23
- Inner Finisher-A1 (Optional) 2-26
- Inside the Top Cover of the Staple Finisher-C1/Booklet Finisher-C1 (Optional) 2-29
- Inside the Buffer Pass Unit-G1 of the Staple Finisher-C1/Booklet Finisher-C1 (Optional) 2-30
- Inside the Front Cover of the Booklet Finisher-C1 (Optional) 2-31
- Saddle Stitcher Unit (Optional) 2-33
- Puncher (Optional) 2-36
- Inner 2Way Tray-F1 (Optional) 2-38
- Copy Tray-J1 (Optional) 2-40

Clearing Staple Jams 2-42
- Inner Finisher-A1 (Optional) 2-42
- Staple Finisher-C1/Booklet Finisher-C1 (Optional) 2-44
- Saddle Stitcher Unit (Optional) 2-46

List of Error Messages 2-50
- Self-Diagnostic Display 2-50
- List of Error Codes without Messages 2-53

If Memory Becomes Full during Scanning 2-59
- For the Copy function 2-59
- For the Fax/Scan and Send function 2-59
- For the Scan and Store function 2-60

Service Call Message 2-61
- Contacting Your Local Authorized Canon Dealer 2-61
- Setting the Limited Functions Mode from the Service Call Message Screen 2-62
- Functions Available When the Printer/Scanner Cannot Be Used Due to an Error 2-63

When the Power Does Not Turn ON 2-65

Printer/Fax Driver Troubleshooting 2-66

Reducing the Frequency of Paper Jams

If paper jams occur frequently, even though there is no apparent problem with the machine, either one of the following two reasons may be the cause. Follow the instructions described below to reduce the frequency of paper jams.

■ There are torn pieces of paper left inside the machine.

Pulling jammed paper out of the machine by force may leave parts of the paper torn inside, leading to frequent paper jams. If paper tears while you are trying to remove jammed paper from the machine, make sure that you remove all of the torn pieces.

■ The paper loaded in the paper drawer differs from the setting.

Make sure that the paper size plate of a paper drawer matches the size of the paper loaded in the paper drawer.

Clearing Paper Jams

If a paper jam occurs, a screen indicating the location of the paper jam appears on the touch panel display.

Screens Indicating the Locations of Paper Jams

The screen indicating the location of the paper jam and instructions on how to clear the paper jam appear on the touch panel display. This screen repeatedly appears on the touch panel display until the paper jam is entirely cleared.

■ Example of a Screen Indicating the Location of the Paper Jam

You can check the location of the paper jam on the touch panel display.

If you press [Close], you can continue operations, such as setting modes, even if the jammed paper is not removed immediately.

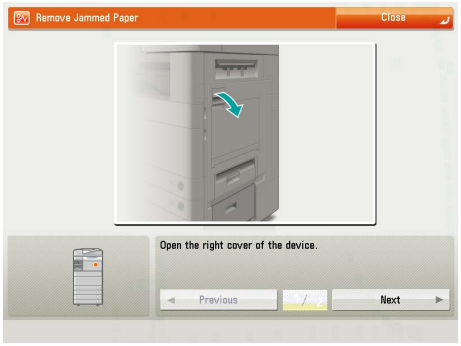

IMPORTANT

If a paper jam occurs in the Feeder, you cannot continue operating the machine. Follow the directions on the touch panel display to clear the paper jam. (See "Feeder (Optional)," on p. 2-23.)

■ Example of a Screen Indicating How to Clear the Paper Jam

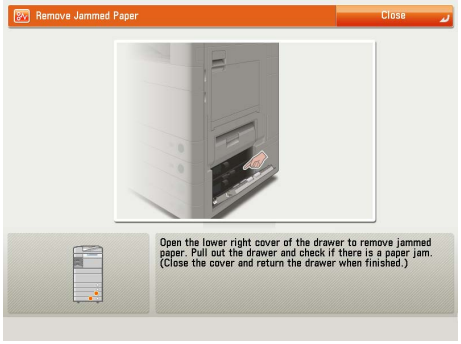

WARNING

There are some areas inside the machine which are subject to high-voltages. When removing jammed paper or when inspecting the inside of the machine, do not allow necklaces, bracelets, or other metal objects to touch the inside of the machine, as this may result in burns or electrical shock.

CAUTION

- **When removing jammed originals or paper, take care not to cut your hands on the edges of the originals or paper.**
- **When removing paper which has become jammed inside the machine, take care not to cut your hands or injure yourself on the inside of the machine. If you cannot remove the paper, contact your local authorized Canon dealer.**
- **When removing paper which has become jammed inside the machine, take care not to allow the toner on the jammed paper to come into contact with your hands or clothing, as this will dirty your hands or clothing. If they become dirty, wash them immediately with cold water. Washing them with warm water will set the toner, and make it impossible to remove the toner stains.**
- **When removing paper which has become jammed inside the machine, remove the jammed paper gently to prevent the toner on the paper from scattering and getting into your eyes or mouth. If the toner gets into your eyes or mouth, wash them immediately with cold water and immediately consult a physician.**
- **The fixing unit and its surroundings inside the machine may become hot during use. When removing jammed paper or when inspecting the inside of the machine, do not touch the fixing unit and its surroundings, as doing so may result in burns or electrical shock.**
- **When removing jammed paper or when inspecting the inside of the machine, do not be exposed to the heat emitted from the fixing unit and its surroundings for prolonged time, as doing so may result in low temperature burns, even though you did not touch them directly.**
- **If a paper jam occurs, follow the directions on the touch panel display to remove any jammed paper from inside the machine. Do not insert your fingers into the part not indicated on the touch panel display, as doing so may result in personal injury or burns.**
- **After clearing all paper jams, remove your hands from the machine immediately. Even if the machine is not in operation, your hands, hair, or clothing may get caught in the feed rollers, which could result in personal injury or damage if the machine suddenly starts printing.**

NOTE

If paper is jammed in several locations, remove the jammed paper in the order indicated on the touch panel display.

1 Inspect all paper jam locations indicated on the touch panel display, and remove any jammed paper.

See the appropriate pages below for instructions on finding and removing jammed paper. Or, you can follow the instructions on the touch panel display.

- Paper Output Unit (See "Paper Output Unit (Inside the Main Unit)," on p. 2-5.)
- Fixing Unit (See "Fixing Unit (Inside the Main Unit)," on p. 2-7.)
- Entrance of Duplexing Unit (See "Entrance of Duplexing Unit (Inside the Main Unit)," on p. 2-8.)
- Duplexing Unit (See "Duplexing Unit (Inside the Main Unit)," on p. 2-10.)
- Multi-Purpose Tray (See "Multi-Purpose Tray," on p. 2-11.)
- Paper Drawer 1 (See "Paper Drawer 1," on p. 2-13.)
- Paper Drawer 2 (See "Paper Drawer 2," on p. 2-15.)

If jammed paper tears while it is being removed, be sure to remove any remaining pieces from inside the machine.

IMPORTANT

If the machine's power is turned OFF when there is a paper jam, detection of paper jams in the paper drawers is not possible after the power is turned back ON. Clear paper jams without turning the power OFF.

NOTE

Some areas that are shown to have paper jams may not actually have paper jams. However, always check all locations indicated on the touch panel display in the order that is given.

2 If a paper jam occurs inside an optional unit, see the instructions on the following pages.

- Cassette Feeding Unit-AD1 (Optional) (See "Cassette Feeding Unit-AD1 (Optional)," on p. 2-18.)
- Paper Deck Unit-B1 (Optional) (See "Paper Deck Unit-B1 (Optional)," on p. 2-20.)
- Feeder (Optional) (See "Feeder (Optional)," on p. 2-23.)
- Inner Finisher-A1 (Optional) (See "Inner Finisher-A1 (Optional)," on p. 2-26.)
- Inner 2Way Tray-F1 (Optional) (See "Inner 2Way Tray-F1 (Optional)," on p. 2-38.)
- Copy Tray-J1 (Optional) (See "Copy Tray-J1 (Optional)," on p. 2-40.)
- Inside the Top Cover of the Staple Finisher-C1/Booklet Finisher-C1 (Optional) (See "Inside the Top Cover of the Staple Finisher-C1/Booklet Finisher-C1 (Optional)," on p. 2-29.)
- Inside the Buffer Pass Unit-G1 of the Staple Finisher-C1/Booklet Finisher-C1 (Optional) (See "Inside the Buffer Pass Unit-G1 of the Staple Finisher-C1/Booklet Finisher-C1 (Optional)," on p. 2-30.)
- Inside the Front Cover of the Booklet Finisher-C1 (Optional) (See "Inside the Front Cover of the Booklet Finisher-C1 (Optional)," on p. 2-31.)
- Saddle Stitcher Unit (Optional) (See "Saddle Stitcher Unit (Optional)," on p. 2-33.)
- Puncher (Optional) (See "Puncher (Optional)," on p. 2-36.)

3 **After you have removed all of the jammed paper in the locations indicated on the touch panel display, restore all levers and covers to their original positions.**

4 **Continue to follow the procedure and instructions on the touch panel display.**

Once you have removed all of the jammed paper in locations other than the feeder, printing or copying resumes.

If there is paper that still needs to be removed, a screen indicating how to clear that paper jam appears on the touch panel display. Repeat the procedure from step 1.

NOTE

You do not have to re-enter the number of copies or prints, even if you are printing multiple sets. The machine automatically recalculates the number of copies or prints to make based on the number of sheets that have jammed.

Paper Output Unit (Inside the Main Unit)

If a paper jam occurs inside the paper output unit, a screen prompting you to remove the jammed paper appears on the touch panel display. Check the location of the paper jam, and follow the procedure described below, and the procedure that appears on the touch panel display, to remove the jammed paper.

CAUTION

The fixing unit and its surroundings inside the machine may become hot during use. When removing jammed paper or when inspecting the inside of the machine, do not touch the fixing unit and its surroundings, as doing so may result in burns or electrical shock.

1 **Grip the handle, and open the lower right and upper right covers of the machine.**

If the Paper Deck Unit-B1 is attached to the main unit, move the paper deck away from the main unit before proceeding with this procedure. For more information, see e-Manual > Optional Products.

If the Copy Tray-J1 is attached to the main unit, remove all output paper from the tray. For more information, see e-Manual > Optional Products.

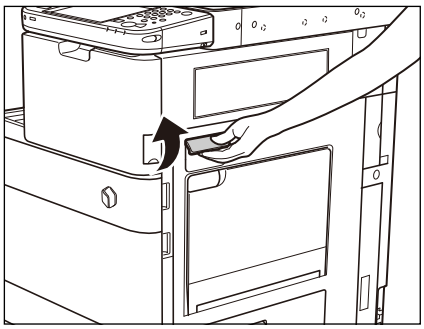

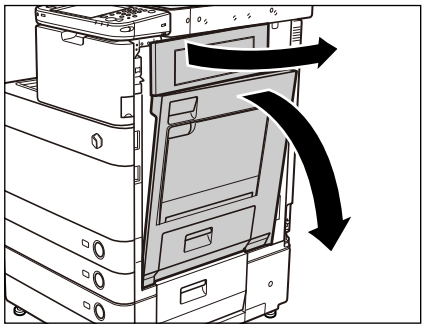

2 **Pull out the paper output unit.**

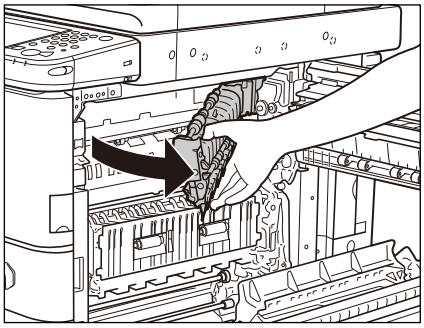

3 Remove any jammed paper inside the machine.

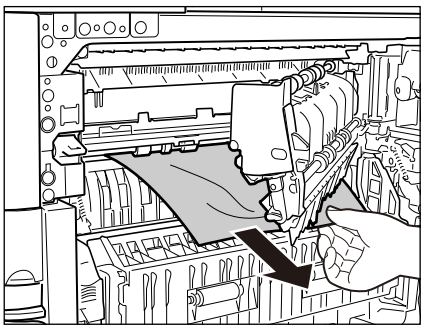

4 Push the paper output unit back into its original position.

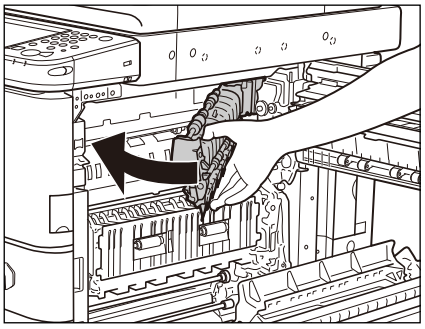

5 Gently close the upper right cover and then close the lower right cover until it clicks into place in the closed position.

If the Paper Deck Unit-B1 was moved away from the main unit, reconnect it to the main unit. For more information, see e-Manual > Optional Products.

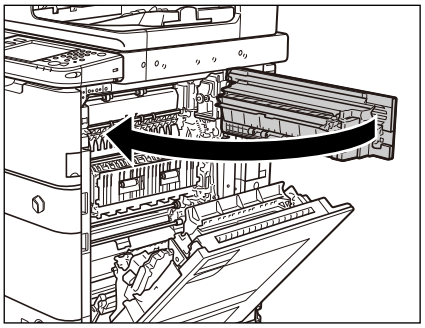

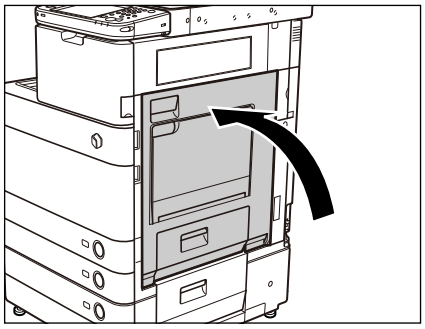

CAUTION

When closing the upper and lower right covers of the main unit, be careful not to get your fingers caught, as this may result in personal injury.

6 Follow the instructions on the touch panel display.

NOTE

The screen indicating the location of the paper jam repeatedly appears on the touch panel display until the paper jam is entirely cleared. For more information, see "Screens Indicating the Locations of Paper Jams," on p. 2-3.

Fixing Unit (Inside the Main Unit)

If a paper jam occurs in the fixing unit area, a screen prompting you to remove the jammed paper appears on the touch panel display. Check the location of the paper jam, and follow the procedure described below, and the procedure that appears on the touch panel display, to remove the jammed paper.

CAUTION

The fixing unit and its surroundings inside the machine may become hot during use. When removing jammed paper or when inspecting the inside of the machine, do not touch the fixing unit and its surroundings, as doing so may result in burns or electrical shock.

1 Grip the handle, and open the lower right and upper right covers of the machine.

If the Paper Deck Unit-B1 is attached to the main unit, move the paper deck away from the main unit before proceeding with this procedure. For more information, see e-Manual > Optional Products.

If the Copy Tray-J1 is attached to the main unit, remove all output paper from the tray. For more information, see e-Manual > Optional Products.

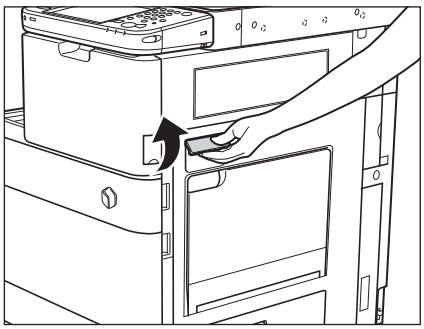

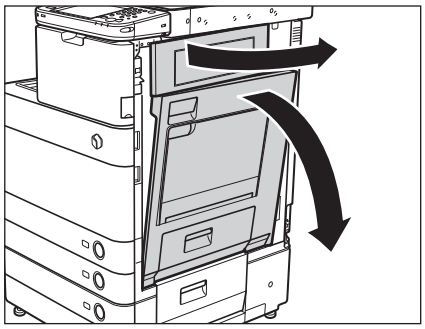

2 Pull down the upper cover of the fixing unit by its tab, and then remove any jammed paper.

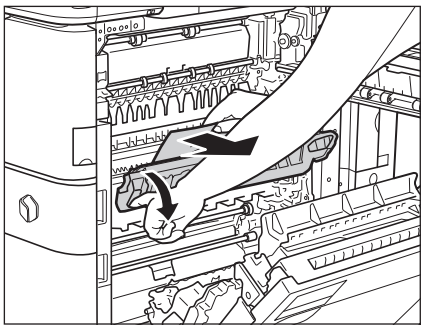

After the jammed paper is removed, return the upper cover of the fixing unit back to its original position.

CAUTION

The fixing unit and its surroundings are subject to high-temperatures. When removing jammed paper, take care not to touch anything in this area, except the jammed paper and the upper cover.

IMPORTANT

If you cannot remove the jammed paper, return the upper cover of the fixing unit back to its original position, and then remove the jammed paper from the lower part of the fixing unit.

3 Gently close the upper right cover and then close the lower right cover until it clicks into place in the closed position.

If the Paper Deck Unit-B1 was moved away from the main unit, reconnect it to the main unit. For more information, see e-Manual > Optional Products.

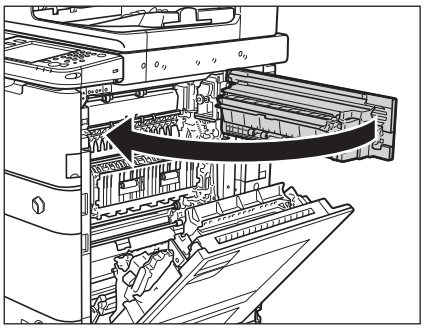

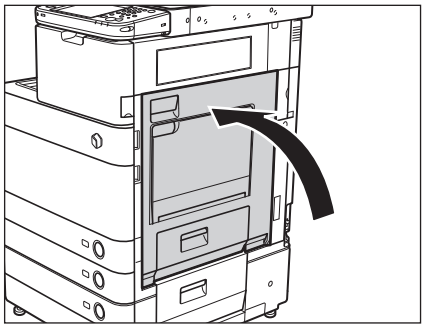

CAUTION

When closing the upper and lower right covers of the main unit, be careful not to get your fingers caught, as this may result in personal injury.

4 Follow the instructions on the touch panel display.

NOTE

The screen indicating the location of the paper jam repeatedly appears on the touch panel display until the paper jam is entirely cleared. For more information, see "Screens Indicating the Locations of Paper Jams," on p. 2-3.

Entrance of Duplexing Unit (Inside the Main Unit)

If a paper jam occurs in the entrance of the duplexing unit, a screen prompting you to remove the jammed paper appears on the touch panel display. Check the location of the paper jam, and follow the procedure described below, and the procedure that appears on the touch panel display, to remove the jammed paper.

CAUTION

The fixing unit and its surroundings inside the machine may become hot during use. When removing jammed paper or when inspecting the inside of the machine, do not touch the fixing unit and its surroundings, as doing so may result in burns or electrical shock.

1 Grip the handle, and open the lower right and upper right covers of the machine.

If the Paper Deck Unit-B1 is attached to the main unit, move the paper deck away from the main unit before proceeding with this procedure. For more information, see e-Manual > Optional Products.

If the Copy Tray-J1 is attached to the main unit, remove all output paper from the tray. For more information, see e-Manual > Optional Products.

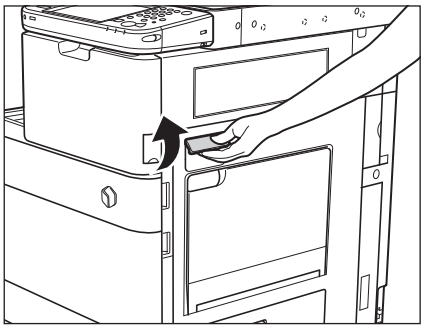

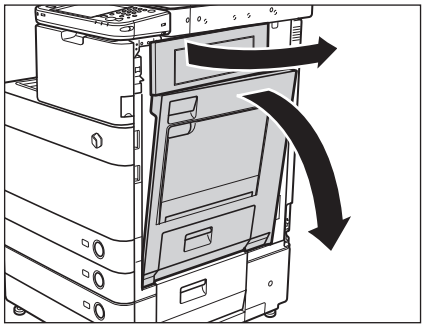

2 Remove any jammed paper in the upper part of the duplexing unit.

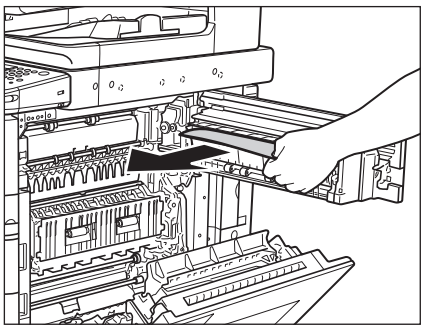

3 Remove any jammed paper in the lower part of the duplexing unit.

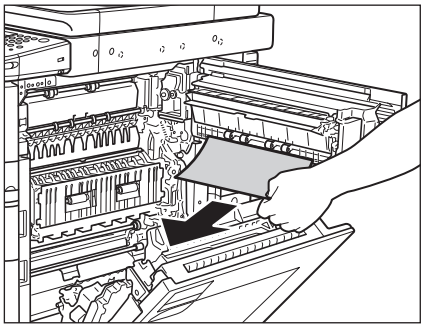

4 Gently close the upper right cover and then close the lower right cover until it clicks into place in the closed position.

If the Paper Deck Unit-B1 was moved away from the main unit, reconnect it to the main unit. For more information, see e-Manual > Optional Products.

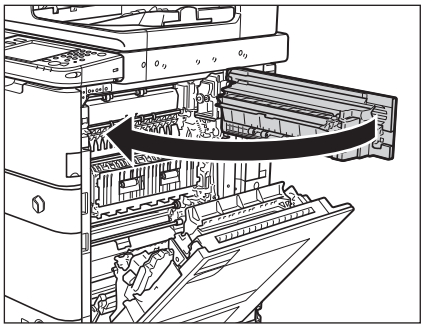

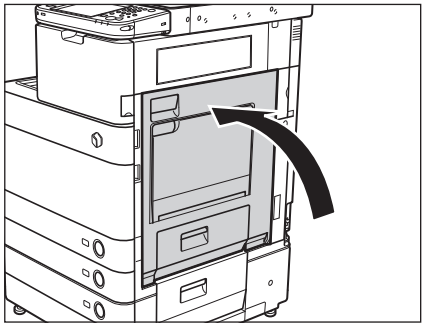

CAUTION

When closing the upper and lower right covers of the main unit, be careful not to get your fingers caught, as this may result in personal injury.

5 Follow the instructions on the touch panel display.

NOTE

The screen indicating the location of the paper jam repeatedly appears on the touch panel display until the paper jam is entirely cleared. For more information, see "Screens Indicating the Locations of Paper Jams," on p. 2-3.

Duplexing Unit (Inside the Main Unit)

If a paper jam occurs inside the duplexing unit, a screen prompting you to remove the jammed paper appears on the touch panel display. Check the location of the paper jam, and follow the procedure described below, and the procedure that appears on the touch panel display, to remove the jammed paper.

CAUTION

The fixing unit and its surroundings inside the machine may become hot during use. When removing jammed paper or when inspecting the inside of the machine, do not touch the fixing unit and its surroundings, as doing so may result in burns or electrical shock.

1 Grip the handle, and open the lower right and upper right covers of the machine.

If the Paper Deck Unit-B1 is attached to the main unit, move the paper deck away from the main unit before proceeding with this procedure. For more information, see e-Manual > Optional Products.

If the Copy Tray-J1 is attached to the main unit, remove all output paper from the tray. For more information, see e-Manual > Optional Products.

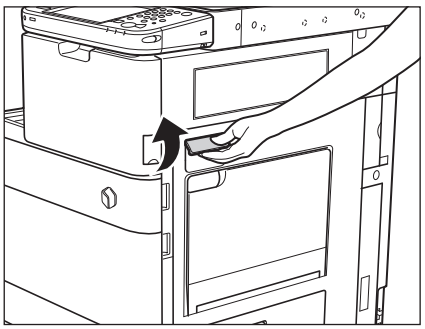

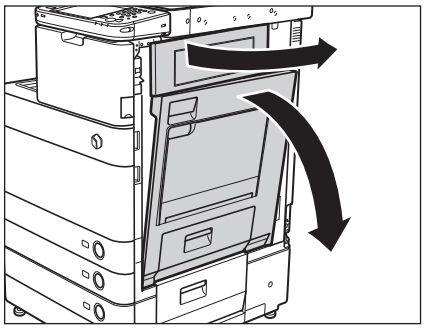

2 Remove any jammed paper from left or right side of the duplexing unit.

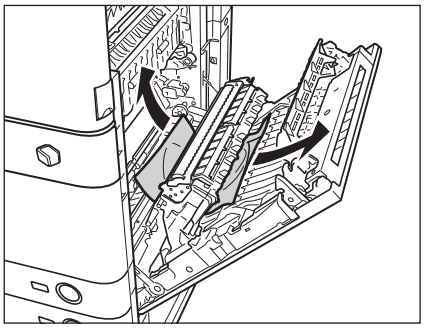

3 Gently close the upper right cover and then close the lower right cover until it clicks into place in the closed position.

If the Paper Deck Unit-B1 was moved away from the main unit, reconnect it to the main unit. For more information, see e-Manual > Optional Products.

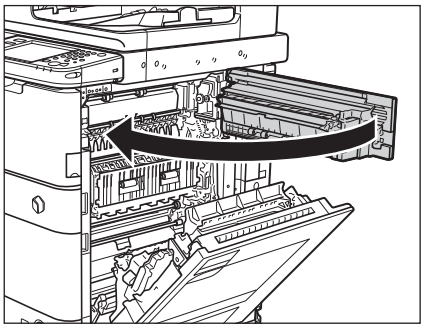

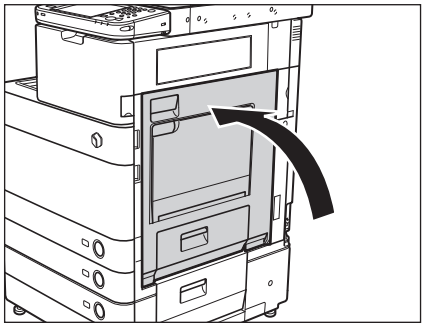

CAUTION

When closing the upper and lower right covers of the main unit, be careful not to get your fingers caught, as this may result in personal injury.

4 **Follow the instructions on the touch panel display.**

NOTE

The screen indicating the location of the paper jam repeatedly appears on the touch panel display until the paper jam is entirely cleared. For more information, see "Screens Indicating the Locations of Paper Jams," on p. 2-3.

Multi-Purpose Tray

If a paper jam occurs inside the multi-purpose tray, a screen prompting you to remove the jammed paper appears on the touch panel display. Check the location of the paper jam, and follow the procedure described below, and the procedure that appears on the touch panel display, to remove the jammed paper.

1 **Remove all of the paper that is not jammed from the multi-purpose tray.**

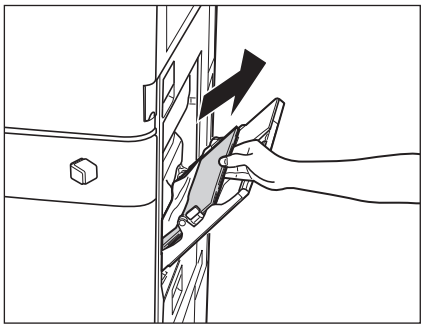

2 **Remove any jammed paper.**

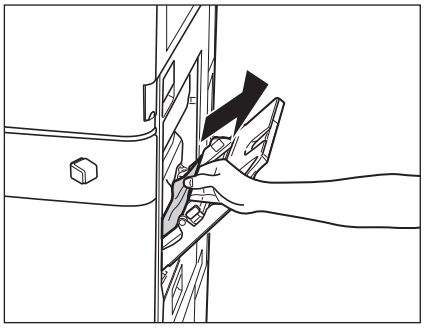

3 **Grip the handle, and open the lower right and upper right covers of the machine.**

If the Paper Deck Unit-B1 is attached to the main unit, move the paper deck away from the main unit before proceeding with this procedure. For more information, see e-Manual > Optional Products.

If the Copy Tray-J1 is attached to the main unit, remove all output paper from the tray. For more information, see e-Manual > Optional Products.

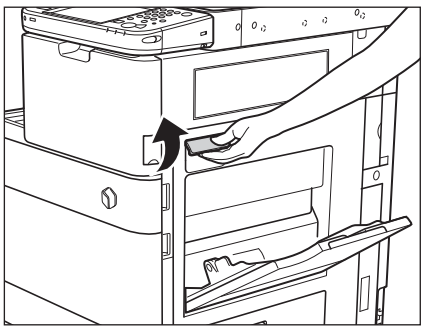

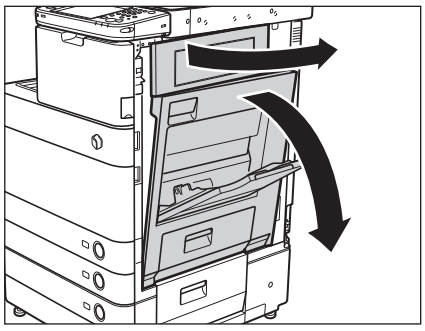

4 **Remove any jammed paper from the multi-purpose tray inside the lower right cover of the main unit.**

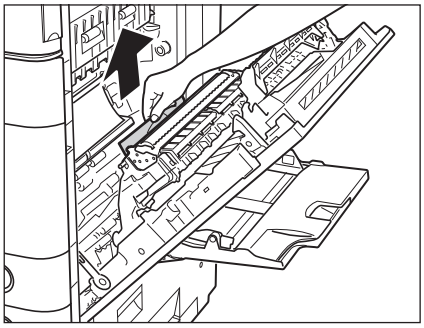

5 **Remove any jammed paper located between the main unit and the lower right cover.**

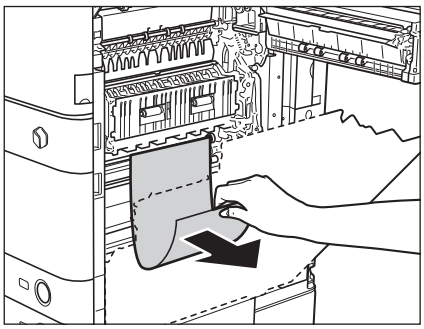

6 **Gently close the upper right cover and then close the lower right cover until it clicks into place in the closed position.**

If the Paper Deck Unit-B1 was moved away from the main unit, reconnect it to the main unit. For more information, see e-Manual > Optional Products.

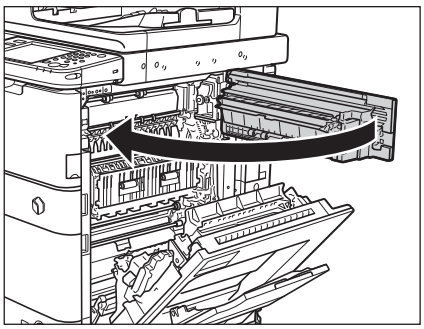

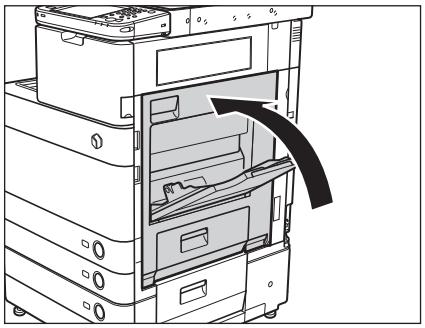

CAUTION

When closing the upper and lower right covers of the main unit, be careful not to get your fingers caught, as this may result in personal injury.

7 **Follow the instructions on the touch panel display.**

NOTE

The screen indicating the location of the paper jam repeatedly appears on the touch panel display until the paper jam is entirely cleared. For more information, see "Screens Indicating the Locations of Paper Jams," on p. 2-3.

Paper Drawer 1

If a paper jam occurs inside Paper Drawer 1, a screen prompting you to remove the jammed paper appears on the touch panel display. Check the location of the paper jam, and follow the procedure described below, and the procedure that appears on the touch panel display, to remove the jammed paper.

CAUTION

When removing jammed paper, take care not to cut your hands on the edges of the paper.

1 Open the paper drawer's upper right cover.

If the Paper Deck Unit-B1 is attached to the main unit, move the paper deck away from the main unit before proceeding with this procedure. For more information, see e-Manual > Optional Products.

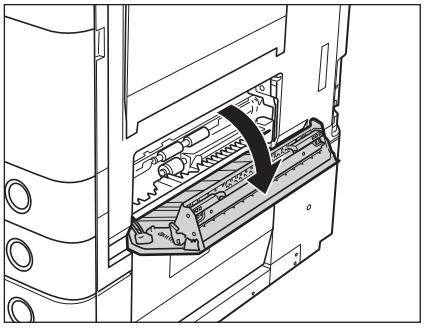

2 Remove any jammed paper.

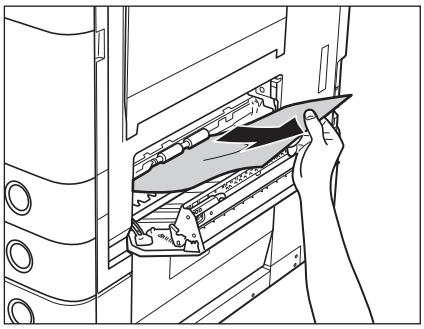

3 Press and release the button on Paper Drawer 1.

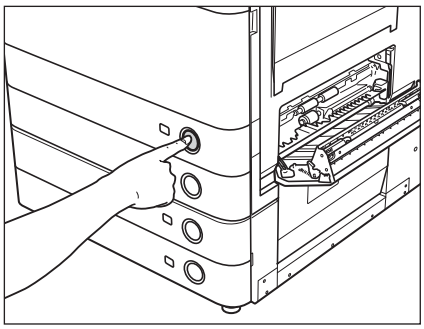

4 **Grip the handle, and pull out the paper drawer until it stops.**

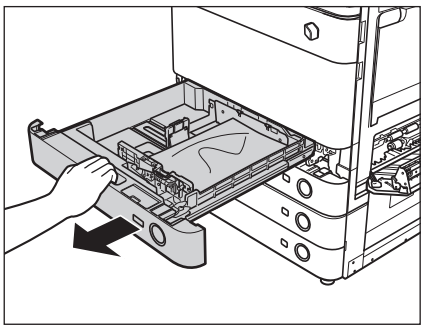

5 **Remove any jammed paper.**

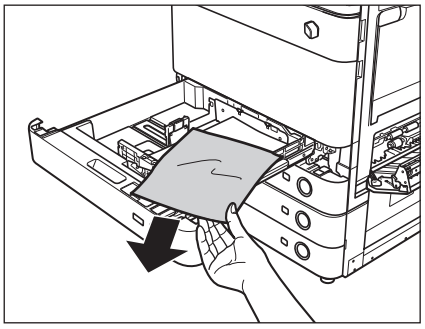

6 **Gently push Paper Drawer 1 back into the machine until it clicks into place in the closed position.**

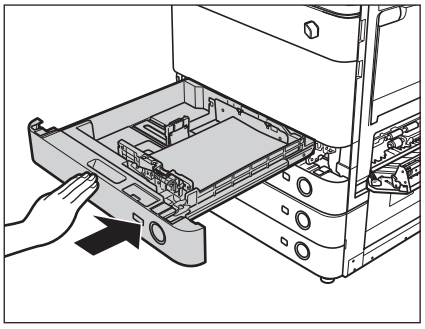

CAUTION

When returning the paper drawer to its original position, be careful not to get your fingers caught, as this may result in personal injury.

7 Close the paper drawer's upper right cover.

If the Paper Deck Unit-B1 was moved away from the main unit, reconnect it to the main unit. For more information, see e-Manual > Optional Products.

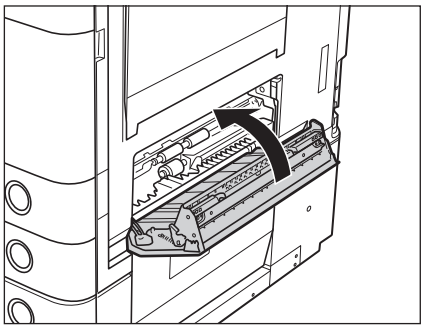

CAUTION

When closing the paper drawer's upper right cover, be careful not to get your fingers caught, as this may result in personal injury.

8 Follow the instructions on the touch panel display.

NOTE

The screen indicating the location of the paper jam repeatedly appears on the touch panel display until the paper jam is entirely cleared. For more information, see "Screens Indicating the Locations of Paper Jams," on p. 2-3.

Paper Drawer 2

If a paper jam occurs inside Paper Drawer 2, a screen prompting you to remove the jammed paper appears on the touch panel display. Check the location of the paper jam, and follow the procedure described below, and the procedure that appears on the touch panel display, to remove the jammed paper.

CAUTION

When removing jammed paper, take care not to cut your hands on the edges of the paper.

1 Open the paper drawer's upper right cover.

If the Paper Deck Unit-B1 is attached to the main unit, move the paper deck away from the main unit before proceeding with this procedure. For more information, see e-Manual > Optional Products.

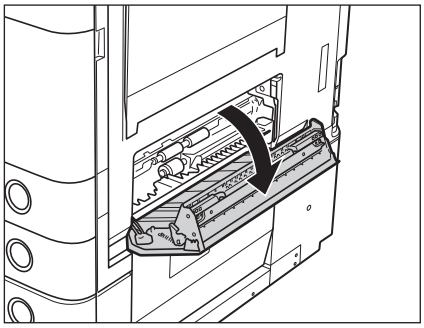

2 **Remove any jammed paper.**

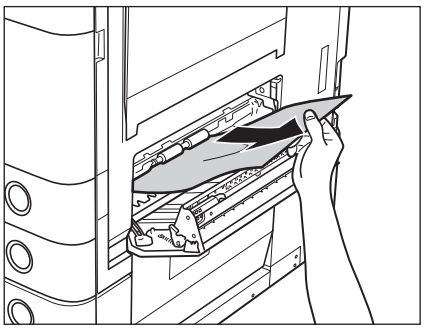

3 **Press and release the button on Paper Drawer 2.**

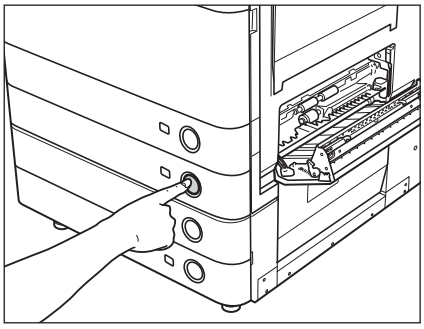

4 **Grip the handle, and pull out the paper drawer until it stops.**

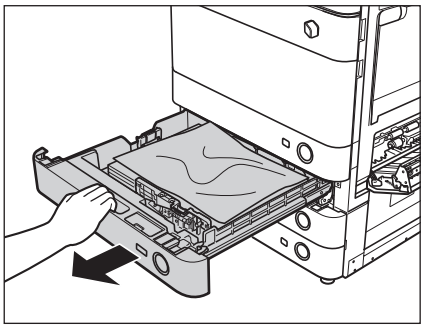

5 **Remove any jammed paper.**

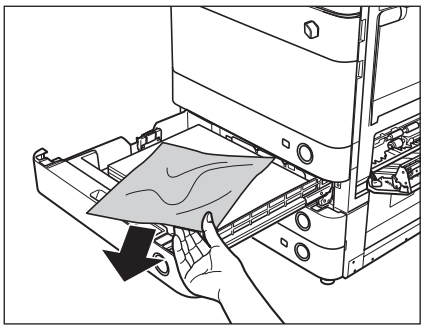

6 Gently push Paper Drawer 2 back into the machine until it clicks into place in the closed position.

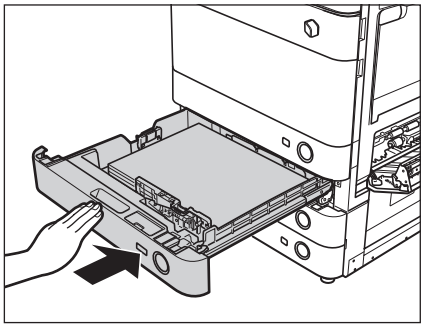

CAUTION

When returning the paper drawer to its original position, be careful not to get your fingers caught, as this may result in personal injury.

7 Close the paper drawer's upper right cover.

If the Paper Deck Unit-B1 was moved away from the main unit, reconnect it to the main unit. For more information, see e-Manual > Optional Products.

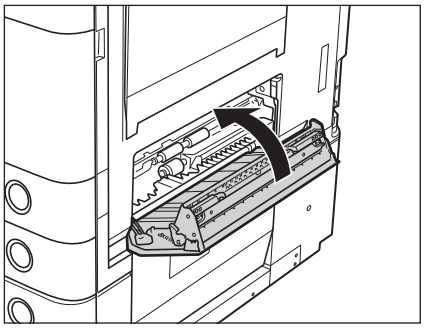

CAUTION

When closing the paper drawer's upper right cover, be careful not to get your fingers caught, as this may result in personal injury.

8 Follow the instructions on the touch panel display.

NOTE

The screen indicating the location of the paper jam repeatedly appears on the touch panel display until the paper jam is entirely cleared. For more information, see "Screens Indicating the Locations of Paper Jams," on p. 2-3.

Cassette Feeding Unit-AD1 (Optional)

If a paper jam occurs inside the Cassette Feeding Unit-AD1, a screen prompting you to remove the jammed paper appears on the touch panel display. Check the location of the paper jam, and follow the procedure described below, and the procedure that appears on the touch panel display, to remove the jammed paper.

WARNING

There are some areas inside the machine which are subject to high-voltages. When removing jammed paper or when inspecting the inside of the machine, do not allow necklaces, bracelets, or other metal objects to touch the inside of the machine, as this may result in burns or electrical shock.

CAUTION

When removing jammed paper, take care not to cut your hands on the edges of the paper.

IMPORTANT

If paper is jammed inside the cassette feeding unit, make sure to remove any jammed paper from inside the lower right cover first. Removing jammed paper from the cassette feeding unit first may tear the jammed paper, and leave pieces of the paper jammed inside the machine.

1 Open the lower right cover of the cassette feeding unit.

If the Paper Deck Unit-B1 is attached to the main unit, move the paper deck away from the main unit before proceeding with this procedure. For more information, see e-Manual > Optional Products.

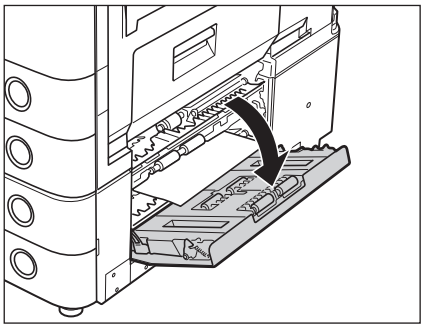

2 Remove any jammed paper.

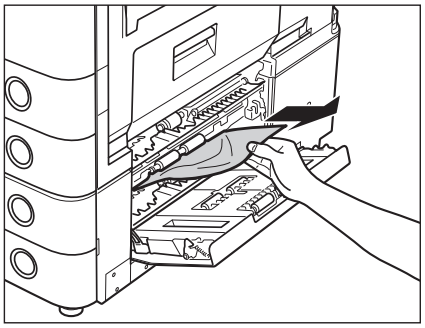

3 **Press and release the button on the paper drawer indicated on the touch panel display.**

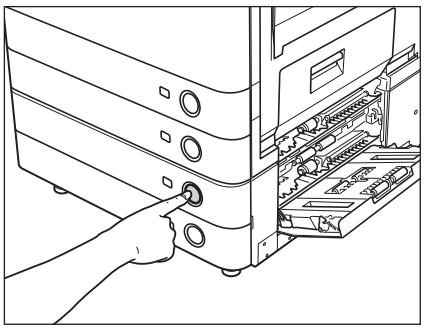

4 **Grip the handle, and pull out the paper drawer until it stops.**

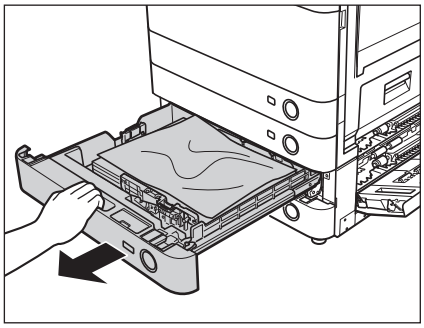

5 **Remove any jammed paper.**

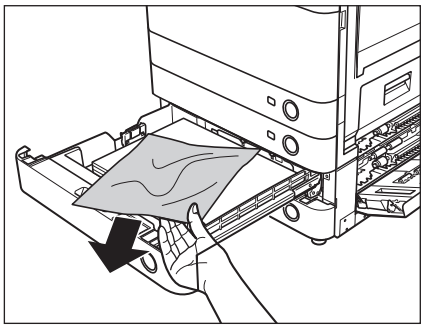

6 **Gently push the paper drawer back into the machine until it clicks into place in the closed position.**

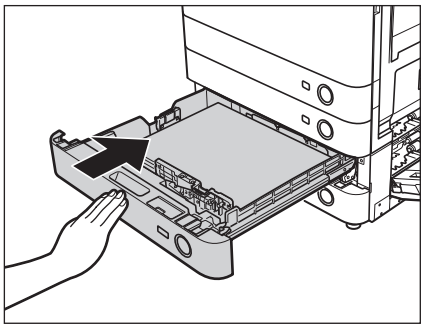

CAUTION

When returning the paper drawer to its original position, be careful not to get your fingers caught, as this may result in personal injury.

7 Close the lower right cover of the cassette feeding unit.

If the Paper Deck Unit-B1 was moved away from the main unit, reconnect it to the main unit. For more information, see e-Manual > Optional Products.

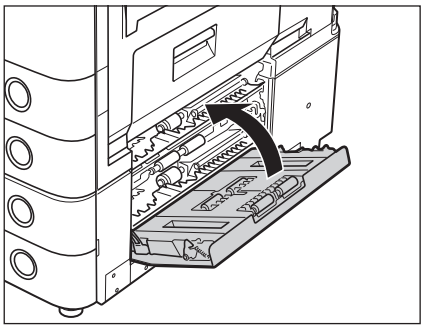

CAUTION

When closing the lower right cover of the cassette feeding unit, be careful not to get your fingers caught, as this may result in personal injury.

8 Follow the instructions on the touch panel display.

NOTE

The screen indicating the location of the paper jam repeatedly appears on the touch panel display until the paper jam is entirely cleared. For more information, see "Screens Indicating the Locations of Paper Jams," on p. 2-3.

Paper Deck Unit-B1 (Optional)

If a paper jam occurs in the Paper Deck Unit-B1, a screen prompting you to remove the jammed paper appears on the touch panel display. Check the location of the paper jam, and follow the procedure described below, and the procedure that appears on the touch panel display, to remove the jammed paper.

WARNING

There are some areas inside the machine which are subject to high-voltages. When removing jammed paper or when inspecting the inside of the machine, do not allow necklaces, bracelets, or other metal objects to touch the inside of the machine, as this may result in burns or electrical shock.

CAUTION

When removing jammed paper, take care not to cut your hands on the edges of the paper.

1 Press the release button, and move the paper deck unit away from the main unit.

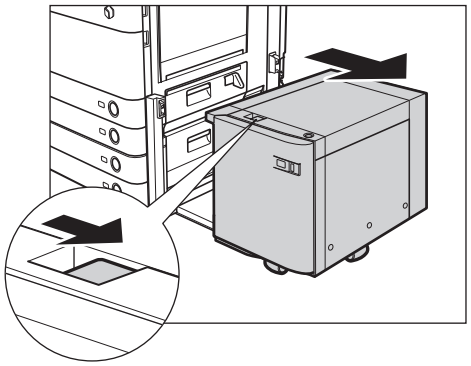

2 Pull down the green lever on the side of the paper deck that attaches to the main unit, and remove any jammed paper from the feeding area.

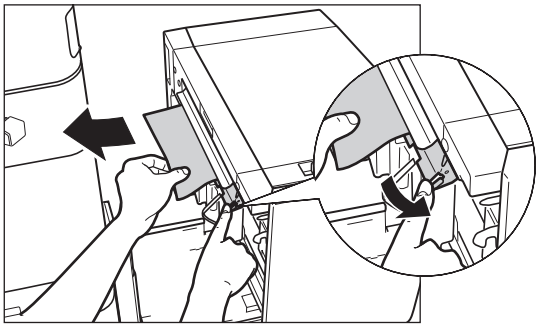

Paper can also be jammed in the feeding slot on the side of the main unit. Remove any jammed paper from the feeding slot.

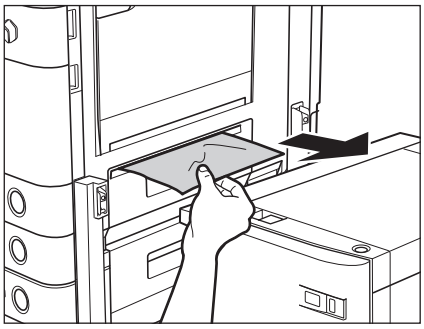

3 Reconnect the paper deck unit to the main unit.

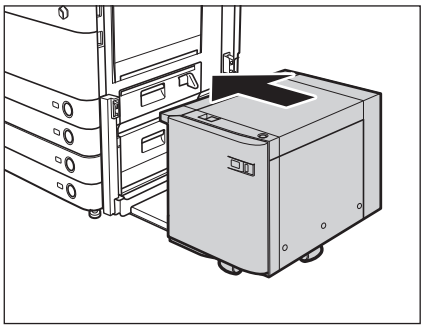

If the screen indicating the paper jam is no longer displayed after reconnecting the paper deck unit to the main unit, proceed to step 7.

CAUTION

When reconnecting the paper deck unit to the main unit, be careful not to get your fingers caught, as this may result in personal injury.

4 Press the open button to open the paper deck unit.

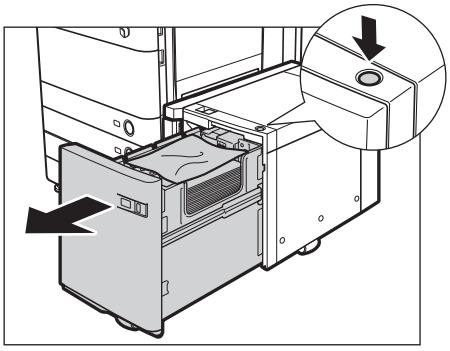

The inside lifter descends automatically.

IMPORTANT

If the machine is in the Sleep mode (the touch panel is not displayed, and only the main power indicator is lit), you may not be able to open the paper deck unit. In this case, press the control panel power switch to reactivate the machine, and then press the open button on the paper deck unit.

5 Remove any jammed paper.

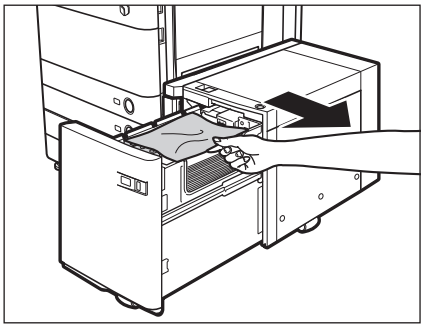

Look carefully, as jammed paper may be difficult to see.

6 Close the paper deck unit.

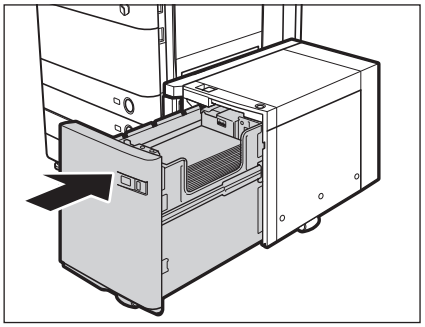

CAUTION

When closing the paper deck unit, be careful not to get your fingers caught, as this may result in personal injury.

7 Follow the instructions on the touch panel display.

NOTE

The screen indicating the location of the paper jam repeatedly appears on the touch panel display until the paper jam is entirely cleared. For more information, see "Screens Indicating the Locations of Paper Jams," on p. 2-3.

Feeder (Optional)

If a paper jam occurs in the Feeder, a screen prompting you to remove the jammed paper appears on the touch panel display. Check the location of the paper jam, and follow the procedure described below, and the procedure that appears on the touch panel display, to remove the jammed paper.

WARNING

There are some areas inside the machine which are subject to high-voltages. When removing jammed paper or when inspecting the inside of the machine, do not allow necklaces, bracelets, or other metal objects to touch the inside of the machine, as this may result in burns or electrical shock.

CAUTION

When removing jammed originals, take care not to cut your hands on the edges of the originals.

1 Remove originals from the original supply tray.

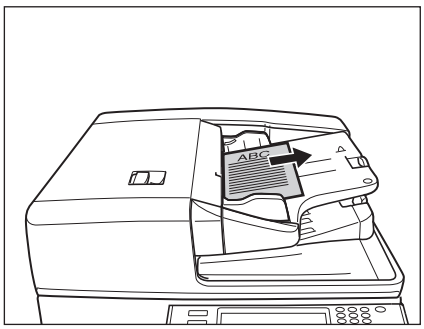

Duplex Color Image Reader Unit-B1

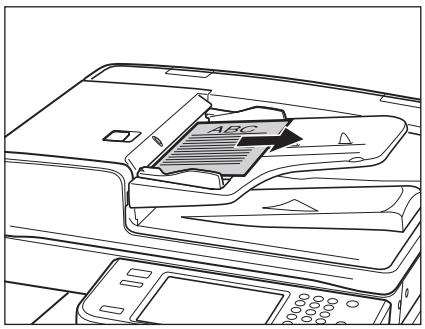

Color Image Reader Unit-B1

2 Pull the lever, and open the feeder cover.

Duplex Color Image Reader Unit-B1

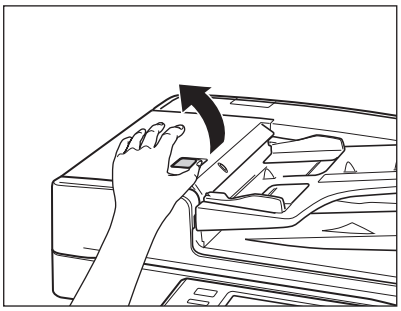

Color Image Reader Unit-B1

3 Remove any jammed originals.

If there is difficulty in removing jammed paper, do not try to remove it forcibly, and proceed to step 4.

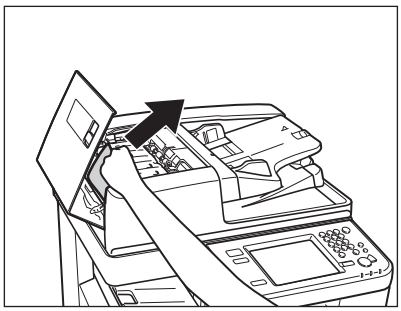

Duplex Color Image Reader Unit-B1

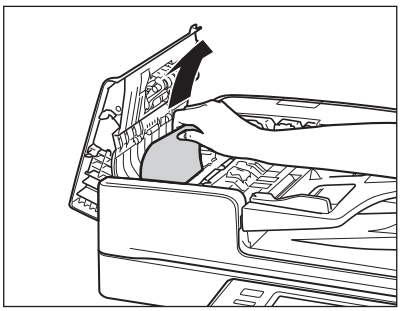

Color Image Reader Unit-B1

4 Open the inner cover, holding it by its front tab.

Duplex Color Image Reader Unit-B1

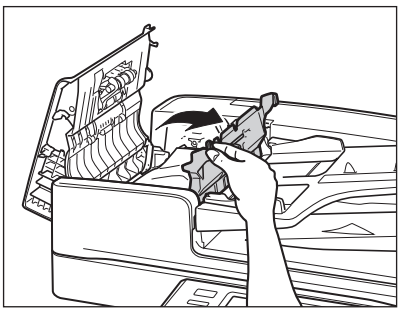

Color Image Reader Unit-B1

5 Turn the green feed dial, and remove any jammed originals.

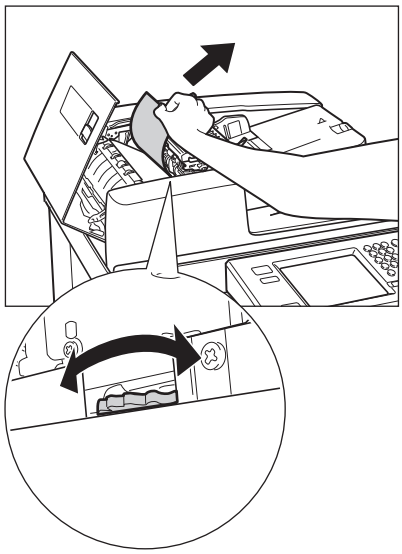

Duplex Color Image Reader Unit-B1

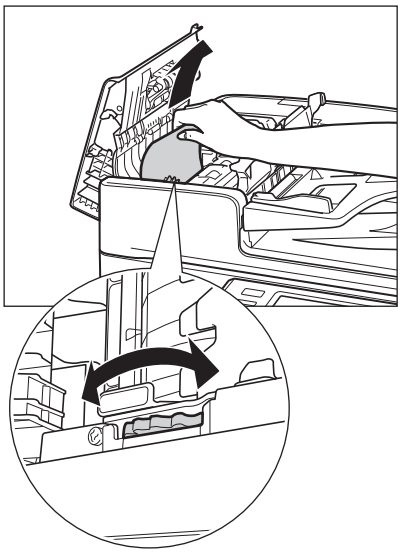

Color Image Reader Unit-B1

6 Close the inner cover.

Duplex Color Image Reader Unit-B1

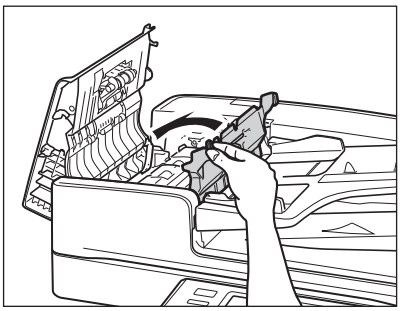

Color Image Reader Unit-B1

CAUTION

When closing the inner cover, be careful not to get your fingers caught, as this may result in personal injury.

7 Close the feeder cover.

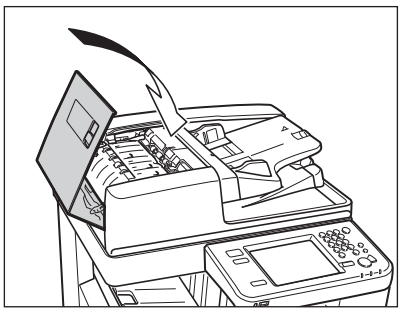

Duplex Color Image Reader Unit-B1

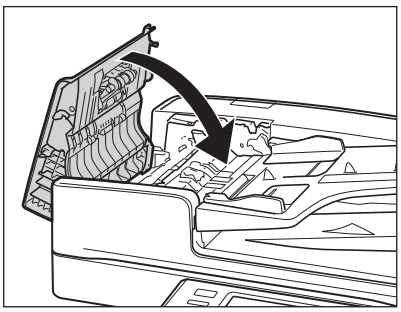

Color Image Reader Unit-B1

CAUTION

When closing the feeder cover, be careful not to get your fingers caught, as this may result in personal injury.

8 Lift the feeder, and remove any jammed originals.

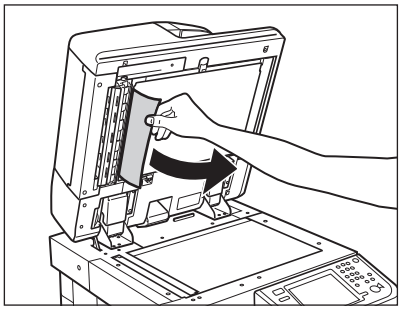

Duplex Color Image Reader Unit-B1

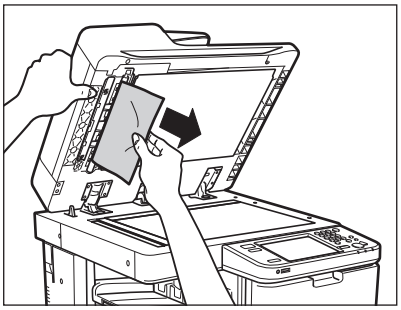

Color Image Reader Unit-B1

9 Close the feeder.

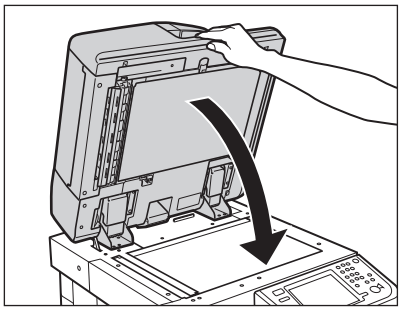

Duplex Color Image Reader Unit-B1

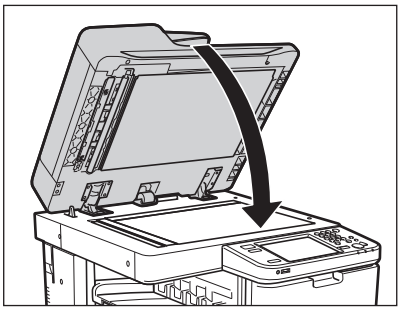

Color Image Reader Unit-B1

CAUTION

- **When closing the feeder, be careful not to get your fingers caught, as this may result in personal injury.**
- **Be aware that the light emitted from the platen glass may be very bright when closing the feeder.**

10 Follow the instructions on the touch panel display.

NOTE

The screen indicating the location of the paper jam repeatedly appears on the touch panel display until the paper jam is entirely cleared. For more information, see "Screens Indicating the Locations of Paper Jams," on p. 2-3.

Inner Finisher-A1 (Optional)

If a paper jam occurs in the Inner Finisher-A1, a screen prompting you to remove the jammed paper appears on the touch panel display. Check the location of the paper jam, and follow the procedure described below, and the procedure that appears on the touch panel display, to remove the jammed paper.

WARNING

There are some areas inside the machine which are subject to high-voltages. When removing jammed paper or when inspecting the inside of the machine, do not allow necklaces, bracelets, or other metal objects to touch the inside of the machine, as this may result in burns or electrical shock.

CAUTION

- **When removing jammed paper, take care not to cut your hands on the edges of the paper.**
- **When removing paper which has become jammed inside the machine, take care not to cut your hands or injure yourself on the inside of the machine. If you cannot remove the paper, contact your local authorized Canon dealer.**
- **When removing paper which has become jammed inside the machine, take care not to allow the toner on the jammed paper to come into contact with your hands or clothing, as this will dirty your hands or clothing. If they become dirty, wash them immediately with cold water. Washing them with warm water will set the toner, and make it impossible to remove the toner stains.**
- **When removing paper which has become jammed inside the machine, remove the jammed paper gently to prevent the toner on the paper from scattering and getting into your eyes or mouth. If the toner gets into your eyes or mouth, wash them immediately with cold water and immediately consult a physician.**

1 Grip the handle, and open the lower right and upper right covers of the machine.

If the Paper Deck Unit-B1 is attached to the main unit, move the paper deck away from the main unit before proceeding with this procedure. For more information, see e-Manual > Optional Products.

If the Copy Tray-J1 is attached to the main unit, remove all output paper from the tray. For more information, see e-Manual > Optional Products.

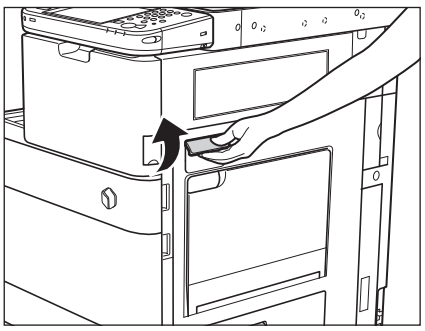

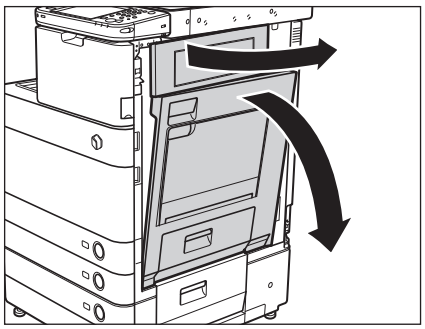

2 Pull out the paper output unit.

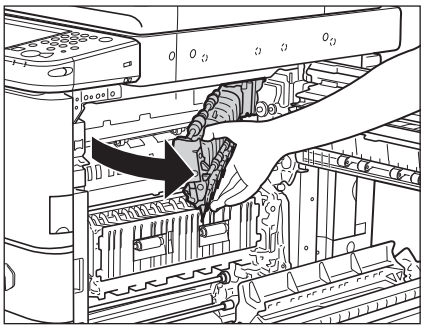

3 Remove any jammed paper inside the machine.

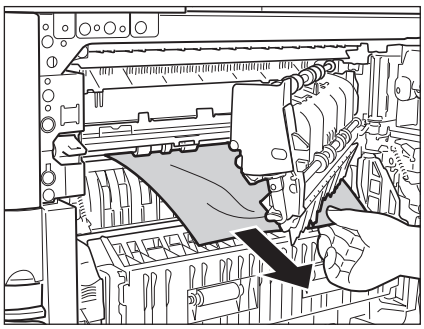

4 Pull down the inner guide, and remove any jammed paper.

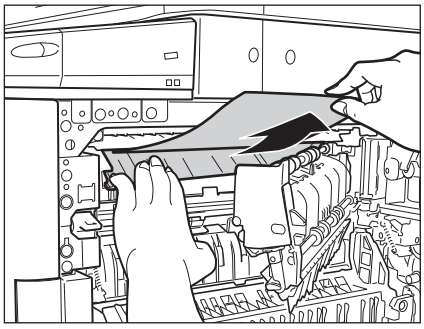

5 Remove any jammed paper protruding from the output tray.

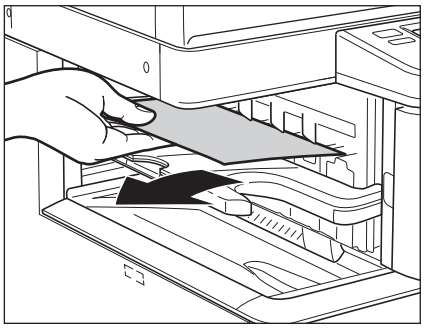

IMPORTANT

If a paper jam occurs when you are printing in the Staple mode, do not remove the output sheets that are waiting to be stapled. (Printing and stapling resume after you clear the paper jam.)

6 Push the paper output unit back into its original position.

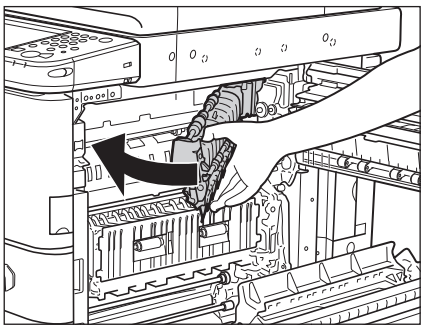

CAUTION

When pushing the paper output unit back into its original position, be careful not to get your fingers caught, as this may result in personal injury.

7 Gently close the upper right cover and then close the lower right cover until it clicks into place in the closed position.

If the Paper Deck Unit-B1 was moved away from the main unit, reconnect it to the main unit. For more information, see e-Manual > Optional Products.

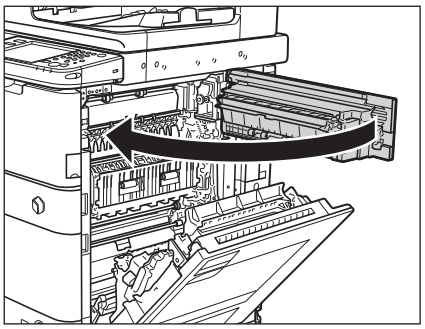

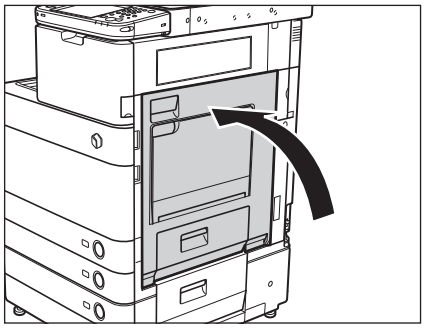

CAUTION

When closing the upper and lower right covers of the main unit, be careful not to get your fingers caught, as this may result in personal injury.

8 Follow the instructions on the touch panel display.

NOTE

The screen indicating the location of the paper jam repeatedly appears on the touch panel display until the paper jam is entirely cleared. For more information, see "Screens Indicating the Locations of Paper Jams," on p. 2-3.

Inside the Top Cover of the Staple Finisher-C1/Booklet Finisher-C1 (Optional)

If a paper jam occurs inside the top cover of the Staple Finisher-C1 or Booklet Finisher-C1, a screen prompting you to remove the jammed paper appears on the touch panel display. Check the location of the paper jam, and follow the procedure described below, and the procedure that appears on the touch panel display, to remove the jammed paper.

WARNING

There are some areas inside the machine which are subject to high-voltages. When removing jammed paper or when inspecting the inside of the machine, do not allow necklaces, bracelets, or other metal objects to touch the inside of the machine, as this may result in burns or electrical shock.

CAUTION

- **When removing jammed paper, take care not to cut your hands on the edges of the paper.**
- **When removing paper which has become jammed inside the machine, take care not to cut your hands or injure yourself on the inside of the machine. If you cannot remove the paper, contact your local authorized Canon dealer.**
- **When removing paper which has become jammed inside the machine, take care not to allow the toner on the jammed paper to come into contact with your hands or clothing, as this will dirty your hands or clothing. If they become dirty, wash them immediately with cold water. Washing them with warm water will set the toner, and make it impossible to remove the toner stains.**
- **When removing paper which has become jammed inside the machine, remove the jammed paper gently to prevent the toner on the paper from scattering and getting into your eyes or mouth. If the toner gets into your eyes or mouth, wash them immediately with cold water and immediately consult a physician.**

1 Open the output slot on the outside of the finisher, and remove any jammed paper that is visible.

If you cannot see any jammed paper, check if any jammed paper is stuck inside the output area of the finisher.

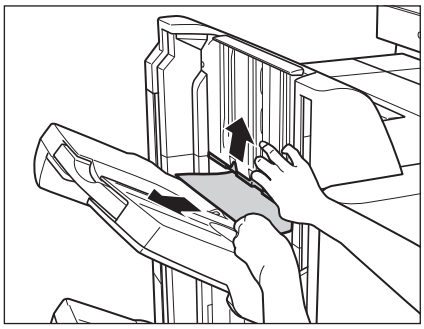

IMPORTANT

If a paper jam occurs when you are printing in the Staple mode, do not remove the output sheets that are waiting to be stapled. (Printing and stapling resume after you clear the paper jam.)

NOTE

When opening the output slot, lift the area indicated by the label on the output slot.

2 Open the top cover of the finisher, and remove any jammed paper.

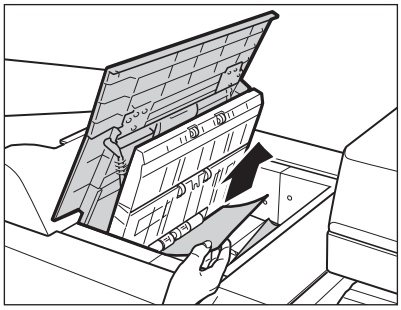

Booklet Finisher-C1

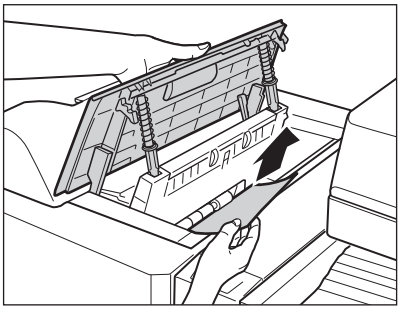

Staple Finisher-C1

3 Close the top cover of the finisher.

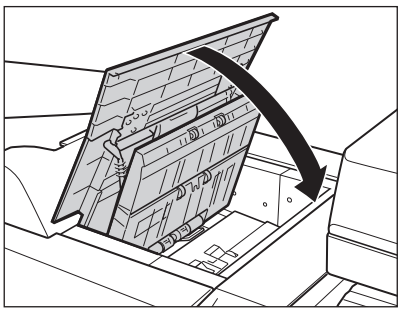

Booklet Finisher-C1

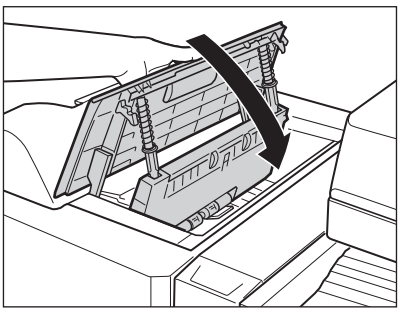

Staple Finisher-C1

CAUTION

When closing the top cover of the finisher, be careful not to get your fingers caught, as this may result in personal injury.

4 Follow the instructions on the touch panel display.

NOTE

The screen indicating the location of the paper jam repeatedly appears on the touch panel display until the paper jam is entirely cleared. For more information, see "Screens Indicating the Locations of Paper Jams," on p. 2-3.

Inside the Buffer Pass Unit-G1 of the Staple Finisher-C1/Booklet Finisher-C1 (Optional)

If a paper jam occurs inside the buffer pass unit of the Staple Finisher-C1 or Booklet Finisher-C1, a screen prompting you to remove the jammed paper appears on the touch panel display. Check the location of the paper jam, and follow the procedure described below, and the procedure that appears on the touch panel display, to remove the jammed paper.

WARNING

There are some areas inside the machine which are subject to high-voltages. When removing jammed paper or when inspecting the inside of the machine, do not allow necklaces, bracelets, or other metal objects to touch the inside of the machine, as this may result in burns or electrical shock.

CAUTION

- **When removing jammed paper, take care not to cut your hands on the edges of the paper.**
- **When removing paper which has become jammed inside the machine, take care not to cut your hands or injure yourself on the inside of the machine. If you cannot remove the paper, contact your local authorized Canon dealer.**
- **When removing paper which has become jammed inside the machine, take care not to allow the toner on the jammed paper to come into contact with your hands or clothing, as this will dirty your hands or clothing. If they become dirty, wash them immediately with cold water. Washing them with warm water will set the toner, and make it impossible to remove the toner stains.**
- **When removing paper which has become jammed inside the machine, remove the jammed paper gently to prevent the toner on the paper from scattering and getting into your eyes or mouth. If the toner gets into your eyes or mouth, wash them immediately with cold water and immediately consult a physician.**

1 Open the buffer pass unit, and remove any jammed paper.

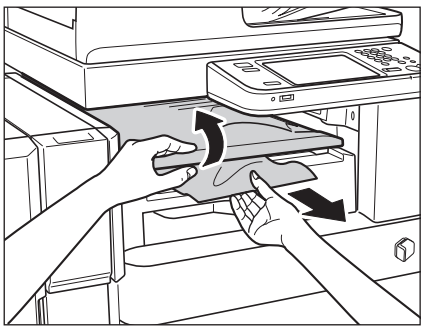

2 Close the buffer pass unit.

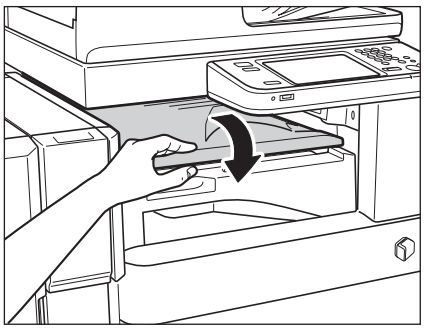

CAUTION

When closing the buffer pass unit, be careful not to get your fingers caught, as this may result in personal injury.

3 Follow the instructions on the touch panel display.

NOTE

The screen indicating the location of the paper jam repeatedly appears on the touch panel display until the paper jam is entirely cleared. For more information, see "Screens Indicating the Locations of Paper Jams," on p. 2-3.

Inside the Front Cover of the Booklet Finisher-C1 (Optional)

If a paper jam occurs inside the front cover of the Booklet Finisher-C1, a screen prompting you to remove the jammed paper appears on the touch panel display. Check the location of the paper jam, and follow the procedure described below, and the procedure that appears on the touch panel display, to remove the jammed paper.

WARNING

There are some areas inside the machine which are subject to high-voltages. When removing jammed paper or when inspecting the inside of the machine, do not allow necklaces, bracelets, or other metal objects to touch the inside of the machine, as this may result in burns or electrical shock.

CAUTION

- **When removing jammed paper, take care not to cut your hands on the edges of the paper.**
- **When removing paper which has become jammed inside the machine, take care not to cut your hands or injure yourself on the inside of the machine. If you cannot remove the paper, contact your local authorized Canon dealer.**
- **When removing paper which has become jammed inside the machine, take care not to allow the toner on the jammed paper to come into contact with your hands or clothing, as this will dirty your hands or clothing. If they become dirty, wash them immediately with cold water. Washing them with warm water will set the toner, and make it impossible to remove the toner stains.**
- **When removing paper which has become jammed inside the machine, remove the jammed paper gently to prevent the toner on the paper from scattering and getting into your eyes or mouth. If the toner gets into your eyes or mouth, wash them immediately with cold water and immediately consult a physician.**

1 Open the front cover of the finisher.

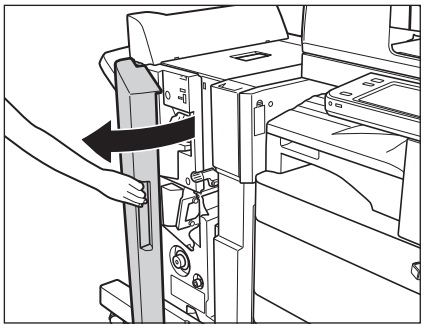

2 Tilt the upper delivery guide to the right, and remove any jammed paper.

Springs are attached to the upper delivery guide, so it returns to its original position when released.

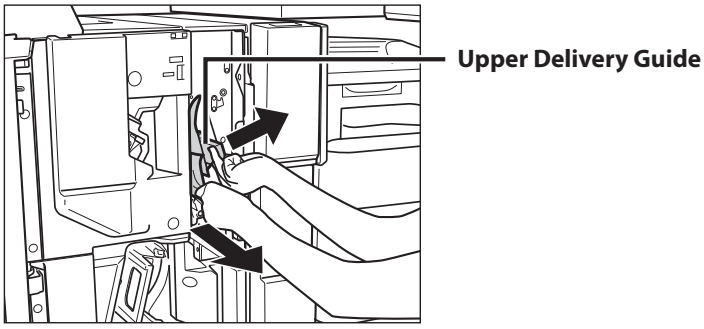

CAUTION

When releasing the upper delivery guide, be careful not to get your fingers caught, as this may result in personal injury.

3 Tilt the lower delivery guide to the right, and remove any jammed paper.

Turn the lever on the lower delivery guide to the right until it stops, and then tilt the lower delivery guide to the right.

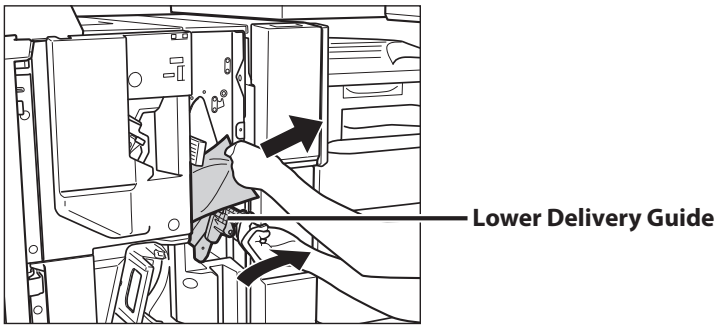

4 Return the lower delivery guide to its original position.

CAUTION

When returning the lower delivery guide to its original position, be careful not to get your fingers caught, as this may result in personal injury.

5 **Close the front cover of the finisher.**

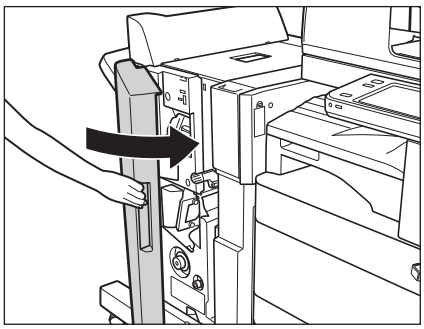

CAUTION

When closing the front cover of the finisher, be careful not to get your fingers caught, as this may result in personal injury.

6 **Follow the instructions on the touch panel display.**

NOTE

The screen indicating the location of the paper jam repeatedly appears on the touch panel display until the paper jam is entirely cleared. For more information, see "Screens Indicating the Locations of Paper Jams," on p. 2-3.

Saddle Stitcher Unit (Optional)

If a paper jam occurs inside the saddle stitcher unit of the Booklet Finisher-C1, a screen prompting you to remove the jammed paper appears on the touch panel display. Check the location of the paper jam, and follow the procedure described below, and the procedure that appears on the touch panel display, to remove the jammed paper.

WARNING

There are some areas inside the machine which are subject to high-voltages. When removing jammed paper or when inspecting the inside of the machine, do not allow necklaces, bracelets, or other metal objects to touch the inside of the machine, as this may result in burns or electrical shock.

CAUTION

- **When removing jammed paper, take care not to cut your hands on the edges of the paper.**
- **When removing paper which has become jammed inside the machine, take care not to cut your hands or injure yourself on the inside of the machine. If you cannot remove the paper, contact your local authorized Canon dealer.**
- **When removing paper which has become jammed inside the machine, take care not to allow the toner on the jammed paper to come into contact with your hands or clothing, as this will dirty your hands or clothing. If they become dirty, wash them immediately with cold water. Washing them with warm water will set the toner, and make it impossible to remove the toner stains.**
- **When removing paper which has become jammed inside the machine, remove the jammed paper gently to prevent the toner on the paper from scattering and getting into your eyes or mouth. If the toner gets into your eyes or mouth, wash them immediately with cold water and immediately consult a physician.**

1 **Open the front cover of the finisher.**

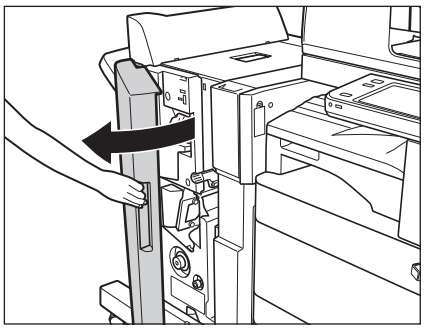

2 **Turn the knob on the right in the direction of the arrow (counterclockwise).**

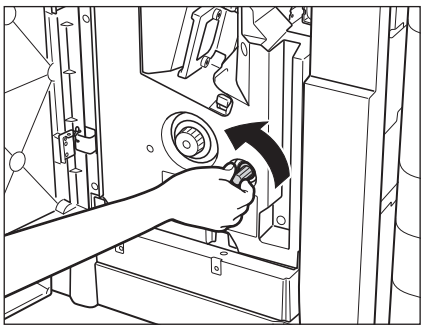

3 **While pushing in the knob on the left, turn it in the direction of the arrow (clockwise).**

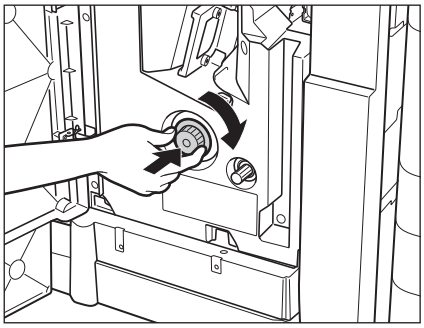

4 **Remove any jammed paper protruding from the output part.**

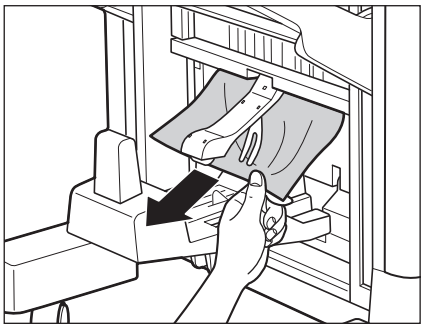

5 **Tilt the lower delivery guide to the right, and remove any jammed paper.**

Turn the lever on the lower delivery guide to the right until it stops, and then tilt the lower delivery guide to the right.

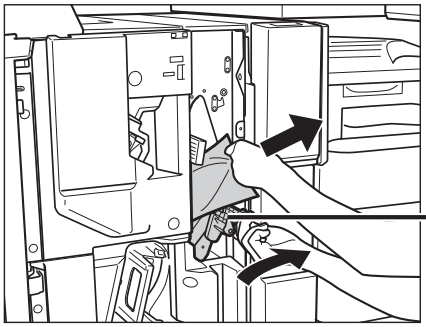

6 Return the lower delivery guide to its original position.

CAUTION

When returning the lower delivery guide to its original position, be careful not to get your fingers caught, as this may result in personal injury.

7 Close the front cover of the finisher.

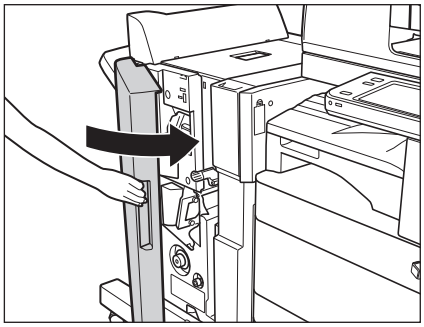

CAUTION

When closing the front cover of the finisher, be careful not to get your fingers caught, as this may result in personal injury.

8 Follow the instructions on the touch panel display.

NOTE

The screen indicating the location of the paper jam repeatedly appears on the touch panel display until the paper jam is entirely cleared. For more information, see "Screens Indicating the Locations of Paper Jams," on p. 2-3.

Puncher (Optional)

If a paper jam occurs inside the Puncher, a screen prompting you to remove the jammed paper appears on the touch panel display. Check the location of the paper jam, and follow the procedure described below, and the procedure that appears on the touch panel display, to remove the jammed paper.

1 **Open the front cover of the punch waste tray.**

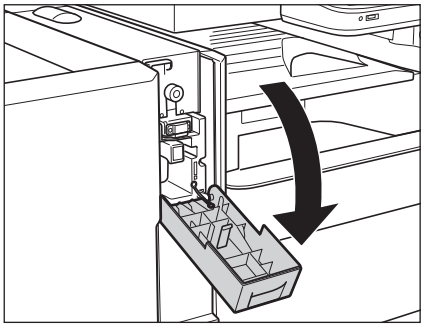

2 **Align the pointed notch on the knob within the shaded region ( ).**

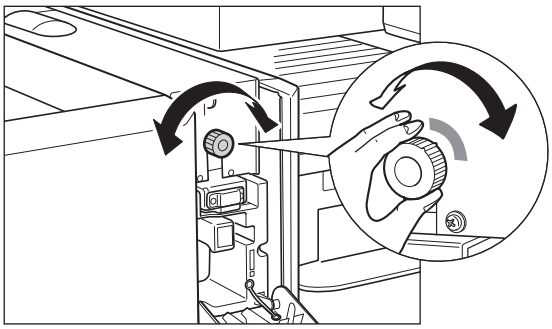

3 **Open the top cover of the puncher unit.**

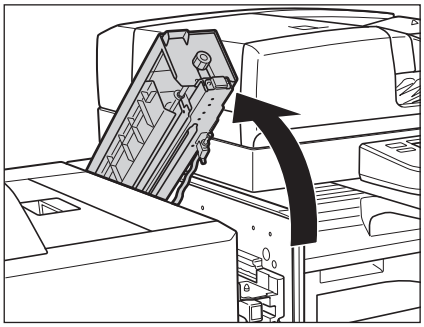

4 **Remove any jammed paper.**

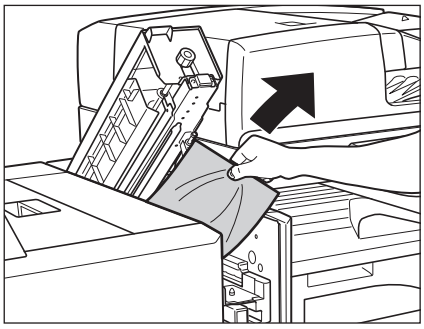

5 Open the top cover of the finisher, and remove any jammed paper.

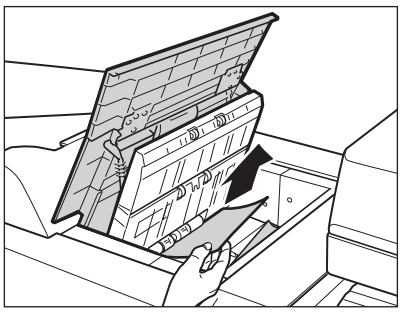

Booklet Finisher-C1

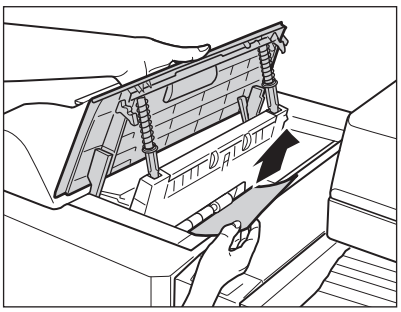

Staple Finisher-C1

6 Close the top cover of the finisher.

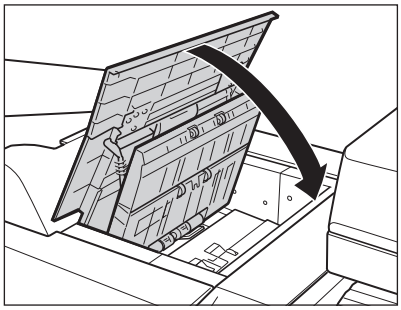

Booklet Finisher-C1

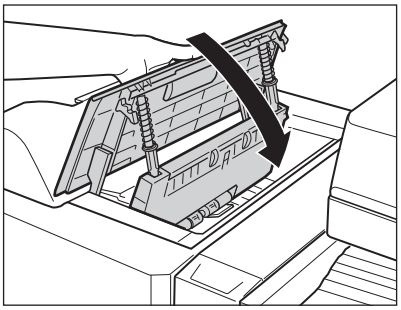

Staple Finisher-C1

CAUTION

When closing the top cover of the finisher, be careful not to get your fingers caught, as this may result in personal injury.

7 Close the top cover of the puncher unit.

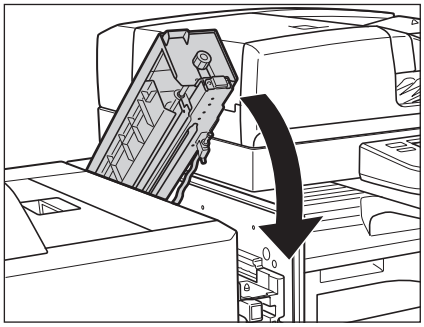

CAUTION

When closing the top cover of the puncher unit, be careful not to get your fingers caught, as this may result in personal injury.

8 **Close the front cover of the punch waste tray.**

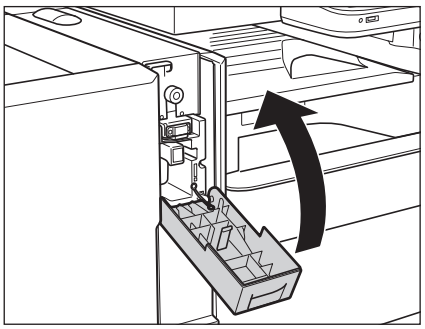

CAUTION

When closing the front cover of the punch waste tray, be careful not to get your fingers caught, as this may result in personal injury.

9 **Follow the instructions on the touch panel display.**

NOTE

The screen indicating the location of the paper jam repeatedly appears on the touch panel display until the paper jam is entirely cleared. For more information, see "Screens Indicating the Locations of Paper Jams," on p. 2-3.

Inner 2Way Tray-F1 (Optional)

If a paper jam occurs inside the Inner 2Way Tray-F1, a screen prompting you to remove the jammed paper appears on the touch panel display. Check the location of the paper jam, and follow the procedure described below, and the procedure that appears on the touch panel display, to remove the jammed paper.

WARNING

There are some areas inside the machine which are subject to high-voltages. When removing jammed paper or when inspecting the inside of the machine, do not allow necklaces, bracelets, or other metal objects to touch the inside of the machine, as this may result in burns or electrical shock.

CAUTION

- **When removing jammed paper, take care not to cut your hands on the edges of the paper.**
- **When removing paper which has become jammed inside the machine, take care not to cut your hands or injure yourself on the inside of the machine. If you cannot remove the paper, contact your local authorized Canon dealer.**
- **When removing paper which has become jammed inside the machine, take care not to allow the toner on the jammed paper to come into contact with your hands or clothing, as this will dirty your hands or clothing. If they become dirty, wash them immediately with cold water. Washing them with warm water will set the toner, and make it impossible to remove the toner stains.**
- **When removing paper which has become jammed inside the machine, remove the jammed paper gently to prevent the toner on the paper from scattering and getting into your eyes or mouth. If the toner gets into your eyes or mouth, wash them immediately with cold water and immediately consult a physician.**

1 Grip the handle, and open the lower right and upper right covers of the machine.

If the Paper Deck Unit-B1 is attached to the main unit, move the paper deck away from the main unit before proceeding with this procedure. For more information, see e-Manual > Optional Products.

If the Copy Tray-J1 is attached to the main unit, remove all output paper from the tray. For more information, see e-Manual > Optional Products.

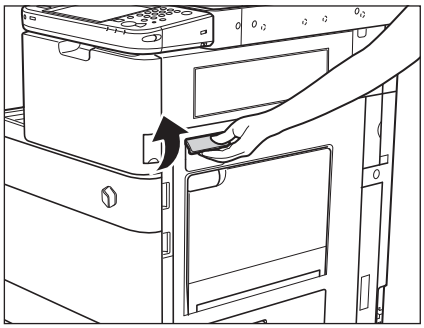

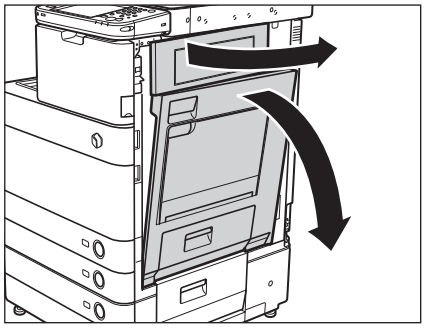

2 Remove any jammed paper.

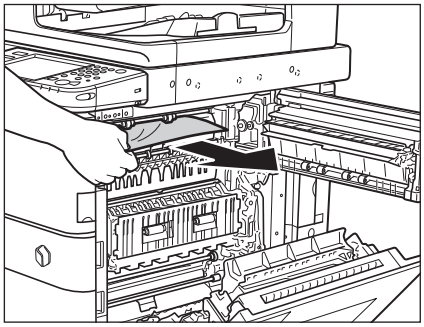

3 Gently close the upper right cover and then close the lower right cover until it clicks into place in the closed position.

If the Paper Deck Unit-B1 was moved away from the main unit, reconnect it to the main unit. For more information, see e-Manual > Optional Products.

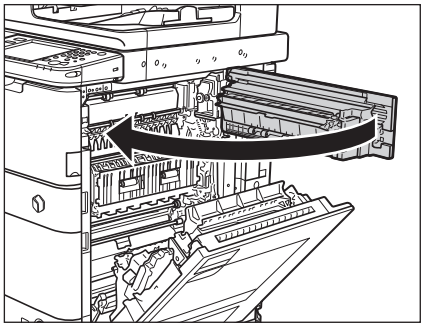

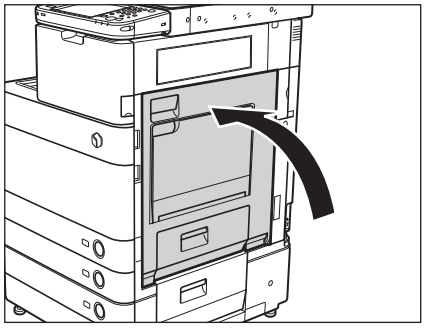

CAUTION

When closing the upper and lower right covers of the main unit, be careful not to get your fingers caught, as this may result in personal injury.

4 Follow the instructions on the touch panel display.

NOTE

The screen indicating the location of the paper jam repeatedly appears on the touch panel display until the paper jam is entirely cleared. For more information, see "Screens Indicating the Locations of Paper Jams," on p. 2-3.

Copy Tray-J1 (Optional)

If a paper jam occurs inside the Copy Tray-J1, a screen prompting you to remove the jammed paper appears on the touch panel display. Check the location of the paper jam, and follow the procedure described below, and the procedure that appears on the touch panel display, to remove the jammed paper.

WARNING

There are some areas inside the machine which are subject to high-voltages. When removing jammed paper or when inspecting the inside of the machine, do not allow necklaces, bracelets, or other metal objects to touch the inside of the machine, as this may result in burns or electrical shock.

CAUTION

- **When removing jammed paper, take care not to cut your hands on the edges of the paper.**
- **When removing paper which has become jammed inside the machine, take care not to cut your hands or injure yourself on the inside of the machine. If you cannot remove the paper, contact your local authorized Canon dealer.**
- **When removing paper which has become jammed inside the machine, take care not to allow the toner on the jammed paper to come into contact with your hands or clothing, as this will dirty your hands or clothing. If they become dirty, wash them immediately with cold water. Washing them with warm water will set the toner, and make it impossible to remove the toner stains.**
- **When removing paper which has become jammed inside the machine, remove the jammed paper gently to prevent the toner on the paper from scattering and getting into your eyes or mouth. If the toner gets into your eyes or mouth, wash them immediately with cold water and immediately consult a physician.**

1 Grip the handle, and open the lower right and upper right covers of the machine.

If the Paper Deck Unit-B1 is attached to the main unit, move the paper deck away from the main unit before proceeding with this procedure. For more information, see e-Manual > Optional Products.

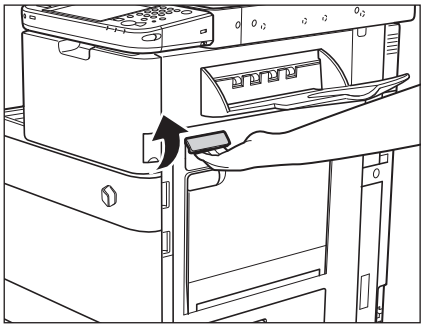

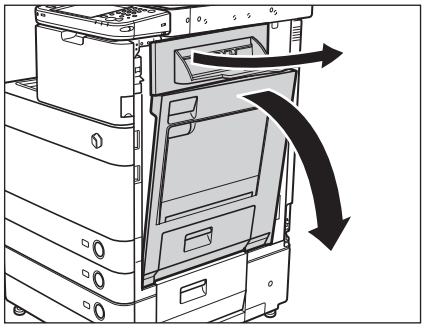

2 Remove any jammed paper protruding from the inside slot of the copy tray.

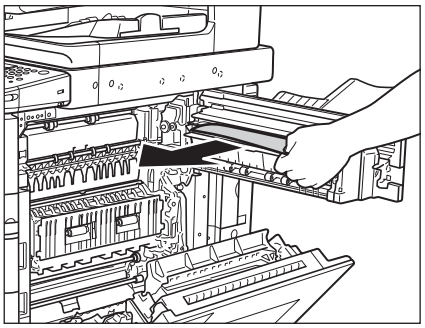

3 Gently close the upper right cover and then close the lower right cover until it clicks into place in the closed position.

If the Paper Deck Unit-B1 was moved away from the main unit, reconnect it to the main unit. For more information, see e-Manual > Optional Products.

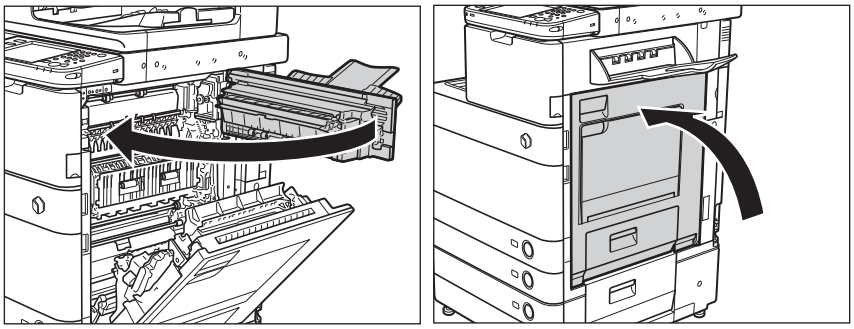

CAUTION

When closing the upper and lower right covers of the main unit, be careful not to get your fingers caught, as this may result in personal injury.

4 Follow the instructions on the touch panel display.

NOTE

The screen indicating the location of the paper jam repeatedly appears on the touch panel display until the paper jam is entirely cleared. For more information, see "Screens Indicating the Locations of Paper Jams," on p. 2-3.

Clearing Staple Jams

If a staple jam occurs, follow the procedure described below to remove the jammed staples.

Inner Finisher-A1 (Optional)

If a staple jam occurs in the Inner Finisher-A1, a screen prompting you to remove the jammed staples appears on the touch panel display. Check the location of the staple jam, and follow the procedure described below, and the procedure that appears on the touch panel display, to remove any jammed staples.

IMPORTANT

Make sure to close all covers and paper drawers of the machine before clearing any staple jams.

1 **Remove the jammed paper in the finisher's output tray and the paper that is still waiting to be stapled.**

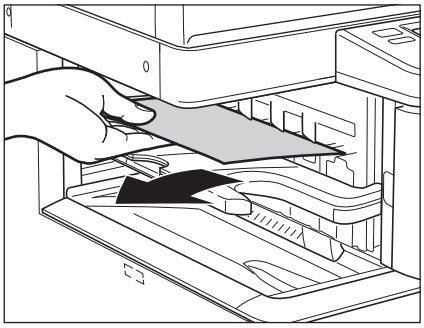

2 **Open the front cover of the finisher.**

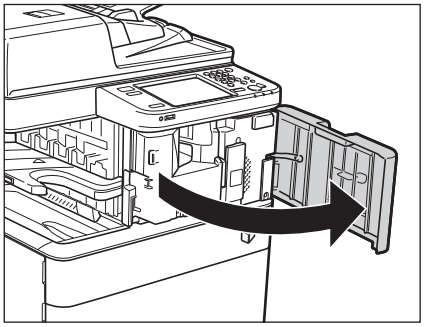

3 **Pull out the staple case, holding it by the green tab.**

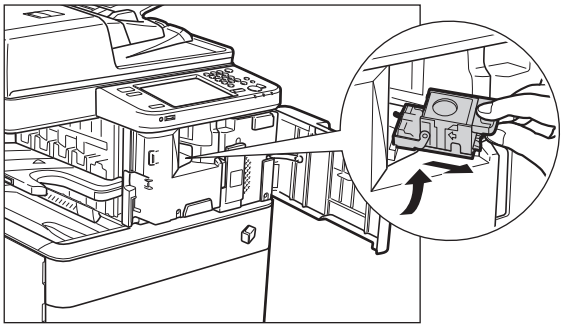

4 **Push down the tab on the staple case.**

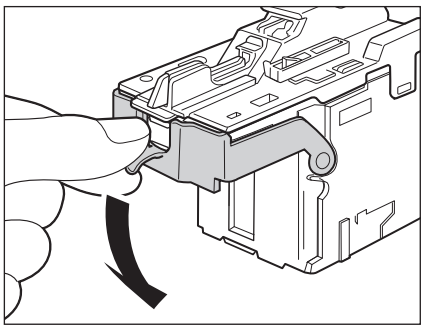

5 **Remove all of the staples that slide from the staple case.**

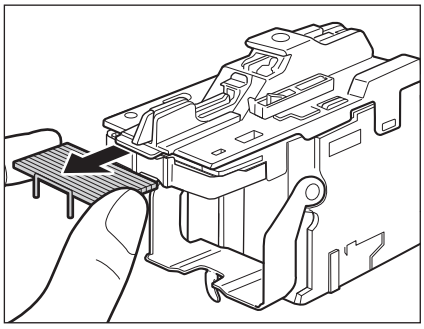

6 **Return the tab on the staple case to its original position.**

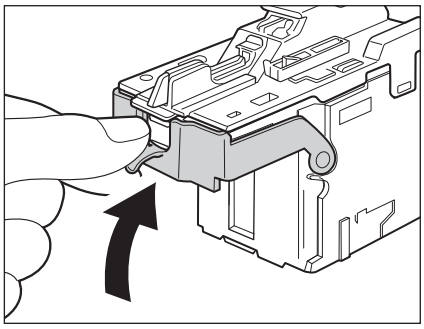

7 **Gently push the staple case back into the finisher until it is securely in place.**

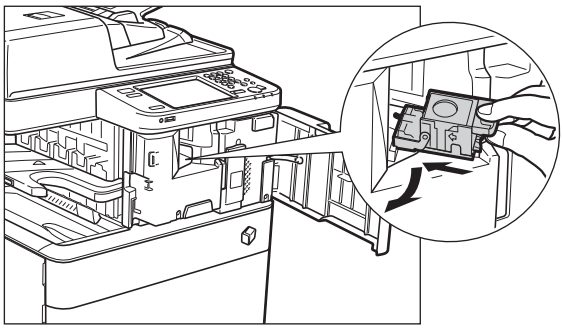

8 **Close the front cover of the finisher.**

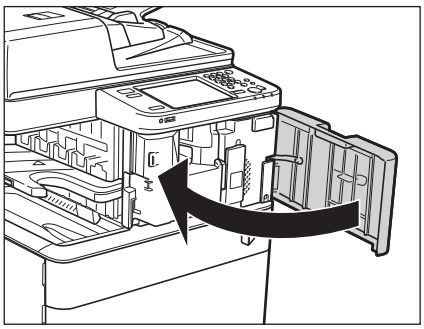

CAUTION

When closing the front cover of the finisher, be careful not to get your fingers caught, as this may result in personal injury.

NOTE

If there are no staples ready for stapling after the cover is closed, the stapler unit automatically performs a "dry" stapling operation to reposition the staples.

Staple Finisher-C1/Booklet Finisher-C1 (Optional)

If a staple jam occurs in the stapler unit of the Staple Finisher-C1 or Booklet Finisher-C1, a screen prompting you to remove the jammed staples appears on the touch panel display. Check the location of the staple jam, and follow the procedure described below, and the procedure that appears on the touch panel display, to remove any jammed staples.

IMPORTANT

Make sure to close all covers and drawers of the machine before clearing any staple jams.

1 **Open the front cover of the finisher.**

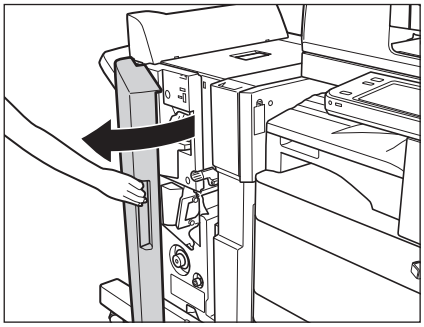

Booklet Finisher-C1

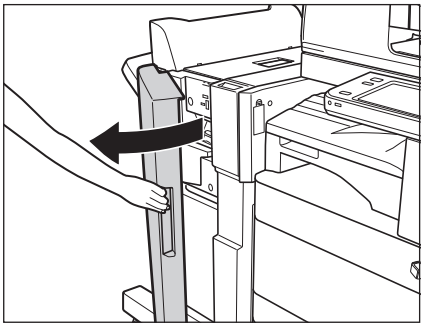

Staple Finisher-C1

2 **Lift and pull out the staple case from the stapler unit, holding it by the green tab.**

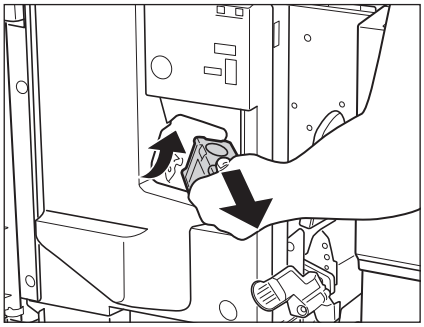

3 **Push down the tab on the staple case.**

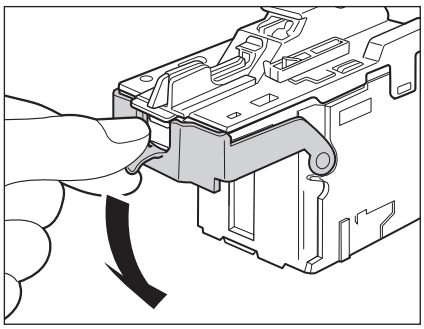

4 **Remove all of the staples that slide from the staple case.**

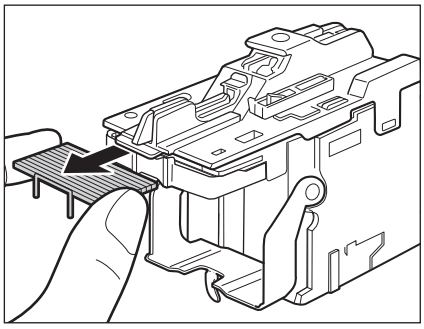

5 **Return the tab on the staple case to its original position.**

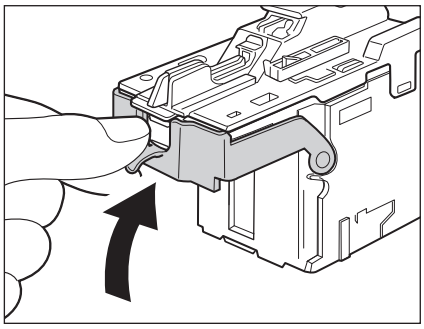

6 **Gently push the staple case back into the stapler unit until it is securely in place.**

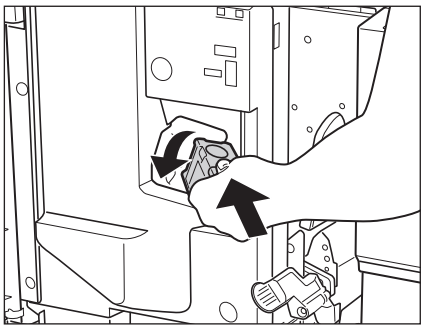

7 **Close the front cover of the finisher.**

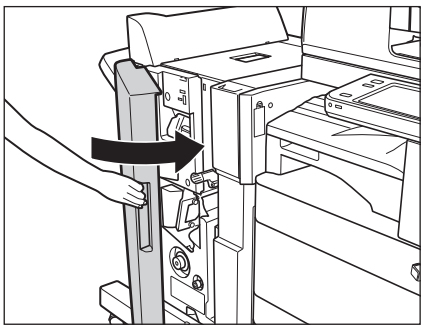

Booklet Finisher-C1

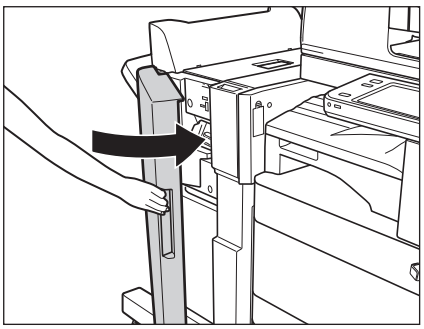

Staple Finisher-C1

CAUTION

When closing the front cover of the finisher, be careful not to get your fingers caught, as this may result in personal injury.

NOTE

If there are no staples ready for stapling after the cover is closed, the stapler unit automatically performs a "dry" stapling operation to reposition the staples.

Saddle Stitcher Unit (Optional)

If a staple jam occurs inside the saddle stitcher unit of the Booklet Finisher-C1, a screen prompting you to remove the jammed staples appears on the touch panel display. Check the location of the staple jam, and follow the procedure described below, and the procedure that appears on the touch panel display, to remove any jammed staples.

IMPORTANT

- If necessary, make sure to remove all of the paper in the Booklet tray before clearing a staple jam inside the saddle stitcher unit.
- Make sure to close all covers and drawers of the machine before clearing any staple jams.

1 **Open the front cover of the finisher.**

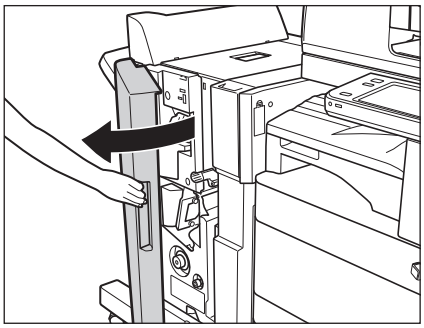

2 **Grip the saddle stitcher unit by its handle, and pull it out of the finisher until it stops.**

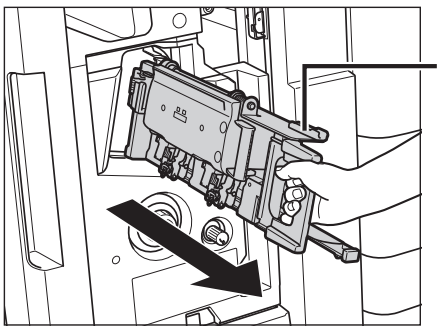

3 **Pull the stapler unit of the saddle stitcher unit towards you, and then push it up.**

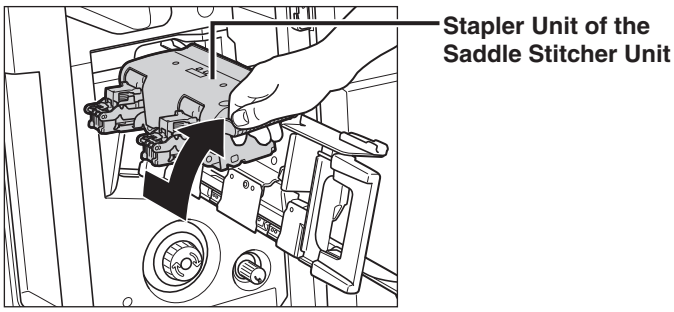

4 **Pull out the staple cartridge containing the jammed staples, holding it by its left and right sides.**

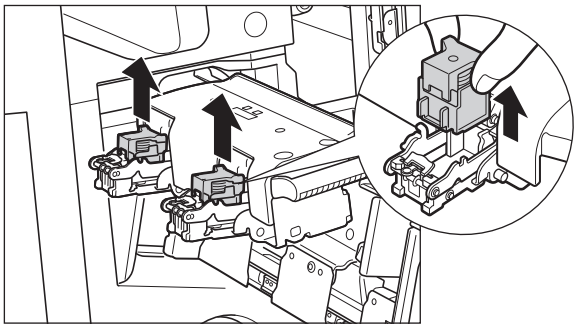

5 **On the staple case, push down Part A to unlock, and then push up Part B.**

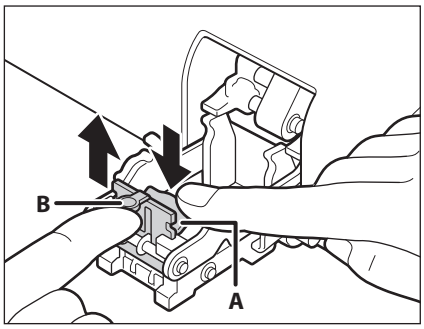

6 **Remove any jammed staples, and return Part B to its original position.**

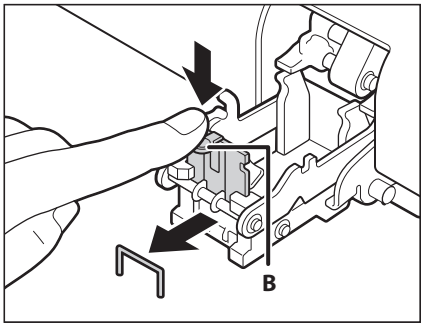

7 **Return the staple cartridge to its original position.**

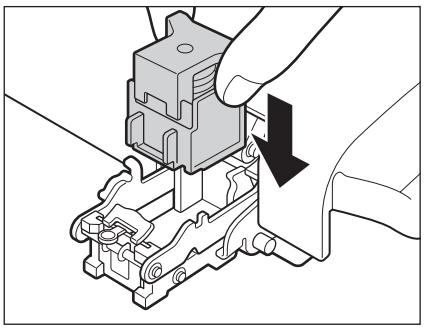

8 **Pull the stapler unit of the saddle stitcher unit towards you, and then push it down into its original position.**

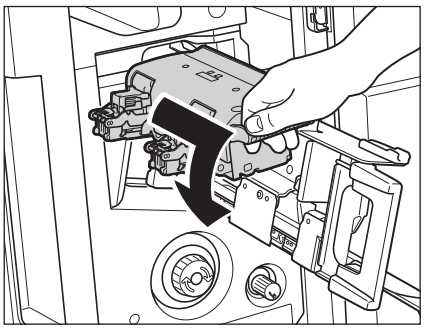

9 **Gently push the saddle stitcher unit back into its original position.**

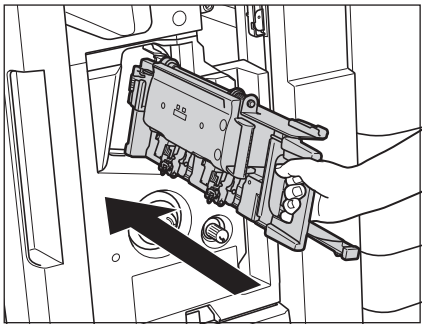

10 Close the front cover of the finisher.

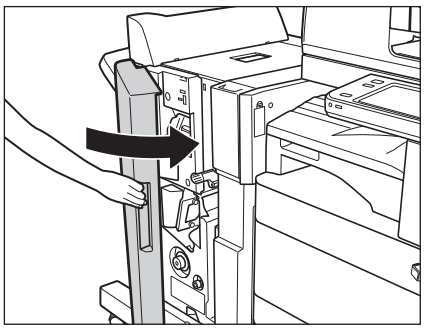

CAUTION

When closing the front cover of the finisher, be careful not to get your fingers caught, as this may result in personal injury.

IMPORTANT

When you have cleared the staple jam, be sure to manually reposition the staples in the saddle stitcher unit. (see e-Manual > Settings/Registration.)

List of Error Messages

This section explains the various messages that appear on the touch panel display, along with possible causes and remedies.

For explanations of messages that are not listed here, see e-Manual >Scan and Send, Using the Machine to Send/Receive a Fax, Network.

Self-Diagnostic Display

If the machine displays a self-diagnostic error message, follow the instructions on the touch panel display.

Self-diagnostic error messages appear on the touch panel display at the following times:

- When scanning or printing cannot be performed because of an operational error.
- When you need to make a decision or take some action during scanning, copying, or printing.
- When you need to make a decision or take some action while browsing the network.

The following is a list of self-diagnostic error messages, along with their possible causes and remedies.

Load paper.

Cause 1	The machine has run out of paper. No more prints can be made.
Remedy	Load paper. (See "Paper Drawers," on p. 1-2.)
Cause 2	The paper drawer is not correctly inserted.
Remedy	Insert the paper drawer as far as it will go. (See "Paper Drawers," on p. 1-2.)

The most proper A4 size is not available.

Cause 1	The optimum paper size selected by the Automatic Paper Selection mode is not available in the machine.
Remedy	Load the indicated paper size into the machine.
Cause 2	[Paper Drawer Auto Selection On/Off] is set to 'Off'.
Remedy 1	Manually specify the paper drawer.
Remedy 2	Set [Paper Drawer Auto Selection On/Off] to 'On' for the paper drawer in which the displayed paper size is loaded. (See e-Manual > Settings/Registration.)
Cause 3	A paper type not supported by automatic paper selection is loaded.
Remedy 1	Manually specify the paper drawer.
Remedy 2	Set [Consider Paper Type] in [Paper Drawer Auto Selection On/Off] to 'Off' when copying. (See e-Manual > Settings/Registration.)

Return the originals to their correct order, then press the [Start] key.

Cause	Scanning was stopped due to a problem with the feeder.
Remedy	Arrange the originals in page order with the first page on top. Place the originals back into the feeder's original supply tray, and press (Settings/Registration).

Return the originals to their correct order, then press the [Start] key. (The data size of the scanned original exceeded the limit. Settings will be automatically corrected and the originals will be scanned again.)

Cause	Scanning has stopped because the data size of the scanned original exceeds the maximum data size that the machine can handle.
Remedy	Try scanning the original again from the first page. If scanning is still not possible, reduce the Sharpness mode setting, and select [Text] for the original type.

Scanning was stopped because the data size of the scanned original exceeded the limit. Scanning may be possible if sharpness is reduced, and Original Type is set to Text.

Cause	Scanning has stopped because the data size of the scanned original exceeds the maximum data size that the machine can handle.
Remedy	Reduce the Sharpness mode settings, and select [Text] for the original type.

Remove the paper from the output tray.

Cause	Prints from the previous job remain in the output tray.
Remedy	Remove the prints remaining in the output tray. Printing automatically resumes.

Remove the paper from the booklet tray.

Cause	Prints from the previous job remain in the Booklet tray of the Booklet Finisher-C1.
Remedy	Remove the prints remaining in the Booklet tray. Printing automatically resumes.

Yellow toner is low. Replacement not yet needed.

Cause	Toner of the displayed colour is running low.
Remedy	Prepare the displayed colour's toner cartridge for replacement. (See "Replacing the Toner Cartridge," on p. 1-38.) (See "Replacing the Toner Cartridge," on p. 1-39.)

Replace toner cartridge. (Black)

Cause 1	Printing will soon not be possible because the toner of the displayed colour is running out.
Cause 2	Printing is not possible because toner of the displayed colour has run out.
Remedy	Replace the displayed colour's toner cartridge. (See "Replacing the Toner Cartridge," on p. 1-39.)

Replace toner cartridge. (Black copying is possible.)

Cause	Colour copying is not possible because toner of the displayed colour has run out.
Remedy	Replace the displayed colour's toner cartridge. (See "Replacing the Toner Cartridge," on p. 1-39.)

Replace toner cartridge. (Black printing is possible.)

Cause	Colour printing from the Mail Box and Fax/I-Fax Inbox is not possible because toner of the displayed colour has run out.
Remedy	Replace the displayed colour's toner cartridge. (See "Replacing the Toner Cartridge," on p. 1-39.)

Insert toner cartridge. (Cyan)

Cause	The toner cartridge of the displayed colour is not inserted properly.
Remedy	Make sure that the toner cartridge is inserted properly. (See "Replacing the Toner Cartridge," on p. 1-39.)

Prepare a new waste toner container and open the front cover.

Cause	Printing is not possible because the waste toner container is full.
Remedy	Replace the waste toner container. (See "Replacing the Waste Toner Container," on p. 1-44.)

Place the original on the platen glass.

Cause	The specified mode requires that the original be placed on the platen glass, but there is no original on the platen glass.
Remedy	Place the original on the platen glass.

Remove the original from the platen glass.

Cause	An original remains on the platen glass.
Remedy	Remove the original from the platen glass, and place the new original.

Remove the original from the feeder.

Cause	The machine cannot scan your original using the feeder. An original is placed in the feeder and on the platen glass.
Remedy	Remove the original from the feeder.

Original scanning area (thin glass strip) is dirty.

Cause	The feeder's scanning area is dirty.
Remedy	Clean the feeder's scanning area. (See "Manual Feeder Cleaning," on p. 1-48.)

Adjusting gradation. Wait a moment...

Cause	The machine is performing an automatic gradation adjustment.
Remedy	Wait for the machine to finish the automatic gradation adjustment. When the adjustment is complete, printing automatically resumes.

Preparing for color printing. Please wait.

Cause	The machine is performing an automatic adjustment.
Remedy	Please wait for a moment. Colour printing resumes automatically when the adjustment is finished.

Performing multiple jobs...

Cause	Multiple jobs such as print jobs or scan jobs are being executed while performing the scan operation.
Remedy	Wait for the machine to resume the scan operation.

Cleaning the drum... Wait a while...

Cause	The machine is in the process of cleaning the drum.
Remedy	Wait for the machine to finish cleaning the drum. When cleaning is complete, printing automatically resumes.

The Dept. ID or PIN is incorrect.

Cause	The Department ID and password you entered are not registered.
Remedy	Contact the system manager of your Department for the correct Department ID and password.

Load staples into the stapler unit.

Cause	There are no staples in the staple cartridge of the Inner Finisher, Staple Finisher, or Booklet Finisher stapler unit.
Remedy	Replace the staple cartridge of the Inner Finisher, Staple Finisher, or Booklet Finisher stapler unit. (See "Replacing the Staple Cartridge in the Stapler Unit," on p. 1-31.)

Check punch waste tray.

Cause	The punch waste tray of the Puncher is full or almost full.
Remedy	Remove the punch waste in the punch waste tray of the Puncher. (See "Removing Punch Waste," on p. 1-37.)

Load staples into the saddle stitcher unit.

Cause	There are no staples in the staple cartridge of the Booklet Finisher saddle stitcher unit.
Remedy	Replace the staple cartridge of the Booklet Finisher saddle stitcher unit. (See "Replacing the Staple Cartridge in the Saddle Stitcher Unit," on p. 1-34.)

The hard disk needs to be replaced. (Call service rep.)

Cause	The hard disk is not functioning properly, or is not attached.
Remedy 1	Contact your local authorized Canon dealer.
Remedy 2	If the optional Removable HDD Kit is installed, check the hard disk.

List of Error Codes without Messages

If a job or operation does not complete successfully, check the error code, and perform the necessary operations according to the error code displayed. You can check the error code on the Details screen when you press [Log] on the Status Monitor/Cancel screen. (See e-Manual > Status Monitor/Cancel.)

If a send, receive, or fax job does not complete successfully, the error code is printed in the Results column on the Activity Report and Send Report. However, if a send job is cancelled, "STOP" is printed in the Results column on the Send report. (See Chapter 17, "Appendix," in Getting Started.)

Perform the necessary procedures according to the error code.

001

Cause 1	Different sized originals were scanned without setting the Different Size Originals mode.
Remedy	Set the Different Size Originals mode, and then try scanning again.
Cause 2	Different sized originals were scanned in the 2-Sided Original without setting the Different Size Originals mode.
Remedy	Set the Different Size Originals mode, and then try scanning again.

009

Cause 1	There is no paper.
Remedy	Load paper. (See "Paper Drawers," on p. 1-2.)
Cause 2	The paper is not loaded correctly in the paper source.
Remedy	Set the paper properly. (See "Paper Drawers," on p. 1-2.)

099

Cause1	The current job was interrupted.
Remedy	Try processing the job again.
Cause2	An error occurred because the main power switch was turned OFF while a job was being processed.
Remedy	Check to see if the main power switch is turned ON. Try processing the job again, if necessary. (See e-Manual > Before You Start Using This Machine.)

401

Cause	The memory media, server, or Advanced Box became full, or the maximum number of files that can be saved in the root directory (the top folder inside the memory media) was reached.
Remedy	Delete unnecessary files in the memory media, server, or Advanced Box, or create a new folder and move existing files to that folder to organize the files in the root directory.

402

Cause	While the data, such as image data, was being transferred to the memory media, some error occurred because the unauthorized character was included in the file name.
Remedy	Rename the file.

403

Cause	The job was failed because the same file name existed. Generally, if the same file name exists, a file will be automatically renamed by adding a number, which ranges from 1 to 999, to the tail of its file name in order to avoid naming conflicts. However, this error occurred because the file with the same number already added to its file name existed.
Remedy	Rename the file, and then write the data again.

404

Cause	The job was failed because the write protect switch of the memory media was turned ON.
Remedy	Turn OFF the write protect switch of the memory media.

406

Cause 1	The job failed because the memory media was removed from the USB port or the Network Place was deleted while the job was in progress.
Remedy	Confirm that the memory media is properly inserted or the Network Place is existed, and then write the data again.
Cause 2	While data, such as image data, was being transferred to the memory media, some error occurred. (The connected memory media may be formatted with an unsupported file system.)
Remedy	Check the status of the memory media and confirm that it is formatted with the file system that the machine supports (FAT32). Then, perform the operation again.
Cause 3	The file size has reached the limit.
Remedy	Lower the resolution or delete pages, and then try processing the job again.

407

Cause	The length of the full path to the specified file (or folder) exceeded the supported limit.
Remedy	The limit of the length of the full path is 256. Change or shorten the file name to be written.

409

Cause	The files or folders cannot be stored because the number of files or folders that can be stored has reached the limit.
Remedy	Change the storage.

410

Cause	The files cannot be stored because there are too many jobs waiting to be stored.
Remedy	Try storing the files again after the previous job finishes being stored.

411

Cause	The files are already locked by the other operations.
Remedy	Wait a few moments, and try processing the job again.

701

Cause 1	The specified Department ID does not exist, or the PIN has changed.
Remedy	Enter the correct Department ID or password using 0-9 (numeric keys) on the control panel, and try again.
Cause 2	The Department ID or password was changed while the machine was processing a job.
Remedy	Change the Department ID and password, and try again. If you do not know the password, contact your System Manager.
Cause 3	<Allow Printer Jobs with Unknown IDs> is set to 'Off'.
Remedy	Set <Allow Printer Jobs with Unknown IDs> to 'On'. (See e-Manual > Security.)

703

Cause	The hard disk is full, and no more images can be scanned.
Remedy 1	Wait a few moments, and try scanning again after the current send jobs complete.
Remedy 2	Erase files stored in the Mail Box and the Fax/I-Fax Inbox. If the machine still does not operate normally, turn the main power OFF, and then back ON again. (See e-Manual > Before You Start Using This Machine.)

#711

Cause	The Mail Box and the Fax/I-Fax Inbox memory is full.
Remedy	Erase unnecessary files stored in the Mail Box and the Fax/I-Fax Inbox. (See e-Manual > Fax/I-Fax Inbox and Access Stored Files.)

712

Cause	The maximum number of files are already stored in the Mail Box and the Fax/I-Fax Inbox.
Remedy	Erase unnecessary files stored in the Mail Box and the Fax/I-Fax Inbox. (See e-Manual > Fax/I-Fax Inbox and Access Stored Files.)

749

Cause	You could not execute the job because a service call message is being displayed.
Remedy	Turn the main power OFF, wait 10 or more seconds, and turn the main power back ON. If the machine still does not work normally, turn the main power OFF, disconnect the machine, and contact your local authorized Canon dealer. (See e-Manual > Before You Start Using This Machine.)

#754

Cause	The client machine is not functioning while delivering the device information or the network is down. The destination setting is not correct.
Remedy	Check the client machine and network. Check the destination settings.

759

Cause	An error occurred while sending the URL of a Mail Box.
Remedy	Contact your System Manager.

807

Cause	You do not have the access privilege to the specified directory.
Remedy	Set the access privilege to the directory in the server, resend the file to the directory with the access privilege, or contact your System Manager.

816

Cause	You cannot print because the set page limit total has been reached.
Remedy	Contact your System Manager.

825

Cause 1	Reserved or current print jobs cannot be performed because the Department ID and password have been deleted, or the password has been changed.
Remedy	Try again with the Department ID and password that are registered. Register the Department ID and password. If you do not know the password, contact your System Manager.
Cause 2	Device information could not be delivered because the destination client machine has a system manager registered, but the system manager is not set on the host machine. Or, device information could not be delivered because the System Manager ID and System PIN registered in the client machine are different from the System Manager ID and System PIN registered in the host machine.
Remedy	Register the same System Manager ID and System PIN in the client machine as the System Manager ID and System PIN registered in the host machine, and deliver the device information again.

849

Cause	Device information could not be delivered because the client machine is processing a job.
Remedy	Try delivering device information again after the client machine finishes processing the job.

850

Cause	Device information could not be delivered because a screen relating to the device information to be delivered is being processed.
Remedy	Try delivering the device information again after the screen is cleared from the client machine. (See e-Manual > Security.)

851

Cause 1	There is insufficient memory remaining in the system.
Remedy	Check the system's available memory, and delete any unnecessary files stored in the Mail Box and Fax/I-Fax Inbox. (See e-Manual > Fax/I-Fax Inbox and Access Stored Files.)
Cause 2	The machine's memory is full.
Remedy	Erase unnecessary files and files with errors from memory to increase the amount of available memory. (See e-Manual > Fax/I-Fax Inbox and Access Stored Files.)
Cause 3	The scanned file cannot be stored because there are more than 1,500 files in the specified Mail Box and Fax/I-Fax Inbox.
Remedy	If there are a large number of files, delete the unnecessary ones from the specified Mail Box and Fax/I-Fax Inbox. (See e-Manual > Fax/I-Fax Inbox and Access Stored Files.)

852

Cause	An error occurred because the main power was turned OFF due to an unspecified cause while a job was being processed.
Remedy	Check to see that the power plug is firmly inserted into the power outlet and that it is not in a situation where the power can easily be turned OFF. Try processing the job again, if necessary.

853

Cause 1	When trying to print a large number of pages, the job is not performed due to insufficient memory resources.
Remedy	Reduce the number of pages to print, or perform the print job again when no other jobs are reserved.
Cause 2	The job could not be processed, because it was cancelled from the printer driver while the print data was being sent to the machine.
Remedy	Try printing again.
Cause 3	The spool memory is full when [Use Spool Function] in [Network Settings] in [Device Use Settings] (Settings/Registration) is set to 'On', therefore, data received from the host could not be spooled.
Remedy	Set [Use Spool Function] in [Network Settings] in [Device Use Settings] (Settings/Registration) to 'Off', and try sending the print data again. (See e-Manual > Network.)
Cause 4	The maximum number of receivable data exceeds the receive limit.
Remedy	Try printing the files again after all current jobs are complete. If you still cannot print, check the sent data.
Cause 5	The number of secured documents exceeded the maximum limit that can be reserved at a time.
Remedy	Print or erase the secured documents that are stored in the machine, and try printing again. (See e-Manual > Print.)

854

Cause	Device information could not be delivered because the client machine has [Restrict Receiving Device Information] in [Device Information Delivery Settings] in [Management Settings] (Settings/Registration Screen) set to 'On'.
Remedy	Try delivering device information again after setting Restrictions for [Restrict Receiving Device Information] in [Device Information Delivery Settings] in [Management Settings] (Settings/Registration) to 'Off'. (See e-Manual > Security.)

855

Cause	Device information could not be delivered because a language that the client machine cannot handle was included in the device information.
Remedy	Contact your local authorized Canon dealer.

#856

Cause	The job was cancelled because there was not enough free space on the hard disk to store the temporary data.
Remedy	Contact your System Manager.

857

Cause	Data reception timed out, or the job was cancelled at the host.
Remedy	Check that the network is functioning properly, and then try printing again.

858

Cause	There is a problem with the print data sent from an external application.
Remedy	Check the settings of the data sent to the machine, make sure they are compatible with the machine, and try sending the data again.

859

Cause 1	A compression error occurred with the image data.
Remedy	Check the print settings, and try printing again.
Cause 2	An original was not scanned properly, or the orientation of the original was incorrect.
Remedy 1	Check the scan settings, and try scanning again.
Remedy 2	Turn the main power OFF, wait for 10 or more seconds, and turn the main power back ON.

860

Cause 1	A paper jam occurred during printing.
Remedy	Try printing again.
Cause 2	You tried to print on a transparency sheet not made for this machine.
Remedy	Load transparencies made for this machine into the machine and then try printing again.
Cause 3	A print job using a PDL that is not supported by this machine was inserted.
Remedy	Confirm the PDLs supported by this machine with your system administrator, and use the appropriate printer driver.
Cause 4	An unsupported combination of settings was specified for Color Mode and Superimpose Image (Overlay).
Remedy	Perform printing again after changing the settings by selecting a color mode that supports Superimpose Image (Overlay) for the selected image form, or selecting an image form that supports Superimpose Image (Overlay) with the selected color mode.

861

Cause	An error occurred while processing PDL data or image data.
Remedy	Confirm the print settings you made when printing from a computer.

862

Cause 1	The saddle finisher trays have exceeded their stacking limits. (See Chapter 17, "Appendix," in *Getting Started*.)
Remedy	Change the print data or print settings, and try printing again.
Cause 2	A combination of settings which is not supported was set.
Remedy	Change the print data or print settings, and try printing again.
Cause 3	Data which is not guaranteed to be compatible was printed.
Remedy	Change the print data or print settings, and try printing again.
Cause 4	You could not print the file when the tab paper is specified as the paper type and the Inner Finisher-A1 is attached.
Remedy	You cannot output tab paper when the Inner Finisher-A1 is attached but the Copy Tray-J1 is not attached. If necessary, attach the Copy Tray-J1.

863

Cause	An error occurred while processing PDL data or image data.
Remedy	Check the settings, and try printing again.

865

Cause	A function related to performing jobs is restricted.
Remedy	Contact your System Manager.

889

Cause	You cannot scan or print the document because it has Scan Lock Information embedded.
Remedy	Check the Scan Lock Information or contact your System Manager.

904

Cause	The destination which is registered in [Favorite Settings] cannot be updated even when an address book is acquired from an iR/imagePRESS series connected to the network.
Remedy	Register [Favorite Settings] using the touch panel display of the machine.

905

Cause	You cannot execute the job because some error occurred on the network.
Remedy	Check the length of the path, access privilege, and the use of the files or folders.

If Memory Becomes Full during Scanning

The machine's memory can store up to approximately 6,200 pages of scanned images. Approximately 6,000 pages of that total is shared by the various functions, including the Copy; Fax; Scan and Send; Scan and Store (Store in Mail Box); Fax/I-Fax Inbox; and, printing from computer functions. In addition, each function is guaranteed to be able to store the following number of pages:

Copy: 100 pages
Print From Computer: 100 pages (excluding Secured Print jobs)

For example, the Copy function can store up to approximately 6,100 pages of scanned images.
100 + 6,000 = 6,100 pages (approximate figures)
However, the number of pages that the machine's memory can store may differ, depending on the amount of memory required for files stored in the Mail Box and Fax/I-Fax Inbox, and jobs that are in the print queue.

If memory becomes full during the scanning of originals, the following message will appear on the touch panel display:

IMPORTANT

When using Fax/Scan and Store, you can send up to 999 pages at one time.

NOTE

Delete any unnecessary files in the Mail Box and Fax/I-Fax Inbox to free up memory.

For the Copy function

1 Follow the directions below based on the message that appears on the touch panel display.

- **If the message <Scanning will be stopped because the memory is full. Do you want to print the scanned pages?> appears:**

  ☐ Select [Yes] or [No].

  [Yes]: The pages scanned into memory are printed. When printing is complete, scan the remaining originals.

  [No]: The pages scanned into memory are not printed.

- **If the message <Scanning will be stopped because the memory is full. Wait a moment, then try again.> appears:**

  ☐ Select [OK].

  [OK]: Returns to the Basic Features screen of the function you are using. Scan the job again when the current job is complete.

For the Fax/Scan and Send function

1 Follow the directions below based on the message that appears on the touch panel display.

- **If the message <Scanning will be stopped because the memory is full. Do you want to send the scanned pages?> appears:**

  ☐ Select [Yes] or [No].

  [Yes]: The pages scanned into memory are sent. When sending is complete, scan the remaining originals.

  [No]: The pages scanned into memory are not sent.

For the Scan and Store function

1 **Follow the directions below based on the message that appears on the touch panel display.**

- **If the message <Scanning will be stopped because the memory is full. Do you want to store the scanned pages?> appears:**

  ☐ Select [Yes] or [No].

  [Yes]: The pages scanned into memory are stored. When storing is complete, scan the remaining originals.

  [No]: The pages scanned into memory are not stored.

- **If the message <Scanning will be stopped because the memory is full. Wait a moment, then try again.> appears:**

  ☐ Select [OK].

  [OK]: Returns to the Basic Features screen of the function you are using.

Service Call Message

If a malfunction occurs and the machine cannot operate normally, a screen prompting you to contact your local authorized Canon dealer is displayed. Even when the print or scan function does not operate normally, some functions may still be available.

Contacting Your Local Authorized Canon Dealer

If a screen prompting you to contact your local authorized Canon dealer is displayed, follow the procedure described below.

WARNING

Do not connect or disconnect the power cord with wet hands, as this may result in electrical shock.

CAUTION

Always grasp the power plug when disconnecting the power cord. Pulling on the power cord may expose or snap the core wire, or otherwise damage the power cord. If the power cord is damaged, this could cause current to leak, resulting in a fire or electrical shock.

IMPORTANT

If you turn OFF the main power switch when there is a job waiting to print, that job is erased.

1 **Press the main power switch to the "⏻" side.**

When operating the main power switch, open the main power switch cover.

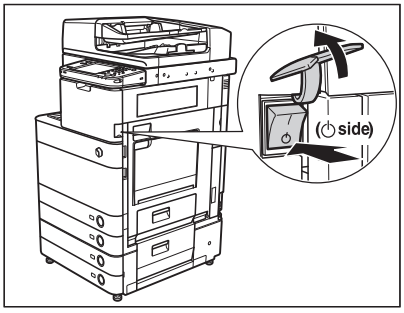

2 **Wait at least 10 seconds after the Main Power Indicator is turned off, and then turn the main power switch back to "I" side.**

When operating the main power switch, open the main power switch cover.

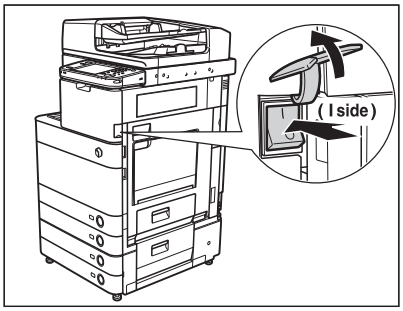

3 **If the machine still does not operate normally, follow the procedure below, and then contact your local authorized Canon dealer.**

- ☐ Turn the main power switch OFF.
- ☐ Remove the power plug from the power outlet.

NOTE

When you contact your local authorized Canon dealer, have the following information available:
- Product name
- Details of the malfunction
- The error code displayed on the touch panel display

Setting the Limited Functions Mode from the Service Call Message Screen

If the Service Call Message screen appears indicating a malfunction of a Finisher mode, you can clear it by turning the Limited Functions Mode 'On' to temporarily limit the use of the finishing modes. However, after the Limited Functions Mode is deactivated, the Service Call Message screen may appear again, unless the cause of the malfunction is removed.

IMPORTANT

If you shutdown the machine when there is a job waiting to print, that job is erased.

NOTE

If you set [Limited Functions Mode] to 'On' from the Service Call Message screen, [Limited Functions Mode] in [Management Settings] (Settings/Registration) is also set to 'On'. (See e-Manual > Security.)

1 **Press [Limited Functions Mode].**

2 **Press [Yes].**

A message prompting you press [Shutdown] and to turn the main power switch back ON appears.

3 **Press the main power switch to the "⏻" side.**

When operating the main power switch, open the main power switch cover.

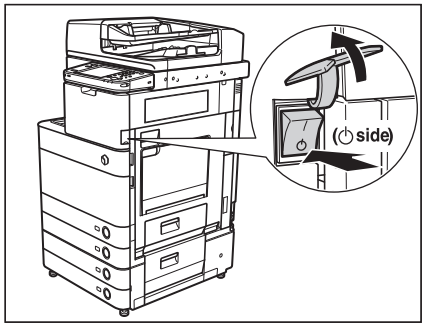

4 **Wait at least 10 seconds after the Main Power Indicator is turned off, and then turn the main power switch back to "I" side.**

When operating the main power switch, open the main power switch cover.

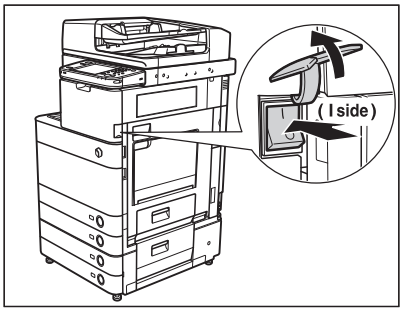

The machine starts up in the Limited Functions mode.

Functions Available When the Printer/Scanner Cannot Be Used Due to an Error

Some functions may still be available even when one of the following error messages that indicate the Print and Scan functions cannot be used is displayed on the bottom of the screen.

When the Print function is restricted: <Check the printer. Call service representative.>

When the Scan function is restricted: <Check the scanner. Call service representative.>

You can use the following functions even when the Print and Scan functions are restricted.

- Main Menu Screen

✓: Available -: Unavailable

Available Function	When the Print function is restricted	When the Scan function is restricted
Copying	-	-
Fax	✓	-
Scan and Send	✓	-
Scan and Store	✓*1	-
Access Stored Files	-	✓*2
Fax/I-Fax Inbox	-	✓
Secured Print	-	✓
Scanner	✓	-
Web Access	✓	✓
Settings/Reg. Shortcut	-	-
Tutorial	✓	✓
iW Function Flow	-	-
Scan Code Analyzer*3	✓	-
Other MEAP Applications*4	✓	✓

- Control Panel

✓: Available -: Unavailable

Available Function	When the Print function is restricted	When the Scan function is restricted
Quick Menu*5	✓	✓
Status Monitor/Cancel	✓*6	✓
Settings/Registration	-	-

- Operation from a Computer

✓: Available -: Unavailable

Available Function	When the Print function is restricted	When the Scan function is restricted
Remote UI	✓	✓
MEAP Application*4	✓	✓

*1 [Print List] on the Mail Box Selection screen is not available.

*2 [Add Files (Scan and Store)] on the Edit File screen is not available.

*3 Document Scan Code Analyzer is included in the Document Scan Lock Kit. For information on the optional products required to use this function, see e-Manual > Optional Products.

*4 Available by installing each MEAP application. May not be available depending on the restricted functions.

*5 The registered button may not be available depending on the restricted functions.

*6 [Print List] on the Job Log screen and [Register] on the Consumable screen are not available.

IMPORTANT

- A print job is automatically cancelled when the Print function is restricted. A scan job is automatically cancelled when the Scan function is restricted.
- The machine may not enter the Sleep mode completely when the function is restricted due to an error.

NOTE

- If the target function is restricted due to an error, the function is not available when you use the shortcut key on the top of the Main Menu screen or when you use the Quick Menu.
- [Remove Toner Cartridges] is not available when the Print function is restricted.

When the Power Does Not Turn ON

If you cannot operate the machine, even though the main power switch and the control panel power switch are both turned ON, always check that the breaker is not in the OFF position.

If the breaker is in the OFF position, contact your local authorized Canon dealer without turning the breaker back ON.

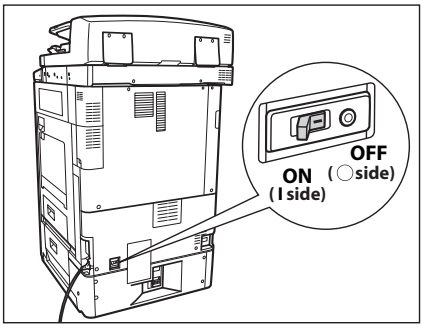

WARNING

If the breaker is in the OFF position, do not switch the current leakage breaker back ON. Doing so may lead to a fire, electrical shock, smoke, or the tripping of other breakers in the facility.

Printer/Fax Driver Troubleshooting

See the "Troubleshooting" in the driver help to resolve problems when using the printer driver or fax driver for Windows. In this section, screens for the printer driver are used.

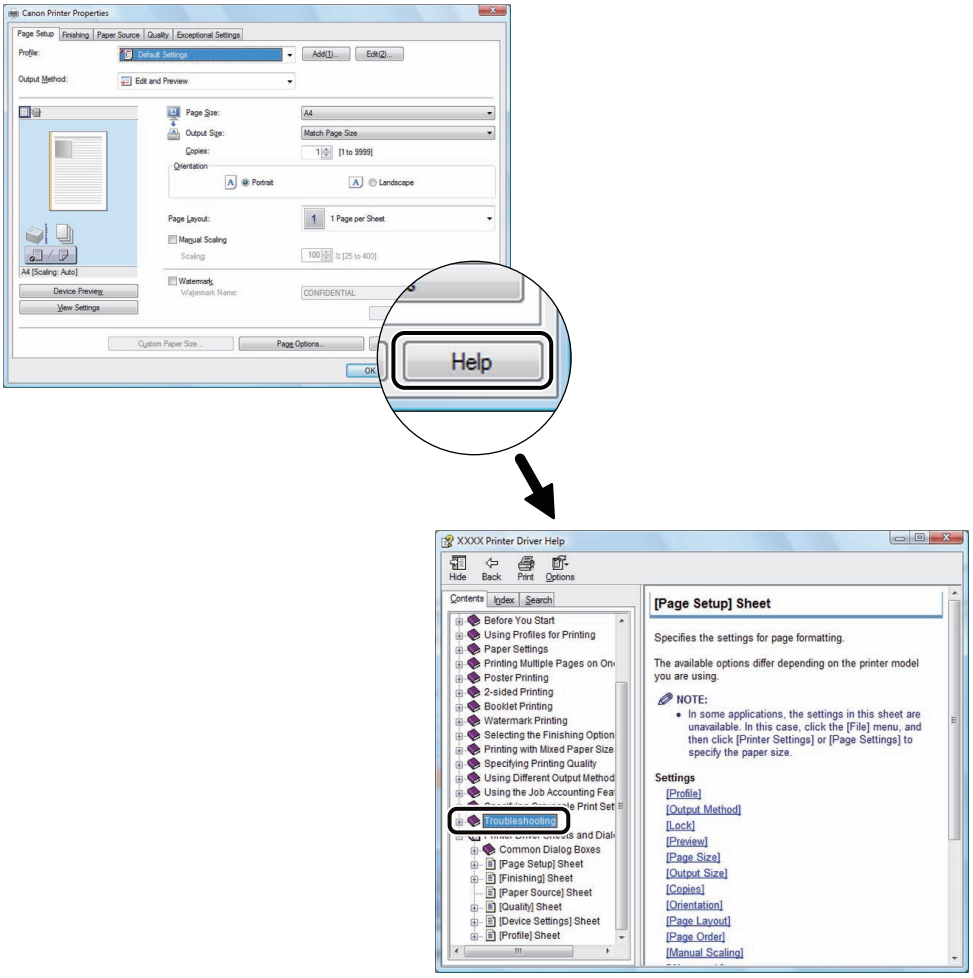

Appendix

3
CHAPTER

This section includes the index.

Index 3-2

Index

A

Abbreviations Used in This Manual, ix

B

Booklet Finisher-C1
- Clearing paper jams, 2-29, 2-30, 2-31, 2-33
- Clearing staple jams, 2-44
- Clearing staple jams in the saddle stitcher, 2-46
- Replacing the staple cartridge in the saddle stitcher unit, 1-34
- Replacing the staple cartridge in the stapler unit, 1-31

Breaker, 2-65

Buffer Pass Unit-G1
- Clearing paper jams, 2-30

C

Cassette Feeding Unit-AD1
- Clearing paper jams, 2-18

Cleaning
- Automatic feeder cleaning, 1-54
- Dust Proof Glass, 1-55
- Inside of the Main Unit, 1-55
- Manual feeder cleaning, 1-48
- Platen Glass and Underside of the Feeder/Platen Cover, 1-47

Consumables
- Paper stock, 1-57
- Stamp Cartridge, 1-59
- Toner, 1-58

Copyright, ix

Copy Tray-J1
- Clearing paper jams, 2-40

D

Disclaimers, ix

Displays Used in This Manual, viii

Duplexing Unit
- Clearing paper jams, 2-8, 2-10

E

Envelope Feeder Attachment-C2
- About Envelope Feeder Attachment-C2, 1-13
- Preparing the Envelopes, 1-14

Error messages
- Error codes without messages, 2-53
- Self-diagnostic display, 2-50

External 2 Hole Puncher-B1/External 2/4 Hole Puncher-B1/External 4 Hole Puncher-B1
- Removing punch waste, 1-37

F

Feeder
- Clearing paper jams, 2-23

Fixing Unit
- Clearing paper jams, 2-7

Front Guide, 1-5

I

Illustrations Used in This Manual, viii

Inner 2 Way Tray-F1
- Clearing paper jams, 2-38

Inner Finisher-A1
- Clearing paper jams, 2-26
- Clearing staple jams, 2-42
- Replacing the staple cartridge, 1-28

K

Keys Used in This Manual, vii

L

Left Guide, 1-5

Legal notices
- Copyright, ix
- Disclaimers, ix
- Trademarks, ix

Loading Paper
- Paper Deck Unit-B1, 1-7
- Paper drawers, 1-2

M

Maintenance
- Loading paper (Paper Deck Unit-B1), 1-7
- Loading paper (paper drawers), 1-2
- Removing punch waste, 1-37
- Replacing the stamp cartridge, 1-23, 1-26
- Replacing the staple cartridge in the Inner Finisher, 1-28
- Replacing the staple cartridge in the saddle stitcher unit, 1-34
- Replacing the staple cartridge in the stapler unit, 1-31
- Replacing the toner cartridges, 1-39

P

Paper Deck Unit-B1
- About Paper Deck Unit-B1, 1-7
- Clearing paper jams, 2-20
- Loading paper, 1-7

Paper drawers
- About the paper drawers, 1-2
- Adjusting to hold different paper size, 1-5
- Clearing paper jams, 2-13, 2-15
- Front Guide, 1-5
- Left Guide, 1-5
- Loading paper, 1-2
- Paper Size Plate, 1-6

Paper jams
- Booklet Finisher-C1, 2-31
- Cassette Feeding Unit-AD1, 2-18
- Clearing, 2-3
- Copy Tray-J1, 2-40
- Duplexing Unit, 2-10
- Entrance of Duplexing Unit, 2-8
- Feeder, 2-23
- Fixing Unit, 2-7
- Inner 2 Way Tray-F1, 2-38
- Inner Finisher-A1, 2-26
- Paper Deck Unit-B1, 2-20
- Paper drawer, 2-13, 2-15

Paper Output Unit, 2-5
Puncher, 2-36
Reducing the Frequency of Paper Jams, 2-2
Saddle stitcher unit, 2-33
Screens indicating locations of paper jams, 2-3
Stack bypass, 2-11
Staple Finisher-C1/Booklet Finisher-C1, 2-29, 2-30
Paper Output Unit
Clearing paper jams, 2-5
Paper Size Plate, 1-6
Printer/Fax Driver Troubleshooting, 2-66
Puncher
Clearing paper jams, 2-36

R

Routine Cleaning, 1-47

S

Saddle Stitcher Unit, 1-34, 2-46
Service call message, 2-61
Stack bypass
Clearing paper jams, 2-11
Stamp Cartridge, 1-59
Replacing the Stamp Cartridge, 1-23, 1-26
Staple Finisher-C1
Clearing paper jams, 2-29, 2-30
Clearing staple jams, 2-44
Replacing the staple cartridge in the stapler unit, 1-31
Staple jams
Inner Finisher-A1, 2-42
Saddle stitcher unit, 2-46
Staple Finisher-C1/Booklet Finisher-C1, 2-44
Stapler Unit, 1-31, 2-44
Symbols Used in This Manual, vii

T

Toner cartridge
About the toner cartridge, 1-58
Replacing the toner cartridges, 1-39
Trademarks, ix
Troubleshooting
Clearing paper jams, 2-3
Clearing Staple Jams, 2-42
Error messages, 2-50
Memory full, 2-59
Printer/Fax Driver Troubleshooting, 2-66
Reducing the Frequency of Paper Jams, 2-2
Service call message, 2-61
When the power does not turn ON, 2-65

W

Waste Toner Container
Replacing the Waste Toner Container, 1-44

CANON INC.
30-2, Shimomaruko 3-chome, Ohta-ku, Tokyo 146-8501, Japan
CANON U.S.A., INC.
One Canon Plaza, Lake Success, NY 11042, U.S.A.
CANON CANADA INC.
6390 Dixie Road Mississauga, Ontario L5T 1P7, Canada
CANON EUROPA N.V.
Bovenkerkerweg 59-61 1185 XB Amstelveen, The Netherlands
(See http://www.canon-europe.com/ for details on your regional dealer)
CANON LATIN AMERICA, INC.
703 Waterford Way Suite 400 Miami, Florida 33126 U.S.A.
CANON AUSTRALIA PTY. LTD
1 Thomas Holt Drive, North Ryde, Sydney, N.S.W. 2113, Australia
CANON CHINA CO., LTD
15F Jinbao Building No.89 Jinbao Street, Dongcheng District, Beijing 100005, China
CANON SINGAPORE PTE. LTD.
1 HarbourFront Avenue #04-01 Keppel Bay Tower, Singapore 098632
CANON HONGKONG CO., LTD
19/F., The Metropolis Tower, 10 Metropolis Drive, Hunghom, Kowloon, Hong Kong

FT5-3457 (000) XXXXXXXXXX © CANON INC. 2010 PRINTED IN CHINA