Canon

imageRUNNER
ADVANCE
C9075 PRO/C9065 PRO
C7065/C7055

Maintenance Guide

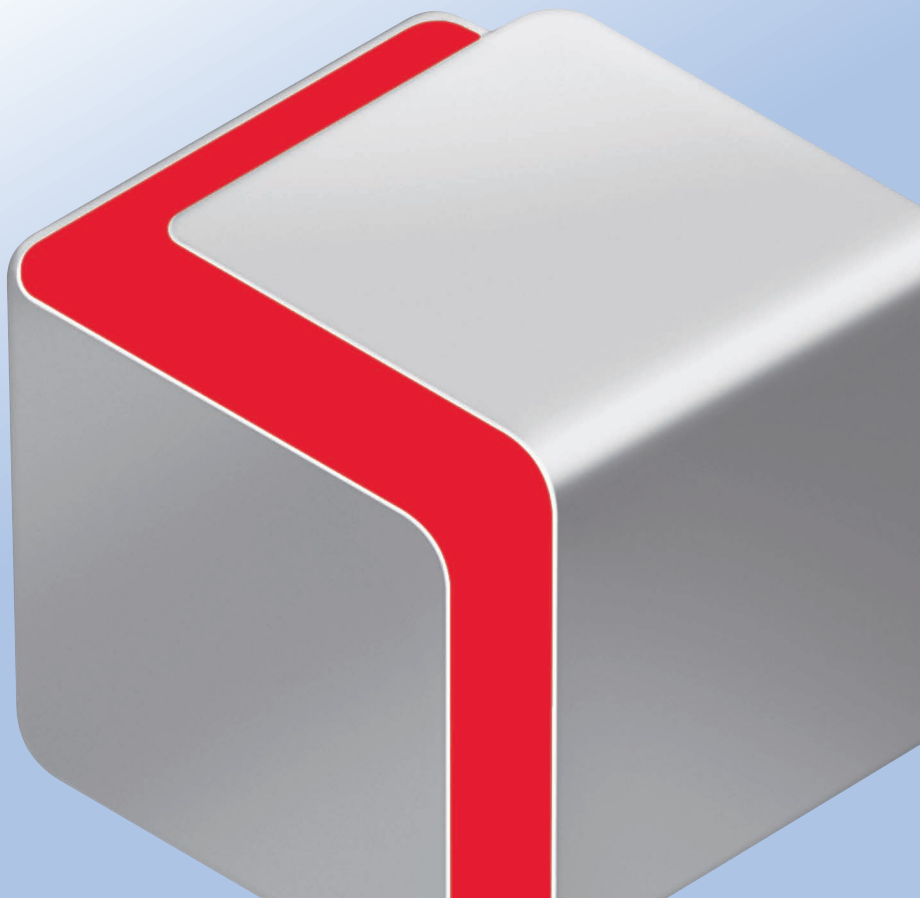

Please read this guide before operating this product.
After you finish reading this guide, store it in a safe place for future reference.

ENG

imageRUNNER ADVANCE C9075 PRO/C9065 PRO C7065/C7055

Maintenance Guide

Manuals for the Machine

The manuals for this machine are divided as follows. Please refer to them for detailed information.

Guides with this symbol are printed manuals.

Guides with this symbol are included on the accompanying CD-ROM.

• **Precautions for Using Your Machine and Settings Required after Machine Installation**	**Getting Started**	Printed / CD-ROM
• **Quick Reference for Basic and Useful Operations**	**Quick Reference**	Printed / CD-ROM
• **Maintenance and Troubleshooting**	**Maintenance Guide (This Document)**	Printed / CD-ROM
• **Frequently Asked Questions and Answers**	**Frequently Asked Questions**	Printed / CD-ROM
• **Windows Printer Driver Installation and Instructions**	**Printer Driver Installation Guide**	CD-ROM
• **Mac Printer Driver Installation and Instructions** The Mac UFR II Driver Guide and the Mac PS Driver Guide	**Mac Printer Driver Installation Guide**	CD-ROM
• **Windows Fax Driver Installation and Instructions**	**Fax Driver Installation Guide**	CD-ROM
• **Windows Network ScanGear Installation and Instructions**	**Network ScanGear Installation Guide**	CD-ROM

•Comprehensive Manual for Basic Operations and Handling Your Machine

e-Manual

- Before You Start Using This Machine
- How to Use This Manual
- Basic Operations
- Optional Products (imageRUNNER ADVANCE C9075 PRO/C9065 PRO)
- Optional Products (imageRUNNER ADVANCE C7065/C7055)
- Settings/Registration
- Problem Solving
- Maintenance
- Practical Workflows

- Copy
- Fax
- Scan and Send
- Scan and Store
- Access Stored Files
- Fax/I-Fax Inbox
- Secured Print
- Hold
- Web Access
- Scanner
- Quick Menu
- Status Monitor/Cancel
- Print
- Network
- Remote UI
- MEAP
- Security
- Software

To view the manual in PDF format, Adobe Reader/Adobe Acrobat Reader is required. If Adobe Reader/Adobe Acrobat Reader is not installed on your system, please download it from the Adobe Systems Incorporated website.

How This Manual Is Organized

Chapter 1 Routine Maintenance

Chapter 2 Troubleshooting

Chapter 3 Appendix

Includes the index.

Considerable effort has been made to ensure that this manual is free of inaccuracies and omissions. However, as we are constantly improving our products, if you need an exact specification, please contact Canon.

Contents

Preface ..... **vii**

How To Use This Manual ..... **vii**

Symbols Used in This Manual vii
Keys Used in This Manual vii
Displays Used in This Manual viii
Illustrations Used in This Manual viii
Abbreviations Used in This Manual ix
Trademarks ix
Copyright ix
Disclaimers ix

Chapter 1 Routine Maintenance

Paper Drawers **1-2**

Loading Paper 1-2
Adjusting a Paper Drawer to Hold a Different Paper Size 1-6
Loading Transparencies 1-8
Loading Tab Paper 1-8
How to Load Tab Paper 1-9
Loading Tab Paper into the Paper Drawer 1-10

Paper Deck Unit-A1/POD Deck Lite-A1 (Optional) **1-12**

Loading Paper 1-12
Changing the Paper Size for the POD Deck Lite-A1 1-16

Multi-drawer Paper Deck-A1 (Optional) **1-23**

Loading Paper 1-23
Changing the Paper Size for the Multi-drawer Paper Deck-A1 1-27

Document Insertion Unit-H1 (Optional) **1-31**

Loading Paper 1-31

Document Insertion/Folding Unit-G1/Document Insertion Unit-J1 (Optional) **1-34**

Loading Paper 1-34

Feeder **1-36**

Replacing the Stamp Cartridge 1-36

Staple Finisher-A1/Booklet Finisher-A1/Puncher Unit-BG1/BH1/ Inner Booklet Trimmer-A1 (Optional) **1-39**

Replacing the Staple Cartridge in the Stapler Unit 1-39
Removing Trim Waste 1-42
Replacing the Staple Cartridge in the Saddle Stitcher Unit 1-44
Removing Punch Waste 1-48

Staple Finisher-B1/Booklet Finisher-B1/Puncher (Optional) **1-50**

Replacing the Staple Cartridge in the Stapler Unit 1-50
Replacing the Staple Cartridge in the Saddle Stitcher Unit 1-53
Removing Punch Waste 1-56

Replacing the Toner Cartridge **1-58**

Routine Cleaning **1-63**

Platen Glass and Underside of the Feeder 1-63
Duplex Color Image Reader Unit-A1 1-64
Color Image Reader Unit-A1 1-66
Automatic Feeder Cleaning 1-67
Wire Cleaning 1-67
Roller Cleaning 1-68
Drum Cleaning 1-68
Cleaning the Touch Panel Display 1-68

Consumables **1-69**

Chapter 2 Troubleshooting

Reducing the Frequency of Paper Jams **2-2**

Labels for Clearing Paper Jams **2-3**

(D) Multi-drawer Paper Deck-A1 (Optional) 2-3
(F) Staple Finisher-A1/Booklet Finisher-A1 (Optional) 2-4
(M) Paper Folding Unit-G1 (Optional) 2-6
(I) Document Insertion Unit-H1 (Optional) 2-7
(R) Professional Puncher Integration Unit-B1 (Optional) 2-8

Clearing Paper Jams **2-9**
Screens Indicating the Locations of Paper Jams 2-9
Main Unit (Fixing Transport Unit) 2-12
Multi-purpose Tray 2-15
Right Cover of the Machine (When the Multi-drawer Paper Deck-A1 is attached) 2-17
Right Cover of the Machine 2-19
Left Cover 2-21
Left Part of the Machine (When the Buffer Pass Unit-F1 is Attached) 2-22
Paper Drawers 3 and 4 2-25
Paper Drawer (Right) 2-26
Paper Drawer (Left) 2-28
Buffer Pass Unit-F1 2-29
Duplex Color Image Reader Unit-A1/Color Image Reader Unit-A1 (Optional) 2-32
Paper Deck Unit-A1/POD Deck Lite-A1 (Optional) 2-35
Front Cover of the Multi-drawer Paper Deck-A1 (Optional) 2-37
Paper Decks of the Multi-drawer Paper Deck-A1(Optional) 2-42
Document Insertion Unit-H1 (Optional) 2-43
Insertion Unit of the Document Insertion/Folding Unit-G1/Document Insertion Unit-J1 (Optional) 2-49
Inside the Insertion Unit of the Document Insertion/Folding Unit-G1/
Document Insertion Unit-J1 (Optional) 2-52
Document Insertion/Folding Unit-G1 (Optional) 2-56
Paper Folding Unit-G1 (Optional) 2-61
Inside of the Staple Finisher-A1/Booklet Finisher-A1 (Optional) 2-66
Saddle Stitcher Unit of the Booklet Finisher-A1 (Optional) 2-72
Inside the Top Cover of the Staple Finisher-B1/Booklet Finisher-B1 (Optional) 2-78
Output Area of the Staple Finisher-B1/Booklet Finisher-B1 (Optional) 2-80
Front Cover of the Booklet Finisher-B1 (Optional) 2-83
Saddle Stitcher Unit of the Booklet Finisher-B1 (Optional) 2-86
Professional Puncher Integration Unit-B1 (Optional) 2-88
Puncher (Optional) 2-92
Clearing Staple Jams **2-95**
Staple Finisher-A1/Booklet Finisher-A1 (Optional) 2-95
Saddle Stitcher Unit of the Booklet Finisher-A1 (Optional) 2-97
Staple Finisher-B1/Booklet Finisher-B1 (Optional) 2-100
Saddle Stitcher Unit of the Booklet Finisher-B1 (Optional) 2-102
List of Error Messages **2-106**
Self-Diagnostic Display 2-106
List of Error Codes without Messages 2-109
If Memory Becomes Full during Scanning **2-115**
For the Copy function 2-115
For the Fax/Scan and Send function 2-115
For the Scan and Store function 2-116
Service Call Message **2-117**
Contacting Your Local Authorized Canon Dealer 2-117
Setting the Limited Functions Mode from the Service Call Message Screen 2-118
Functions Available When the Printer/Scanner Cannot Be Used Due to an Error 2-119
When the Power Does Not Turn ON **2-120**
Printer/Fax Driver Troubleshooting **2-121**

Chapter 3 Appendix

Index **3-2**

Preface

Thank you for purchasing the Canon imageRUNNER ADVANCE C9075 PRO/C9065 PRO/C7065/C7055. Please read this manual thoroughly before operating the product to familiarize yourself with its capabilities, and to make the most of its many functions. After reading this manual, store it in a safe place for future reference.

How To Use This Manual

Symbols Used in This Manual

The following symbols are used in this manual to explain procedures, restrictions, handling precautions, and instructions that should be observed for safety.

WARNING	Indicates a warning concerning operations that may lead to death or injury to persons if not performed correctly. To use the machine safely, always pay attention to these warnings.
CAUTION	Indicates a caution concerning operations that may lead to injury to persons, or damage to property if not performed correctly. To use the machine safely, always pay attention to these cautions.
IMPORTANT	Indicates operational requirements and restrictions. Be sure to read these items carefully to operate the machine correctly, and avoid damage to the machine.
NOTE	Indicates a clarification of an operation, or contains additional explanations for a procedure. Reading these notes is highly recommended.

Keys Used in This Manual

The following symbols and key names are a few examples of how keys to be pressed are expressed in this manual:

- Touch Panel Display Keys: [Key Name]
  Example: [Cancel]
  [Close]

- Control Panel Keys: Key Icon (Key Name)
  Example: (Start)
  (Stop)

Displays Used in This Manual

Screen shots of the touch panel display used in this manual are those taken when the following optional equipment is attached to the imageRUNNER ADVANCE C9075 PRO : the Duplex Color Image Reader Unit-A1, Super G3 FAX Board, Copy Tray-P1, Paper Deck Unit-A1.

Note that functions that cannot be used depending on the model or options, are not displayed on the touch panel display.

The keys which you should press are marked with a ⬭, as shown below.

When multiple keys can be pressed on the touch panel display, all keys are marked. Select the keys which suit your needs.

Screen shots used in this manual may differ from the ones you actually see.

3 **Select the color of the toner you want to replace from the display on the control panel → press [Remove Toner Cartridges].**

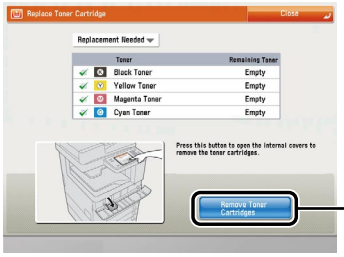

Press this key for operation.

Illustrations Used in This Manual

Illustrations used in this manual are those displayed when the imageRUNNER ADVANCE C9075 PRO has the following optional equipment attached to it: the Duplex Color Image Reader Unit-A1, Super G3 FAX Board, Copy Tray-P1, and Paper Deck Unit-A1.

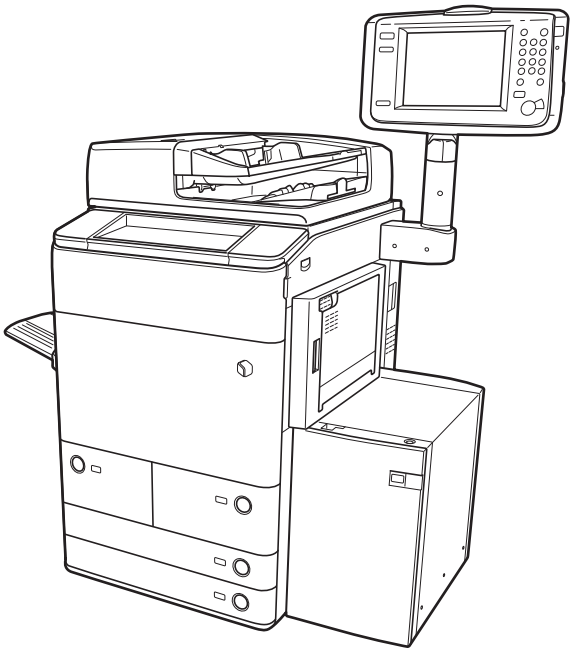

Abbreviations Used in This Manual

In this manual, product names and model names are abbreviated as follows:

Microsoft Windows operating system:	Windows
Apple Mac:	Mac

Trademarks

Apple and Mac are trademarks of Apple Inc., registered in the U.S. and other countries.

Windows is a trademark or a registered trademark of Microsoft Corporation in the U.S. and/or other countries.

Other product and company names herein may be the trademarks of their respective owners.

Copyright

Copyright 2010 by Canon Inc. All rights reserved.

No part of this publication may be reproduced or transmitted in any form or by any means, electronic or mechanical, including photocopying and recording, or by any information storage or retrieval system without the prior written permission of Canon Inc.

Disclaimers

The information in this document is subject to change without notice.

CANON INC. MAKES NO WARRANTY OF ANY KIND WITH REGARD TO THIS MATERIAL, EITHER EXPRESS OR IMPLIED, EXCEPT AS PROVIDED HEREIN, INCLUDING WITHOUT LIMITATION, THEREOF, WARRANTIES AS TO MARKETABILITY, MERCHANTABILITY, FITNESS FOR A PARTICULAR PURPOSE OF USE OR AGAINST INFRINGEMENT OF ANY PATENT. CANON INC. SHALL NOT BE LIABLE FOR ANY DIRECT, INCIDENTAL, OR CONSEQUENTIAL DAMAGES OF ANY NATURE, OR LOSSES OR EXPENSES RESULTING FROM THE USE OF THIS MATERIAL.

Routine Maintenance

1

CHAPTER

This chapter describes how to load paper, perform routine cleaning operations, and replace consumables, such as toner and staple cartridges.

Paper Drawers 1-2
- Loading Paper 1-2
- Adjusting a Paper Drawer to Hold a Different Paper Size 1-6
- Loading Transparencies 1-8
- Loading Tab Paper 1-8
- How to Load Tab Paper 1-9
- Loading Tab Paper into the Paper Drawer 1-10

Paper Deck Unit-A1/POD Deck Lite-A1 (Optional) 1-12
- Loading Paper 1-12
- Changing the Paper Size for the POD Deck Lite-A1 1-16

Multi-drawer Paper Deck-A1 (Optional) 1-23
- Loading Paper 1-23
- Changing the Paper Size for the Multi-drawer Paper Deck-A1 1-27

Document Insertion Unit-H1 (Optional) 1-31
- Loading Paper 1-31

Document Insertion/Folding Unit-G1/Document Insertion Unit-J1 (Optional) 1-34
- Loading Paper 1-34

Feeder 1-36
- Replacing the Stamp Cartridge 1-36

Staple Finisher-A1/Booklet Finisher-A1/Puncher Unit-BG1/BH1/Inner Booklet Trimmer-A1 (Optional) 1-39
- Replacing the Staple Cartridge in the Stapler Unit 1-39
- Removing Trim Waste 1-42
- Replacing the Staple Cartridge in the Saddle Stitcher Unit 1-44
- Removing Punch Waste 1-48

Staple Finisher-B1/Booklet Finisher-B1/Puncher (Optional) 1-50
- Replacing the Staple Cartridge in the Stapler Unit 1-50
- Replacing the Staple Cartridge in the Saddle Stitcher Unit 1-53
- Removing Punch Waste 1-56

Replacing the Toner Cartridge 1-58

Routine Cleaning 1-63
- Platen Glass and Underside of the Feeder 1-63
- Duplex Color Image Reader Unit-A1 1-64
- Color Image Reader Unit-A1 1-66
- Automatic Feeder Cleaning 1-67
- Wire Cleaning 1-67
- Roller Cleaning 1-68
- Drum Cleaning 1-68
- Cleaning the Touch Panel Display 1-68

Consumables 1-69

Paper Drawers

This section describes how to load paper into the paper drawers.

NOTE

- The following paper sizes can be loaded into Paper Drawers
  - Paper Drawer left and right: A4, B5
  - Paper Drawer 3 and 4: 330 mm × 483 mm, 320 mm × 450 mm (SRA3), 305 mm × 457 mm, A3, B4, A4, A4R, B5, B5R, A5R, and custom size (139.7 mm × 182.0 mm to 330.2 mm × 487.7 mm))
  - For more information on available paper stock that can be loaded into the paper drawers, see e-Manual > "Basic Operations."

Loading Paper

If the selected paper runs out, or the selected paper drawer runs out of paper during printing, a screen prompting you to load paper appears on the touch panel display.

Follow the procedure below to load paper into the paper drawers.

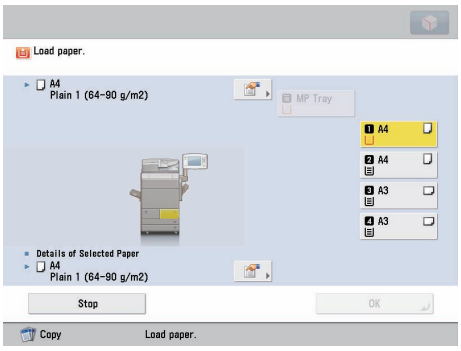

CAUTION

When loading paper, take care not to cut your hands on the edges of the paper.

IMPORTANT

- A screen prompting you to load paper also appears if the selected paper drawer is not fully inserted into the machine. Make sure that the paper drawer is properly in place.
- Do not load the following types of paper into the paper drawers. Doing so may cause a paper jam.
  - Severely curled or wrinkled paper
  - Envelopes
  - Thin straw paper
  - Heavy paper (more than 221 g/m^2)
  - Paper which has been printed on using a thermal transfer printer (Do not print on the reverse side of this paper either.)
- Fan the stack of paper well before loading it, and align the edges of the paper stack on a flat surface.
- Never place paper or any other items in the empty part of the drawer next to the paper stack. Doing so may cause paper jams.
- Fan the stack of paper well before loading it. Paper such as thin paper, recycled paper, pre-punched paper, heavy paper, transparencies, and tab papers should be fanned particularly well before loading it.

NOTE

- If a message prompting you to load paper appears during printing, the remaining prints are automatically made after you load the correct paper. If you select another paper drawer, the remaining prints are made after you press [OK].
- To cancel printing, press [Stop].

1 **Press and release the button on the paper drawer in which you want to load paper.**

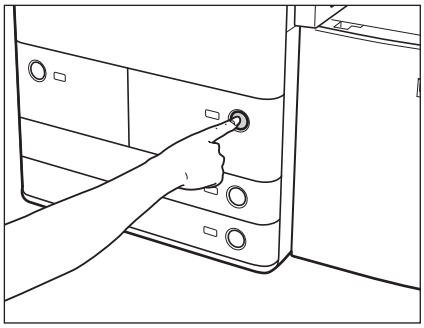

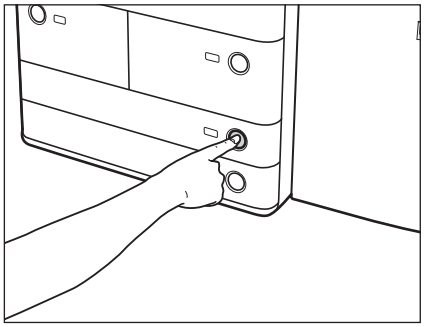

2 **Grip the handle, and pull out the paper drawer until it stops.**

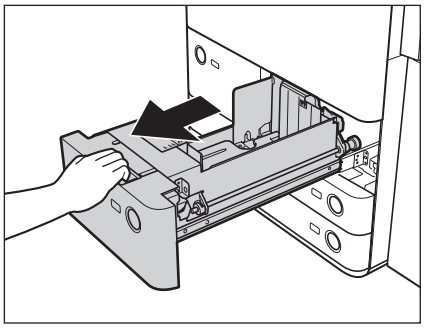

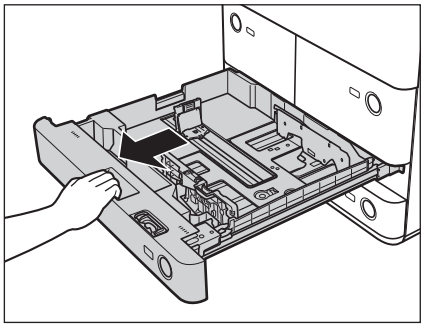

3 Open a package of paper, and remove the paper stack.

CAUTION

When loading paper, take care not to cut your hands on the edges of the paper.

IMPORTANT

- Rewrap any remaining paper in its original package, and store it in a dry place, away from direct sunlight.
- If you print on the paper which has absorbed moisture, steam may come out from the output area of the machine. This is because the moist on the paper evaporates when the high temperature is applied when toner is fixed to the paper. It is not a malfunction. (This especially happens in low room temperature.)

NOTE

- For high-quality printouts, use paper recommended by Canon.
- Before loading paper, always fan the sheets several times, and align the edges to facilitate feeding.

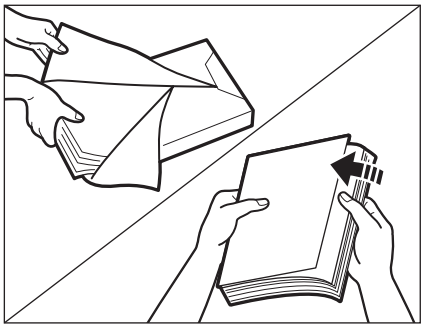

4 Load the paper stack into the paper drawer.

Even out the edges of the paper stack. Load the paper stack against the right wall of the paper drawer.

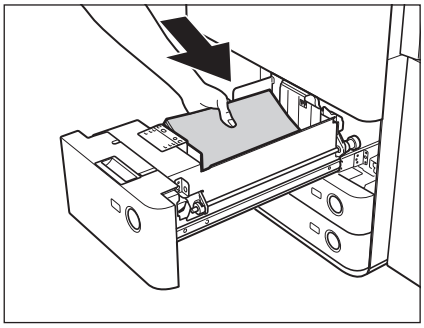

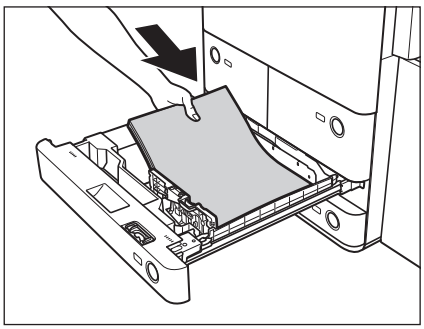

IMPORTANT

- Paper which has been rolled or curled must be straightened out prior to use.
- Make sure that the height of the paper stack does not exceed the loading limit mark at the back of the paper drawer.

NOTE

- Paper drawer Right and Left hold approximately 1250 sheets of paper (64 g/m^2) or 1100 sheets of paper (80 g/m^2).
- Paper drawer 3 and 4 hold approximately 680 sheets of paper (64 g/m^2) or 550 sheets of paper (80 g/m^2).
- If there are instructions on the package of paper about which side of the paper to load, follow those instructions.
- When the paper is loaded into the paper drawer, the side facing down is the one printed on.
- If problems occur, such as poor print quality or paper jams, try turning the paper stack over, and reload it.
- For more information on the print direction of preprinted paper (paper which has logos or patterns already printed on it), see Chapter 17, "Appendix," in *Getting Started*.

5 **Gently push the paper drawer back into the machine until it clicks into place in the closed position.**

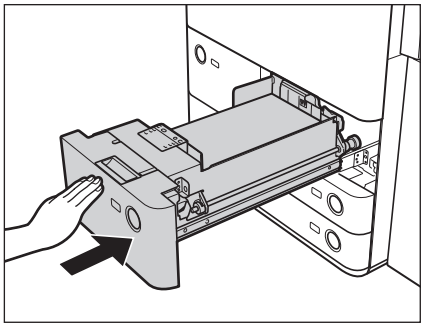

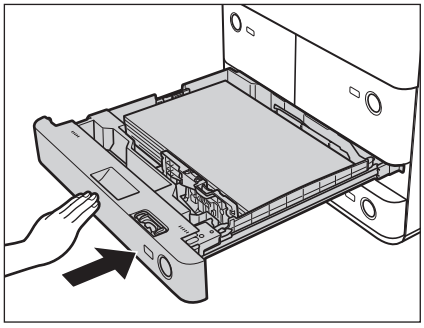

CAUTION

When returning the paper drawer to its original position, be careful not to get your fingers caught, as this may result in personal injury.

IMPORTANT

You will not be able to make copies or print if you load paper that exceeds the loading limit, or if the paper drawer is not completely pushed into the machine. Always check that the paper drawers are in place, and that the paper does not exceed the loading limit.

NOTE

If paper runs out during copying or printing, load a new paper stack, and follow the instructions on the touch panel display. The machine automatically restarts, and produces the remaining copies or prints.

Adjusting a Paper Drawer to Hold a Different Paper Size

If you want to load a different paper size into a paper drawer, follow the procedure described below to adjust the paper drawer guides.

IMPORTANT

Only A4 transparencies can be used. Make sure that the left guide is set to 'A4' when loading transparencies in a paper drawer. If transparencies of a different size (other than A4) are loaded in a paper drawer, the paper size and remaining amount of paper will not be detected correctly.

1 **Press and release the button on the paper drawer that you want to adjust. Grip the handle, and pull out the paper drawer until it stops. Remove all of the remaining paper.**

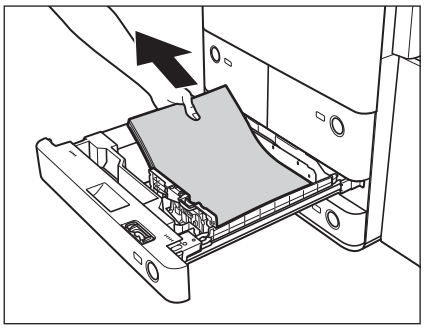

2 **Slide the left guide to align it with the mark for the desired paper size.**

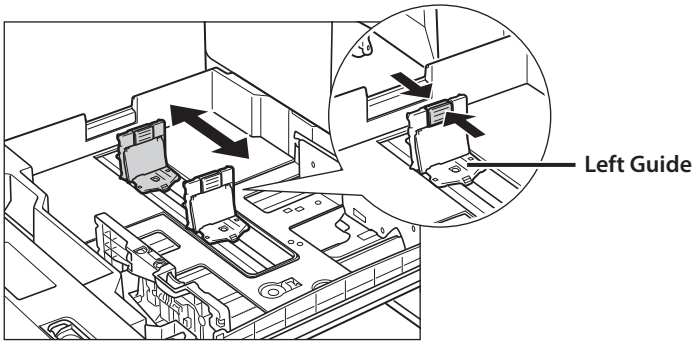

Slide the guide until it clicks into place.

3 **Squeeze the lever on the front guide, as shown below. Without releasing the lever, slide the front guide to align it with the mark for the desired paper size.**

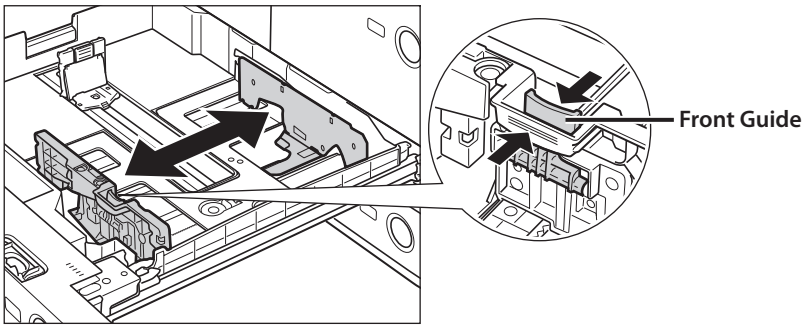

Slide the guide until it clicks into place.

IMPORTANT

Adjust the guides correctly to avoid causing a paper jam, dirty prints, or making the inside of the machine dirty.

4 Load the appropriate size paper into the paper drawer.

CAUTION

When loading paper, take care not to cut your hands on the edges of the paper.

5 Adjust the paper size label to show the new paper size.

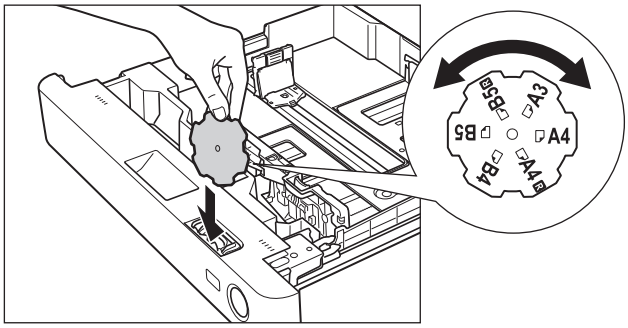

6 Gently push the paper drawer back into the machine until it clicks into place in the closed position.

CAUTION

When returning the paper drawer to its original position, be careful not to get your fingers caught, as this may result in personal injury.

Loading Transparencies

You can load the transparencies to the following paper source.

- Paper Drawers of the main unit
- Multi-purpose Tray
- POD Deck Lite-A1
- Multi-drawer Paper Deck-A1

Unlike normal paper, transparencies have a specific printable surface to ensure the optimal reproduction of images.

When the transparency is loaded in the paper drawer of the main unit, the side facing down is the one printed on.

When the transparency is loaded in the Multi-purpose Tray, POD Deck Lite-A1 or Multi-drawer Paper Deck-A1, the side facing up is the one printed on.

IMPORTANT

- Only A4 transparencies can be used.
- When loading transparencies, be careful not to touch the printable surface. Hold transparencies by their edges.
- Fan the stack of transparencies well before loading it in a paper source. Loading transparencies without fanning them may cause a paper jam.
- Do not load transparencies into a paper source while a print job is in progress. This may cause paper jams.
- Only use transparencies that are specially recommended for use in this machine. Other transparencies may damage the machine.
- To prevent paper jams or the folding of transparencies, it is recommended that you remove them from the output tray as soon as possible.
- Replace unused transparencies into the box in which they came. Leaving them in the paper deck for an extended period of time may cause the transparencies to adhere to one another and result in paper jams. Avoid storing transparencies in a location subject to high-temperatures or humidity.
- If transparencies do become adhered to one another and a paper jam occurs, remove the transparencies, fan them well, make sure that fewer than 100 sheets of transparencies are loaded, or use new transparencies.
- When printing on transparencies, image density may be high, depending on the image type. In this case, adjust the output image density.

NOTE

- You can load up to 250 sheets of transparencies in a paper source other than the Multi-purpose Tray.
- If a paper jam occurs, remove the transparencies and fan them well before reloading them into the paper deck.

Loading Tab Paper

This section describes how to load Tab Paper.

You can load the tab paper to the following paper source.

- Paper Drawer 3 and 4 of the main unit
- Multi-drawer Paper Deck-A1
- Document Insertion Unit-H1
- Document Insertion/Folding Unit-G1/Document Insertion Unit-J1

CAUTION

Only A4 Tab Paper can be used.

NOTE

When you load tab paper into the paper drawer or Multi-drawer Paper Deck-A1, make sure to register the paper type. (See e-Manual > Settings/Registration.)

How to Load Tab Paper

There are two kinds of tab paper: right order tab paper and reverse order tab paper.

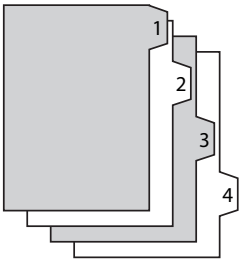

Right Order Tab Paper

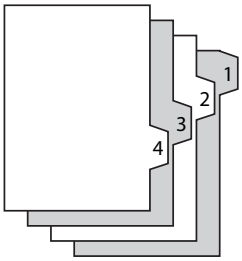

Reverse Order Tab Paper

NOTE

- You cannot make copies or prints on Tab Paper that is loaded in the Document Insertion Unit-H1/Document Insertion/Folding Unit-G1/Document Insertion Unit-J1.
- You can use the Tab Paper set in Document Insertion Unit-H1/Document Insertion/Folding Unit-G1/Document Insertion Unit-J1 for Add Cover, Insert Sheets or Job Separator.
- If you want to insert printed tab paper as a chapter pages, insert a blank paper where the tab paper will be inserted.

Paper Source	How to Load Tab Paper	
Paper Drawer	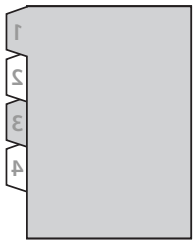	Load reverse order tab paper face down with the tabs to the left side.
Multi-drawer Paper Deck-A1	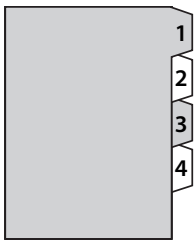	Load right order tab paper face up with the tabs to the right side.
Document Insertion Unit-H1	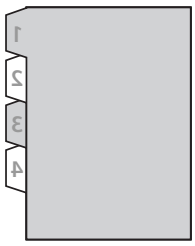	Load reverse order tab paper face down with the tabs to the left side.
Document Insertion/ Folding Unit-G1/ Document Insertion Unit-J1	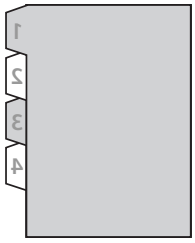	Load reverse order tab paper face down with the tabs to the left side.

NOTE

- For more information on aligning the size change plate, see "Changing the Paper Size for the Multi-drawer Paper Deck-A1," on p. 1-27.
- For more information on selecting the paper size or type of the Document Insertion Unit-H1, see "Loading Paper," on p. 1-31.
- For more information on selecting the paper size or type of the Document Insertion/Folding Unit-G1/Document Insertion Unit-J1, see "Loading Paper," on p. 1-34.

Loading Tab Paper into the Paper Drawer

1 **Press and release the button on the paper drawer in which you want to load tab paper.**

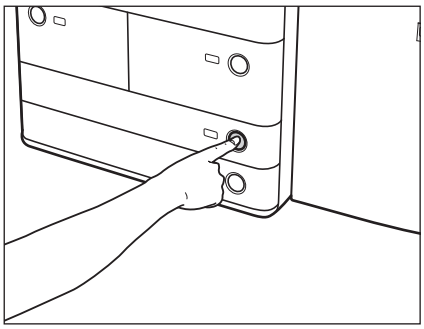

2 **Grip the handle, and pull out the paper drawer until it stops.**

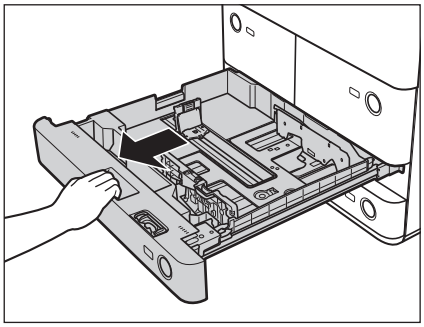

3 **Remove the tab paper guide from its holder by sliding it to the left and lifting it up, and place it as shown below.**

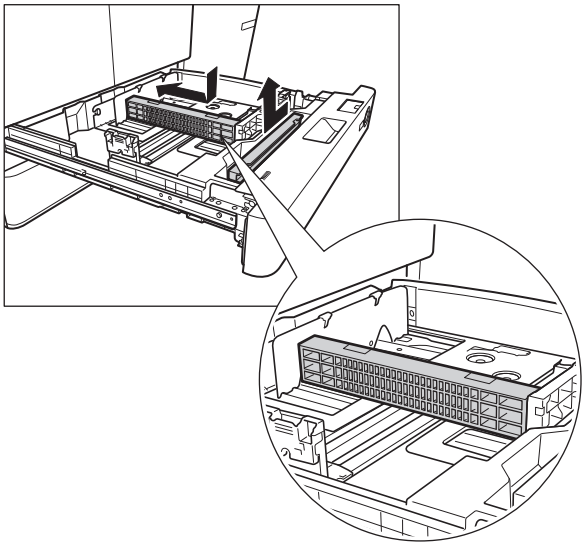

4 Load the tab paper into the paper drawer.

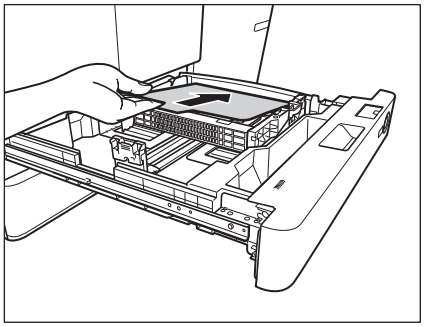

IMPORTANT

- Paper which has been rolled or curled must be straightened out prior to use.
- Make sure that the height of the paper stack does not exceed the limit mark at the back of the paper drawer.

5 Squeeze the lever on the front guide, as shown in the illustration. While squeezing the lever, slide the front guide until it fits the tab.

Set the left guide to A4, if necessary.

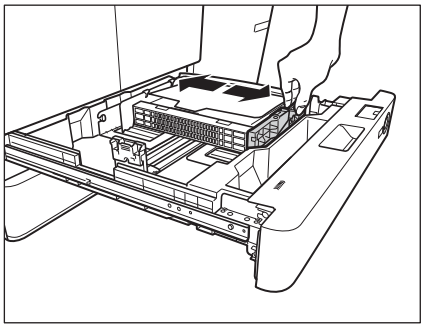

6 Gently push the paper drawer back into the machine until it clicks into place in the closed position.

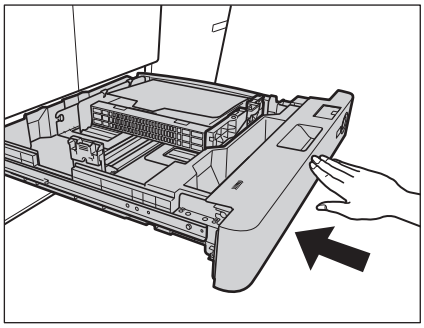

CAUTION

When returning the paper drawer to its original position, be careful not to get your fingers caught, as this may result in personal injury.

IMPORTANT

- Never place paper or any other items in the open part of the paper drawer next to the paper stack. Doing so may cause a paper jam.
- When you are not loading tab paper, make sure to return the tab paper guide to its holder. Using the tab paper guide for storing paper other than tab paper may cause a paper jam.

NOTE

When you load tab, make sure to register the paper type. (See e-Manual > Settings/Registration.)

Paper Deck Unit-A1/POD Deck Lite-A1 (Optional)

If you attach the Paper Deck Unit-A1/POD Deck Lite-A1 to the machine, you have one additional source of paper for printing jobs. The Paper Deck Unit-A1/POD Deck Lite-A1 holds up to 4,000 sheets of paper (64 g/m^2) or 3,500 sheets of paper (80 g/m^2).

IMPORTANT

If the machine is in the Sleep mode (the touch panel is not displayed, and only the main power indicator is lit), you may not be able to open the paper deck. In this case, press the control panel power switch to reactivate the machine, and then press the open button.

NOTE

- The following paper sizes can be loaded in the Paper Deck Unit-A1 and POD Deck Lite-A1:
  - Paper Deck Unit-A1: A4, B5
  - POD Deck Lite-A1: 330 mm × 483 mm, 320 mm × 450 mm (SRA3), 305 mm × 457 mm, A3, B4, A4, A4R, B5

Loading Paper

If you select the paper deck when it has no paper, or if the paper deck runs out of paper during a print job, a screen prompting you to load paper appears on the touch panel display.

Follow the procedure below to load paper into the paper deck.

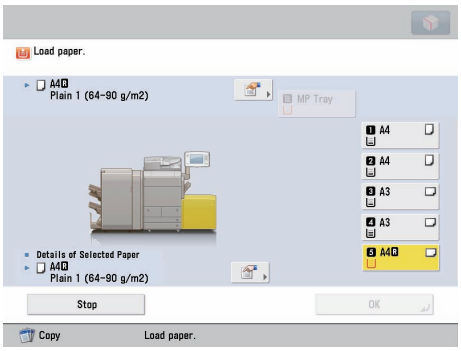

CAUTION

When loading paper, take care not to cut your hands on the edges of the paper.

IMPORTANT

- Never place paper or any other items in the empty part of the paper deck next to the paper stack. Doing so may cause paper jams.
- A paper blower is attached inside the paper deck. Do not insert paper clips or other foreign objects into the blower.
- Paper jams may occur if you load paper into the Paper Deck Unit-A1/POD Deck Lite-A1 in a low humidity environment. If paper jams occur, follow the instructions on the touch panel display to remove the jammed paper. In addition, make sure that the loaded paper is not curled. Paper curls must be straightened out prior to loading.
- A screen prompting you to load paper also appears if the paper deck is not fully inserted to the machine. Make sure that paper deck is properly in place.
- Do not load the following types of paper into the paper deck. Doing so may cause a paper jam.
  - Severely curled or wrinkled paper
  - Thin straw paper
  - Paper which has been printed on using a thermal transfer printer (Do not print on the reverse side of this paper either.)
- Fan the stack of paper well before loading it, and align the edges of the paper stack on a flat surface.
- The Paper Deck Unit-A1 can only accommodate paper from 52 to 220 g/m^2.
- The POD Deck Lite-A1 can only accommodate paper from 52 to 300 g/m^2 in weight.

NOTE

- If a message prompting you to load paper appears during printing, the remaining prints are automatically made after you load the correct paper. If you select another paper source, the remaining prints are made after you press [OK].
- If you want to change the paper loaded in the paper deck from plain to coated paper, wait for the warm air fan to readjust its temperature before you change the paper.

1 Press and release the open button to open the paper deck.

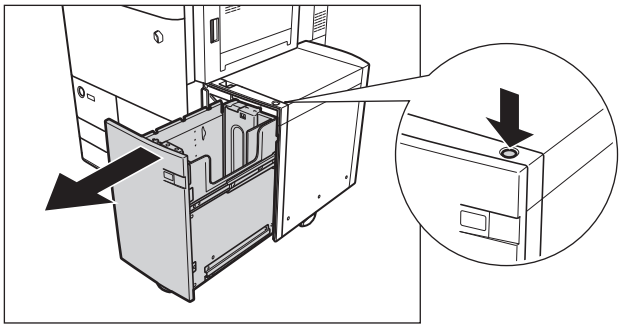

The inside lifter automatically descends to the paper loading position.

2 Open a package of paper, and remove the paper stack.

CAUTION

When loading paper, take care not to cut your hands on the edges of the paper.

IMPORTANT

Rewrap any remaining paper in its original package, and store it in a dry place, away from direct sunlight.

NOTE

- For high-quality printouts, use paper recommended by Canon.
- Before loading paper, always fan the sheets several times, and align the edges to facilitate feeding.

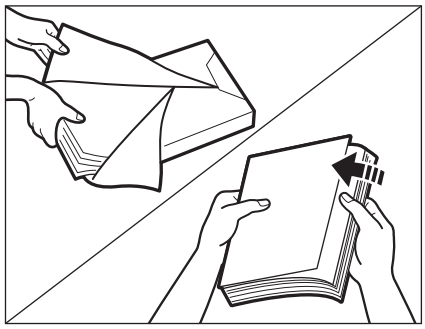

3 Lift the feeding support roller.

If the Paper Deck Unit-A1 is attached, proceed to step 4.

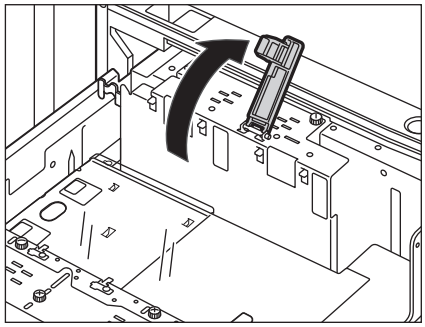

IMPORTANT

- When loading paper, be sure to first lift the feeding support roller. If you load paper without raising the feeding support roller, it may become detached, and paper may not be fed properly.
- Use of the paper deck with the feeding support roller detached, may cause paper jams.

4 Load the paper stack into the paper deck.

Make sure that the inside lifter has lowered before loading paper, even out the edges of the paper stack, and stack the paper neatly against the inner paper guide.

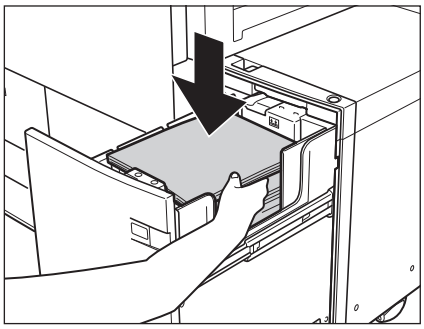

Paper Deck Unit-A1

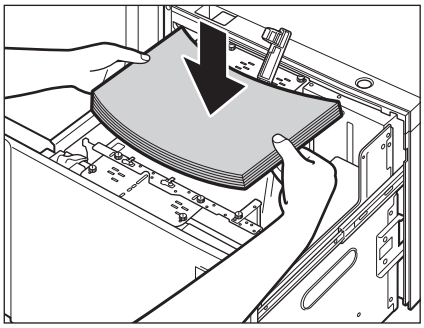

POD Deck Lite-A1

IMPORTANT

- Do not load paper into the paper deck that has previously been printed on, as this may result in a malfunction or damage to the machine. Always use the stack bypass to feed paper when you want to print on the back side of a sheet of paper that already has something printed on its front side (2nd Side of 2-Sided Print).
- Make sure that the size change plate is properly aligned with the marks for the desired paper size. If the size change plate is not properly aligned, the paper deck may become damaged. For more information on aligning the size change plate, see "Changing the Paper Size for the POD Deck Lite-A1," on p. 1-16.
- Paper which has been rolled or curled must be straightened out before loading it into the paper deck.
- Make sure that the height of the paper stack does not exceed the loading limit mark on the inside of the paper deck.

NOTE

- Load the paper stack in stages, adding approximately 600 sheets of paper (64 g/m^2) or 550 sheets of paper (80 g/m^2) at a time. If the paper deck can accommodate more paper, the lifter will descend.
- For instructions on loading transparencies, see "Loading Paper," on p. 1-12.
- Hot air that is blown by the fan may warm the inner size change plate of the POD Deck Lite-A1.
- If there are instructions on the package of paper about which side of the paper to load, follow those instructions.
- When paper is loaded in the paper deck, the side facing up is the one printed on.
- If problems occur, such as poor print quality or paper jams, try turning the paper stack over, and reload it. However, you cannot turn textured or one-sided coated paper over. Change this paper instead.
- For more information on the print direction of preprinted paper (paper which has logos or patterns already printed on it), see Chapter 17, "Appendix," in Getting Started.

5 Lower the feeding support roller.

If the Paper Deck Unit-A1 is attached, proceed to step 6.

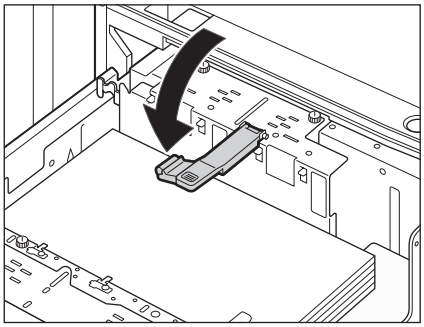

6 Gently push the paper deck back into the machine until it clicks into place in the closed position.

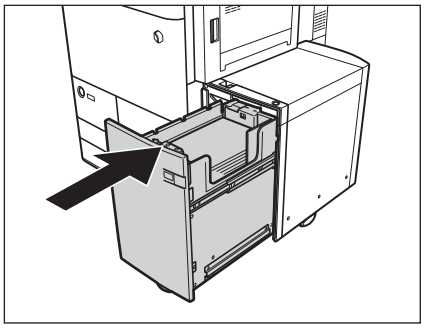

The inside lifter automatically rises, and prepares the paper deck for feeding.

CAUTION

When closing the paper deck, be careful not to get your fingers caught, as this may result in personal injury.

Changing the Paper Size for the POD Deck Lite-A1

This section explains how to change the paper size for the optional POD Deck Lite-A1.

1 **Register the desired paper size for the POD Deck Lite-A1 in [Paper Settings] (Settings/Registration).**

For instructions on registering a paper size for the POD Deck Lite-A1, (See e-Manual > Settings/Registration)

2 **Press the open button to open the paper deck.**

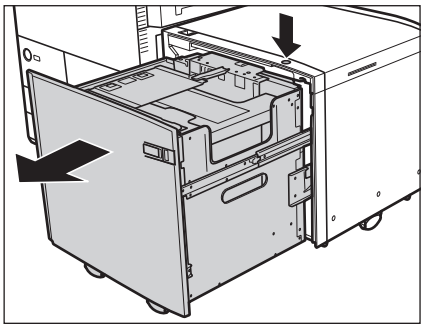

The inside lifter automatically descends to the paper loading position.

3 **Remove all of the loaded paper, the paper size sheet, and deck base plate.**

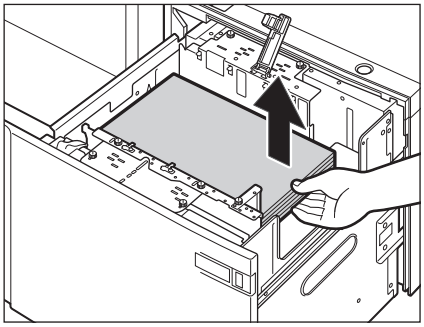

4 **Remove the blue screw on the rear edge retainer using a coin or something similar.**

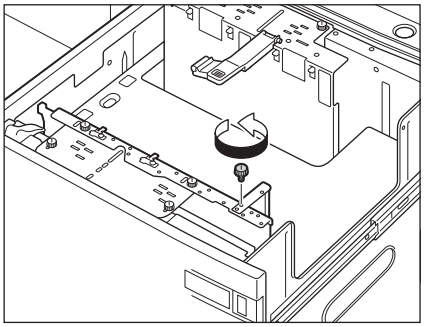

5 Remove the rear edge retainer.

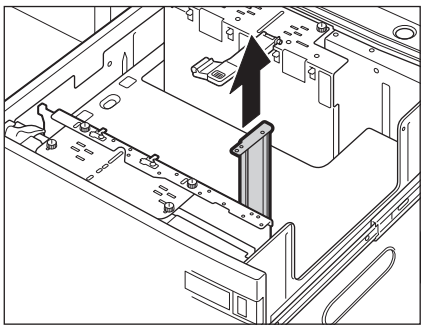

6 Remove the two blue screws on the outer size change plate using a coin or something similar.

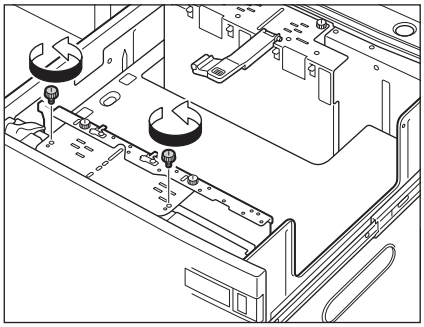

IMPORTANT

Do not loosen or remove any screw other than the two blue screws on the outer size change plate.

7 Remove the outer size change plate.

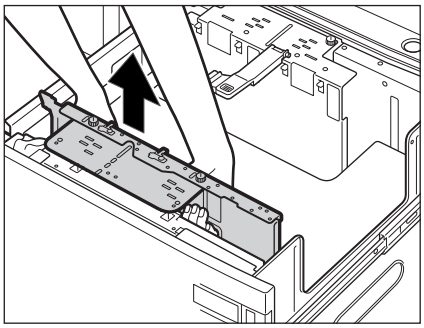

8 Align the outer size change plate with the marks for the desired paper size that you want to load.

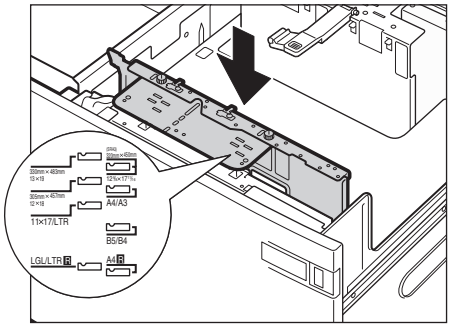

IMPORTANT

- Make sure to align the outer size change plate properly with the marks for the desired paper size. There are two locations with marks for the paper size on the top of the outer size change plate. Align the outer size change plate with the desired marks.
- Make sure that the size change plate is properly aligned with the marks for the desired paper size. If the size change plate is not properly aligned, the pod deck lite may become damaged.

9 Fix the outer size change plate with the two blue screws using a coin or something similar, while slightly holding its center front portion and pressing it towards you.

Fix the screws by turning them in the clockwise direction.

Fasten the left blue screw before fastening the right blue screw.

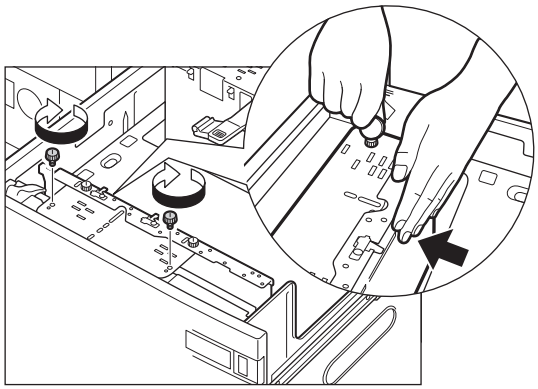

IMPORTANT

If you fasten the blue screws without pressing the outer size change plate towards you, the plate may be fixed at an angle. If you use the paper deck with a tilted outer size change plate, paper may be fed as slanted, poor print quality may result, and paper jams may occur. Therefore, make sure to fasten the blue screw while pressing the outer size change plate towards you.

10 Align the rear edge retainer with the marks for the desired paper size.

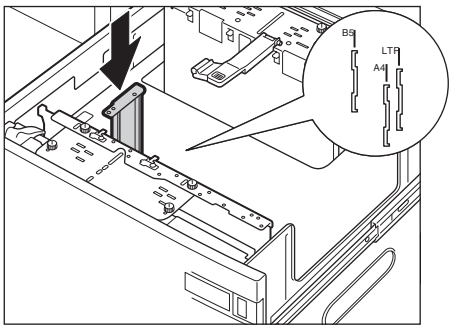

IMPORTANT

If the rear edge retainer is not aligned properly, paper may become jammed, the quality of the image may be degraded, or the inside of the main unit may become dirty. Make sure to load paper with the rear edge retainer properly aligned with the paper size marks on the top and base of the pod deck lite.

11 Fix the rear edge retainer with the blue screw using a coin or something similar.

Fix the screws by turning them in the clockwise direction.

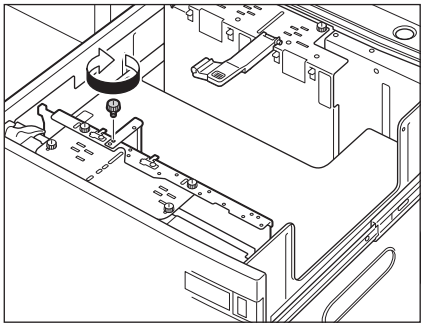

IMPORTANT

There are two screw holes for fastening the rear edge retainer. Make sure that it is fastened properly (aligned with the marks for the desired paper size) to prevent it from being installed at an angle.

12 Remove the two blue screws on the inner size change plate using a coin or something similar.

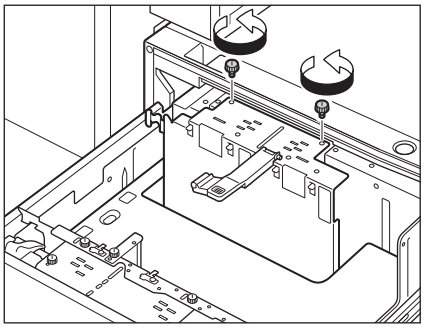

13 Remove the inner size change plate.

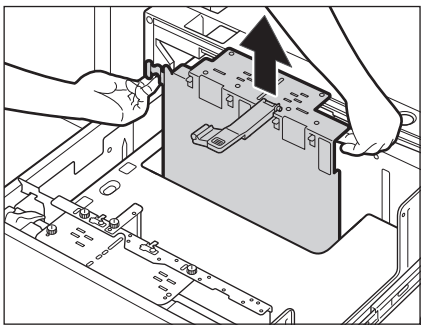

NOTE

Hot air that is blown by the fan may warm the inner size change plate.

14 Align the inner size change plate with the marks for the desired paper size.

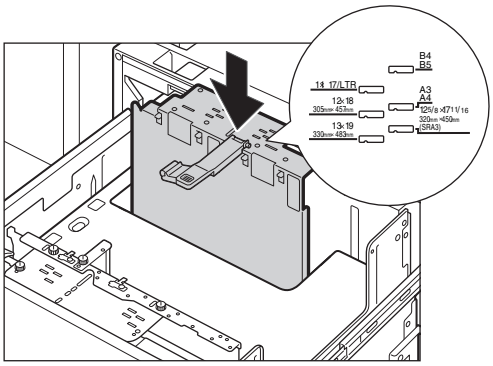

IMPORTANT

- Make sure to align the inner size change plate properly with the marks for the desired paper size. There are two locations with marks for the paper size on the top of the inner size change plate. Align the inner size change plate with the desired marks.
- Make sure that the size change plate is properly aligned with the marks for the desired paper size. If the size change plate is not properly aligned, the pod deck lite may become damaged.

15 Fix the inner size change plate with the two blue screws using a coin or something similar, while slightly holding its center front portion, and pressing it away from you.

Fasten the right blue screw before fastening the left blue screw.

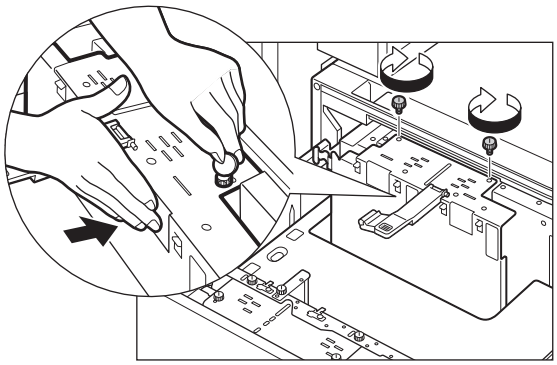

IMPORTANT

- Make sure to align the inner size change plate properly with the marks for the desired paper size. There are two locations with marks for the paper size on the top of the paper deck. Align the inner size change plate with the desired marks.
- Make sure that the size change plate is properly aligned with the marks for the desired paper size. If the size change plate is not properly aligned, the pod deck lite may become damaged.

16 Insert the correct deck base plate that matches the new paper size into the paper deck.

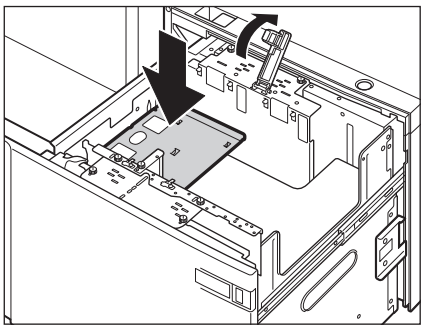

If you are not using the deck base plate, move the paper deck away from the main unit and hang the deck base plate on the hook on the outer left side of the paper deck.

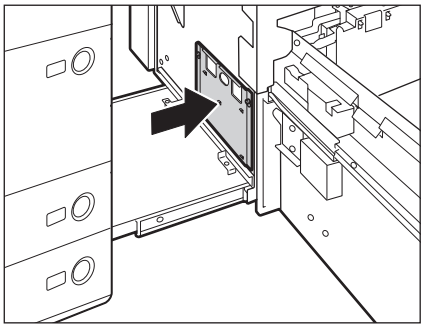

IMPORTANT

- Always use the deck base plate when loading paper into the paper deck. If you load paper without setting the deck base plate, the loaded paper may hang over the lifter, and paper jam may occur.
- Never place the deck base plate in the empty part of the paper deck. Doing so may lead to a malfunction of the machine.

17 Place the paper size sheet that matches the new paper size into the paper deck.

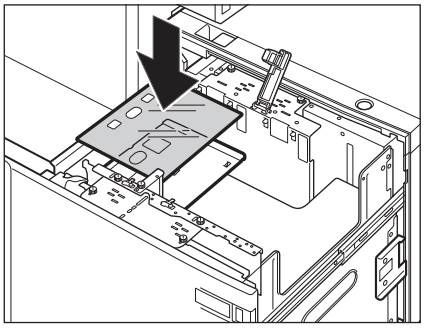

IMPORTANT

Never place the paper size sheet in the empty part of the pod deck lite. Doing so may lead to a malfunction of the machine.

18 Load the paper stack into the paper deck, and then lower the feeding support roller.

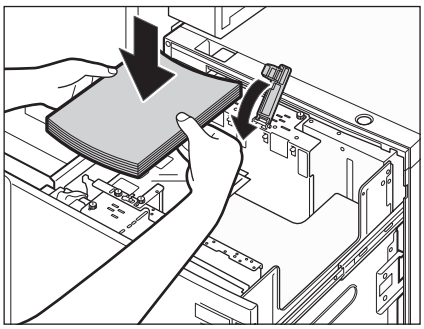

CAUTION

When loading paper, take care not to cut your hands on the edges of the paper.

IMPORTANT

- To load paper larger than A4, first close the pod deck lite to raise the inside lifter, open the pod deck lite, and then load the paper. If you try to load paper larger then A4 when the inside lifter is at its lowest position, the paper may not be loaded properly, and paper jams may occur.
- Never place paper or any other items in the empty part of the pod deck lite. Doing so may lead to a malfunction of the machine.

NOTE

When loading paper, make sure that the height of the paper stack does not exceed 20 mm. If the height of the paper stack exceeds 20 mm, the edges of the paper stack may become curled or creased, and poor print quality may result.

19 Place a magnet label indicating the new paper size on the paper deck.

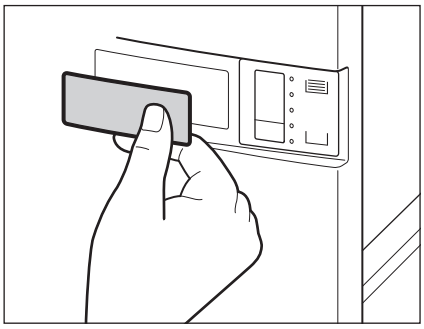

20 Close the paper deck.

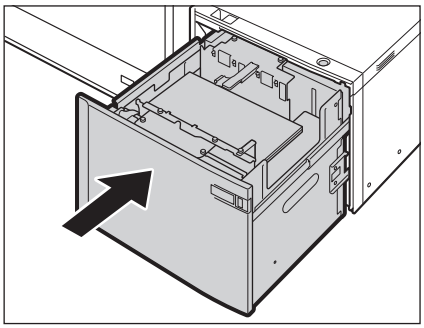

The inside lifter automatically rises, and prepares the paper deck for feeding.

CAUTION

When closing the paper deck, be careful not to get your fingers caught, as this may result in personal injury.

Multi-drawer Paper Deck-A1 (Optional)

If the Multi-drawer Paper Deck-A1 is attached, three paper sources are added to the paper sources of the standard paper deck attached to the machine.

Up to 2,000 sheets of paper (80 g/m^2) each can be loaded into the upper, middle, and lower decks of the Multi-drawer Paper Deck-A1

IMPORTANT

- If the machine is in the Sleep mode (the touch panel is not displayed, and only the main power indicator is lit), you may not be able to open the paper decks even if you press the open button. In this case, press the control panel power switch to reactivate the machine, and then press the open button on the paper decks.
- If you need to lift up the lifter (for example, if you drop objects inside the paper deck), do not lift up the lifter more than 50 mm or diagonally, as this may result in a malfunction or damage to the machine.

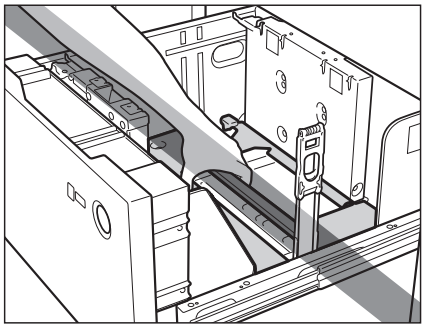

NOTE

The following paper sizes can be loaded into the Multi-drawer Paper Deck-A1: 330 mm × 483 mm, 320 mm × 450 mm (SRA3), 305 mm × 457 mm, A3, B4, A4, A4R, B5, B5R, A5R, and custom size (139.7 mm × 182.0 mm to 330.2 mm × 487.7 mm)

Loading Paper

If you select the optional Multi-drawer Paper Deck-A1 when it has no paper, or if the Multi-drawer Paper Deck-A1 runs out of paper during a print job, a screen prompting you to load paper appears on the touch panel display.

Follow the procedure below to load paper into the Multi-drawer Paper Deck-A1.

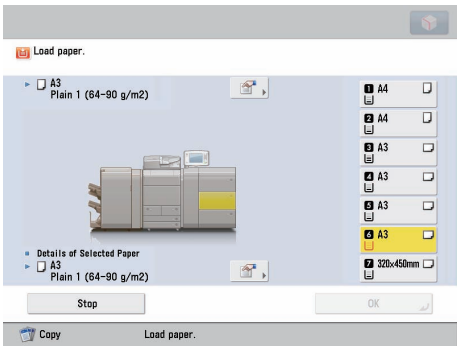

CAUTION

When loading paper, take care not to cut your hands on the edges of the paper.

IMPORTANT

- Never place paper or any other items in the empty part of the paper deck next to the paper stack. Doing so may damage the machine.
- A screen prompting you to load paper also appears if the selected paper deck is not fully inserted into the machine. Make sure that the paper deck is properly in place.
- You can load custom size paper if both of the paper sides are between 182.0 mm and 487.7 mm in length, and between 139.7 mm and 330.2 mm in width. You cannot load custom size paper if either one of the sides is smaller or larger than the paper sizes that can be loaded.
- Do not load the following types of paper into the Multi-drawer Paper Deck-A1. Doing so may cause a paper jam.
  - Severely curled or wrinkled paper
  - Envelopes
  - Thin straw paper
  - Heavy paper (more than 300 g/m^2)
  - Thin paper (less than 52 g/m^2)
  - Paper which has been printed on using a thermal transfer printer. (Do not print on the reverse side of this paper either.)
- Fan the stack of paper well before loading it, and align the edges of the paper stack on a flat surface.
- The Multi-drawer Paper Deck-A1 can only accommodate paper from 52 to 300 g/m^2 in weight.

NOTE

- If a message prompting you to load paper appears during printing, the remaining prints are automatically made after you load the correct paper. If you select another paper source, the remaining prints are made after you press [OK].
- To cancel printing, press [Cancel].
- When changing the paper to load into the Multi-drawer Paper Deck-A1 from plain paper to coated paper, you may wait a moment because temperature control of the warm air which fans a paper is required.

1 Press the button on the paper deck for which you want to load paper.

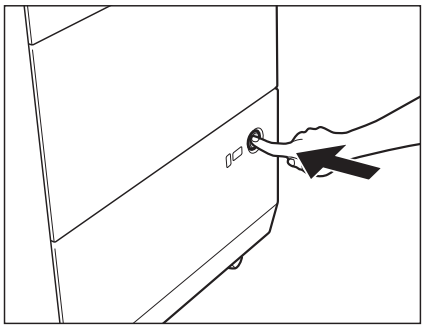

The inside lifter automatically descends to the paper loading position.

NOTE

It may take some time for the paper deck to open, even if you press the open button.

2 Grip the handle, and pull out the paper deck until it stops.

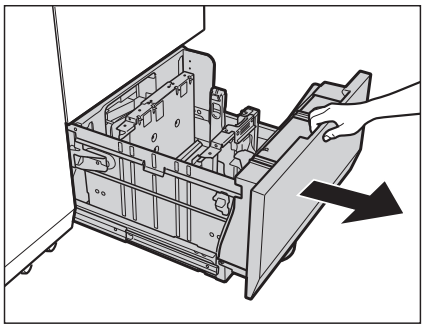

3 Open a package of paper, and remove the paper stack.

CAUTION

When loading paper, take care not to cut your hands on the edges of the paper.

IMPORTANT

Rewrap any remaining paper in its original package, and store it in a dry place, away from direct sunlight.

NOTE

- For instructions on loading tab paper into the paper deck, see "Loading Tab Paper," on p. 1-8.
- For instructions on loading transparencies, see "Loading Transparencies," on p. 1-8.
- For high-quality printouts, use paper recommended by Canon.
- Before loading paper, always fan the sheets several times, and align the edges to facilitate feeding.

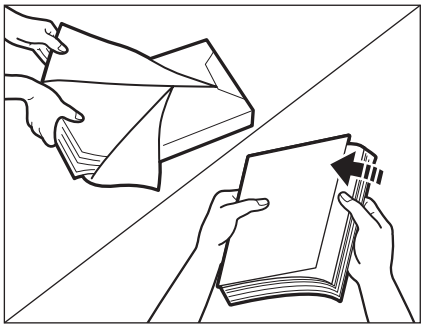

4 Load the paper stack into the paper deck.

Even out the edges of the paper stack. Load the paper stack against the left wall of the paper deck.

When loading paper into the paper deck for the first time, adjust the size change plate to match the paper size being loaded. (See "Changing the Paper Size for the Multi-drawer Paper Deck-A1," on p. 1-27.)

When loading paper into the paper deck, make sure that the paper size setting is the same size of the paper that is being loaded.

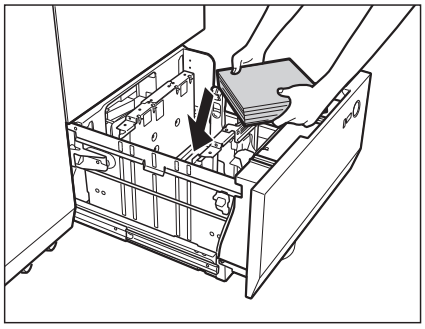

Load the paper below the rollers of the paper holder.

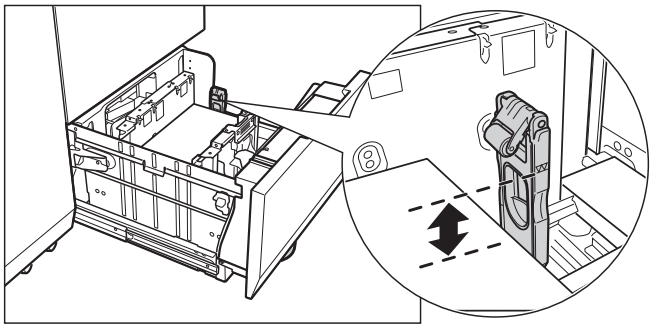

IMPORTANT

Do not subject the paper holder plate to shock when loading paper into the paper deck, as this may result in a malfunction or damage to the machine.

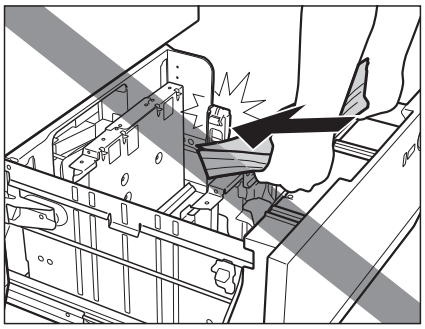

IMPORTANT

- Paper which has been rolled or curled must be straightened out before loading it into the paper deck.
- Make sure that the height of the paper stack does not exceed the loading limit mark on the inside of the paper deck.

NOTE

- If there are instructions on the package of paper about which side of the paper to load, follow those instructions.
- When paper is loaded, the side facing up is the one printed on.
- If problems occur, such as poor print quality or paper jams, try turning the paper stack over, and reload it. However, textured paper, single-sided coated paper, and paper already printed on cannot be turned over. Change to new paper.
- When loading paper, make sure that the height of the paper stack does not exceed 20 mm. If the height of the paper stack exceeds 20 mm, the edges of the paper stack may become curled or creased, and poor print quality may result.

5 Gently push the paper deck back into the machine until it clicks into place in the closed position.

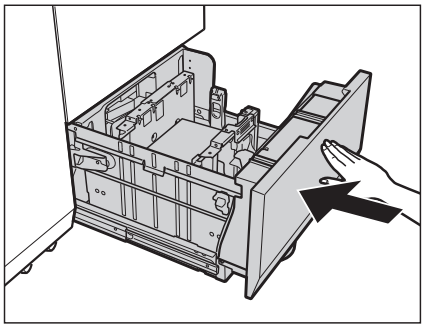

The inside lifter automatically rises, and prepares the paper deck for printing.

CAUTION

When returning the paper deck to its original position, be careful not to get your fingers caught, as this may result in personal injury

IMPORTANT

You will not be able to make copies or print if you load paper that exceeds the loading limit, or if the paper deck is not completely pushed into the machine.

NOTE

If paper runs out during copying or printing, load new paper stack, and follow the instructions on the touch panel display. The machine automatically restarts, and produces the remaining copies or prints.

Changing the Paper Size for the Multi-drawer Paper Deck-A1

This section explains how to change the paper size for the optional Multi-drawer Paper Deck-A1.

1 **Press the button on the paper deck that you want to adjust, and pull out the paper deck until it stops. Slide the paper holder plate until it does not catch on the paper to set, and remove all of the remaining paper.**

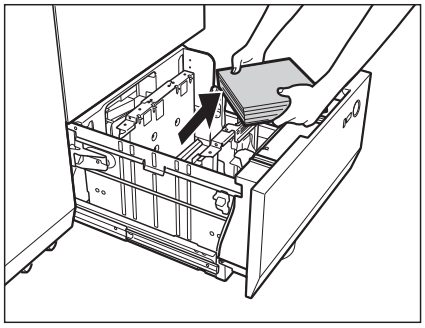

The paper holder plate slides by holding as the diagram shows.

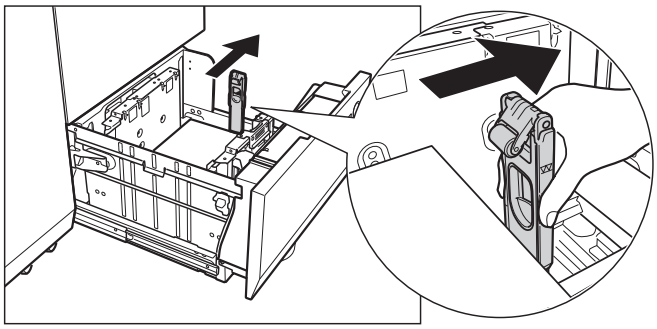

NOTE

It may take some time for the paper deck to open, even if you press the open button.

2 **Squeeze the lever, as shown below. Without releasing the lever, slide the outer size change plate and inner size change plate until it does not catch on the paper to set.**

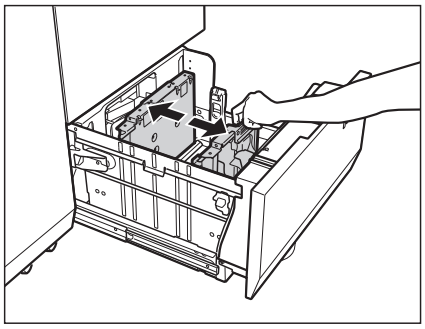

3 **Load the desired paper to approximately 10 mm in height. Slide the outer size change plate and inner size change plate to align them with the desired paper size.**

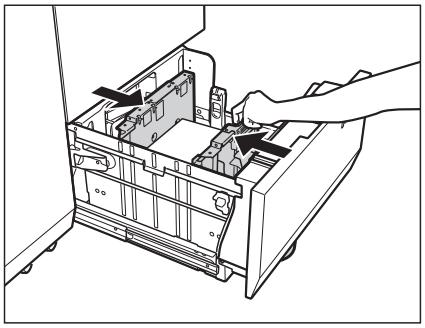

If you use a paper which length of the parallel edge to the feeding direction is longer than 457.2 mm, slide the paper holder plate to the right edge, press the button on the paper holder plate, and then fold down the paper holder plate.

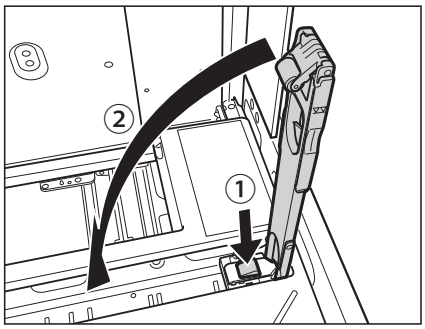

If the paper holder plate is folded down, proceed to step 6.

IMPORTANT

Do not subject the paper holder plate to shock when loading paper into the paper deck, as this may result in a malfunction or damage to the machine.

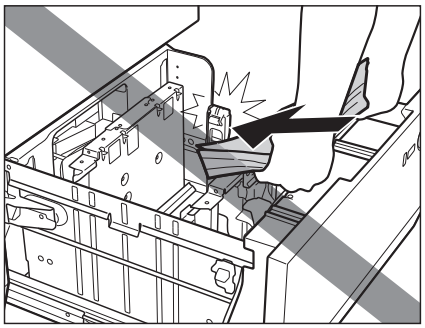

IMPORTANT

Adjust the guides correctly to avoid causing a paper jam, dirty prints, or making the inside of the machine dirty.

4 Slide the paper holder plate to align it with the desired paper size, as shown below.

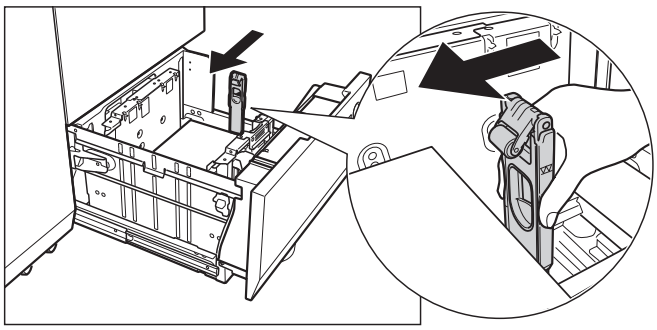

5 Load all remaining paper whose size you want to change into the paper deck.

Load the paper below the loading limit of the paper holder plate.

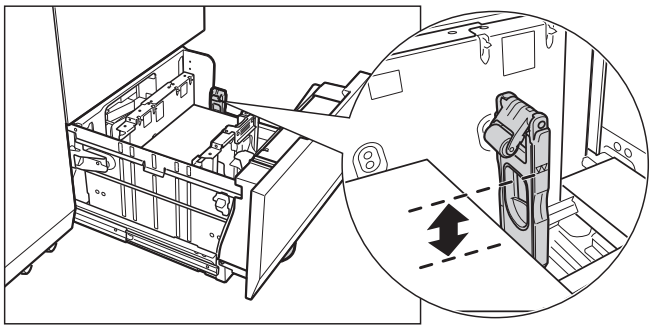

CAUTION

When loading paper into the paper deck, take care not to cut your hands on the edges of the paper.

IMPORTANT

- Paper which has been rolled or curled must be straightened out before loading it into the paper deck.
- Make sure that the height of the paper stack does not exceed the loading limit mark on the inside of the paper deck.
- Never place paper or any other items in the empty part of the paper deck next to the paper stack. Doing so may damage the machine.

NOTE

- If there are instructions on the package of paper about which side of the paper to load, follow those instructions.
- When paper is loaded, the side facing up is the one printed on.
- If problems occur, such as poor print quality or paper jams, try turning the paper stack over, and reload it. However, textured paper, single-sided coated paper, and paper already printed on cannot be turned over. Change to new paper.
- When loading paper, make sure that the height of the paper stack does not exceed 20 mm. If the height of the paper stack exceeds 20 mm, the edges of the paper stack may become curled or creased, and poor print quality may result.

6 Change the paper deck's size plate to match the new paper size.

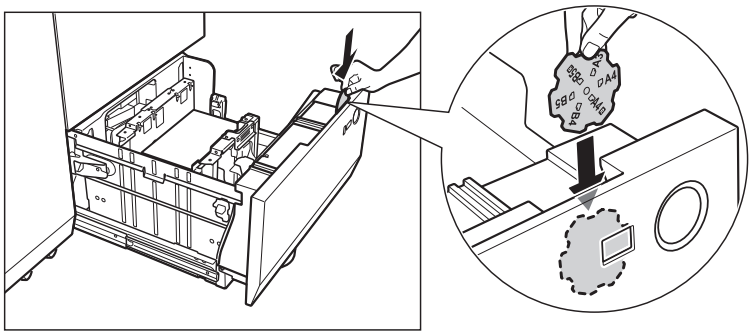

7 Gently push the paper deck back into the machine until it clicks into place in the closed position.

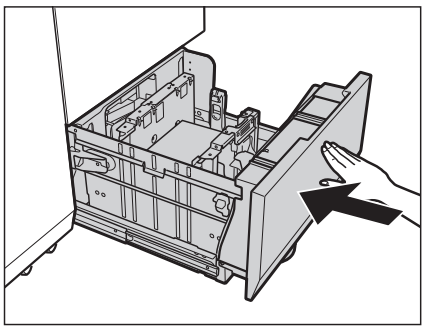

The inside lifter automatically rises, and prepares the paper deck for printing.

CAUTION

When returning the paper deck to its original position, be careful not to get your fingers caught, as this may result in personal injury.

Document Insertion Unit-H1 (Optional).

This section describes how to load paper into the Document Insertion Unit-H1.

Loading Paper

This section describes the procedure for feeding sheets using the Document Insertion Unit-H1.

1 Adjust the slide guides to fit the paper size.

● **To use the upper tray:**

☐ Adjust the slide guide.

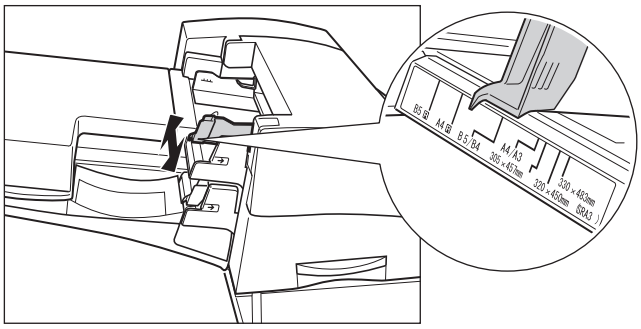

● **To use the lower tray:**

☐ Open the tray cover.

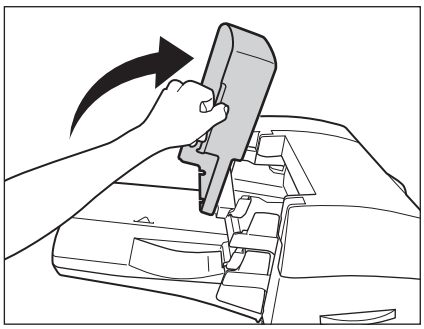

☐ Adjust the slide guide.

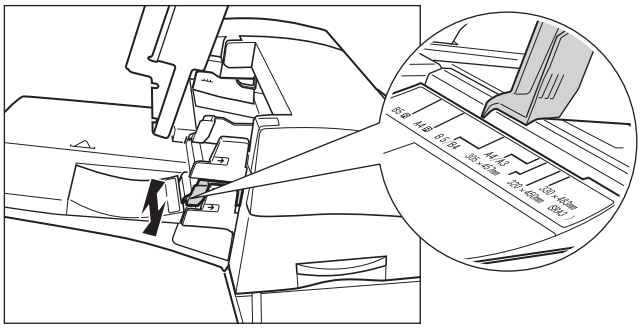

2 Open a package of paper, and remove the paper stack.

CAUTION

When loading paper, take care not to cut your hands on the edges of the paper.

IMPORTANT

Rewrap any remaining paper in its original package, and store it in a dry place, away from direct sunlight.

NOTE

- For instructions on loading tab paper into the paper deck, see "Loading Tab Paper," on p. 1-8.
- For high-quality printouts, use paper recommended by Canon.
- Before loading paper, always fan the sheets several times, and align the edges to facilitate feeding. Also, you should always fan paper that has just been removed from a newly opened paper package.

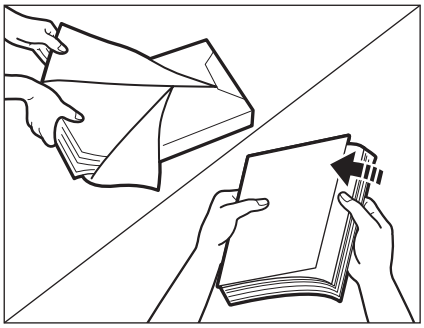

3 Load the paper stack into the Document Insertion Unit.

CAUTION

Make sure that the height of the paper stack does not exceed the loading limit mark ▼▼▼ at the back of the paper supply tray.

NOTE

- You cannot make copies or prints on paper that is loaded in the document insertion unit.
- You can load 330 mm × 483 mm, 320 mm × 450 mm (SRA3), 305 mm × 457 mm, A3, B4, A4, A4R, B5, B5R, and custom size (182.0 mm × 182.0 mm to 330.2 mm × 487.7 mm) into the trays of the Document Insertion Unit.
- A maximum of 200 sheets of paper (80 g/m^2) can be loaded in the trays of the Document Insertion Unit.

● If you want to load paper into the upper tray:

☐ Load the paper face up.

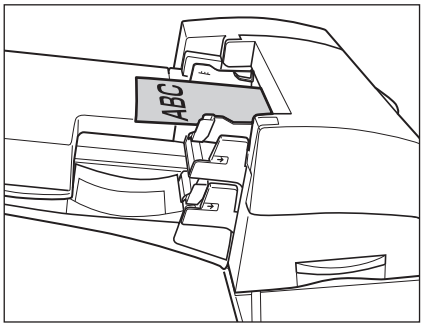

● **If you want to load paper into the lower tray:**

☐ Load the paper face up.

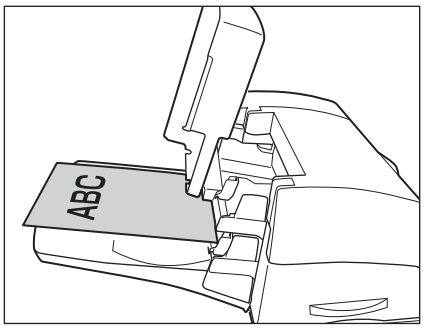

☐ Close the tray cover.

4 Select the desired paper size → press [Next].

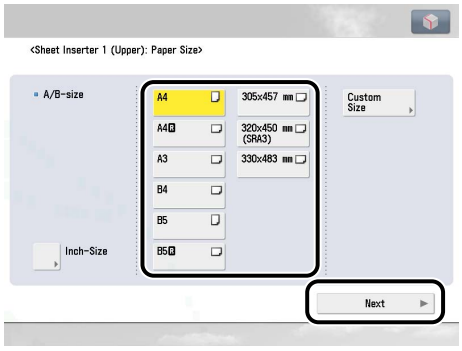

IMPORTANT

Select the same paper size that is loaded in the Document Insertion Unit.

NOTE

To select an inch paper size, press [Inch-Size].

5 Select the desired paper type → press [OK].

Document Insertion/Folding Unit-G1/Document Insertion Unit-J1 (Optional)

This section describes how to load paper into the Document Insertion/Folding Unit-G1/Document Insertion Unit-J1.

Loading Paper

Follow the procedure below to load paper into the Document Insertion/Folding Unit-G1/Document Insertion Unit-J1.

1 Adjust the slide guides to fit the paper size.

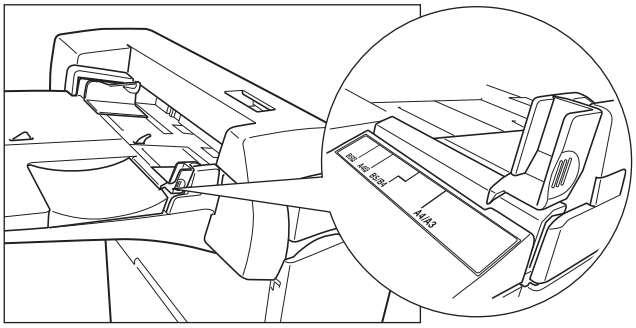

2 Load the paper stack into the document insertion unit.

Load the paper face up.

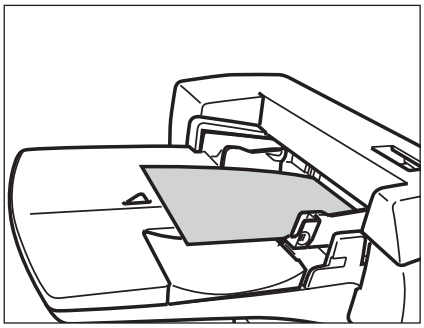

IMPORTANT

Before loading paper, always fan the sheets several times, and align the edges to facilitate feeding.

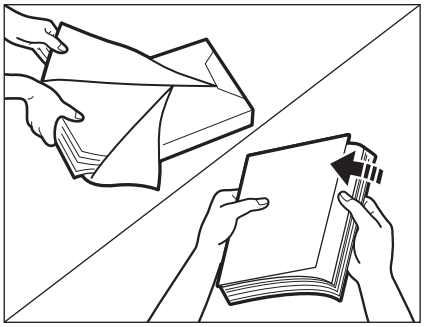

NOTE

- Only load paper for use as a cover.
- You cannot make copies or prints on paper that is loaded in the document insertion unit.
- You can load 330 mm × 483 mm, 320 mm × 450 mm (SRA3), 305 mm × 457 mm, A3, B4, A4, A4R, B5, B5R.
- A maximum of 100 sheets of paper (80 g/m^2) can be loaded in the tray of the document insertion unit.

3 Select the desired paper size → press [Next].

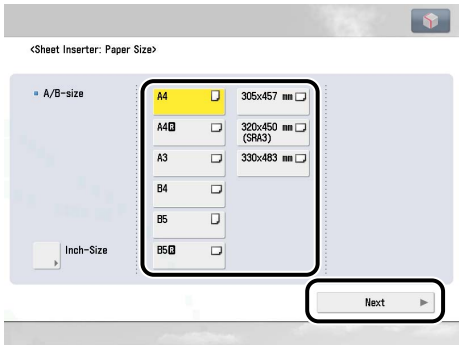

IMPORTANT

Select the same paper size that is loaded in the document insertion unit.

NOTE

To select an inch paper size, press [Inch-Size].

4 Select the desired paper type → press [OK].

IMPORTANT

When printing on special types of paper, such as heavy paper, be sure to correctly set the paper type. If the type of paper is not set correctly, it could adversely affect the quality of the image. Moreover, the fixing unit may become dirty and require a service repair, or the paper could jam.

NOTE

For more information on available paper stock that can be loaded into the Document Insertion/Folding Unit-G1/Document Insertion Unit-J1, see e-Manual > Basic Operations.

Feeder

Replace the stamp cartridge when this mark is faint or no longer visible.

IMPORTANT

When replacing the stamp cartridge, take care not to allow ink to come into contact with your hands or clothing. If ink gets onto your hands or clothing, wash it off immediately with cold water.

Replacing the Stamp Cartridge

1 **Open the feeder.**

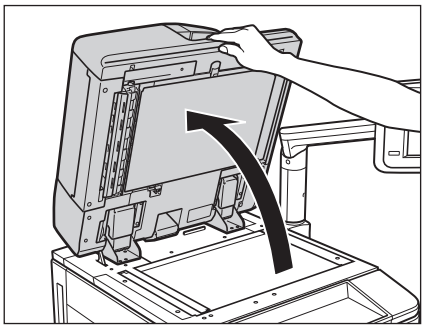

2 **Pull the lever above the feeder, and open the document scan cover.**

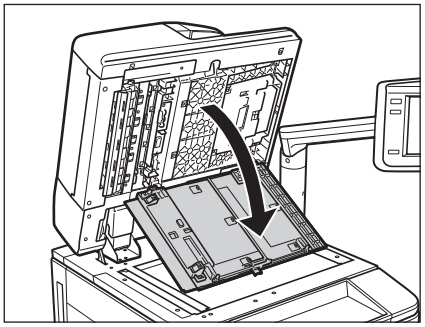

CAUTION

Open the document scan cover carefully, as not to scratch the platen glass.

3 **Open the stamp cover.**

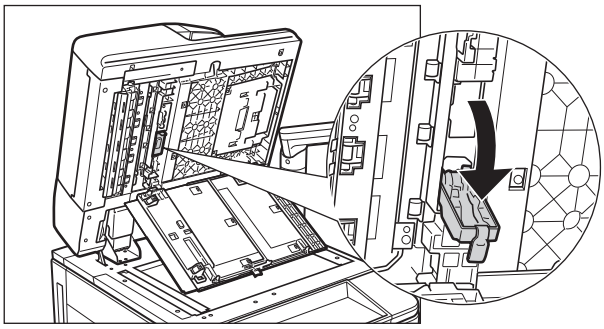

4 Remove the old stamp cartridge, using tweezers.

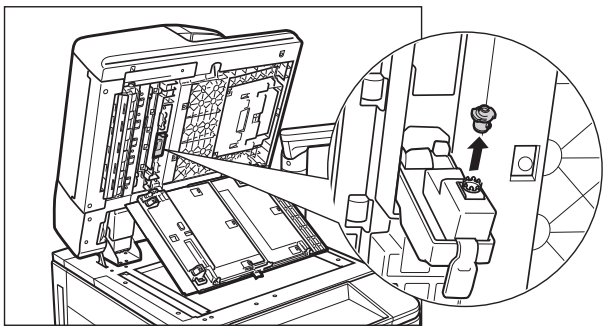

5 Push in the new stamp cartridge until it clicks, using tweezers.

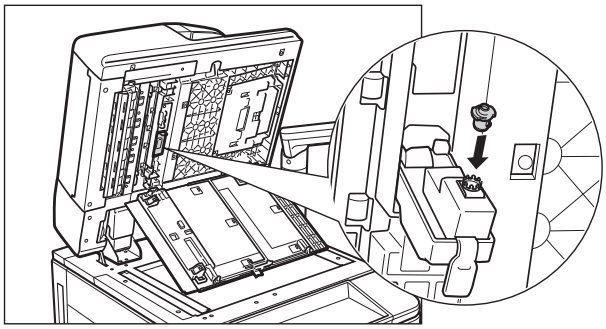

IMPORTANT

- Make sure that the stamp cartridge is not protruding from the surface.
- Insert the stamp cartridge properly, or paper jams may occur.

6 Close the stamp cover.

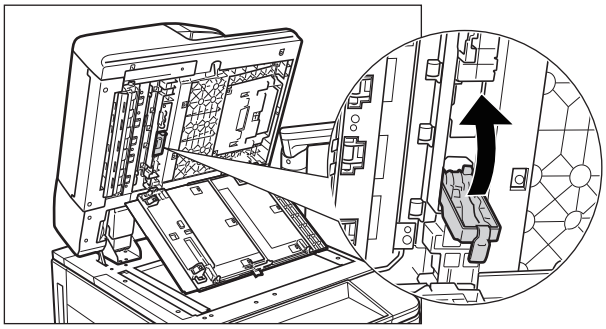

CAUTION

When closing the covers, be careful not to get your fingers caught, as this may result in personal injury.

7 Close the cover of the document scanning area until it clicks.

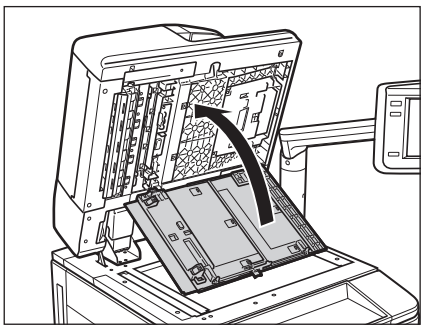

CAUTION

When closing the covers, be careful not to get your fingers caught, as this may result in personal injury.

8 Close the feeder.

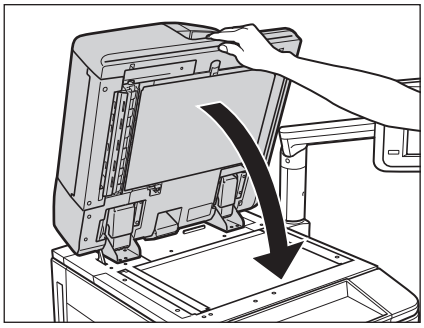

CAUTION

- **When closing the feeder, be careful not to get your fingers caught, as this may result in personal injury.**
- **Be aware that the light emitted from the platen glass may be very bright when closing the feeder.**

Staple Finisher-A1/Booklet Finisher-A1/Puncher Unit-BG1/BH1/Inner Booklet Trimmer-A1 (Optional)

This section describes the procedure for replacement the staple cartridge and removing trim waste from the Booklet Finisher-A1 when the Inner Booklet Trimmer-A1 is installed, and removing punch waste from the Puncher Unit-BG1/BH1.

Replacing the Staple Cartridge in the Stapler Unit

When the Staple Finisher-A1/Booklet Finisher-A1 is almost out of staples and the staple cartridge in the stapler unit must be replaced, a screen prompting you to replace the staple cartridge appears on the touch panel display. Follow the procedure described below to replace the staple cartridge.

Use only staple cartridges intended for use in this machine. See e-Manual > Optional Products (imageRUNNER ADVANCE C9075 PRO/C9065 PRO).

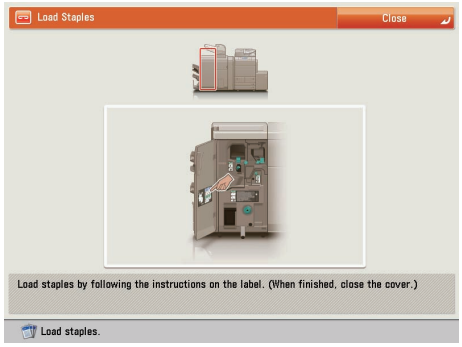

IMPORTANT

Take care when handling the optional equipment that is attached to the machine. When an optional unit's cover is opened to replace a staple cartridge, discard the punch waste, discard the trim waste or clear paper or staple jams, prints may still be output if other optional units are operating normally, and are not involved in the paper or staple jam removal procedure.

NOTE

- We recommend that you order staple cartridges from your local authorized Canon dealer before your stock runs out.
- Remove the orange seal that holds the staples together after you place the staple cartridge into the staple case.

1 **Open the front cover of the finisher.**

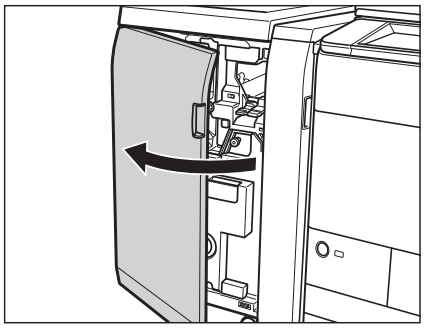

2 Pull out the staple case from the stapler unit, holding it by its green tab.

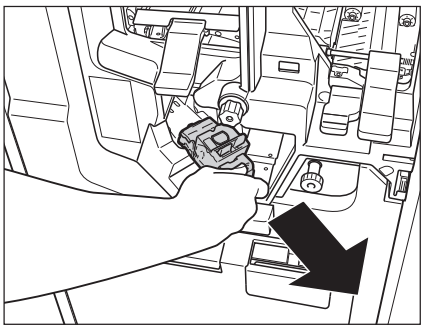

3 Turn over the staple case, and open the cover while pressing PUSH on both sides of the staple case.

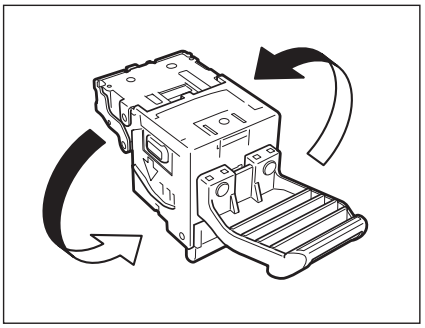

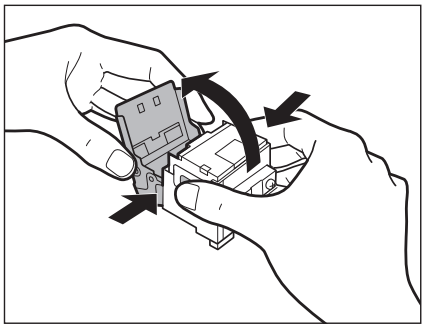

NOTE

- Align the staple case as indicated in the diagram.
- The cover will not open if there are any staples remaining, even if you press PUSH on both sides of the staple case.

4 Remove the staple case by pulling it out.

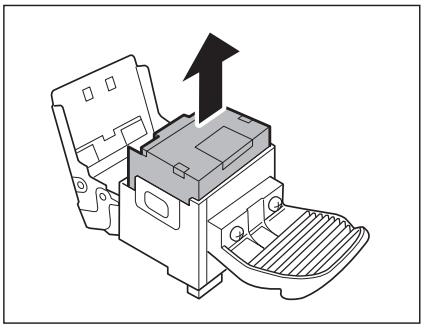

5 Insert the new staple case.

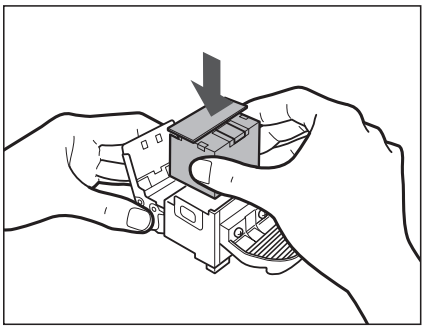

6 Remove the white seal fixing the staples by pulling it straight out.

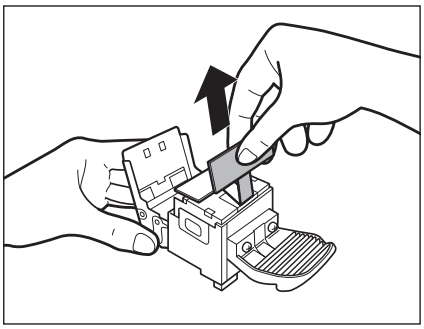

IMPORTANT

Make sure that you pull the seal straight out. If you pull it out at an angle, it may tear.

7 Close the staple case cover.

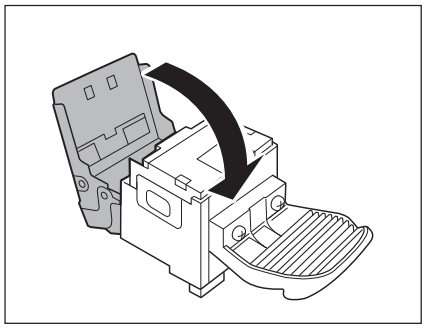

8 Gently push the staple case into the stapler unit, until it is securely in place.

Always make sure to insert the staple case far as it can go.

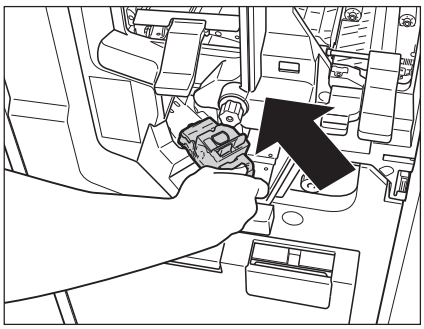

9 Close the front cover of the finisher.

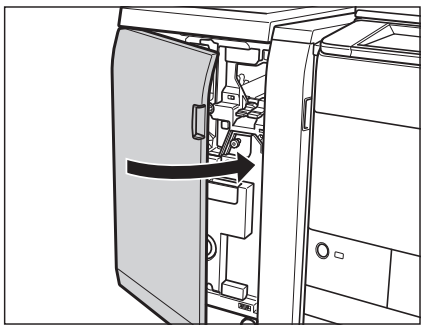

CAUTION

When closing the front cover of the finisher, be careful not to get your fingers caught, as this may result in personal injury.

Removing Trim Waste

When the trim waste tray of the Inner Booklet Trimmer-A1 becomes full, a screen prompting you to remove the trim waste appears on the touch panel display. Follow the procedure described below to remove the trim waste.

IMPORTANT

- Take care when handling the optional equipment that is attached to the machine. When an optional unit's cover is opened to replace a staple cartridge, discard the punch waste, discard the trim waste, or clear paper or staple jams, prints may still be output if other optional units are operating normally, and are not involved in the paper or staple jam removal procedure.
- When the trim waste tray is full, you cannot make copies or prints using the Trim mode.

NOTE

This procedure is necessary only if the Inner Booklet Trimmer-A1 is attached to the Booklet Finisher-A1.

1 Open the front cover of the finisher.

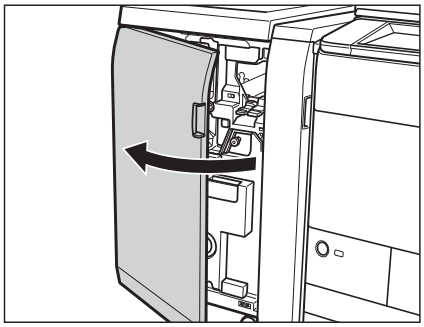

2 Pull out the trim waste tray.

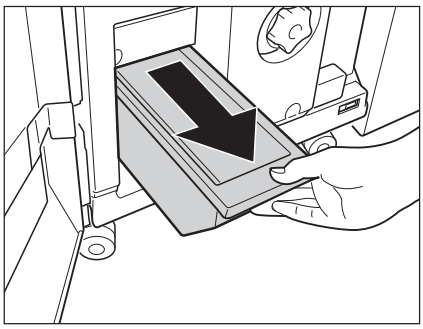

3 Discard the trim waste into a receptacle.

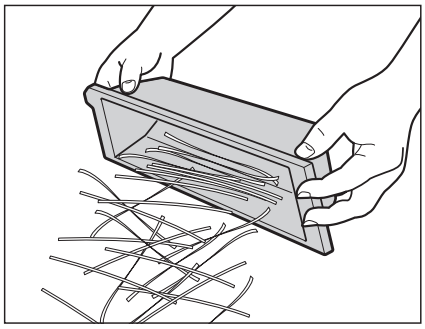

IMPORTANT

Make sure that the trim waste tray is completely emptied.

4 Return the trim waste tray to its original position.

Always make sure to insert the trim waste tray far as it can go.

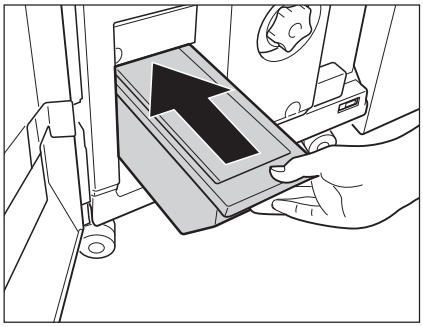

5 **Close the front cover of the finisher.**

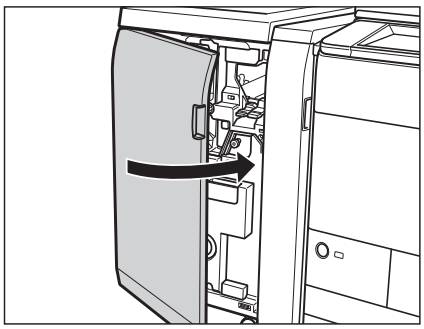

CAUTION

When closing the front cover of the finisher, be careful not to get your fingers caught, as this may result in personal injury.

Replacing the Staple Cartridge in the Saddle Stitcher Unit

When the saddle stitcher unit of the Booklet Finisher-A1 is almost out of staples and the staple cartridge in the saddle stitcher unit must be replaced, a screen prompting you to replace the staple cartridge appears on the touch panel display. Follow the procedure described below to replace the staple cartridge.

Use only staple cartridges intended for use in this machine. See e-Manual > Optional Products (imageRUNNER ADVANCE C9075 PRO/C9065 PRO).

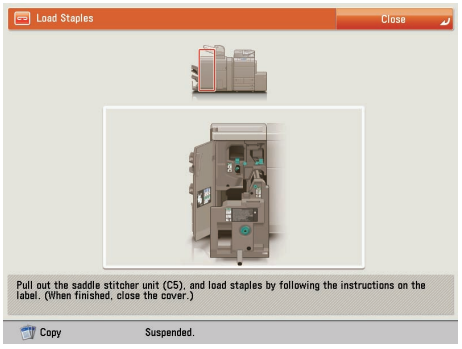

IMPORTANT

- Take care when handling the optional equipment that is attached to the machine. When an optional unit's cover is opened to replace a staple cartridge, discard the punch waste, discard the trim waste, or clear paper or staple jams, prints may still be output if other optional units are operating normally, and are not involved in the paper or staple jam removal procedure.
- If necessary, remove all of the output paper in the Booklet Tray before replacing the staple cartridge in the saddle stitcher unit.
- This procedure is necessary only if the Booklet Finisher-A1 is attached.

NOTE

Since both the front and inner staple cartridges need to be replaced when staples run out in the saddle stitcher unit, we recommend that you order staple cartridges from your local authorized Canon dealer before your stock runs out.

1 **Open the front cover of the finisher.**

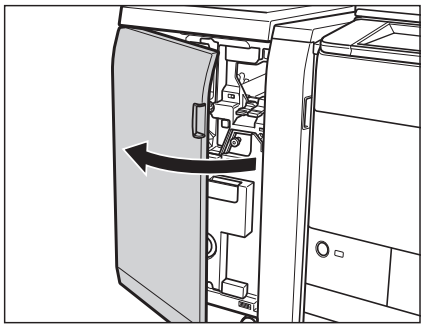

2 **Pull out the saddle stitcher unit (F-C5).**

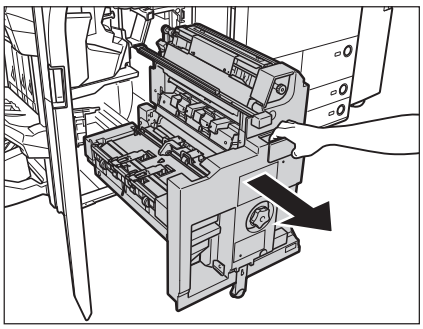

3 **Pull out the staple case, holding it by its tab.**

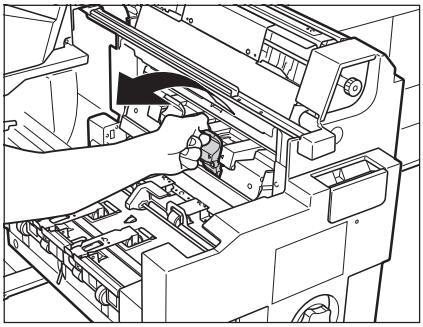

4 **Press the light blue area on both sides of the staple cartridge, and then open the staple case cover.**

Hold the staple case cover by its left and right sides, and then lift it and slide it off.

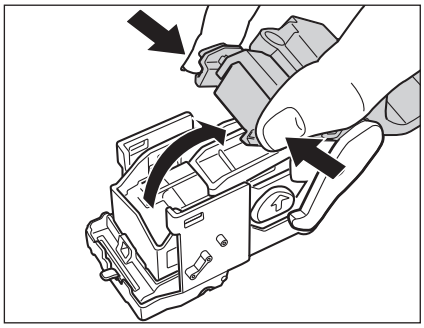

5 Lift and pull out the empty staple cartridge.

Squeeze the arrow indicated in step 4 (and its twin on the opposite side) to release the empty staple cartridge.

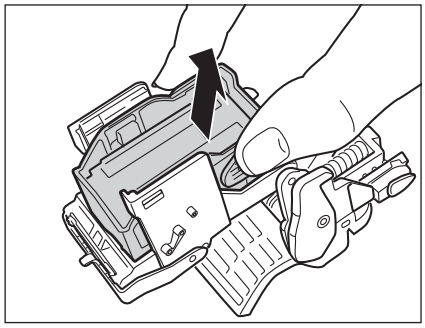

6 Insert the new staple cartridge until it clicks into place.

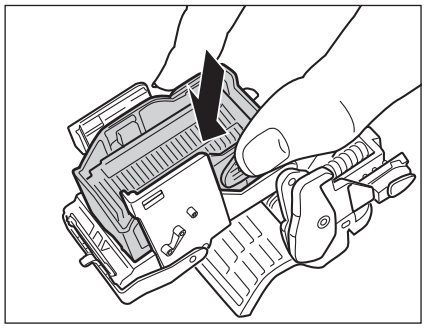

IMPORTANT

When replacing the staple cartridges, replace both the front and back staple cartridges.

7 Close the staple case cover.

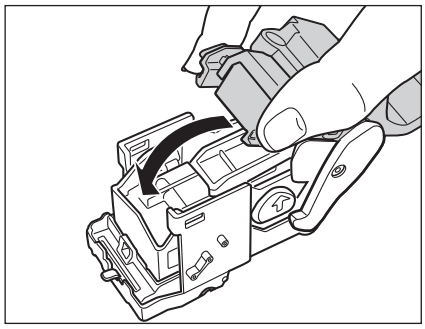

8 Return the staple case to its original position in the saddle stitcher unit, making sure to align the arrow on the staple case with the arrow on the saddle stitcher unit, as shown below.

When returning the staple case, always make sure to the staple case is inserted until the arrows are aligned as shown in the diagram.

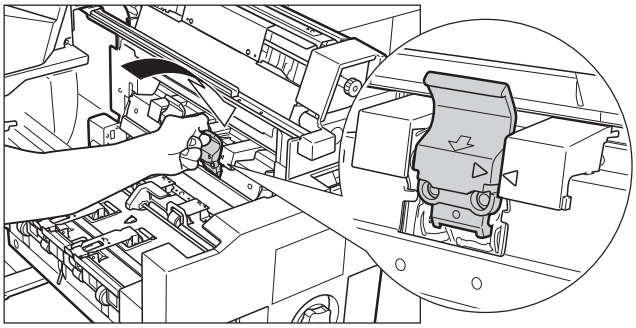

IMPORTANT

Follow steps 3 to 7 to replace the other staple cartridge in the saddle stitcher unit.

9 Gently push the saddle stitcher unit back into the machine.

Always make sure to insert the saddle stitcher far as it can go.

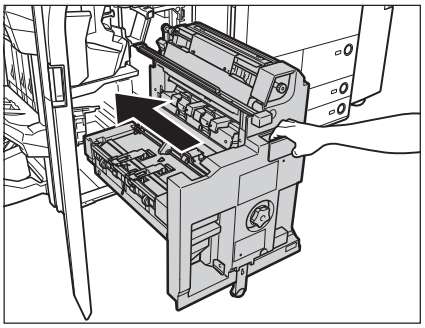

CAUTION

When returning the saddle stitcher unit to its original position, be careful not to get your fingers caught, as this may result in personal injury.

10 Close the front cover of the finisher.

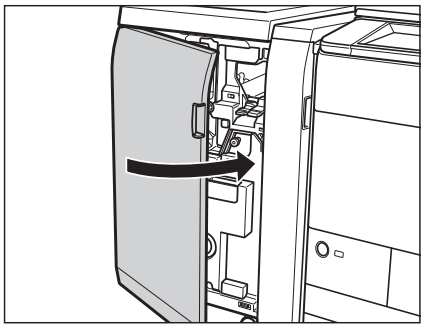

CAUTION

When closing the front cover of the finisher, be careful not to get your fingers caught, as this may result in personal injury.

Removing Punch Waste

When the punch waste tray of the Puncher Unit-BG1/BH1 becomes full, a screen prompting you to remove the punch waste appears on the touch panel display. Follow the procedure described below to remove the punch waste.

IMPORTANT

- Take care when handling the optional equipment that is attached to the machine. When an optional unit's cover is opened to replace a staple cartridge, discard the punch waste, discard the trim waste, or clear paper or staple jams, prints may still be output if other optional units are operating normally, and are not involved in the paper or staple jam removal procedure.
- When the punch waste tray is full, you cannot make copies or prints using the Hole Punch mode.

NOTE

This procedure is necessary only if the Puncher Unit-BG1/BH1 is attached.

1 **Open the front cover of the finisher.**

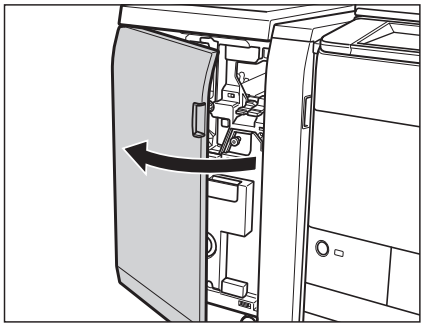

2 **Pull out the punch waste tray.**

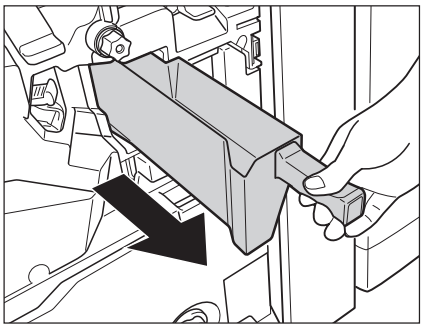

3 Discard the punch waste into a receptacle.

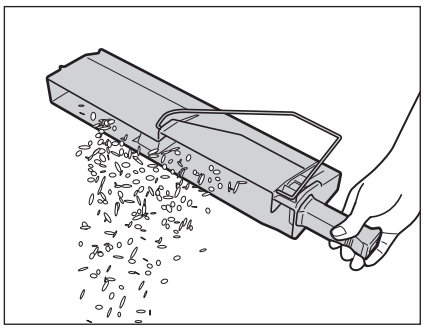

IMPORTANT

Make sure that the punch waste tray is completely emptied.

4 Return the punch waste tray to its original position.

Always make sure to insert the punch waste tray far as it can go.

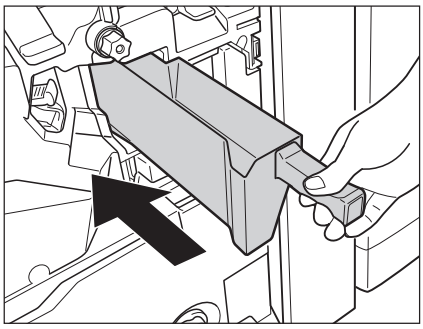

NOTE

If the punch waste tray is not securely in place, you cannot make copies or prints in the Hole Punch mode.

5 Close the front cover of the finisher.

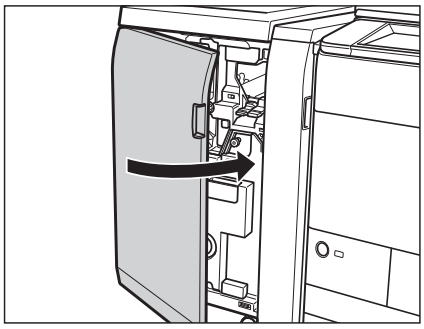

CAUTION

When closing the front cover of the finisher, be careful not to get your fingers caught, as this may result in personal injury.

Staple Finisher-B1/Booklet Finisher-B1/Puncher (Optional)

This section describes the procedure for replacing the staple cartridge in the Staple Finisher-B1/Booklet Finisher-B1, and how to remove the punch waste from the Puncher.

Replacing the Staple Cartridge in the Stapler Unit

When the Staple Finisher-B1/Booklet Finisher-B1 is almost out of staples and the staple cartridge in the stapler unit must be replaced, a screen prompting you to replace the staple cartridge appears on the touch panel display. Follow the procedure described below to replace the staple cartridge.

Use only staple cartridges intended for use with this machine. See e-Manual > Optional Products (imageRUNNER ADVANCE C7065/C7055).

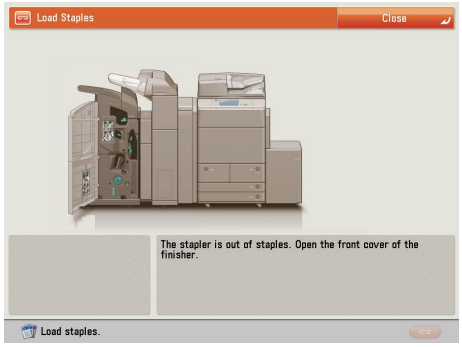

NOTE

- We recommend that you order staple cartridges from your local authorized Canon dealer before your stock runs out.
- Remove the orange seal that holds the staples together after you place the staple cartridge into the staple case.

1 **Open the front cover of the finisher.**

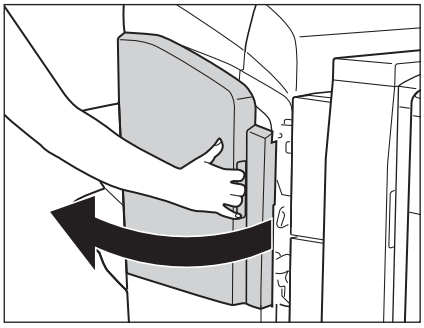

Staple Finisher-B1

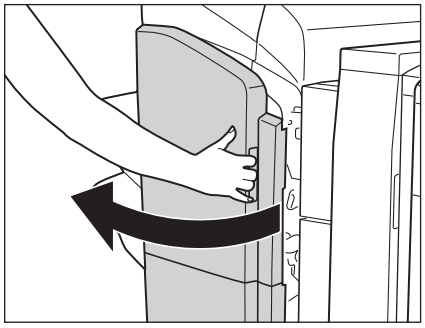

Booklet Finisher-B1

2 **Lift and pull out the staple case from the stapler unit, holding it by its green tab.**

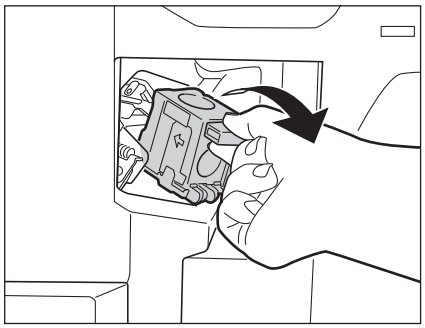

3 Press the area indicated by PUSH, and then lift up the staple cartridge.

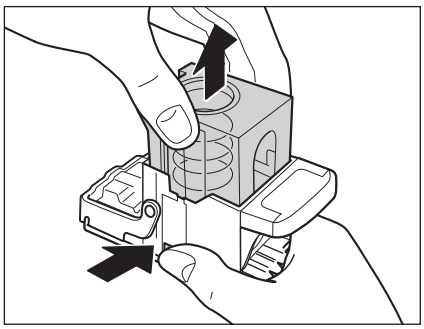

4 Pull out the staple cartridge.

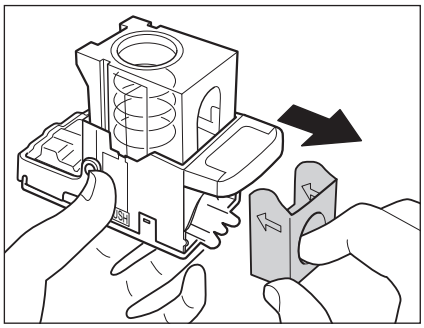

5 Insert the new staple cartridge.

Press the spring-loaded case down until it clicks into place.

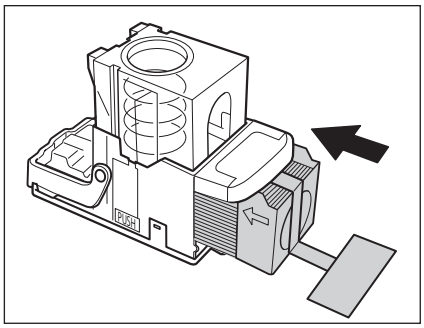

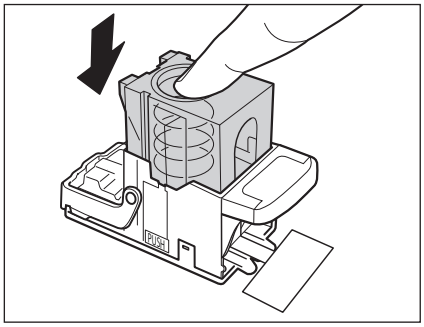

IMPORTANT

- Use only staple cartridges intended for use with this machine.
- Do not remove the seal that holds the staples together before you place the staple cartridge into the staple case.

NOTE

Only one staple cartridge can be inserted at a time.

6 Remove the seal holding the staples together, by pulling it straight out, and then down.

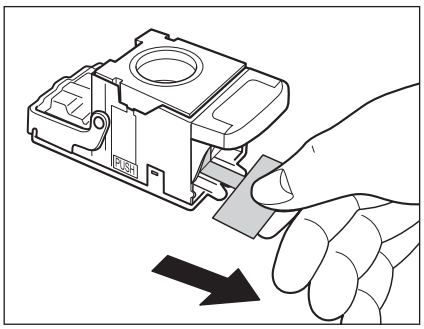

IMPORTANT

Make sure that you pull the seal straight out, and then down. If you pull it out at an angle, it may tear.

7 Gently push the staple case into the stapler unit, until it is securely in place.

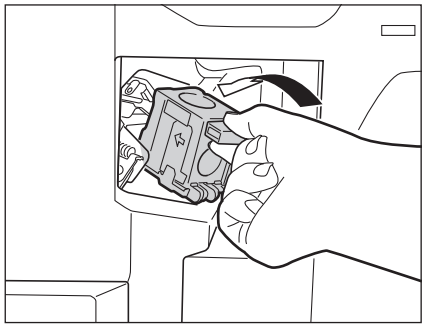

8 Close the front cover of the finisher.

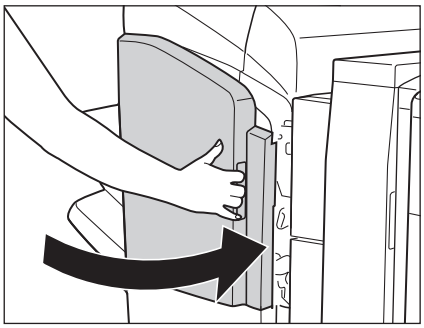

Staple Finisher-B1

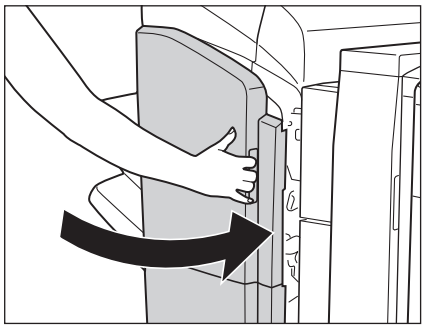

Booklet Finisher-B1

CAUTION

When closing the front cover of the finisher, be careful not to get your fingers caught, as this may result in personal injury.

NOTE

If there are no staples ready for stapling after the cover is closed, the stapler unit automatically performs a "dry" stapling operation to reposition the staples.

Replacing the Staple Cartridge in the Saddle Stitcher Unit

When the saddle stitcher unit of the Booklet Finisher-B1 is almost out of staples and the staple cartridge in the saddle stitcher unit must be replaced, a screen prompting you to replace the staple cartridge appears on the touch panel display. Follow the procedure described below to replace the staple cartridge.

Use only staple cartridges intended for use with this machine. See e-Manual > Optional Products (imageRUNNER ADVANCE C7065/C7055).

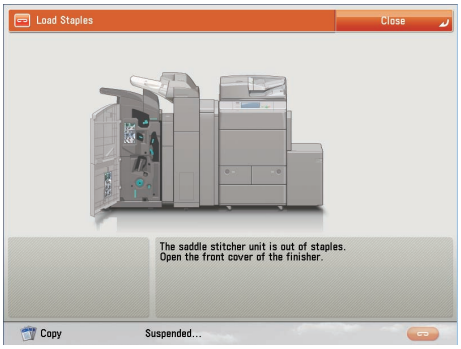

IMPORTANT

If necessary, remove all of the output paper in the Booklet Tray before replacing the staple cartridge in the saddle stitcher unit.

NOTE

- This procedure is necessary only if the Booklet Finisher is attached.
- We recommend that you order staple cartridges from your local authorized Canon dealer before your stock runs out.
- Remove the black part on the end before inserting the staple cartridge.

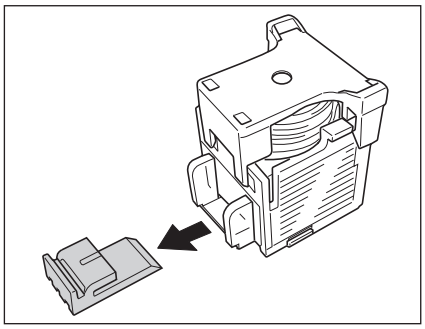

1 Open the front cover of the finisher.

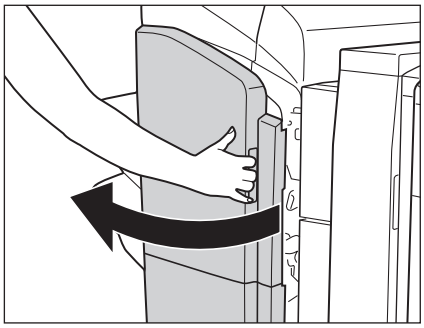

2 Grip the saddle stitcher unit by its handle, and pull it out of the finisher until it stops.

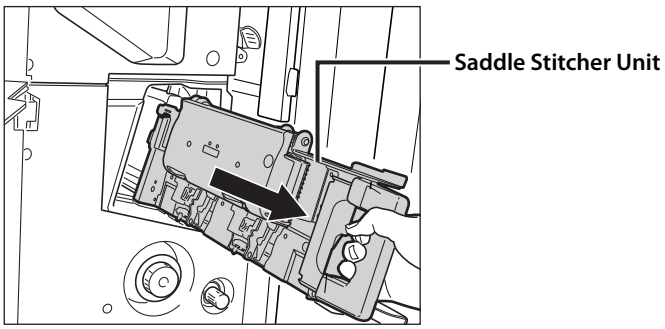

3 Pull the stapler unit of the saddle stitcher unit towards you, and then push it up.

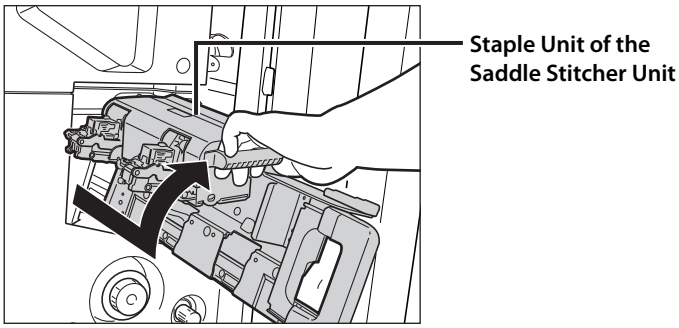

4 Pull out the empty staple cartridge, holding it by its left and right sides.

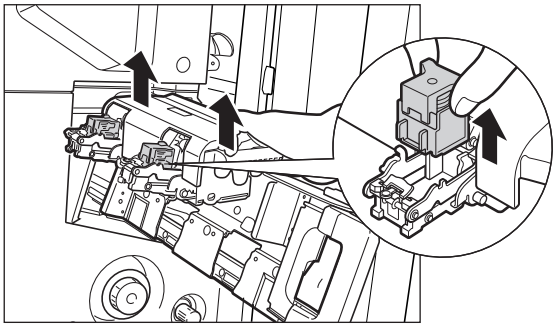

5 Insert the new staple cartridge.

Push the staple cartridge in until it clicks into place.

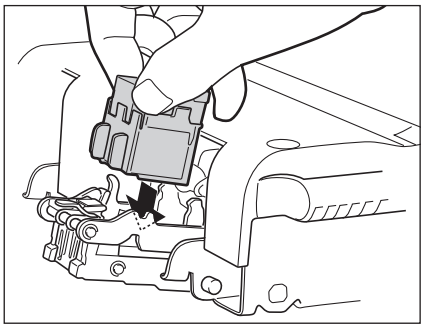

NOTE

- When replacing the staple cartridges, replace both the front and back staple cartridges.
- Only one front and rear staple cartridge can be inserted at a time.

6 **Pull the stapler unit of the saddle stitcher unit towards you, and then push it down into its original position.**

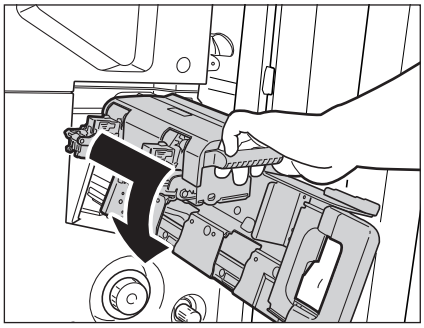

7 **Gently push the saddle stitcher unit back into its original position.**

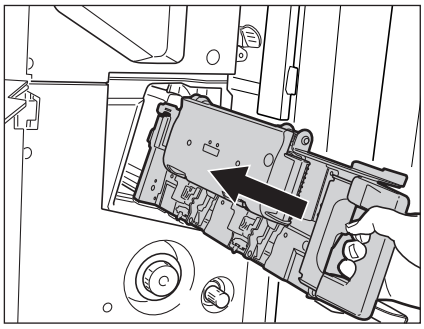

8 **Close the front cover of the finisher.**

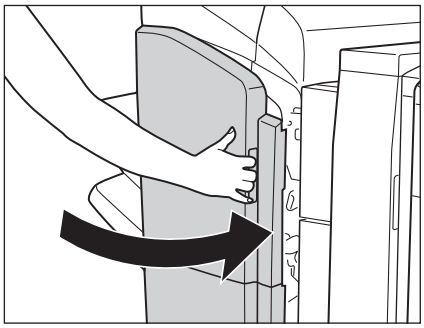

CAUTION

When closing the front cover of the finisher, be careful not to get your fingers caught, as this may result in personal injury.

IMPORTANT

When you have replaced the staple cartridge, be sure to manually reposition the staples in the saddle stitcher unit. (See e-Manual > Settings/Registration.)

Removing Punch Waste

When the punch waste tray of the puncher becomes full, a screen prompting you to remove the punch waste appears on the touch panel display. Follow the procedure described below to remove the punch waste.

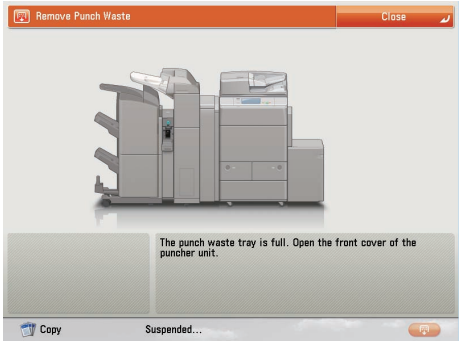

NOTE

This procedure is necessary only if the puncher is attached.

1 **Open the front cover of the punch waste tray.**

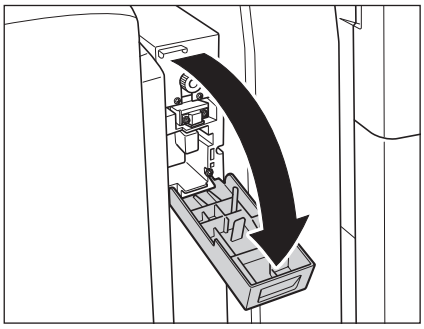

2 **Pull out the punch waste tray.**

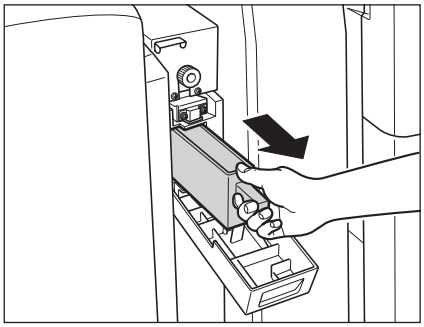

3 Discard the punch waste.

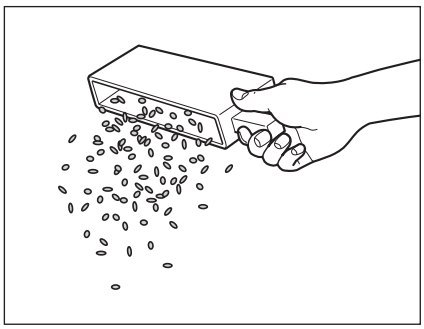

NOTE

Make sure that the punch waste tray is completely emptied.

4 Return the punch waste tray to its original position.

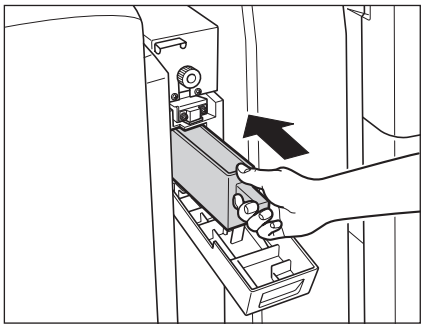

NOTE

If the punch waste tray is not securely in place, you cannot make prints in the Hole Punch mode.

5 Close the front cover of the punch waste tray.

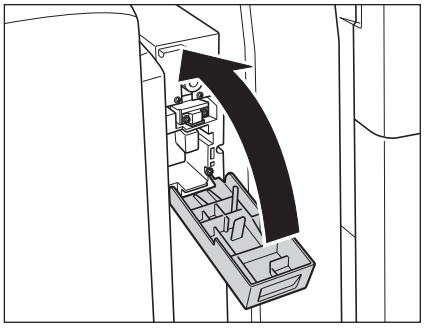

CAUTION

When closing the front cover of the punch waste tray, be careful not to get your fingers caught, as this may result in personal injury.

Replacing the Toner Cartridge

When there is only a small amount of toner remaining inside the machine, the message <Black toner is low. Replacement not yet needed.> appears on the touch panel display. You can continue printing, but at this time you should purchase a new toner cartridge of the indicated color, to have it available when needed.

When the message <Replace toner cartridge. (black)> is displayed on the touch panel display, press [ ] on the bottom right and replace the toner cartridge for the displayed color.

When the Black toner or all of the toners run out completely and prints can no longer be made, a screen with instructions on how to replace the toner cartridge appears on the touch panel display. Follow the procedure described below to replace the toner cartridge.

If you press [Close], you can continue operations, such as setting modes and scanning originals, even if you do not replace the toner cartridge immediately.

WARNING

Do not burn or throw used toner cartridges into open flames, as this may cause the toner remaining inside the cartridges to ignite, resulting in burns or a fire.

CAUTION

- **Keep toner out of the reach of small children. If toner is ingested, consult a physician immediately.**
- **Take care not to allow toner to come into contact with your hands or clothing. If toner gets onto your hands or clothing, wash it off immediately with cold water. Washing it off with warm water will set the toner, and make it impossible to remove the toner stains.**

IMPORTANT

- Use only toner cartridges intended for use with this machine.
- Do not replace toner cartridges until the message prompting you to do so appears.
- You can replace a toner cartridge while the machine is printing.
- The color of the toner to be replaced is displayed on the touch panel display. If multiple toner cartridges must be replaced, replace the toner cartridges in the following order: Black, Yellow, Magenta, Cyan.
- If you continue copying or printing in black-and-white after cyan, magenta, or yellow toner runs out, do not remove the depleted toner cartridges from the machine.
- You can display an error message informing the user that the remaining toner is low. For instructions on displaying the remaining toner error message, see e-Manual > Settings/Registration. For instructions on deleting the remaining toner error message, see e-Manual > Settings/Registration.

NOTE

- When the message appears, approximately 10% of the toner is left. It is recommended that you get a new toner cartridge ready for replacement before the displayed toner color runs out.
- Complete instructions on how to replace the toner cartridge can be accessed by pressing [Previous] or [Next] on the touch panel display.
- If toner runs out during a print job, the remaining prints are made after you replace the toner cartridge.
- If black toner is left, you can continue copying and printing in black-and-white. However, if a job is interrupted because cyan, magenta, or yellow toner runs out, copying and printing in black-and-white is only possible for functions other than the function being used for the interrupted job.
- After replacing toner cartridges, if printed colors are different from the colors printed before you replaced the toner cartridges, perform an [Auto Adjust Gradation] in [Adjustment/Maintenance] (Settings/Registration). (see e-Manual > Settings/Registration.)

1 **Press [ ].**

NOTE

If the Black toner or all of the toners run out, this step is not necessary.

2 Open the toner replacement cover, holding both sides.

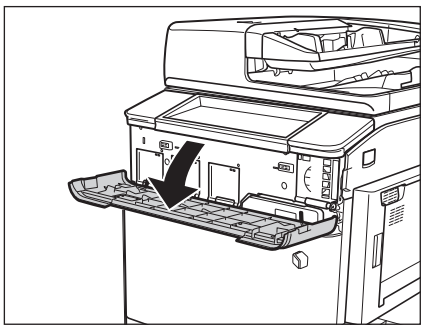

3 Select the color of the toner you want to replace from the display on the control panel → press [Remove Toner Cartridges].

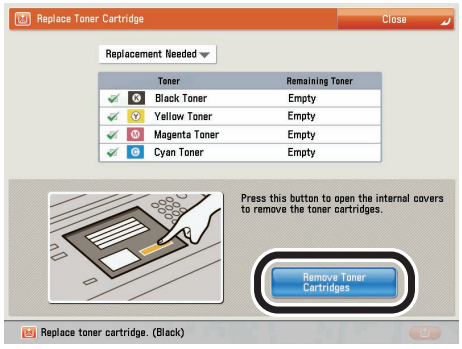

If the toner with content remaining is selected, the message <The selected toner can still be used. Do you want to replace it?> is displayed. If you want to continue replacement, press [Yes]. If you do not want to replace the toner, press [No].

4 Wait for the internal cover to open automatically, and pull the toner cartridge out of the toner supply port.

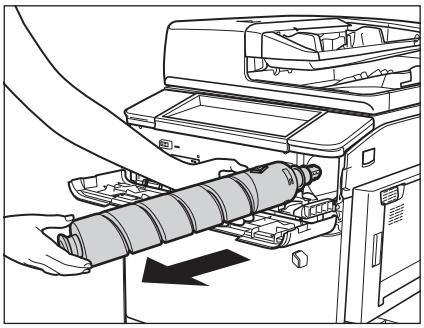

Black Toner Cartridge

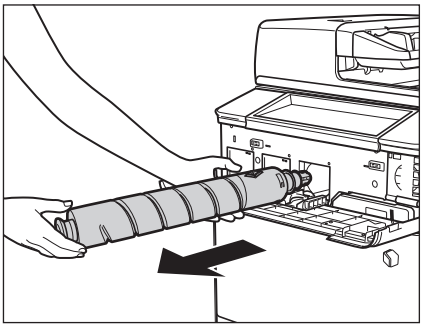

Cyan, Magenta, or Yellow Toner Cartridge

If the internal cover does not automatically open because of reasons such as closing of the toner replacement cover, an error message is displayed. Repeat the procedure from step 1.

WARNING

Do not burn or throw used toner cartridges into open flames, as this may cause the toner remaining inside the cartridges to ignite resulting in burns or a fire.

CAUTION

Do not open the internal cover by force, as doing so may damage the machine.

5 Hold the new toner cartridge in your hands, as shown below, and gently tilt it up and down 10 times.

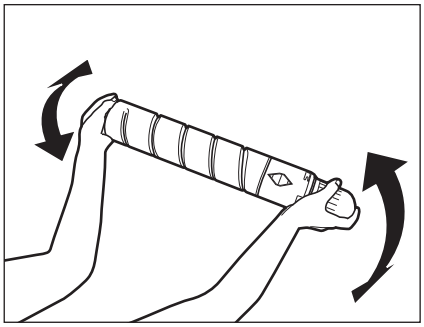

CAUTION

Never touch the tip of the toner cartridge or subject it to shock by hitting it.

6 Twist the protective cap of the new toner cartridge in the direction of the arrow to remove it.

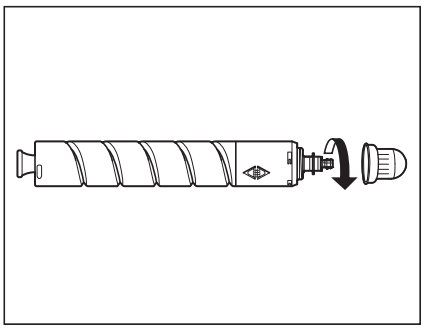

CAUTION

Never not touch the tip of the toner cartridge or subject it to shock by hitting it. Doing so may cause the toner cartridge to leak.

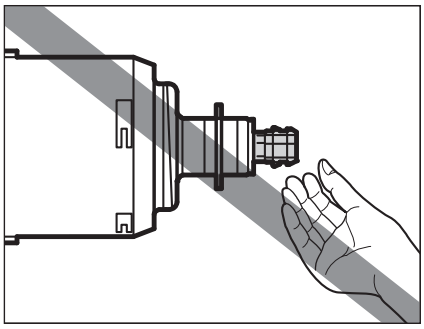

7 Push the new toner cartridge in as far as possible.

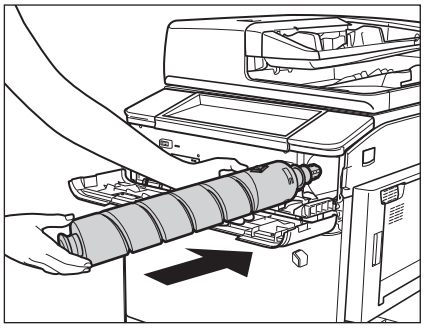

Black Toner Cartridge

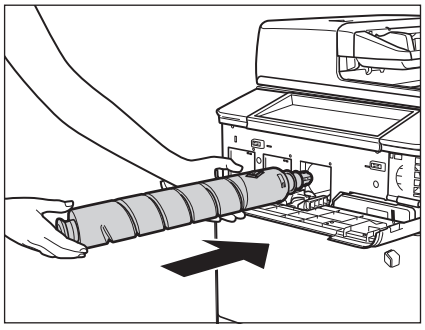

Cyan, Magenta, or Yellow Toner Cartridge

IMPORTANT

When replacing toner cartridges, make sure that the color of the toner cartridge matches the color of label on the internal cover.

8 Close the internal cover.

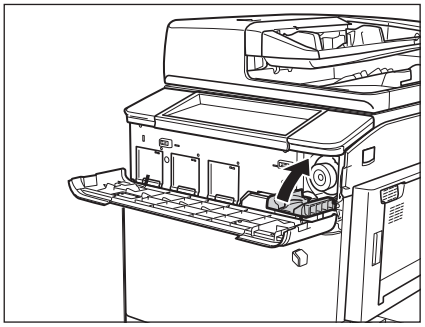

Black Toner Cartridge

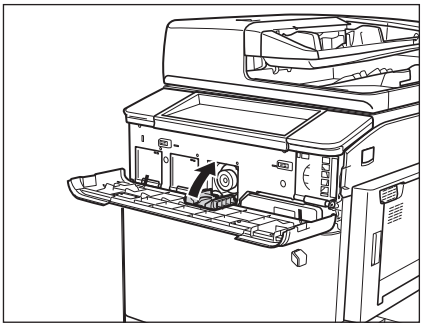

Cyan, Magenta, or Yellow Toner Cartridge

If the toner cartridge is not inserted, you cannot close the internal cover.

CAUTION

When closing the internal cover, be careful not to get your fingers caught, as this may result in personal injury.

9 Close the toner replacement cover.

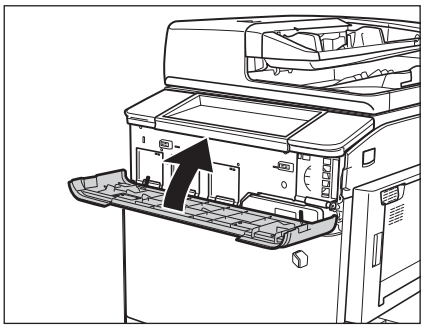

The toner confirmation screen is displayed.

CAUTION

When closing the toner replacement cover, be careful not to get your fingers caught, as this may result in personal injury.

Routine Cleaning

If the original is not copied clearly, clean the following parts of the machine. For high-quality printouts, we recommend cleaning these parts once or twice a month.

- Platen glass
- Feeder and the underside of the feeder
- Rollers
- Wires
- Drums
- Control Panel

WARNING

- **When cleaning the machine, first turn OFF the main power switch, and disconnect the power cord. Failure to observe these steps may result in a fire or electrical shock.**
- **Do not use alcohol, benzene, paint thinner, or other solvents for cleaning. Doing so may result in damage to the plastic parts.**
- **Disconnect the power cord from the power outlet regularly, and clean the area around the base of the power plug's metal pins and the power outlet with a dry cloth to ensure that all dust and grime is removed. If the power cord is connected for a long period of time in a damp, dusty, or smoky location, dust can build up around the power plug and become damp. This may cause a short circuit and result in a fire.**

Platen Glass and Underside of the Feeder

Clean the platen glass and the underside of platen cover by following the procedure below.

IMPORTANT

If the platen glass or the underside of the platen cover is dirty, the original may not be scanned clearly, or the size of the original may be detected incorrectly.

NOTE

This procedure is necessary only if the Duplex Color Image Reader Unit-A1 is attached.

1 **Clean the platen glass and the underside of the platen cover with a cloth dampened with water, and then wipe them clean with a soft, dry cloth.**

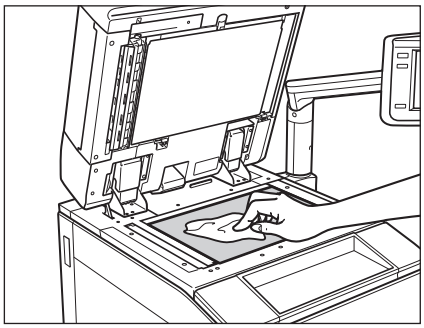

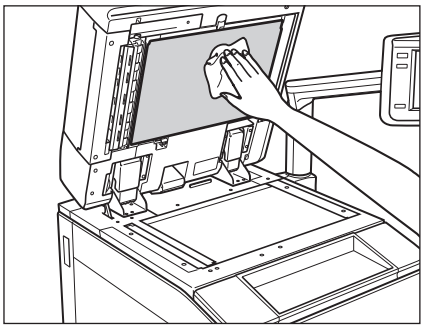

CAUTION

Do not dampen the cloth too much, as this may damage the original or break the machine.

Duplex Color Image Reader Unit-A1

If originals that have been fed through the feeder have streaks or appear dirty, clean the feeder's scanning area.

CAUTION

Do not dampen the cloth too much, as this may damage the original or break the machine.

IMPORTANT

If the document feed scanning area is dirty, documents may not be scanned clearly, and the size of the document may not be detected correctly.

NOTE

This procedure is necessary only if the Duplex Color Image Reader Unit-A1 is attached.

1 **Open the feeder.**

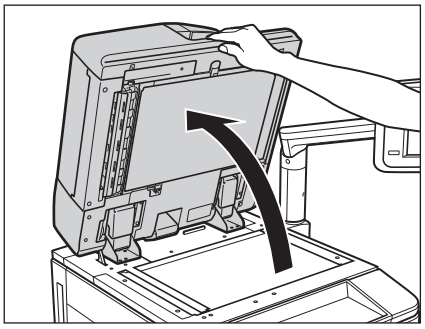

2 **Clean the original scanning area (thin glass strip) with a cloth dampened in water or a mild detergent, and then wipe the area with a soft dry cloth.**

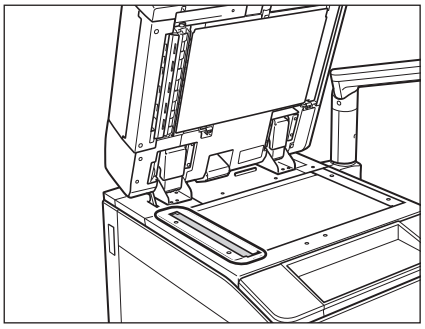

3 **Pull the lever above the feeder, and open the document scan cover.**

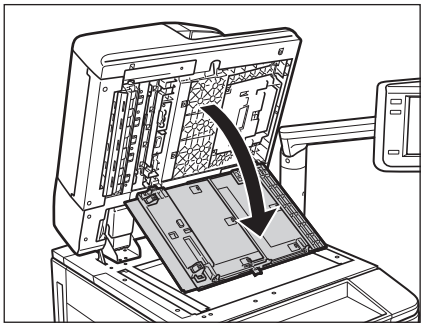

CAUTION

Open the document scan cover carefully, as not to scratch the platen glass.

4 **Open the inside cover.**

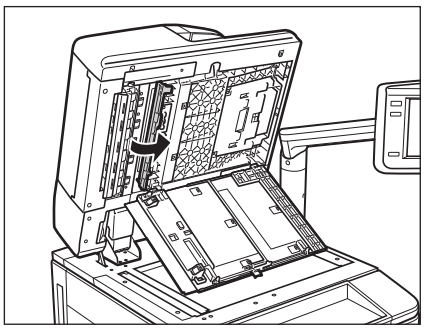

5 **Clean the feed scanning area with a cloth dampened in water or a mild detergent, and then wipe the area with a soft dry cloth.**

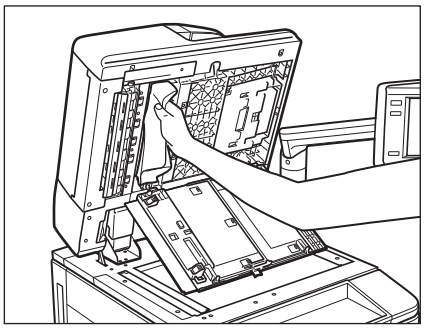

6 **Close the inside cover.**

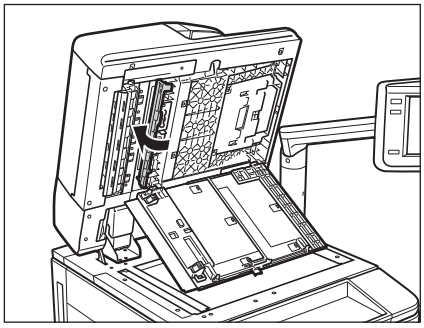

CAUTION

When closing the inside cover, be careful not to get your fingers caught, as this may result in personal injury.

7 **Close the document scan cover.**

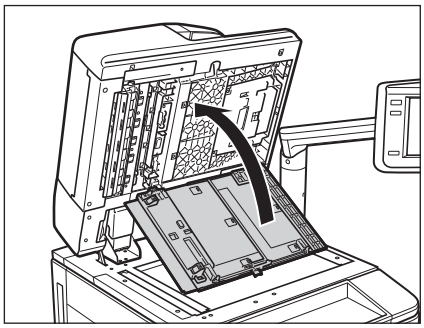

CAUTION

When closing the document scan cover, be careful not to get your fingers caught, as this may result in personal injury.

8 **Close the feeder.**

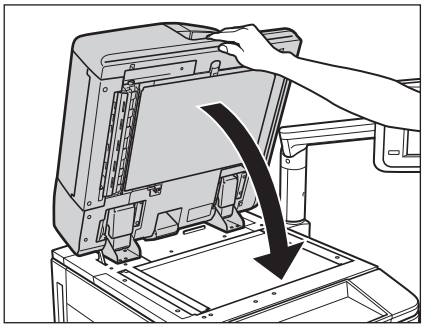

CAUTION

- **When closing the feeder, be careful not to get your fingers caught, as this may result in personal injury.**
- **Be aware that the light emitted from the platen glass may be very bright when closing the feeder.**
- **Do not dampen the cloth too much, as this may damage the original or break the machine.**

Color Image Reader Unit-A1

NOTE

- Spin the rollers while cleaning them.
- This procedure is necessary only if the Color Image Reader Unit-A1 is attached.

1 **Open the feeder cover.**

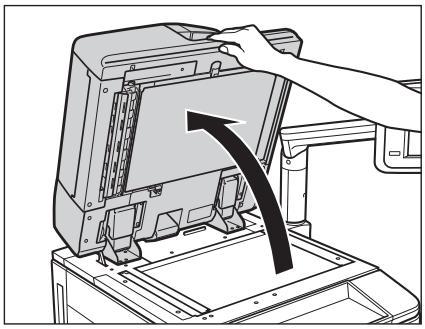

2 **Clean the original scanning area (thin glass strip) with a cloth dampened in water or a mild detergent, and then wipe the area with a soft dry cloth.**

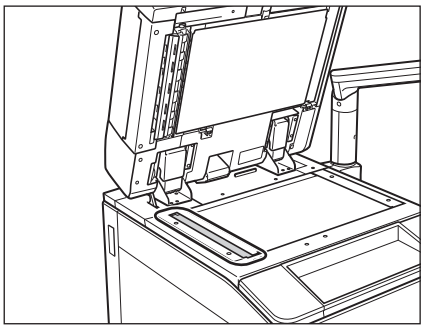

3 **Close the feeder cover.**

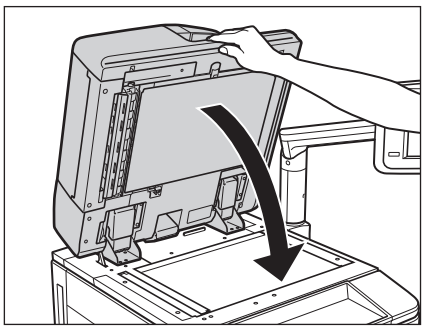

NOTE

- When closing the feeder, be careful not to get your fingers caught, as this may result in personal injury.
- Be aware that the light emitted from the platen glass may be very bright when closing the feeder.
- Do not dampen the cloth too much, as this may damage the original or break the machine.

Automatic Feeder Cleaning

If your originals have black streaks or appear dirty after scanning them through the feeder, clean the rollers of the feeder.

NOTE

This procedure is necessary only if the Feeder is attached.

NOTE

- It takes approximately 20 seconds to clean the feeder.
- Feeder Cleaning cannot be performed during printing.

1 **Press (Settings/Registration) → [Adjustment/Maintenance] → [Maintenance] → [Clean Feeder].**

2 **Place 10 sheets of blank paper into the feeder → press [Start].**

Make sure that you fan the sheets of paper well.

Use normal A4 paper.

When cleaning is complete, try scanning again.

NOTE

To cancel feeder cleaning while it is in progress, press [Cancel].

Wire Cleaning

If streaks appear on printed output or random parts of the printed image are missing, clean the corona assembly wires inside the main unit.

NOTE

- It takes approximately 35 seconds to clean the wire.
- Wire cleaning cannot be performed during printing.

1 **Press (Settings/Registration) → [Adjustment/Maintenance] → [Maintenance] → [Clean Wire].**

2 **Press [Start].**

When cleaning is complete, try printing again.

Roller Cleaning

If dirt or streaks appear on printed output, clean the roller inside of the main unit.

NOTE
- It takes approximately 20 seconds to clean the roller.
- Roller cleaning cannot be performed during printing.

1 **Press (Settings/Registration) → [Adjustment/Maintenance] → [Maintenance] → [Clean Roller].**

2 **Press [Start].**

When cleaning is complete, try printing again.

Drum Cleaning

Printed images may be light or distorted when the machine is used immediately after installation or after a long period time of not using the machine. If printed images are light or distorted, clean the drum inside the machine as necessary.

NOTE
- It takes approximately 35 seconds to clean the drum.
- Drum cleaning cannot be performed drum printing.

1 **Press (Settings/Registration) → [Adjustment/Maintenance] → [Maintenance] → [Clean Drum].**

2 **Press [Start].**

When cleaning is complete, try printing again.

Cleaning the Touch Panel Display

Follow the procedure below to clean the touch panel display.

1 **Clean the touch panel display with a cloth dampened with water, and then wipe it clean with a soft, dry cloth.**

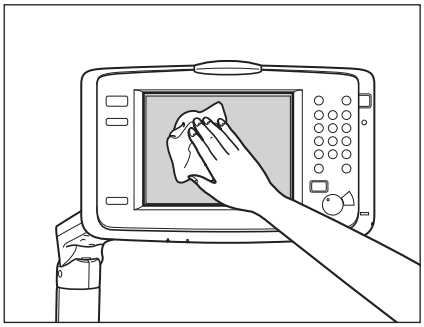

CAUTION

Since the touch panel display becomes dirty as you use it, it is recommended that you clean it once every week or 10 days.

Consumables

The following consumables are available from Canon. For more information, contact your local authorized Canon dealer.

We recommend that you order paper stock and toner from your local authorized Canon dealer before your stock runs out.

Paper Stock

In addition to plain paper (A3, B4, A4, B5, and A5), recycled paper, color paper, transparencies (recommended for this machine), tracing paper, labels, and other types of paper stock are available. For more information, contact your local authorized Canon dealer.

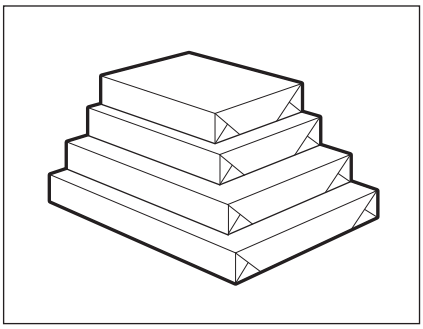

CAUTION

Do not store paper in places exposed to open flames, as this may cause the paper to ignite, resulting in burns or a fire.

IMPORTANT

To prevent moisture build-up, tightly wrap any remaining paper in its original package for storage.

NOTE

- For high-quality printouts, use paper recommended by Canon.
- Some commercially available paper types are not suited for this machine. Contact your local authorized Canon dealer when you need to purchase paper.

Toner

If a message prompting you to replace the toner cartridge appears on the touch panel display, replace the used toner cartridge with a new one.

Toner comes in four colors: black, cyan, magenta, and yellow.

Check the toner color that you need to replace before ordering toner from your local authorized Canon dealer. Also, when replacing the toner cartridge, make sure that you replace toner of the correct color.

Use only toner cartridges intended for use with this machine.

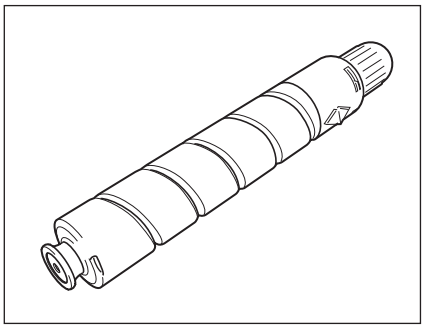

Black Toner Cartridge

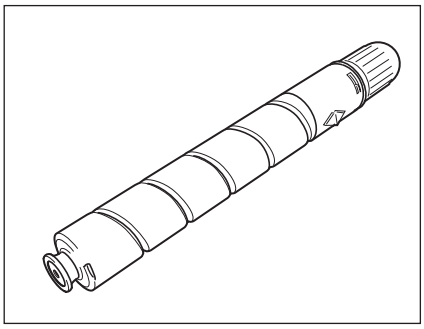

Cyan, Magenta, or Yellow Toner Cartridge

WARNING

- **Do not burn or throw used toner cartridges into open flames, as this may cause the toner remaining inside the cartridges to ignite, resulting in burns or a fire.**
- **Do not store toner cartridges in places exposed to open flames, as this may cause the toner to ignite, resulting in burns or a fire.**

CAUTION

Keep toner and other consumables out of the reach of small children. If these items are ingested, consult a physician immediately.

IMPORTANT

- Store toner cartridges in a cool location, away from direct sunlight. (The recommended storage conditions are: temperatures below 30 °C, and humidity below 80%.)
- [Be careful of counterfeit toner cartridges]
  Please be aware that there are counterfeit Canon toner cartridges in the marketplace. Use of counterfeit toner cartridge may result in poor print quality or machine performance. Canon is not responsible for any malfunction, accident or damage caused by the use of counterfeit toner cartridge.
  For more information, see http://www.canon.com/counterfeit.

Stamp Cartridge

The stamp cartridge is used to stamp originals. Use the tweezers provided to remove and replace the stamp cartridge.

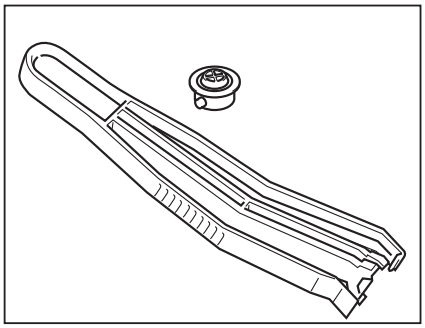

Genuine Supplies

Canon has developed and manufactured Toner, Parts, and Supplies specifically for use in this machine. For optimal print quality and for optimal machine performance and productivity, we recommend that you use Genuine Canon Toner, Parts, and Supplies. Contact your Canon Authorized Dealer or Service Provider for Genuine Canon Supplies.

Troubleshooting

2

CHAPTER

This chapter explains what to do in response to a paper jam in the main unit, or optional units, and an error message display.

Reducing the Frequency of Paper Jams 2-2

Labels for Clearing Paper Jams. 2-3
- (D) Multi-drawer Paper Deck-A1 (Optional) 2-3
- (F) Staple Finisher-A1/Booklet Finisher-A1 (Optional) 2-4
- (M) Paper Folding Unit-G1 (Optional) 2-6
- (I) Document Insertion Unit-H1 (Optional) 2-7
- (R) Professional Puncher Integration Unit-B1 (Optional) 2-8

Clearing Paper Jams. 2-9
- Screens Indicating the Locations of Paper Jams 2-9
- Main Unit (Fixing Transport Unit) 2-12
- Multi-purpose Tray 2-15
- Right Cover of the Machine (When the Multi-drawer Paper Deck-A1 is attached) 2-17
- Right Cover of the Machine. 2-19
- Left Cover. 2-21
- Left Part of the Machine (When the Buffer Pass Unit-F1 is Attached). 2-22
- Paper Drawers 3 and 4 2-25
- Paper Drawer (Right) 2-26
- Paper Drawer (Left). 2-28
- Buffer Pass Unit-F1 2-29
- Duplex Color Image Reader Unit-A1/Color Image Reader Unit-A1 (Optional) 2-32
- Paper Deck Unit-A1/POD Deck Lite-A1 (Optional) 2-35
- Front Cover of the Multi-drawer Paper Deck-A1 (Optional). 2-37
- Paper Decks of the Multi-drawer Paper Deck-A1(Optional). 2-42
- Document Insertion Unit-H1 (Optional) 2-43
- Insertion Unit of the Document Insertion/Folding Unit-G1/Document Insertion Unit-J1 (Optional) 2-49
- Inside the Insertion Unit of the Document Insertion/Folding Unit-G1/Document Insertion Unit-J1 (Optional). 2-52
- Document Insertion/Folding Unit-G1 (Optional). 2-56
- Paper Folding Unit-G1 (Optional) 2-61
- Inside of the Staple Finisher-A1/Booklet Finisher-A1 (Optional) 2-66
- Saddle Stitcher Unit of the Booklet Finisher-A1 (Optional) 2-72
- Inside the Top Cover of the Staple Finisher-B1/Booklet Finisher-B1 (Optional) 2-78
- Output Area of the Staple Finisher-B1/Booklet Finisher-B1 (Optional) 2-80
- Front Cover of the Booklet Finisher-B1 (Optional) 2-83
- Saddle Stitcher Unit of the Booklet Finisher-B1 (Optional) 2-86
- Professional Puncher Integration Unit-B1 (Optional). 2-88
- Puncher (Optional) 2-92

Clearing Staple Jams 2-95
- Staple Finisher-A1/Booklet Finisher-A1 (Optional) 2-95
- Saddle Stitcher Unit of the Booklet Finisher-A1 (Optional) 2-97
- Staple Finisher-B1/Booklet Finisher-B1 (Optional) 2-100
- Saddle Stitcher Unit of the Booklet Finisher-B1 (Optional) 2-102

List of Error Messages 2-106
- Self-Diagnostic Display 2-106
- List of Error Codes without Messages 2-109

If Memory Becomes Full during Scanning 2-115
- For the Copy function 2-115
- For the Fax/Scan and Send function 2-115
- For the Scan and Store function 2-116

Service Call Message 2-117
- Contacting Your Local Authorized Canon Dealer 2-117
- Setting the Limited Functions Mode from the Service Call Message Screen. 2-118
- Functions Available When the Printer/Scanner Cannot Be Used Due to an Error 2-119

When the Power Does Not Turn ON. 2-120

Printer/Fax Driver Troubleshooting 2-121

Reducing the Frequency of Paper Jams

If paper jams occur frequently, even though there is no apparent problem with the machine, either one of the following two reasons may be the cause. Follow the instructions described below to reduce the frequency of paper jams.

■ There are torn pieces of paper left inside the machine.

Pulling jammed paper out of the machine by force may leave parts of the paper torn inside, leading to frequent paper jams. If paper tears while you are trying to remove jammed paper from the machine, make sure that you remove all of the torn pieces.

■ The paper loaded in the paper drawer differs from the setting.

Make sure that the paper loaded in the paper drawer matches the paper size/type registered in Settings/Registration.

Labels for Clearing Paper Jams

Labels for clearing paper jams are attached inside the machine. The label corresponds to the screen that appears when a paper jam occurs. Follow the table below to clear the paper jams.

IMPORTANT

Multi-drawer Paper Deck-A1, Staple Finisher-A1/Booklet Finisher-A1, Paper Folding Unit-G1, Document Insertion Unit-H1, Professional Puncher Integration Unit-B1 are optional.

(D) Multi-drawer Paper Deck-A1 (Optional)

If a paper jam occurs inside the Multi-drawer Paper Deck-A1, a label similar to the one shown below appears on the screen that displays the procedure to solve the problem. Follow [Operation Order] to clear the paper jam.

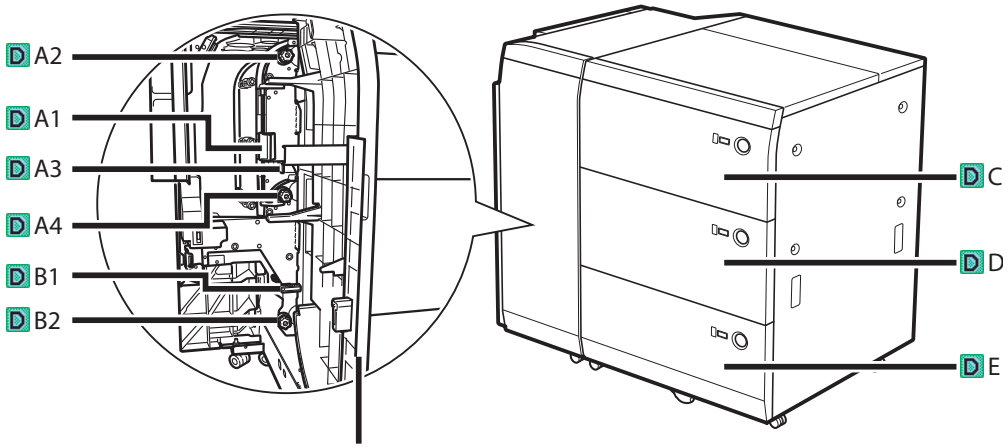

Front Cover

Multi-drawer Paper Deck-A1

Order*	Location(Label)
1	Front Cover
2	(D) A1
3	(D) A2
4	(D) A3
5	(D) A4
6	(D) B1
7	(D) B2
8	(D) C
9	(D) D

* The order may differ from what you actually see. In this case, follow the instructions on the touch panel display.

(F) Staple Finisher-A1/Booklet Finisher-A1 (Optional)

If a paper jam occurs inside the Staple Finisher-A1/Booklet Finisher-A1, a label similar to the one shown below appears on the screen that displays the procedure to solve the problem. Follow [Operation Order] to clear the paper jam.

■ Staple Finisher-A1

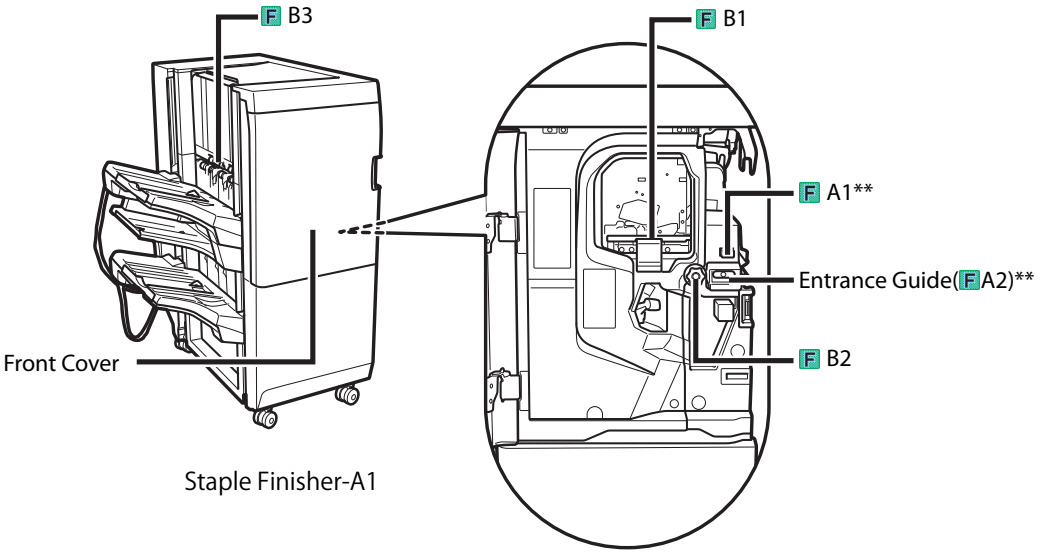

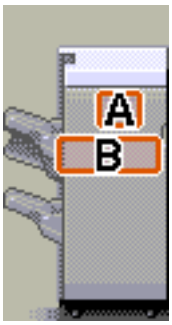

Order*	Location(Label)
1	Front Cover
2	(F) A1**
3	Entrance Guide ((F) A2)**
4	(F) B1
5	(F) B2
6	(F) B3

* The order may differ from what you actually see. In this case, follow the instructions on the touch panel display.

** When the Puncher Unit-BF1/BG1 is attached.

■ Booklet Finisher-A1

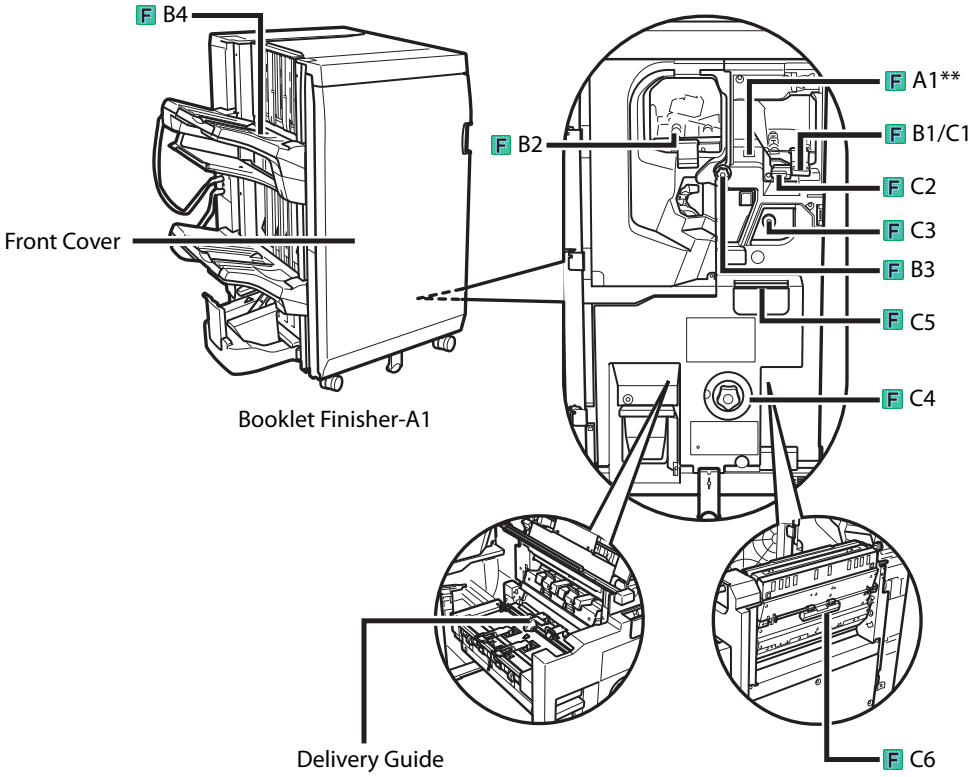

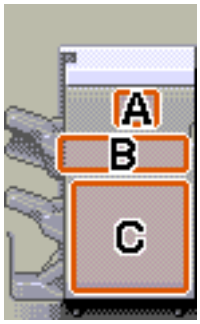

Order*	Location(Label)
1	Front Cover
2	(F) A1**
3	(F) B1
4	(F) B2
5	(F) B3
6	(F) B4
7	(F) C1
8	(F) C2
9	(F) C3
10	(F) C4
11	(F) C5
12	(F) C6

* The order may differ from what you actually see. In this case, follow the instructions on the touch paneldisplay.

** When the Puncher Unit-BF1/BG1 is attached.

(M) Paper Folding Unit-G1 (Optional)

If a paper jam occurs inside the Paper Folding Unit-G1, a label similar to the one shown below appears on the screen that displays the procedure to solve the problem. Follow [Operation Order] to clear the paper jam.

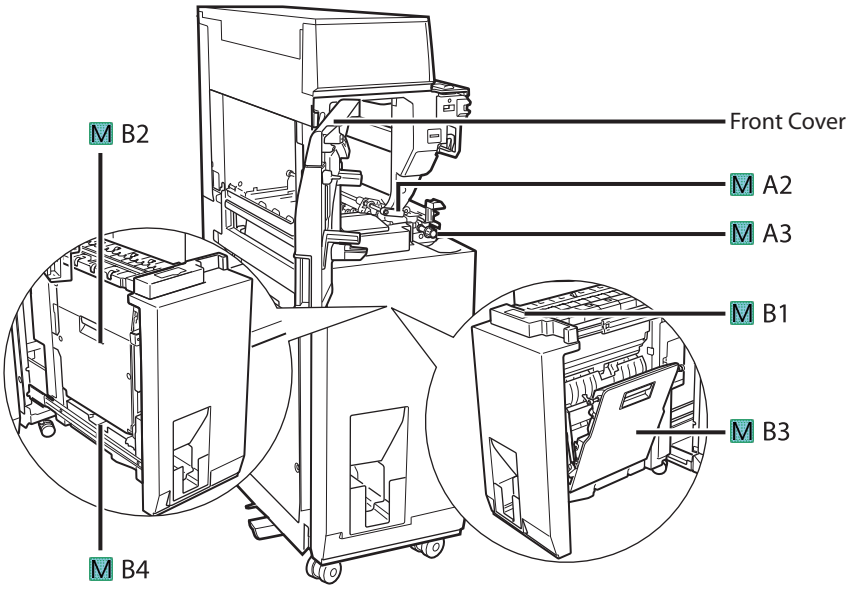

Paper Folding Unit-G1

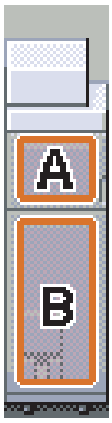

Order*	Location(Label)
1	Front Cover
2	(M) A2
3	(M) A3
4	(M) B1
5	(M) B2
6	(M) B3
7	(M) B4

* The order may differ from what you actually see. In this case, follow the instructions on the touch panel display.

(I) Document Insertion Unit-H1 (Optional)

If a paper jam occurs inside the Document Insertion Unit-H1, a label similar to the one shown below appears on the screen that displays the procedure to solve the problem. Follow [Operation Order] to clear the paper jam.

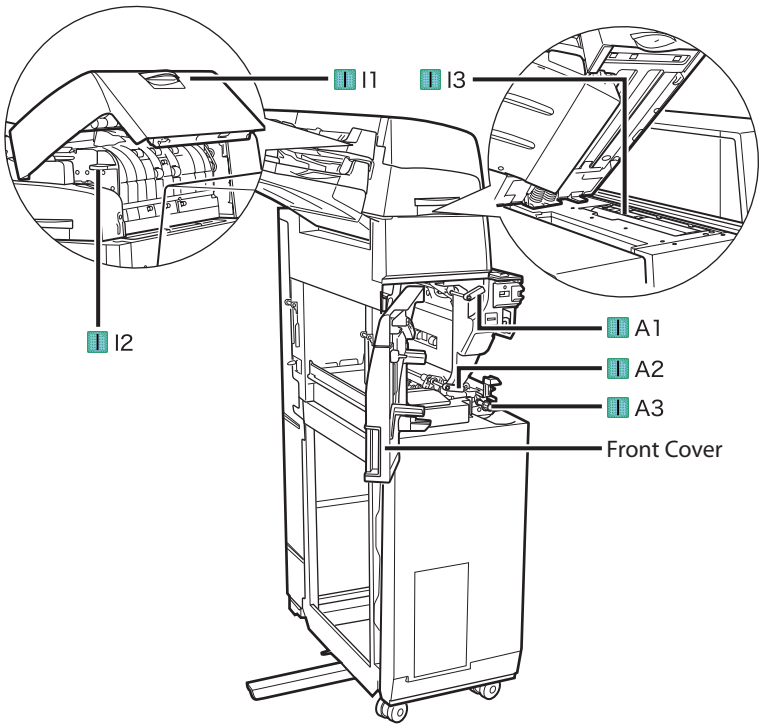

Document Insertion Unit-H1

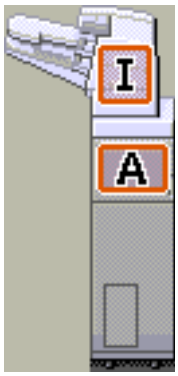

Order*	Location(Label)
1	(I) I1
2	(I) I2
3	(I) I3
4	Front Cover
5	(I) A1
6	(I) A2
7	(I) A3

* The order may differ from what you actually see. In this case, follow the instructions on the touch panel display.

(R) Professional Puncher Integration Unit-B1 (Optional)

If the paper jam occurs inside the optional Professional Puncher Integration Unit-B1, a location label similar to the one shown below appears on the screen that displays the procedure to solve the problem. Follow [Operation Order] to clear the paper jam.

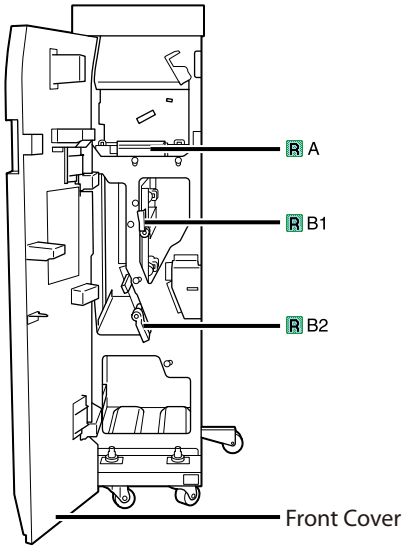

Professional Puncher Integration Unit-B1

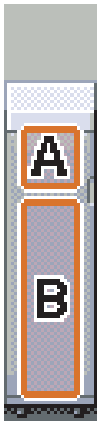

Order*	Location Label
1	Front Cover
2	(R) A
3	(R) B1
4	(R) B2

* The order may differ from what you actually see. In this case, follow the instructions on the touch panel display.

Clearing Paper Jams

If a paper jam occurs, a screen indicating the location of the paper jam appears on the touch panel display.

Screens Indicating the Locations of Paper Jams

The screen indicating the location of the paper jam and instructions on how to clear the paper jam appear on the touch panel display. This screen repeatedly appears on the touch panel display until the paper jam is entirely cleared.

■ Example of a Screen Indicating the Location of the Paper Jam

You can check the location of the paper jam on the touch panel display.

If you press [Close], you can continue operations, such as setting modes, even if the jammed paper is not removed immediately.

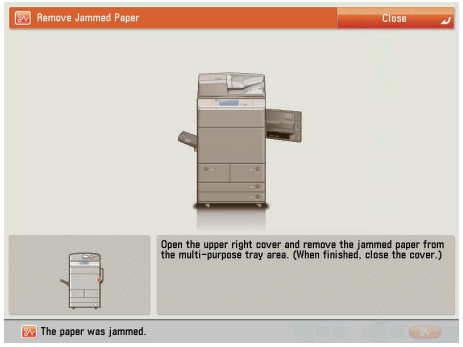

IMPORTANT

If a paper jam occurs in the Feeder, you cannot continue operating the machine. Follow the directions on the touch panel display to clear the paper jam. (See "Duplex Color Image Reader Unit-A1/Color Image Reader Unit-A1 (Optional)," on p. 2-32.)

■ Example of a Screen Indicating How to Clear the Paper Jam

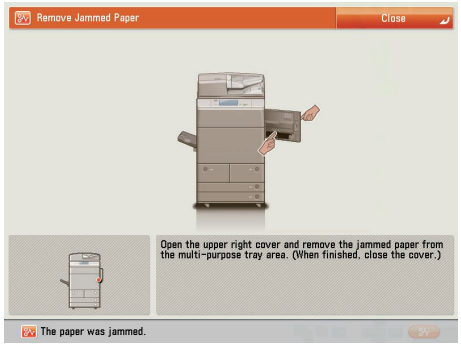

WARNING

There are some areas inside the machine which are subject to high-voltages. When removing jammed paper or when inspecting the inside of the machine, do not allow necklaces, bracelets, or other metal objects to touch the inside of the machine, as this may result in burns or electrical shock.

CAUTION

- **When removing jammed originals or paper, take care not to cut your hands on the edges of the originals or paper.**
- **When removing paper which has become jammed inside the machine, take care not to cut your hands or injure yourself on the inside of the machine. If you cannot remove the paper, contact your local authorized Canon dealer.**
- **When removing paper which has become jammed inside the machine, take care not to allow the toner on the jammed paper to come into contact with your hands or clothing, as this will dirty your hands or clothing. If they become dirty, wash them immediately with cold water. Washing them with warm water will set the toner, and make it impossible to remove the toner stains.**
- **When removing paper which has become jammed inside the machine, remove the jammed paper gently to prevent the toner on the paper from scattering and getting into your eyes or mouth. If the toner gets into your eyes or mouth, wash them immediately with cold water and immediately consult a physician.**
- **The fixing unit and its surroundings inside the machine may become hot during use. When removing jammed paper or when inspecting the inside of the machine, do not touch the fixing unit and its surroundings, as doing so may result in burns or electrical shock.**
- **When removing jammed paper or when inspecting the inside of the machine, do not be exposed to the heat emitted from the fixing unit and its surroundings for prolonged time, as doing so may result in low temperature burns, even though you did not touch them directly.**
- **If a paper jam occurs, follow the directions on the touch panel display to remove any jammed paper from inside the machine. Do not insert your fingers into the part not indicated on the touch panel display, as doing so may result in personal injury or burns.**
- **After clearing all paper jams, remove your hands from the machine immediately. Even if the machine is not in operation, your hands, hair, or clothing may get caught in the feed rollers, which could result in personal injury or damage if the machine suddenly starts printing.**

NOTE

If paper is jammed in several locations, remove the jammed paper in the order indicated on the touch panel display.

1 Inspect all paper jam locations indicated on the touch panel display, and remove any jammed paper.

See the appropriate pages below for instructions on finding and removing jammed paper. Or, you can follow the instructions on the touch panel display.

- Main Unit (Fixing Transport Unit) (See "Main Unit (Fixing Transport Unit)," on p. 2-12.)
- Multi-purpose Tray (See "Multi-purpose Tray," on p. 2-15.)
- Right Cover of the Machine (When the Multi-drawer Paper Deck-A1 is attached (See "Right Cover of the Machine (When the Multi-drawer Paper Deck-A1 is attached)," on p. 2-17.)
- Right Cover of the Machine (See "Right Cover of the Machine," on p. 2-19.)
- Left Cover (See "Left Cover," on p. 2-21.)
- Left Part of the Machine (When the Buffer Pass Unit-F1 Is Attached) (See "Left Part of the Machine (When the Buffer Pass Unit-F1 is Attached)," on p. 2-22.)
- Paper Drawer 3 and 4 (See "Paper Drawers 3 and 4," on p. 2-25.)
- Paper Drawer (Right) (See "Paper Drawer (Right)," on p. 2-26.)
- Paper Drawer (Left) (See "Paper Drawer (Left)," on p. 2-28.)
- Buffer Pass Unit-F1 (See "Buffer Pass Unit-F1," on p. 2-29.)

If jammed paper tears while it is being removed, be sure to remove any remaining pieces from inside the machine.

IMPORTANT

If the machine's power is turned OFF when there is a paper jam, detection of paper jams in the paper drawers is not possible after the power is turned back ON. Clear paper jams without turning the power OFF.

NOTE

Some areas that are shown to have paper jams may not actually have paper jams. However, always check all locations indicated on the touch panel display in the order that is given.

2 If a paper jam occurs inside an optional unit, see the instructions on the following pages.

- Duplex Color Image Reader Unit-A1/Color Image Reader Unit-A1 (See "Duplex Color Image Reader Unit-A1/Color Image Reader Unit-A1 (Optional)," on p. 2-32.)
- Paper Deck Unit-A1/POD Deck Lite-A1 (Optional) (See "Paper Deck Unit-A1/POD Deck Lite-A1 (Optional)," on p. 2-35.)
- Front Cover of the Multi-Drawer Paper Deck-A1 (Optional) (See "Front Cover of the Multi-drawer Paper Deck-A1 (Optional)," on p. 2-37.)
- Paper Decks of the Multi-Drawer Paper Deck-A1 (Optional) (See "Paper Decks of the Multi-drawer Paper Deck-A1(Optional)," on p. 2-42.)
- Document Insertion Unit-H1 (Optional) (See "Document Insertion Unit-H1 (Optional)," on p. 2-43.)
- Insertion Unit of the Document Insertion/Folding Unit-G1 (Optional) (See "Insertion Unit of the Document Insertion/Folding Unit-G1/Document Insertion Unit-J1 (Optional)," on p. 2-49.)
- Inside the Insertion Unit of the Document Insertion/Folding Unit-G1 (Optional) (See "Inside the Insertion Unit of the Document Insertion/Folding Unit-G1/Document Insertion Unit-J1 (Optional)," on p. 2-52.)
- Document Insertion/Folding Unit-G1 (Optional) (See "Document Insertion/Folding Unit-G1 (Optional)," on p. 2-56.)
- Paper Folding Unit-G1 (Optional) (See "Paper Folding Unit-G1 (Optional)," on p. 2-61.)
- Inside of the Staple Finisher-A1/Booklet Finisher-A1 (Optional) (See "Inside of the Staple Finisher-A1/Booklet Finisher-A1 (Optional)," on p. 2-66.)
- Saddle Stitcher Unit of the Booklet Finisher-A1 (Optional) (See "Saddle Stitcher Unit of the Booklet Finisher-A1 (Optional)," on p. 2-72.)
- Inside the Top Cover of the Staple Finisher-B1/Booklet Finisher-B1 (Optional) (See "Inside the Top Cover of the Staple Finisher-B1/Booklet Finisher-B1 (Optional)," on p. 2-78.)
- Output Area of the Staple Finisher-B1/Booklet Finisher-B1 (Optional) (See "Output Area of the Staple Finisher-B1/Booklet Finisher-B1 (Optional)," on p. 2-80.)
- Front Cover of the Booklet Finisher-B1 (Optional) (See "Front Cover of the Booklet Finisher-B1 (Optional)," on p. 2-83.)
- Saddle Stitcher Unit of the Booklet Finisher-B1 (Optional) (See "Saddle Stitcher Unit of the Booklet Finisher-B1 (Optional)," on p. 2-86.)
- Professional Puncher Integration Unit-B1 (Optional) (See "Professional Puncher Integration Unit-B1 (Optional)," on p. 2-88.)
- Puncher (Optional) (See "Puncher (Optional)," on p. 2-92.)

3 After you have removed all of the jammed paper in the locations indicated on the touch panel display, restore all levers and covers to their original positions.

4 Continue to follow the procedure and instructions on the touch panel display.

Once you have removed all of the jammed paper in locations other than the feeder, printing or copying resumes.

If there is paper that still needs to be removed, a screen indicating how to clear that paper jam appears on the touch panel display. Repeat the procedure from step 1.

NOTE

You do not have to re-enter the number of copies or prints, even if you are printing multiple sets. The machine automatically recalculates the number of copies or prints to make based on the number of sheets that have jammed.

Main Unit (Fixing Transport Unit)

If a paper jam occurs in the main unit area, a screen prompting you to remove the jammed paper appears on the touch panel display. Check the location of the paper jam, and follow the procedure described below, and the procedure that appears on the touch panel display, to remove the jammed paper.

WARNING

There are some areas inside the machine which are subject to high-voltages. When removing jammed paper or when inspecting the inside of the machine, do not allow necklaces, bracelets, or other metal objects to touch the inside of the machine, as this may result in burns or electrical shock.

1 **Open the front cover of the main unit.**

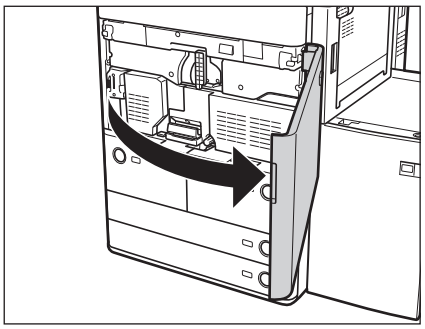

2 **Turn the dial 15 times.**

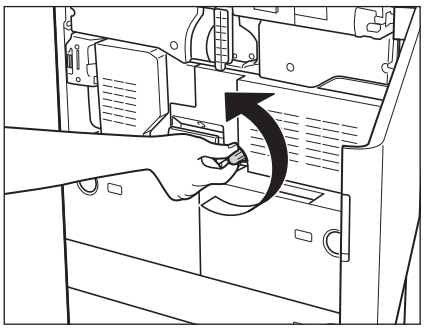

3 **Grip the green lever, and pull out the fixing transport unit.**

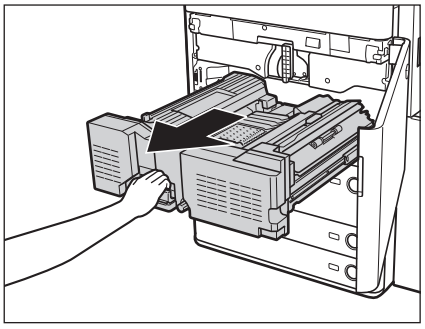

4 Remove any jammed paper.

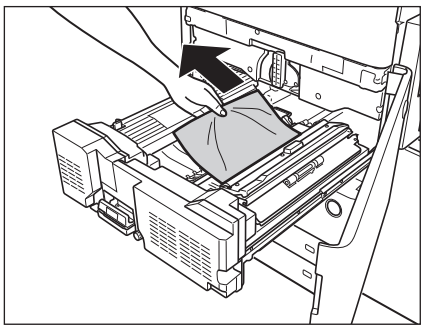

5 Open the edge guide and remove any jammed paper.

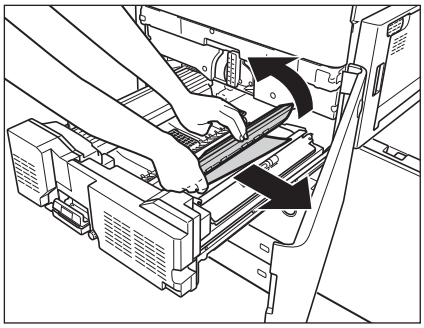

6 Open the inner output guide and remove any jammed paper.

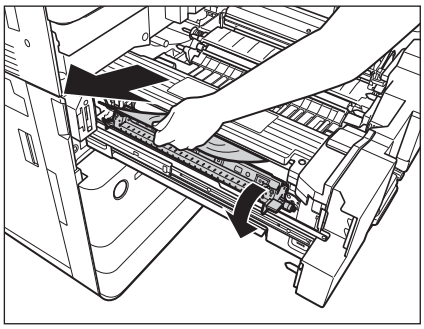

CAUTION

The fixing unit and its surroundings are subject to high-temperatures. When removing jammed paper, take care not to touch anything in this area.

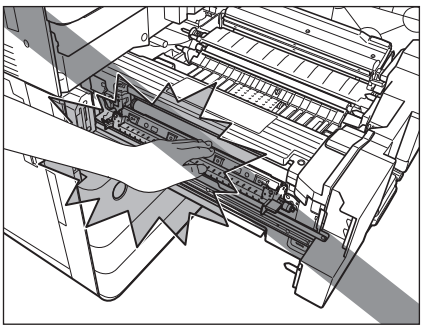

CAUTION

The inner output guide and its surroundings are subject to high-temperatures. When removing jammed paper, take care not to touch anything in this area.

7 Close the inner output guide.

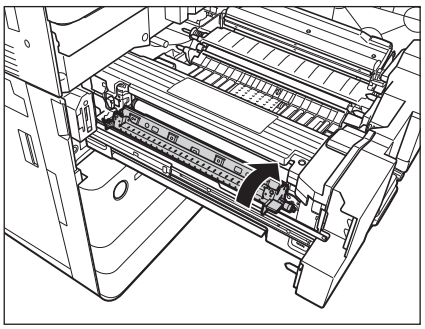

CAUTION

When closing the guide, be careful not to get your fingers caught, as this may result in personal injury.

8 Open the 2-sided guide, and remove any jammed paper.

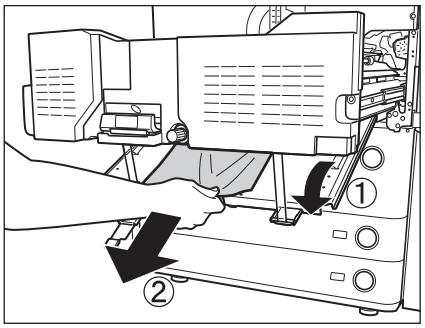

9 Close the 2-sided guide.

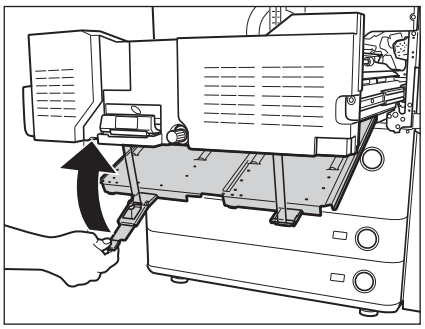

CAUTION

When closing the guide of the fixing transport unit, be careful not to get your fingers caught, as this may result in personal injury.

10 **Gently push the fixing transport unit back into its original position.**

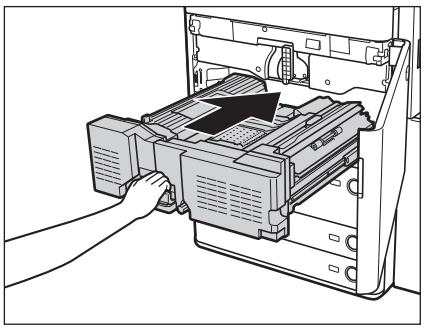

CAUTION

When returning the fixing transport unit to its original position, be careful not to get your fingers caught, as this may result in personal injury.

11 **Gently close the front cover of the main unit.**

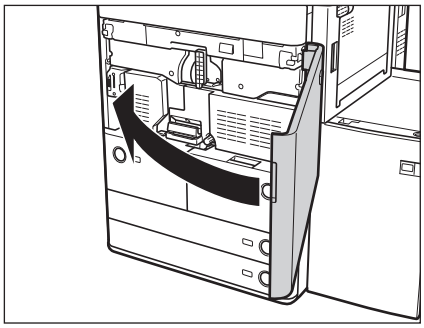

CAUTION

When closing the front cover of the main unit, be careful not to get your fingers caught, as this may result in personal injury.

12 **Follow the instructions on the touch panel display.**

NOTE

The screen indicating the location of the paper jam repeatedly appears on the touch panel display until the paper jam is entirely cleared. For more information, see "Screens Indicating the Locations of Paper Jams," on p. 2-9.

Multi-purpose Tray

If a paper jam occurs inside the Multi-purpose Tray, a screen prompting you to remove the jammed paper appears on the touch panel display. Check the location of the paper jam, and follow the procedure described below, and the procedure that appears on the touch panel display, to remove the jammed paper.

1 **Remove all of the paper that is not jammed from the multi-purpose tray.**

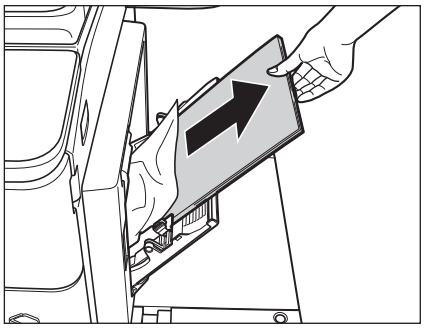

2 Open the upper right cover of the machine.

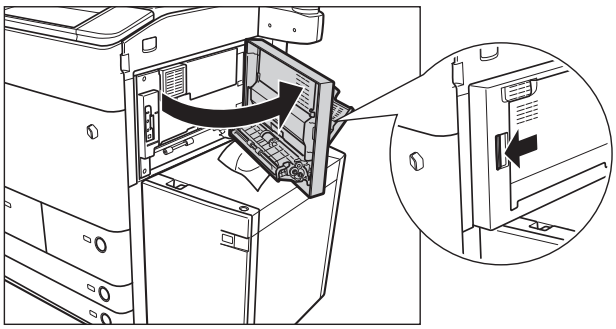

3 Remove any jammed paper.

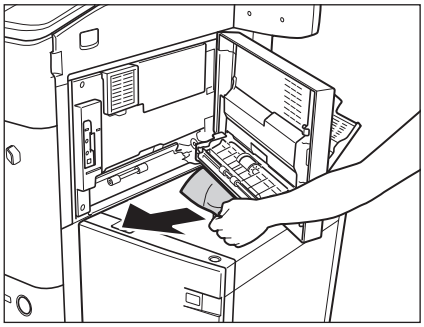

4 Gently close the upper right cover until it clicks into place in the closed position.

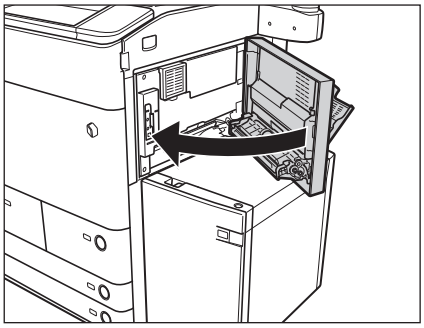

CAUTION

When closing the upper right cover of the main unit, be careful not to get your fingers caught, as this may result in personal injury.

5 Follow the instructions on the touch panel display.

NOTE

The screen indicating the location of the paper jam repeatedly appears on the touch panel display until the paper jam is entirely cleared. For more information, see "Screens Indicating the Locations of Paper Jams," on p. 2-9.

Right Cover of the Machine (When the Multi-drawer Paper Deck-A1 is attached)

If a paper jam occurs in the right cover of the machine, a screen prompting you to remove the jammed paper appears on the touch panel display.Check the location of the paper jam, and follow the procedure described below, and the procedure that appears on the touch panel display, to remove the jammed paper.

CAUTION

- **There are some areas inside the machine which are subject to high-voltages. When removing jammed paper or when inspecting the inside of the machine, do not allow necklaces, bracelets, or other metal objects to touch the inside of the machine, as this may result in burns or electrical shock.**
- **When removing jammed paper, take care not to cut your hands on the edges of the paper.**

1 **Open the front cover of the multi-drawer paper deck.**

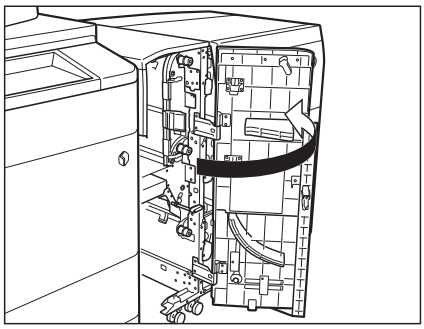

2 **Open the lower right cover of the machine.**

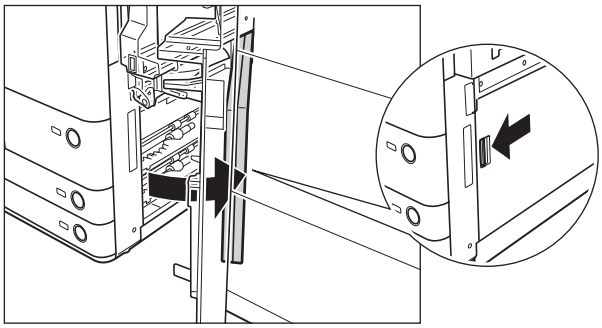

3 **Remove any jammed paper.**

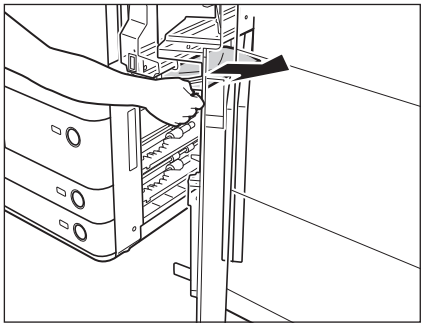

4 Close the lower right cover of the machine.

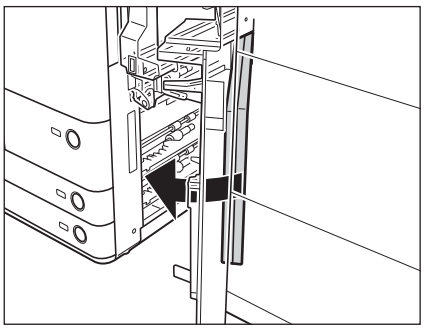

CAUTION

When closing the cover, be careful not to get your fingers caught, as this may result in personal injury.

5 Close the front cover of the multi-drawer paper deck.

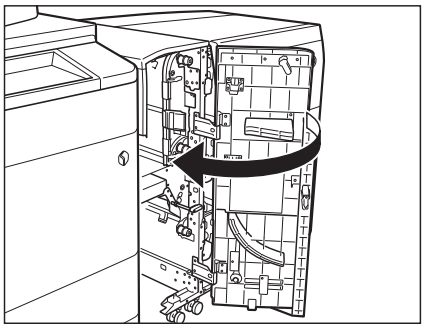

CAUTION

When closing the front cover of the multi-drawer paper deck, be careful not to get your fingers caught, as this may result in personal injury.

6 Follow the instructions on the touch panel display.

NOTE

The screen indicating the location of the paper jam repeatedly appears on the touch panel display until the paper jam is entirely cleared. For more information, see "Screens Indicating the Locations of Paper Jams," on p. 2-9.

Right Cover of the Machine

If a paper jam occurs in the right cover of the machine, a screen prompting you to remove the jammed paper appears on the touch panel display. Check the location of the paper jam, and follow the procedure described below, and the procedure that appears on the touch panel display, to remove the jammed paper.

CAUTION

- **There are some areas inside the machine which are subject to high-voltages. When removing jammed paper or when inspecting the inside of the machine, do not allow necklaces, bracelets, or other metal objects to touch the inside of the machine, as this may result in burns or electrical shock.**
- **When removing jammed paper, take care not to cut your hands on the edges of the paper.**

1 Open the upper right cover of the main unit.

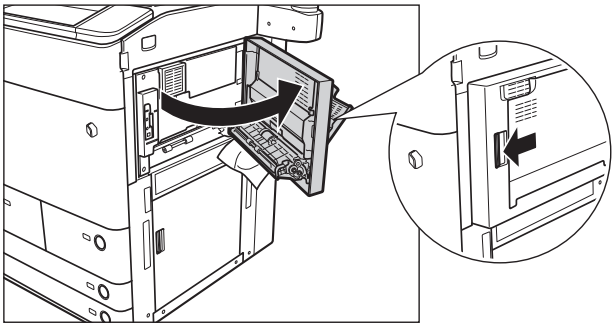

● **When the Paper Deck Unit-A1/POD Deck Lite-A1 is attached:**

☐ Press the release button, and move the paper deck away from the main unit.

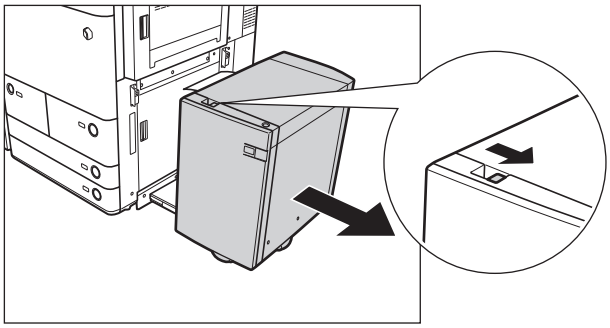

2 Remove any jammed paper.

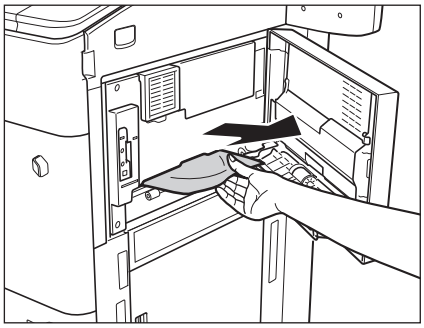

3 Open the lower right cover of the main unit.

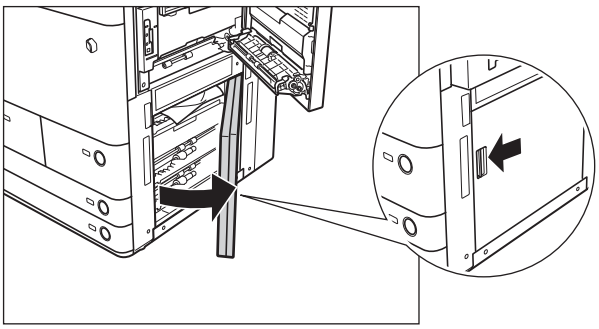

4 Remove any jammed paper.

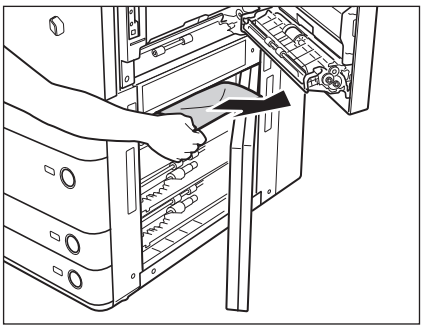

5 Gently close the lower right and upper right covers of the main unit until it clicks into place in the closed position.

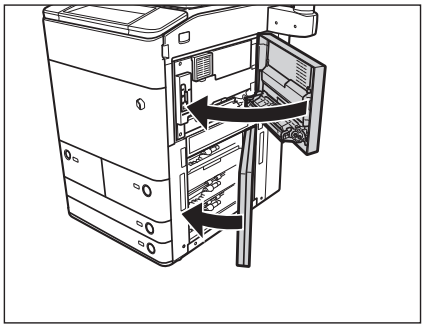

CAUTION

When closing the lower right and upper right covers of the main unit, be careful not to get your fingers caught, as this may result in personal injury.

● **When the Paper Deck Unit-A1/POD Deck Lite-A1 is attached:**

☐ Reconnect the paper deck to the main unit.

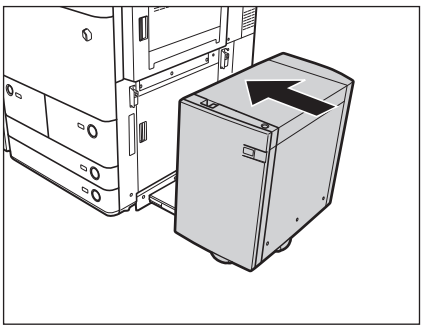

6 Follow the instructions on the touch panel display.

NOTE

The screen indicating the location of the paper jam repeatedly appears on the touch panel display until the paper jam is entirely cleared. For more information, see "Screens Indicating the Locations of Paper Jams," on p. 2-9.

Left Cover

If a paper jam occurs inside the left cover, a screen prompting you to remove the jammed paper appears on the touch panel display. Check the location of the paper jam, and follow the procedure described below, and the procedure that appears on the touch panel display, to remove the jammed paper.

CAUTION

- **There are some areas inside the machine which are subject to high-voltages. When removing jammed paper or when inspecting the inside of the machine, do not allow necklaces, bracelets, or other metal objects to touch the inside of the machine, as this may result in burns or electrical shock.**
- **When removing jammed paper, take care not to cut your hands on the edges of the paper.**
- **When removing paper which has become jammed inside the machine, take care not to cut your hands or injure yourself on the inside of the machine. If you cannot remove the paper, contact your local authorized Canon dealer.**
- **When removing paper which has become jammed inside the machine, take care not to allow the toner on the jammed paper to come into contact with your hands or clothing, as this will dirty your hands or clothing. If they become dirty, wash them immediately with cold water. Washing them with warm water will set the toner, and make it impossible to remove the toner stains.**
- **When removing paper which has become jammed inside the machine, remove the jammed paper gently to prevent the toner on the paper from scattering and getting into your eyes or mouth. If the toner gets into your eyes or mouth, wash them immediately with cold water and immediately consult a physician.**

1 Open the left cover of the main unit.

If the Copy Tray-P1 is attached to the main unit, remove all output paper from the tray. It may be necessary to lift the Copy Tray-P1 up, depending on the paper jam. For more information, see e-Manual > Optional Products (imageRUNNER ADVANCE C9075 PRO/C9065 PRO, Optional Products (imageRUNNER ADVANCE C7065/C7055).

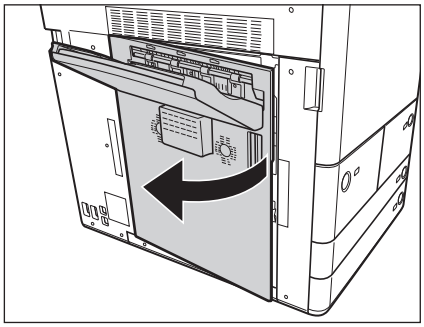

2 Remove any jammed paper.

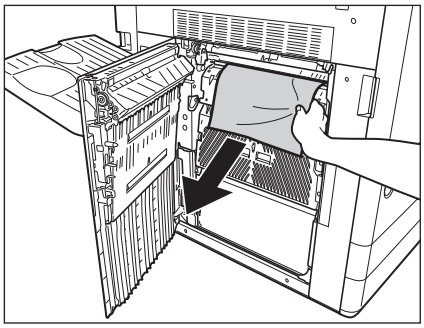

3 Close the left cover of the main unit.

If the Copy Tray-P1 is attached to the main unit, restore it to its original position. For more information, see e-Manual > Optional Products (imageRUNNER ADVANCE C9075 PRO/C9065 PRO), Optional Products (imageRUNNER ADVANCE C7065/C7055).

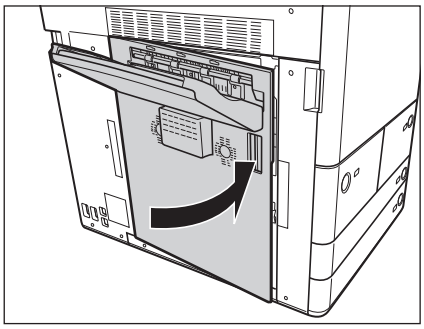

CAUTION

When closing the left cover of the main unit, be careful not to get your fingers caught, as this may result in personal injury.

4 Follow the instructions on the touch panel display.

NOTE

The screen indicating the location of the paper jam repeatedly appears on the touch panel display until the paper jam is entirely cleared. For more information, see "Screens Indicating the Locations of Paper Jams," on p. 2-9.

Left Part of the Machine (When the Buffer Pass Unit-F1 is Attached)

If a paper jam occurs in the left part of the machine, a screen prompting you to remove the jammed paper appears on the touch panel display. Check the location of the paper jam, and follow the procedure described below, and the procedure that appears on the touch panel display, to remove the jammed paper.

CAUTION

- **There are some areas inside the machine which are subject to high-voltages. When removing jammed paper or when inspecting the inside of the machine, do not allow necklaces, bracelets, or other metal objects to touch the inside of the machine, as this may result in burns or electrical shock.**
- **When removing jammed paper, take care not to cut your hands on the edges of the paper.**
- **When removing paper which has become jammed inside the machine, take care not to cut your hands or injure yourself on the inside of the machine. If you cannot remove the paper, contact your local authorized Canon dealer.**
- **When removing paper which has become jammed inside the machine, take care not to allow the toner on the jammed paper to come into contact with your hands or clothing, as this will dirty your hands or clothing. If they become dirty, wash them immediately with cold water. Washing them with warm water will set the toner, and make it impossible to remove the toner stains.**
- **When removing paper which has become jammed inside the machine, remove the jammed paper gently to prevent the toner on the paper from scattering and getting into your eyes or mouth. If the toner gets into your eyes or mouth, wash them immediately with cold water and immediately consult a physician.**

1 Open the front cover of the buffer pass unit.

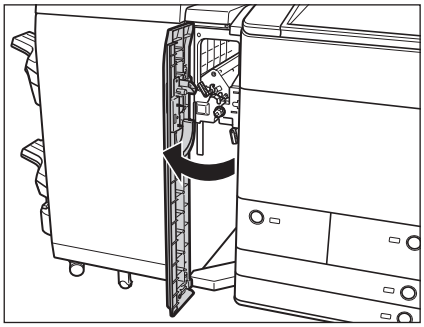

2 **Open the lower guide of the buffer pass unit.**

3 **Open the left cover of the machine from the inner part of the buffer pass unit.**

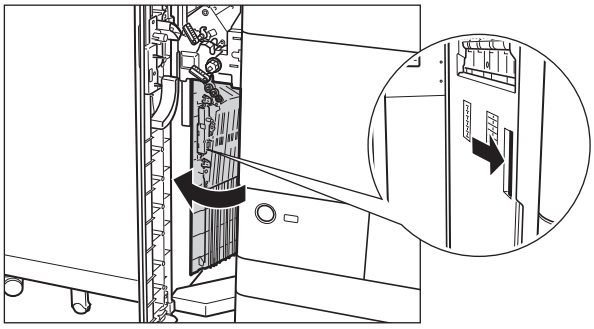

4 **Remove any jammed paper.**

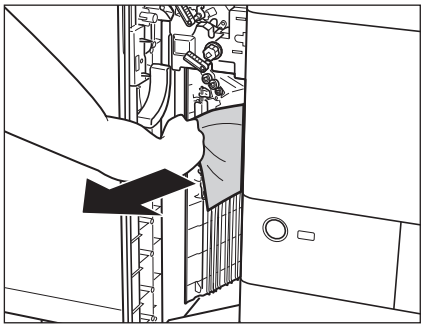

5 **Close the left cover of the machine.**

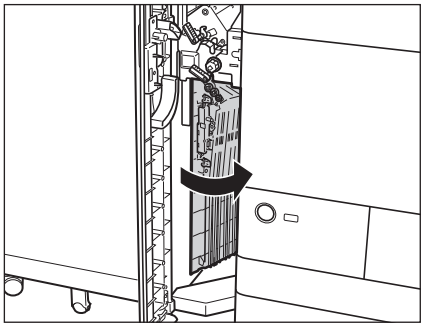

CAUTION

When closing the left cover of the machine, be careful not to get your fingers caught, as this may result in personal injury.

6 Close the lower guide of the buffer pass unit.

CAUTION

When closing the lower guide of the buffer pass unit, be careful not to get your fingers caught, as this may result in personal injury.

7 Close the front cover of the buffer pass unit.

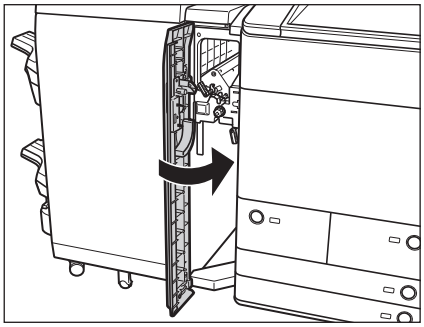

CAUTION

When closing the front cover of the buffer pass unit, be careful not to get your fingers caught, as this may result in personal injury.

8 Follow the instructions on the touch panel display.

NOTE

The screen indicating the location of the paper jam repeatedly appears on the touch panel display until the paper jam is entirely cleared. For more information, see "Screens Indicating the Locations of Paper Jams," on p. 2-9.

Paper Drawers 3 and 4

If a paper jam occurs inside Paper Drawers 3 or 4, a screen prompting you to remove the jammed paper appears on the touch panel display. Check the location of the paper jam, and follow the procedure described below, and the procedure that appears on the touch panel display, to remove the jammed paper.

CAUTION

When removing jammed paper, take care not to cut your hands on the edges of the paper.

1 **Press and release the button on the paper drawer indicated on the touch panel display.**

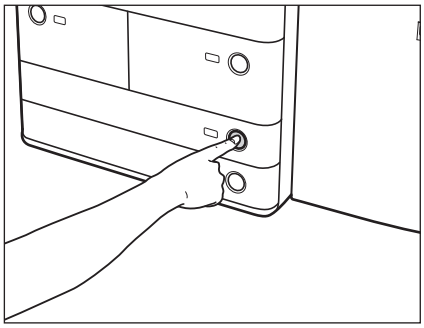

2 **Grip the handle, and pull out the paper drawer until it stops.**

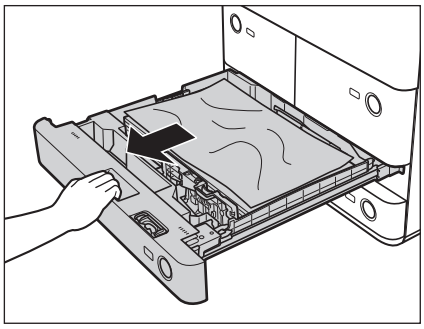

3 **Remove any jammed paper.**

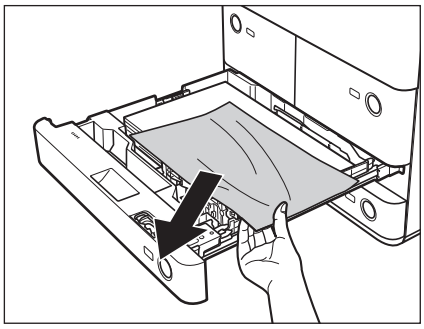

4 **Gently push the paper drawer back into the machine until it clicks into place in the closed position.**

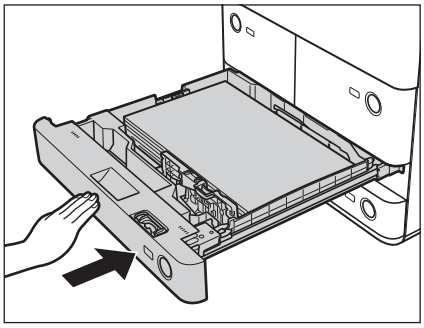

CAUTION

When returning the paper drawer to its original position, be careful not to get your fingers caught, as this may result in personal injury.

5 **Follow the instructions on the touch panel display.**

NOTE

The screen indicating the location of the paper jam repeatedly appears on the touch panel display until the paper jam is entirely cleared. For more information, see "Screens Indicating the Locations of Paper Jams," on p. 2-9.

Paper Drawer (Right)

If a paper jam occurs inside Paper Drawer (Right), a screen prompting you to remove the jammed paper appears on the touch panel display. Check the location of the paper jam, and follow the procedure described below, and the procedure that appears on the touch panel display, to remove the jammed paper.

CAUTION

When removing jammed paper, take care not to cut your hands on the edges of the paper.

1 **Press and release the button on the paper drawer.**

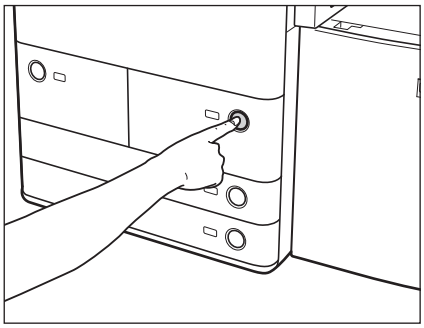

2 Grip the handle, and pull out the paper drawer until it stops.

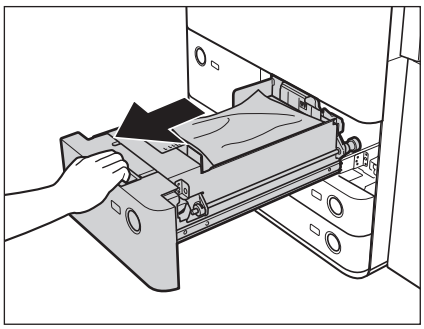

If the paper drawer seems to be stuck, do not pull it out by force. Push it back into the machine and try pressing the release button and pulling it out again.

3 Remove any jammed paper.

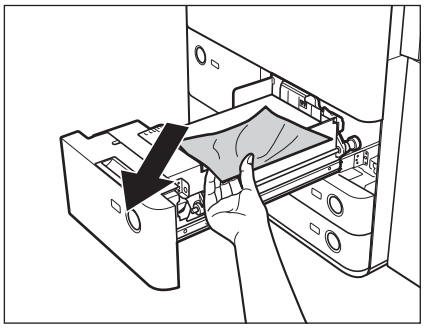

4 Gently push the paper drawer back into the machine until it clicks into place in the closed position.

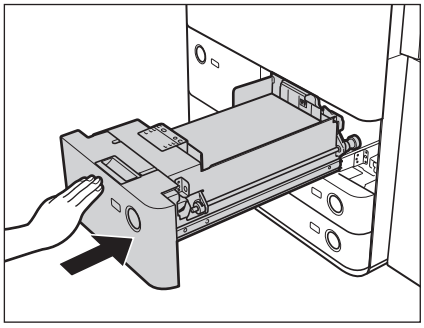

CAUTION

When returning the paper drawer to its original position, be careful not to get your fingers caught, as this may result in personal injury.

5 Follow the instructions on the touch panel display.

NOTE

The screen indicating the location of the paper jam repeatedly appears on the touch panel display until the paper jam is entirely cleared. For more information, see "Screens Indicating the Locations of Paper Jams," on p. 2-9.

Paper Drawer (Left)

If a paper jam occurs inside Paper Drawer (Left), a screen prompting you to remove the jammed paper appears on the touch panel display. Check the location of the paper jam, and follow the procedure described below, and the procedure that appears on the touch panel display, to remove the jammed paper.

CAUTION

When removing jammed paper, take care not to cut your hands on the edges of the paper.

1 Press and release the button on the paper drawer.

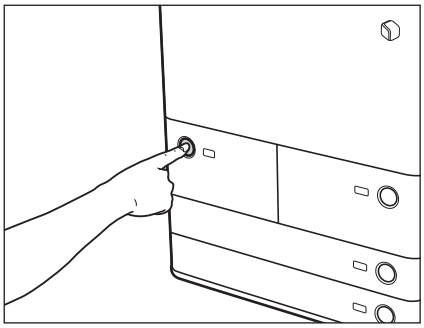

2 Grip the handle, and pull out the paper drawer until it stops.

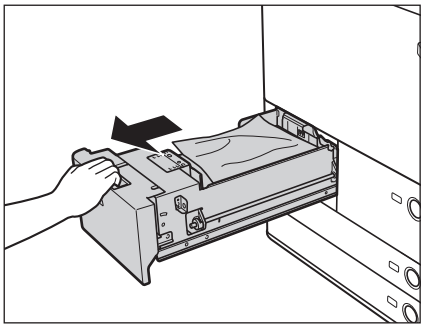

If the paper drawer seems to be stuck, do not pull it out by force. Push it back into the machine and try pressing the release button and pulling it out again.

3 Remove any jammed paper.

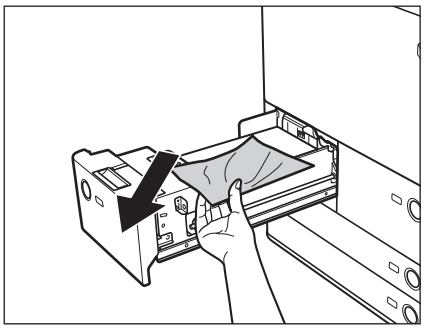

4 **Gently push the paper drawer back into the machine until it clicks into place in the closed position.**

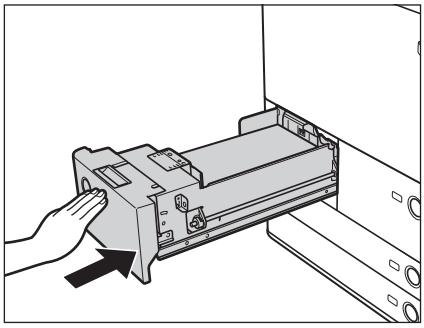

CAUTION

When returning the paper drawer to its original position, be careful not to get your fingers caught, as this may result in personal injury.

5 **Follow the instructions on the touch panel display.**

NOTE

The screen indicating the location of the paper jam repeatedly appears on the touch panel display until the paper jam is entirely cleared. For more information, see "Screens Indicating the Locations of Paper Jams," on p. 2-9.

Buffer Pass Unit-F1

If a paper jam occurs inside the Buffer Pass Unit-F1, a screen prompting you to remove the jammed paper appears on the touch panel display. Check the location of the paper jam, and follow the procedure described below, and the procedure that appears on the touch panel display, to remove the jammed paper.

WARNING

There are some areas inside the machine which are subject to high-voltages. When removing jammed paper or when inspecting the inside of the machine, do not allow necklaces, bracelets, or other metal objects to touch the inside of the machine, as this may result in burns or electrical shock.

CAUTION

- **When removing jammed paper, take care not to cut your hands on the edges of the paper.**
- **When removing paper which has become jammed inside the machine, take care not to cut your hands or injure yourself on the inside of the machine. If you cannot remove the paper, contact your local authorized Canon dealer.**
- **When removing paper which has become jammed inside the machine, take care not to allow the toner on the jammed paper to come into contact with your hands or clothing, as this will dirty your hands or clothing. If they become dirty, wash them immediately with cold water. Washing them with warm water will set the toner, and make it impossible to remove the toner stains.**
- **When removing paper which has become jammed inside the machine, remove the jammed paper gently to prevent the toner on the paper from scattering and getting into your eyes or mouth. If the toner gets into your eyes or mouth, wash them immediately with cold water and immediately consult a physician.**

1 **Open the front left cover of the buffer pass unit.**

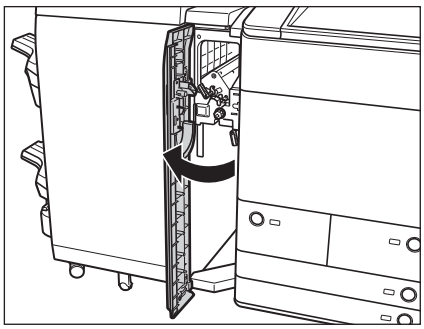

2 Open the lower guide of the buffer pass unit.

3 Open the upper guide of the buffer pass unit.

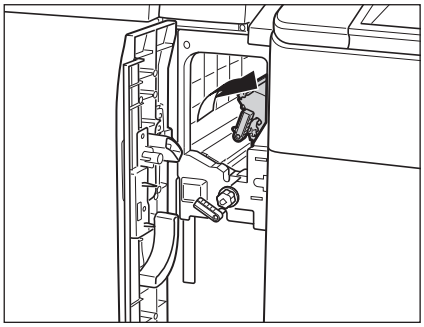

4 Turn the feed dial, and remove any jammed paper.

If the feed dial is turned to the right, the jammed paper comes out from the lower guide. If the feed dial is turned to the left, the jammed paper comes out from the upper guide.

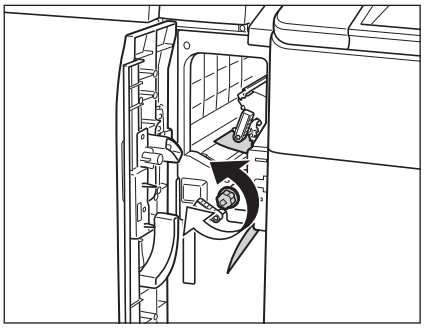

Remove paper from upper and lower guides.

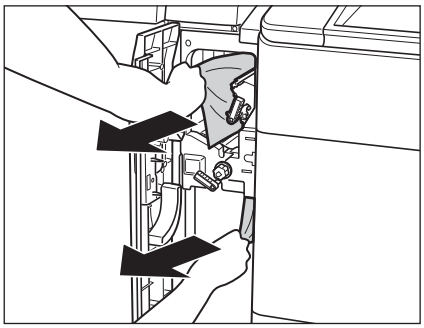

5 Close the upper guide of the buffer pass unit.

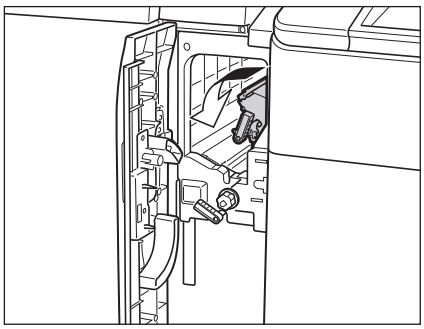

CAUTION

When closing the upper guide of the buffer pass unit, be careful not to get your fingers caught, as this may result in personal injury.

6 Close the lower guide of the buffer pass unit.

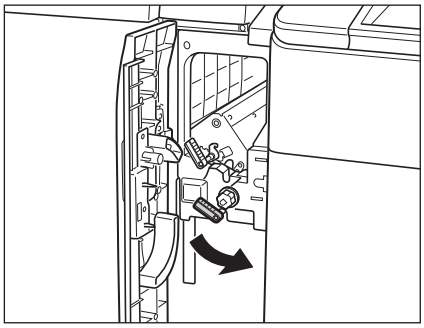

CAUTION

When closing the lower guide of the buffer pass unit, be careful not to get your fingers caught, as this may result in personal injury.

7 Close the front cover of the buffer pass unit.

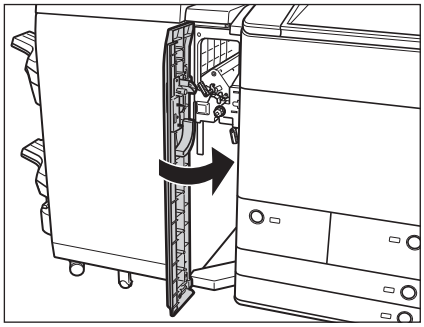

CAUTION

When closing the front cover of the buffer pass unit, be careful not to get your fingers caught, as this may result in personal injury.

8 Follow the instructions on the touch panel display.

NOTE

The screen indicating the location of the paper jam repeatedly appears on the touch panel display until the paper jam is entirely cleared. For more information, see "Screens Indicating the Locations of Paper Jams," on p. 2-9.

Duplex Color Image Reader Unit-A1/Color Image Reader Unit-A1 (Optional)

If a paper jam occurs in the Feeder, a screen prompting you to remove the jammed paper appears on the touch panel display. Check the location of the paper jam, and follow the procedure described below, and the procedure that appears on the touch panel display, to remove the jammed originals.

WARNING

There are some areas inside the machine which are subject to high-voltages. When removing jammed paper or when inspecting the inside of the machine, do not allow necklaces, bracelets, or other metal objects to touch the inside of the machine, as this may result in burns or electrical shock.

CAUTION

When removing jammed originals or paper, take care not to cut your hands on the edges of the originals or paper.

1 Remove originals from the original supply tray.

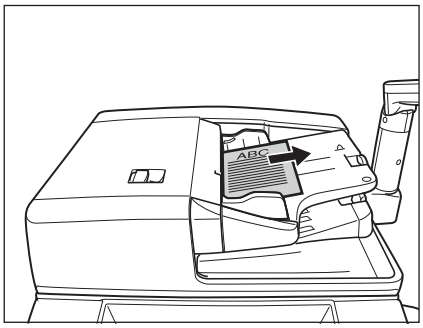

2 Pull the lever, and open the feeder cover.

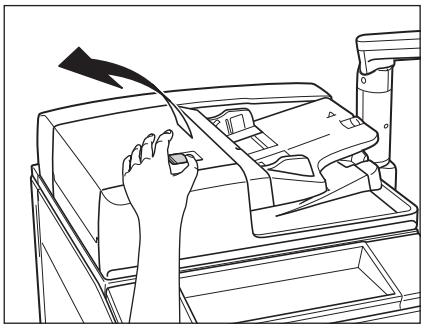

3 Remove any jammed originals.

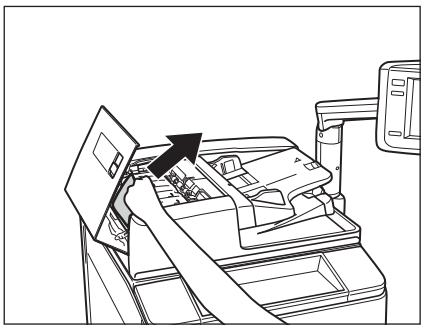

If there is difficulty in removing jammed paper, do not try to remove it forcibly, and proceed to step 4.

4 Open the inner cover, holding it by its front tab.

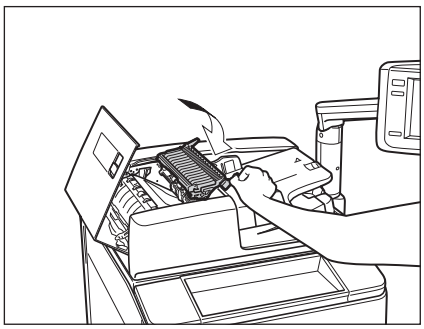

5 Turn the green feed dial, and remove any jammed originals.

6 Close the inner cover.

CAUTION

When closing the inner cover, be careful not to get your fingers caught, as this may result in personal injury.

7 Close the feeder cover.

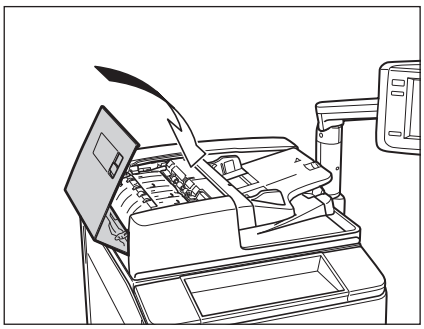

CAUTION

When closing the feeder cover, be careful not to get your fingers caught, as this may result in personal injury.

8 Lift the feeder, and remove any jammed originals.

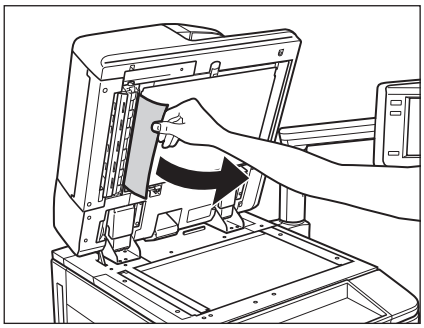

9 Close the feeder.

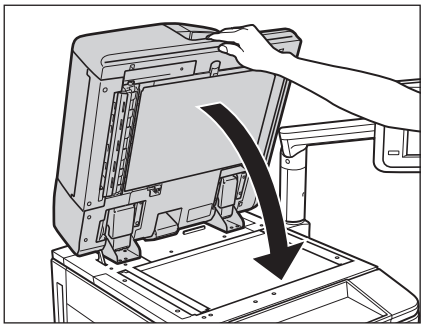

CAUTION

- **Close the feeder gently to avoid catching your hand, as this may result in personal injury.**
- **Be aware that the light emitted from the platen glass may be very bright when closing the feeder.**

10 Follow the instructions on the touch panel display.

NOTE

The screen indicating the location of the paper jam repeatedly appears on the touch panel display until the paper jam is entirely cleared. For more information, see "Screens Indicating the Locations of Paper Jams," on p. 2-9.

Paper Deck Unit-A1/POD Deck Lite-A1 (Optional)

If a paper jam occurs in the Paper Deck Unit-A1/POD Deck Lite-A1, a screen prompting you to remove the jammed paper appears on the touch panel display. Check the location of the paper jam, and follow the procedure described below, and the procedure that appears on the touch panel display, to remove the jammed paper.

WARNING

There are some areas inside the machine which are subject to high-voltages. When removing jammed paper or when inspecting the inside of the machine, do not allow necklaces, bracelets, or other metal objects to touch the inside of the machine, as this may result in burns or electrical shock.

CAUTION

When removing jammed paper, take care not to cut your hands on the edges of the paper.

1 **Press the release button, and move the paper deck away from the main unit.**

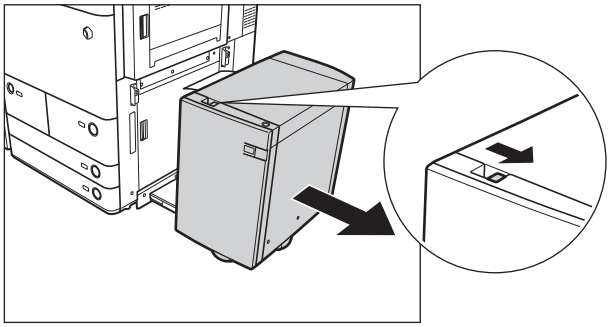

2 **Remove any jammed paper from the feeding area.**

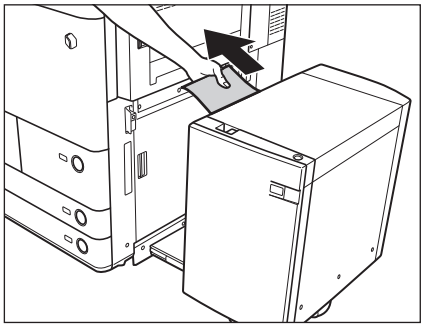

Paper can also be jammed in the feeding slot on the side of the main unit. Remove any jammed paper from the feeding slot.

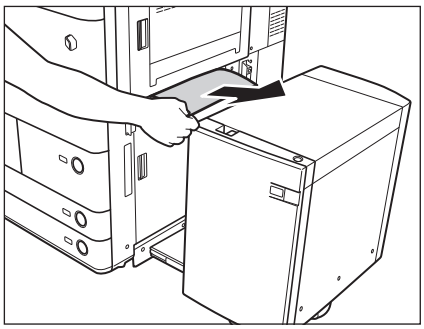

3 Reconnect the paper deck to the main unit.

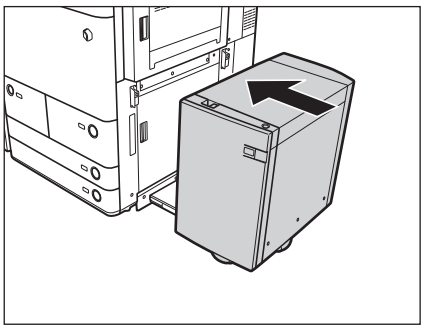

If the screen indicating the paper jam is no longer displayed after reconnecting the paper deck to the main unit, proceed to step 7.

CAUTION

When reconnecting the paper deck to the main unit, be careful not to get your fingers caught, as this may result in personal injury.

4 Press the open button to open the paper deck.

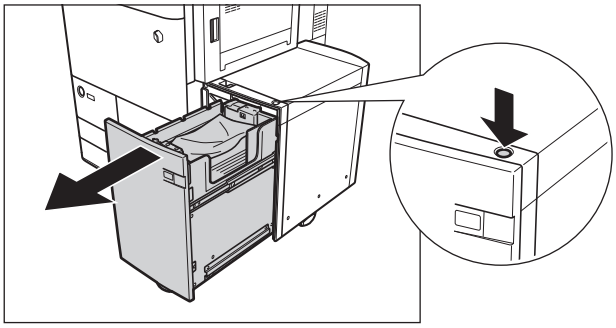

The inside lifter descends automatically.

IMPORTANT

If the machine is in the Sleep mode (the touch panel is not displayed, and only the main power indicator is lit), you may not be able to open the paper deck unit. In this case, press the control panel power switch to reactivate the machine, and then press the open button on the paper deck unit.

5 Remove any jammed paper.

Look carefully, as jammed paper may be difficult to see.

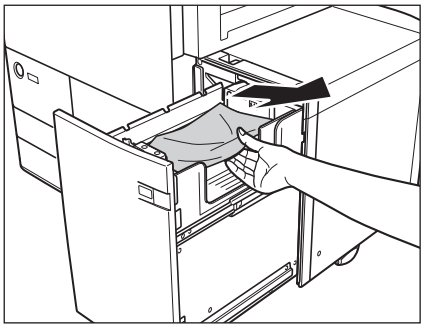

6 Close the paper deck.

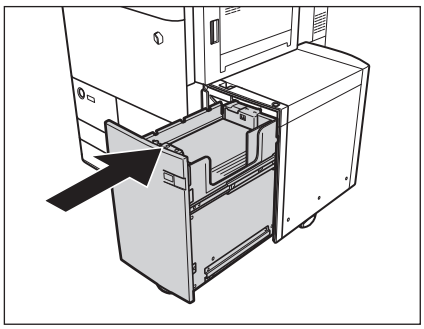

CAUTION

When closing the paper deck, be careful not to get your fingers caught, as this may result in personal injury.

7 Follow the instructions on the touch panel display.

NOTE

The screen indicating the location of the paper jam repeatedly appears on the touch panel display until the paper jam is entirely cleared. For more information, see "Screens Indicating the Locations of Paper Jams," on p. 2-9.

Front Cover of the Multi-drawer Paper Deck-A1 (Optional)

If a paper jam occurs in the Multi-drawer Paper Deck-A1, a screen prompting you to remove the jammed paper appears on the touch panel display. Check the location of the paper jam, and follow the procedure described below, and the procedure that appears on the touch panel display, to remove the jammed paper.

CAUTION

- **When removing jammed originals or paper, take care not to cut your hands on the edges of the originals or paper.**
- **When removing jammed originals or paper, take care not to cut your hands on the inside of the machine. If you cannot remove the paper, contact your local authorized Canon dealer.**

1 Open the front cover of the multi-drawer paper deck.

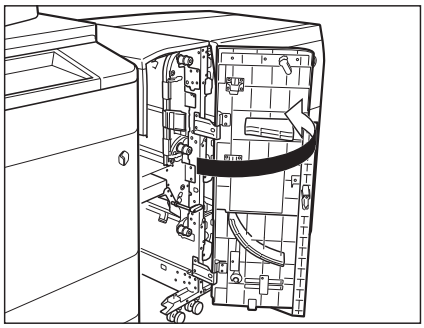

2 Open the D-A1 guide.

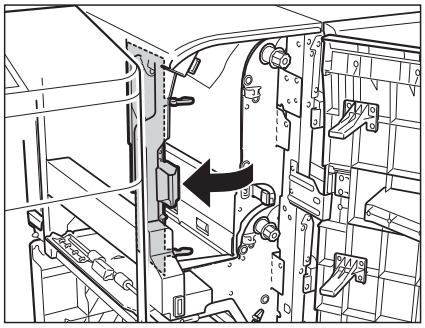

3 **Remove any jammed paper.**

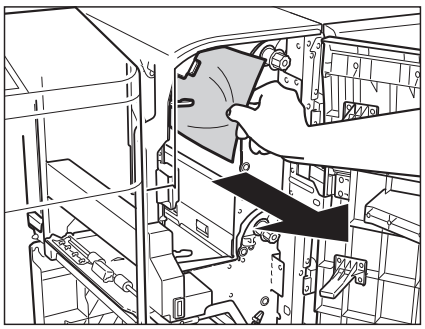

4 **Turn the D-A2 dial in the direction of the arrow (counterclockwise).**

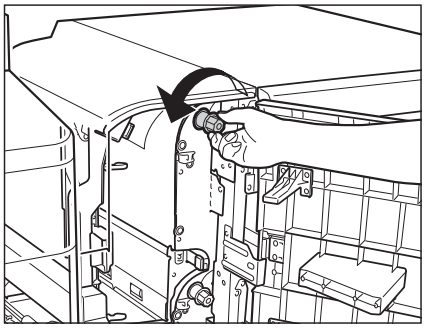

5 **Remove any jammed paper.**

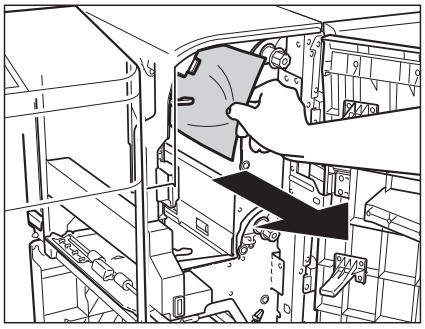

6 **Open the D-A3 guide.**

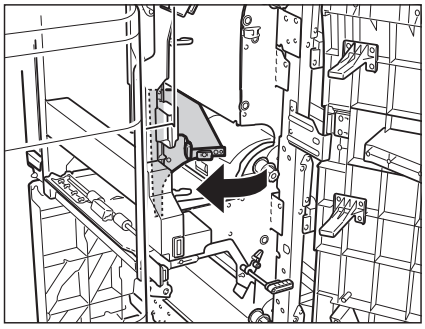

7 Remove any jammed paper.

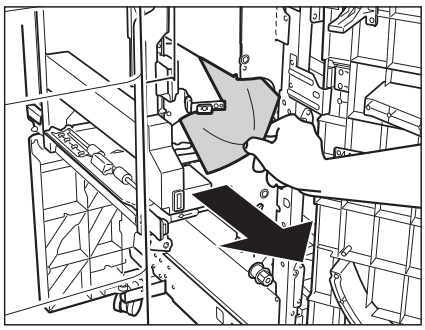

8 Turn the D-A4 dial in the direction of the arrow (counterclockwise).

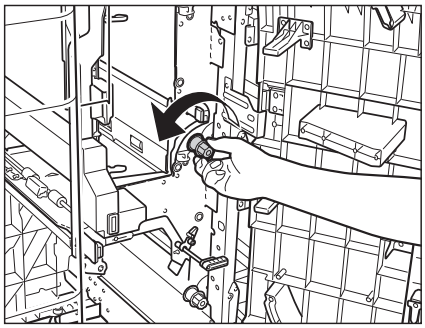

9 Remove any jammed paper.

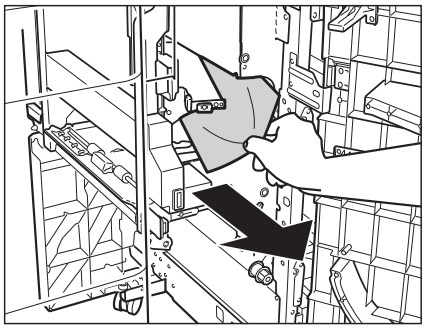

10 Close the D-A3 guide.

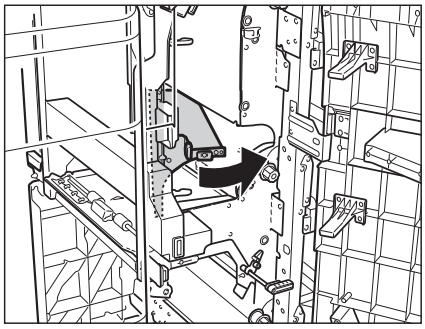

CAUTION

When closing the guide, be careful not to get your fingers caught, as this may result in personal injury.

11 Close the D-A1 guide.

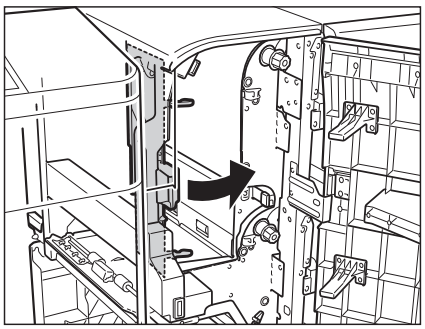

CAUTION

When closing the guide, be careful not to get your fingers caught, as this may result in personal injury.

12 Open the D-B1 guide until it locks into place.

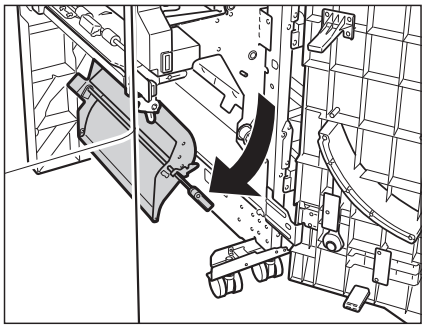

13 Remove any jammed paper.

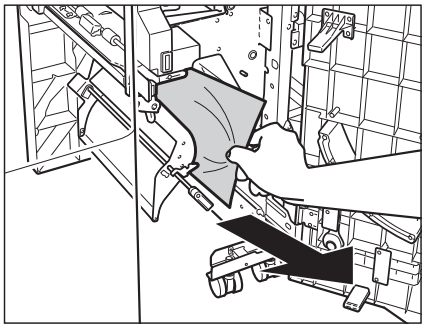

14 Turn the D-B2 dial in the direction of the arrow (counterclockwise).

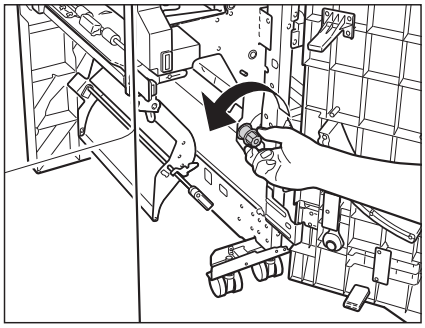

15 Remove any jammed paper.

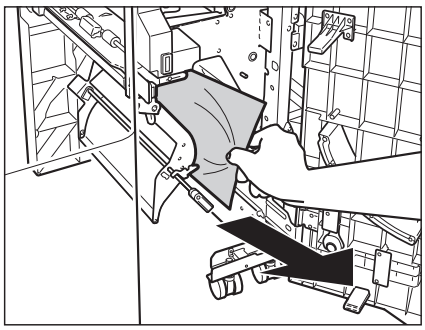

16 Close the D-B1 guide.

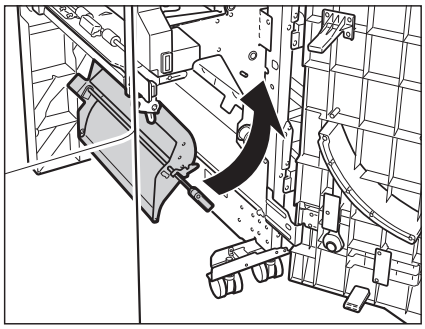

CAUTION

When closing the guide, be careful not to get your fingers caught, as this may result in personal injury.

17 Close the front cover of the multi-drawer paper deck.

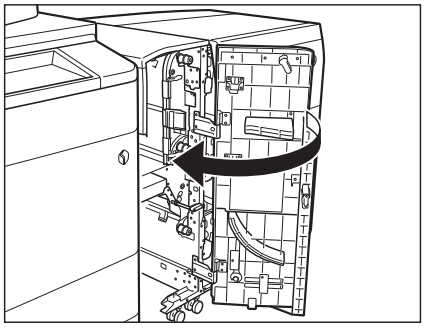

CAUTION

When closing the front cover of the multi-drawer paper deck, be careful not to get your fingers caught, as this may result in personal injury.

18 Follow the instructions on the touch panel display.

NOTE

The screen indicating the location of the paper jam repeatedly appears on the touch panel display until the paper jam is entirely cleared. For more information, see "Screens Indicating the Locations of Paper Jams," on p. 2-9.

Paper Decks of the Multi-drawer Paper Deck-A1(Optional)

If a paper jam occurs in the Multi-drawer Paper Deck-A1, a screen prompting you to remove the jammed paper appears on the touch panel display. Check the location of the paper jam, and follow the procedure described below, and the procedure that appears on the touch panel display, to remove the jammed paper.

CAUTION

- **When removing jammed originals or paper, take care not to cut your hands on the edges of the originals or paper.**
- **When removing jammed originals or paper, take care not to cut your hands on the inside of the machine. If you cannot remove the paper, contact your local authorized Canon dealer.**

1 **Push the open button of the paper deck indicated on the touch panel display.**

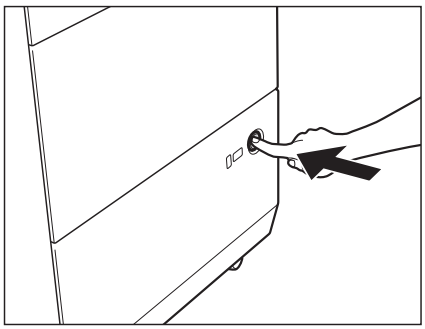

2 **Grip the handle, and pull out the paper deck until it stops.**

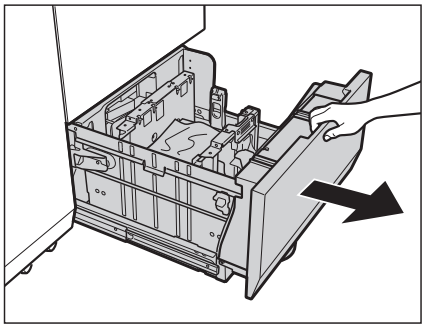

IMPORTANT

- Do not pull out the paper deck by force.
- If the machine is in the Sleep mode (the touch panel is not displayed, and only the main power indicator is lit), you may not be able to open the paper deck. In this case, press the control panel power switch to reactivate the machine, and then press the open button on the paper deck.

3 **Remove any jammed paper.**

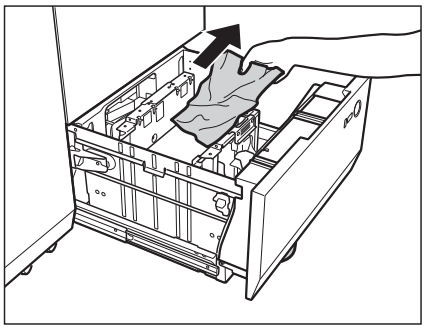

4 **Gently push the paper deck back into the machine until it clicks into place in the closed position.**

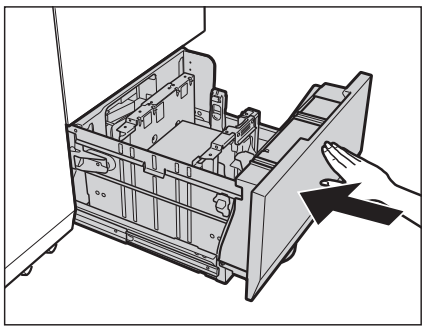

CAUTION

When returning the paper deck to its original position, be careful not to get your fingers caught, as this may result in personal injury.

5 **Follow the instructions on the touch panel display.**

NOTE

The screen indicating the location of the paper jam repeatedly appears on the touch panel display until the paper jam is entirely cleared. For more information, see "Screens Indicating the Locations of Paper Jams," on p. 2-9.

Document Insertion Unit-H1 (Optional)

If a paper jam occurs inside the Document Insertion Unit-H1, a screen prompting you to remove the jammed paper appears on the touch panel display. Check the location of the paper jam, and follow the procedure described below, and the procedure that appears on the touch panel display, to remove the jammed paper.

CAUTION

- **When removing jammed originals or paper, take care not to cut your hands on the edges of the originals or paper.**
- **When removing jammed originals or paper, take care not to cut your hands on the inside of the machine. If you cannot remove the paper, contact your local authorized Canon dealer.**
- **The part of the Document Insertion Unit-H1 may interfere with the finisher when clearing jams. Lift up the insertion unit before removing jams from the finisher.**

1 **Remove all of the paper that is not jammed from the document insertion unit.**

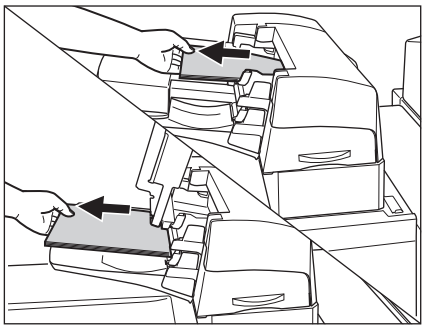

2 **Open the upper cover (I-I1) of the document insertion unit, and remove any jammed paper.**

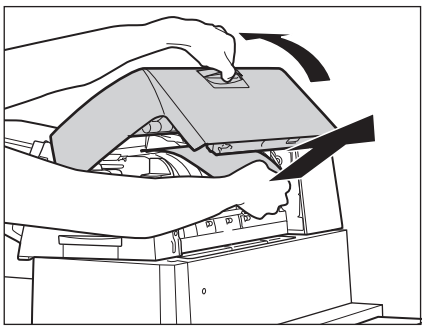

3 **Open the guide (I-I2), and remove any jammed paper.**

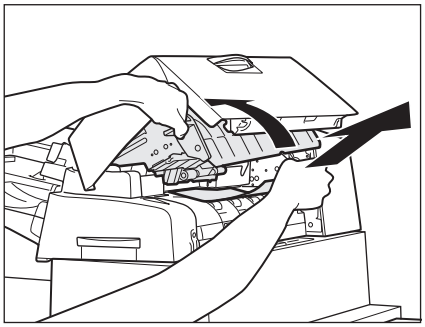

4 **Close the guide (I-I2), and then the upper cover (I-I1).**

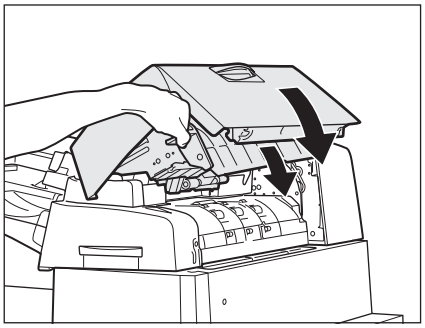

CAUTION

When closing the guide and the upper cover, be careful not to get your fingers caught, as this may result in personal injury.

5 **Open the document insertion unit.**

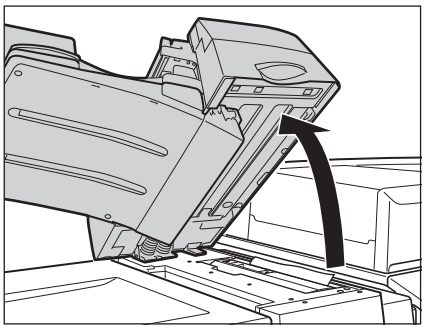

6 Open the guide (I-I3).

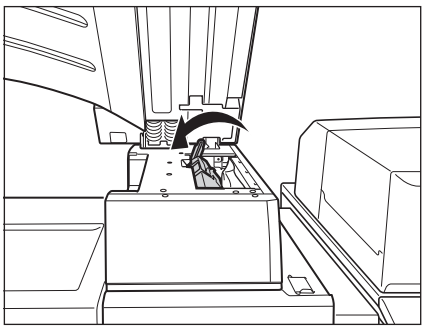

7 Remove any jammed paper.

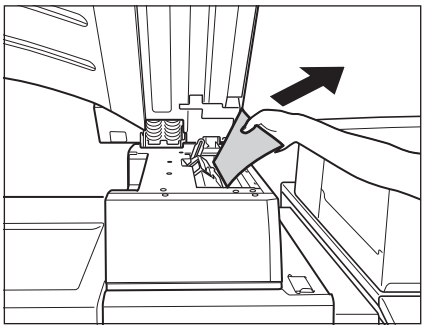

8 Close the guide (I-I3).

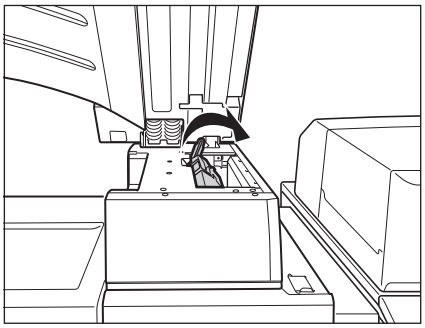

CAUTION

When closing the guide, be careful not to get your fingers caught, as this may result in personal injury.

9 Close the document insertion unit.

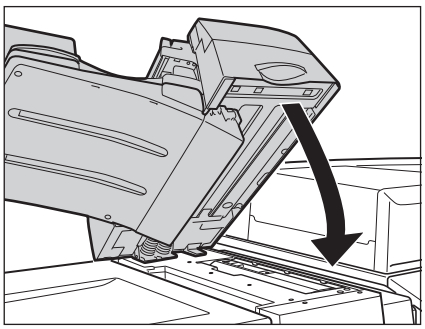

CAUTION

When closing the document insertion unit, be careful not to get your fingers caught, as this may result in personal injury.

10 Open the front cover of the document insertion unit.

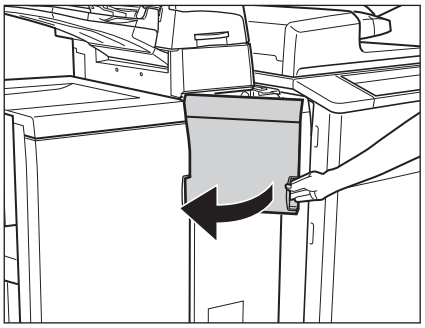

11 Open the guide (I-A1).

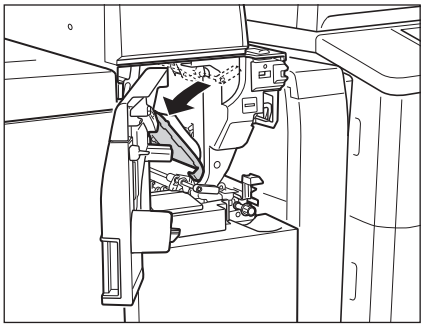

CAUTION

Open the guide gently so that you do not hit your hand.

12 Remove any jammed paper.

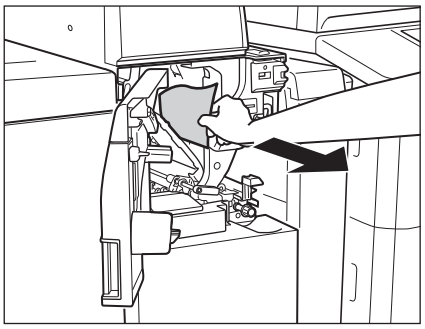

13 Close the guide (I-A1).

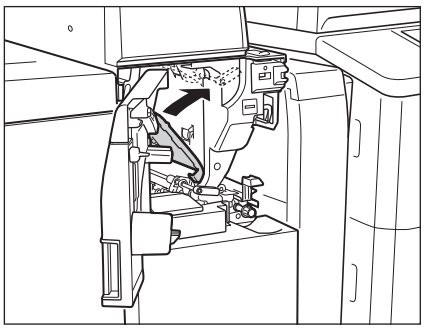

CAUTION

When closing the guide, be careful not to get your fingers caught, as this may result in personal injury.

14 Open the guide (I-A2).

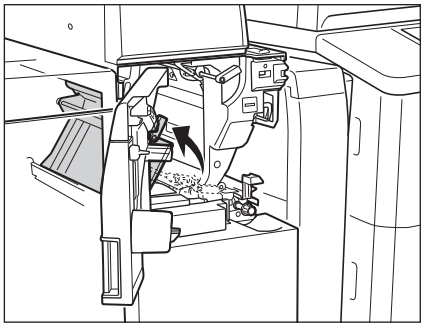

CAUTION

Open the guide gently so that you do not hit your hand.

15 Turn the dial (I-A3) in the direction of the arrow (counterclockwise).

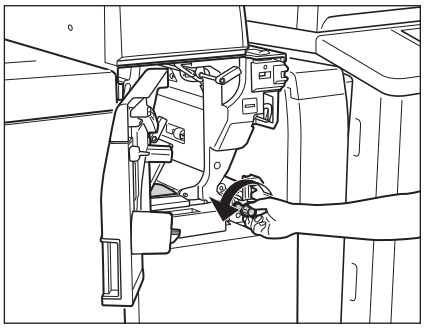

16 Remove any jammed paper.

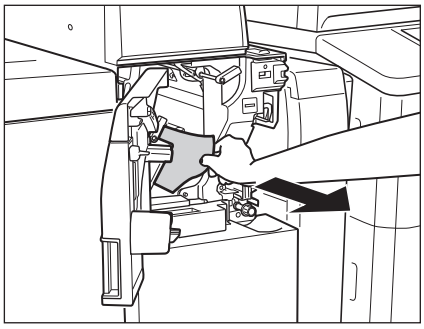

17 Close the guide (I-A2).

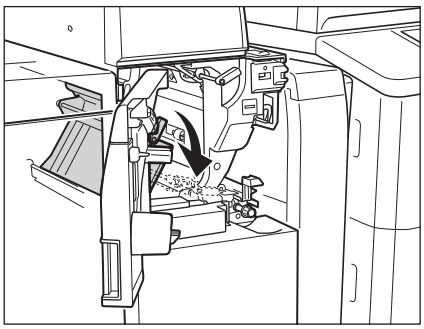

CAUTION

When closing the guide, be careful not to get your fingers caught, as this may result in personal injury.

18 Close the front cover of the document insertion unit.

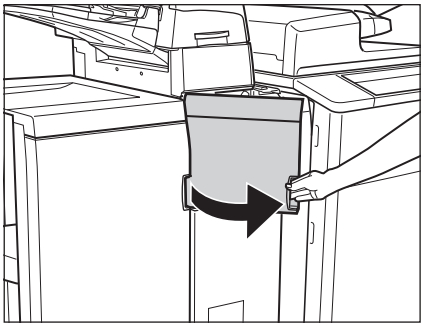

CAUTION

When closing the front cover of the document insertion unit, be careful not to get your fingers caught, as this may result in personal injury.

NOTE

If the paper jam message is displayed even after the paper jam is cleared, check whether there is any paper left by opening the entrance guide.

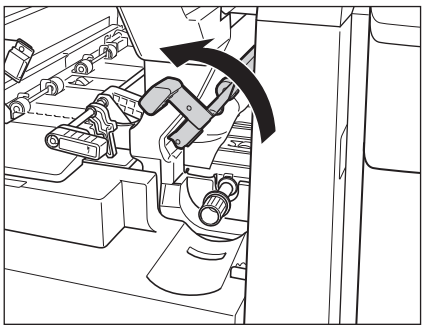

19 **Reload the paper into the document insertion unit.**

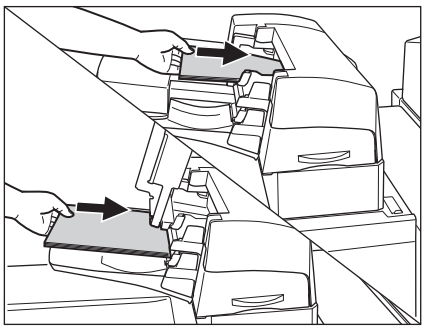

20 **Follow the instructions on the touch panel display.**

NOTE

The screen indicating the location of the paper jam repeatedly appears on the touch panel display until the paper jam is entirely cleared. For more information, see "Screens Indicating the Locations of Paper Jams," on p. 2-9.

Insertion Unit of the Document Insertion/Folding Unit-G1/Document Insertion Unit-J1 (Optional)

If a paper jam occurs insertion unit of the Document Insertion/Folding Unit-G1/Document Insertion Unit-J1, a screen prompting you to remove the jammed paper appears on the touch panel display. Check the location of the paper jam, and follow the procedure described below, and the procedure that appears on the touch panel display, to remove the jammed paper.

WARNING

There are some areas inside the machine which are subject to high-voltages. When removing jammed paper or when inspecting the inside of the machine, do not allow necklaces, bracelets, or other metal objects to touch the inside of the machine, as this may result in burns or electrical shock.

CAUTION

- **When removing jammed paper, take care not to cut your hands on the edges of the paper.**
- **When removing paper which has become jammed inside the machine, take care not to cut your hands or injure yourself on the inside of the machine. If you cannot remove the paper, contact your local authorized Canon dealer.**
- **When removing paper which has become jammed inside the machine, take care not to allow the toner on the jammed paper to come into contact with your hands or clothing, as this will dirty your hands or clothing. If they become dirty, wash them immediately with cold water. Washing them with warm water will set the toner, and make it impossible to remove the toner stains.**
- **When removing paper which has become jammed inside the machine, remove the jammed paper gently to prevent the toner on the paper from scattering and getting into your eyes or mouth. If the toner gets into your eyes or mouth, wash them immediately with cold water and immediately consult a physician.**

1 **Open the top cover of the document insertion/folding unit/document insertion unit.**

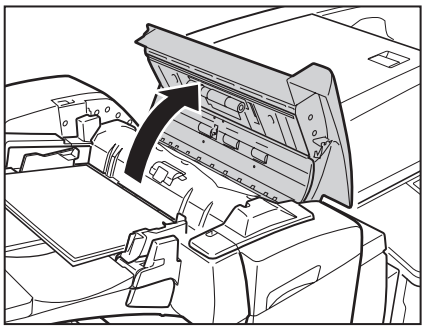

2 **Remove all of the paper that is not jammed.**

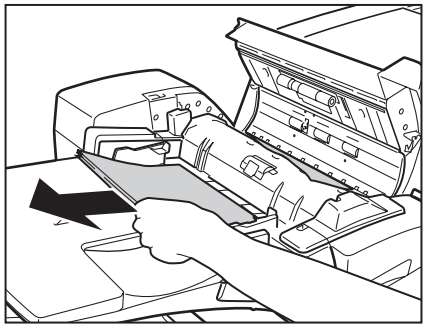

3 **Remove any jammed paper.**

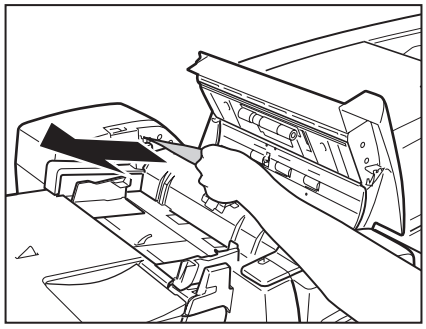

4 **Close the top of the document insertion/folding unit/document insertion unit.**

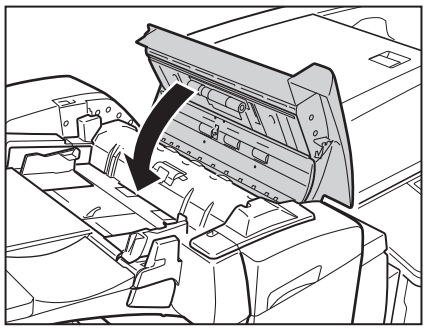

CAUTION

When closing the top cover of the document insertion/folding unit/document insertion unit, be careful not to get your fingers caught, as this may result in personal injury.

5 **Open the front cover of the document insertion/folding unit/document insertion unit.**

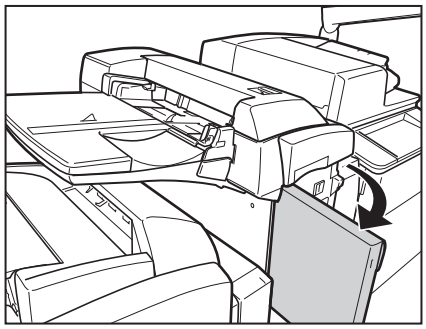

6 Open the insertion unit.

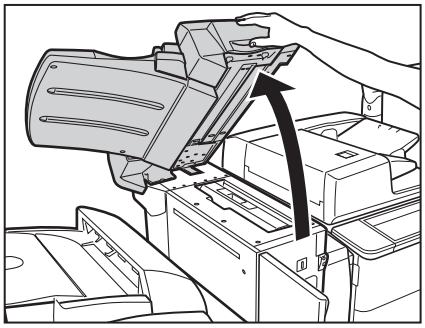

7 Open the delivery unit, amd remove the jammed paper.

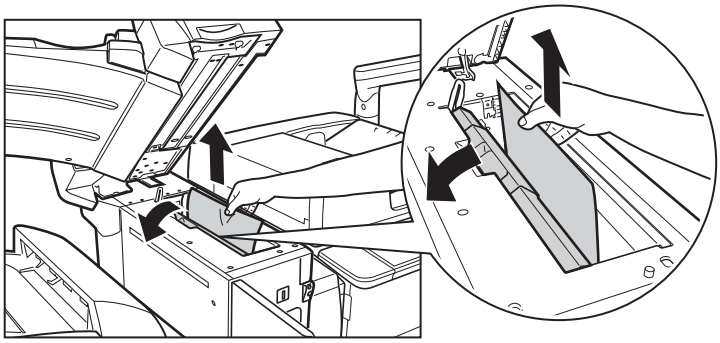

8 Close the delivery unit.

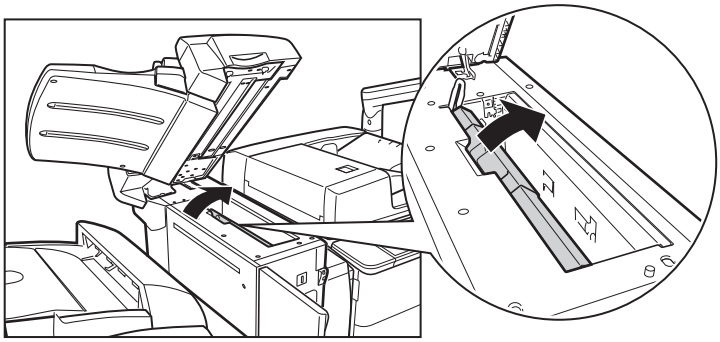

CAUTION

When closing the delivery unit, be careful not to get your fingers caught, as this may result in personal injury.

9 Close the insertion unit.

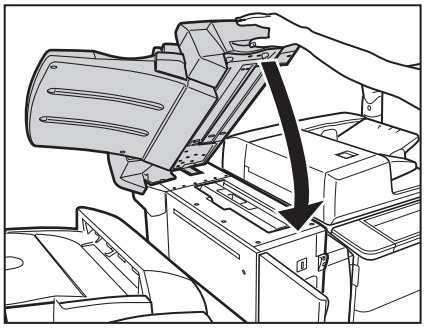

CAUTION

When closing the insertion unit, be careful not to get your fingers caught, as this may result in personal injury.

10 **Close the front cover of the document insertion/folding unit/document insertion unit.**

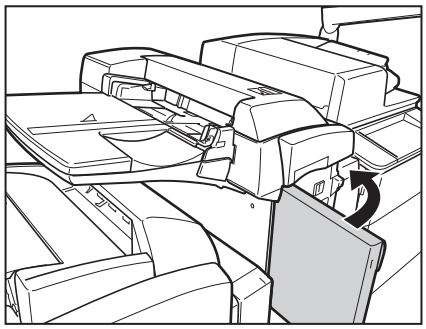

CAUTION

When closing the front cover of the document insertion/folding unit/document insertion unit, be careful not to get your fingers caught, as this may result in personal injury.

11 **Follow the instructions on the touch panel display.**

NOTE

The screen indicating the location of the paper jam repeatedly appears on the touch panel display until the paper jam is entirely cleared. For more information, see "Screens Indicating the Locations of Paper Jams," on p. 2-9.

Inside the Insertion Unit of the Document Insertion/Folding Unit-G1/ Document Insertion Unit-J1 (Optional)

If a paper jam occurs inside the Document Insertion/Folding Unit-G1/Document Insertion Unit-J1, a screen prompting you to remove the jammed paper appears on the touch panel display. Check the location of the paper jam, and follow the procedure described below, and the procedure that appears on the touch panel display, to remove the jammed paper.

WARNING

There are some areas inside the machine which are subject to high-voltages. When removing jammed paper or when inspecting the inside of the machine, do not allow necklaces, bracelets, or other metal objects to touch the inside of the machine, as this may result in burns or electrical shock.

CAUTION

- **When removing jammed paper, take care not to cut your hands on the edges of the paper.**
- **When removing paper which has become jammed inside the machine, take care not to cut your hands or injure yourself on the inside of the machine. If you cannot remove the paper, contact your local authorized Canon dealer.**
- **When removing paper which has become jammed inside the machine, take care not to allow the toner on the jammed paper to come into contact with your hands or clothing, as this will dirty your hands or clothing. If they become dirty, wash them immediately with cold water. Washing them with warm water will set the toner, and make it impossible to remove the toner stains.**
- **When removing paper which has become jammed inside the machine, remove the jammed paper gently to prevent the toner on the paper from scattering and getting into your eyes or mouth. If the toner gets into your eyes or mouth, wash them immediately with cold water and immediately consult a physician.**

IMPORTANT

Take care when handling the optional equipment that is attached to the machine. When an optional unit's cover is opened to replace a staple cartridge, discard punch waste, or clear paper or staple jams, prints may still be output if other optional units are operating normally, and are not involved in the paper or staple jam removal procedure.

1 **Open the front cover of the document insertion/folding unit/document insertion unit.**

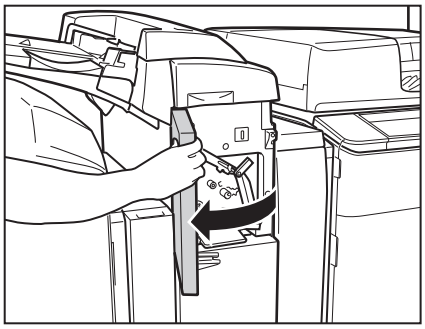

2 **Open the upper delivery guide.**

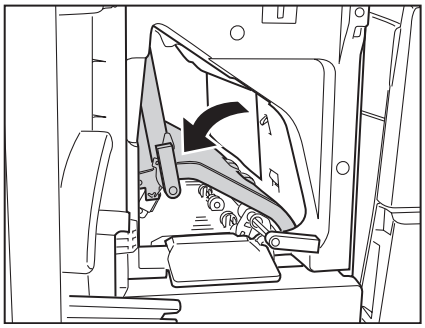

3 **Remove any jammed paper.**

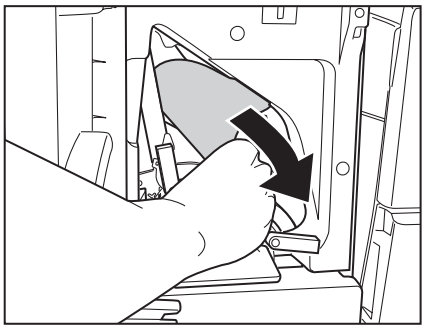

4 **Open the insertion unit.**

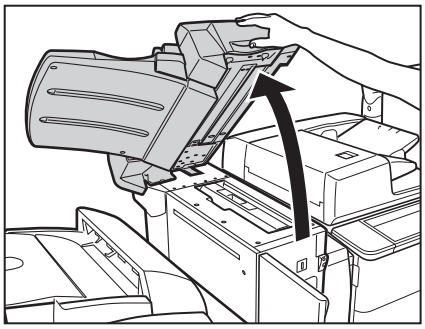

5 Open the delivery unit, and remove the jammed paper.

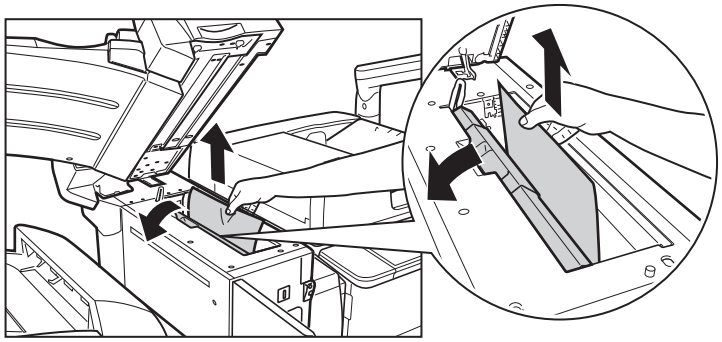

6 Close the delivery unit.

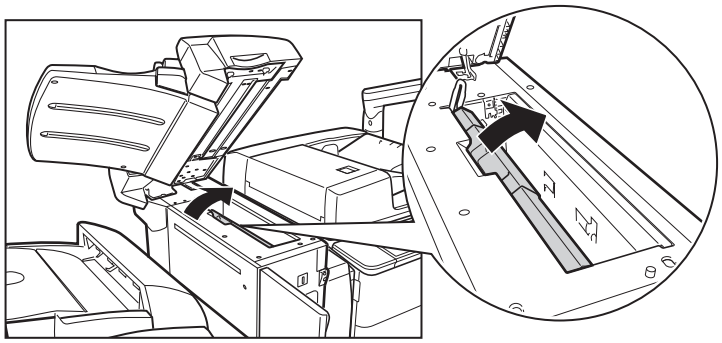

CAUTION

When closing the delivery unit, be careful not to get your fingers caught, as this may result in personal injury.

7 Close the upper delivery guide.

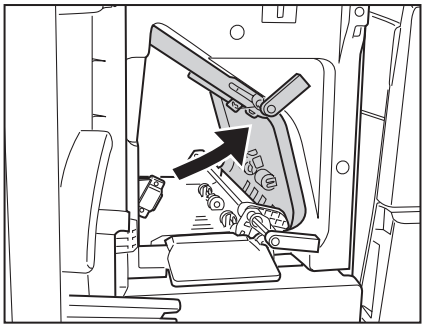

CAUTION

When closing the upper delivery guide, be careful not to get your fingers caught, as this may result in personal injury.

8 Open the lower delivery guide.

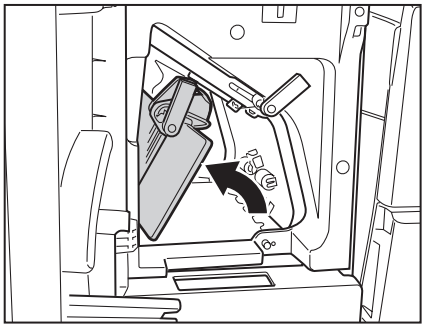

9 Remove any jammed paper.

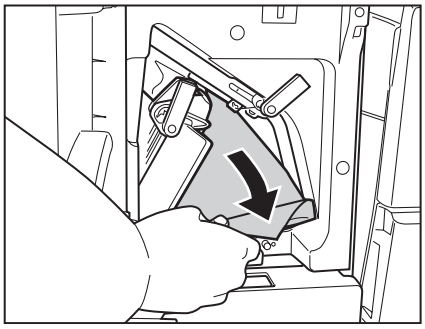

10 Close the lower delivery guide.

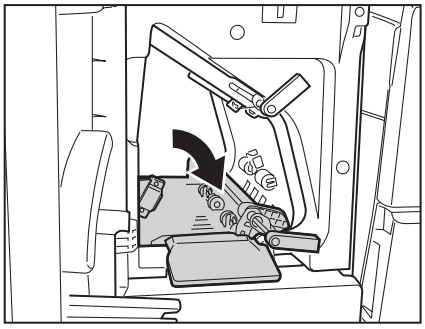

CAUTION

When closing the lower delivery guide, be careful not to get your fingers caught, as this may result in personal injury.

11 **Close the front cover of the document insertion/folding unit/document insertion unit.**

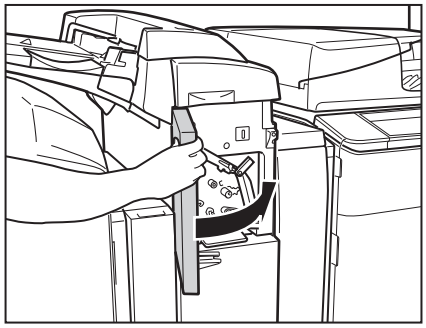

CAUTION

When closing the front cover of the document insertion/folding unit/document insertion unit, be careful not to get your fingers caught, as this may result in personal injury.

12 **Follow the instructions on the touch panel display.**

NOTE

The screen indicating the location of the paper jam repeatedly appears on the touch panel display until the paper jam is entirely cleared. For more information, see "Screens Indicating the Locations of Paper Jams," on p. 2-9.

Document Insertion/Folding Unit-G1 (Optional)

If a paper jam occurs inside the Document Insertion/Folding Unit-G1, a screen prompting you to remove the jammed paper appears on the touch panel display. Check the location of the paper jam, and follow the procedure described below, and the procedure that appears on the touch panel display, to remove the jammed paper.

WARNING

There are some areas inside the machine which are subject to high-voltages. When removing jammed paper or when inspecting the inside of the machine, do not allow necklaces, bracelets, or other metal objects to touch the inside of the machine, as this may result in burns or electrical shock.

CAUTION

- **When removing jammed paper, take care not to cut your hands on the edges of the paper.**
- **When removing paper which has become jammed inside the machine, take care not to cut your hands or injure yourself on the inside of the machine. If you cannot remove the paper, contact your local authorized Canon dealer.**
- **When removing paper which has become jammed inside the machine, take care not to allow the toner on the jammed paper to come into contact with your hands or clothing, as this will dirty your hands or clothing. If they become dirty, wash them immediately with cold water. Washing them with warm water will set the toner, and make it impossible to remove the toner stains.**
- **When removing paper which has become jammed inside the machine, remove the jammed paper gently to prevent the toner on the paper from scattering and getting into your eyes or mouth. If the toner gets into your eyes or mouth, wash them immediately with cold water and immediately consult a physician.**

IMPORTANT

Take care when handling the optional equipment that is attached to the machine. When an optional unit's cover is opened to replace a staple cartridge, discard punch waste, or clear paper or staple jams, prints may still be output if other optional units are operating normally, and are not involved in the paper or staple jam removal procedure.

1 **Open the front cover of the document insertion/folding unit.**

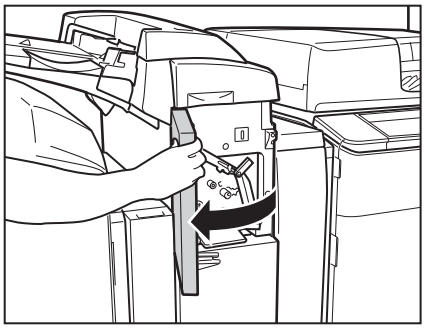

2 **Open the lower delivery guide.**

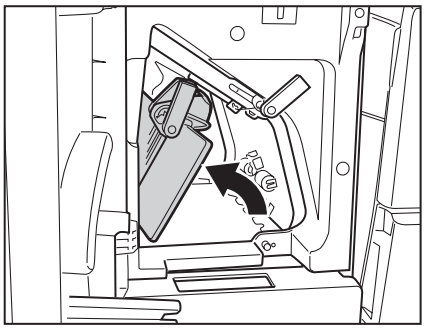

3 **Pull out the document insertion/folding unit.**

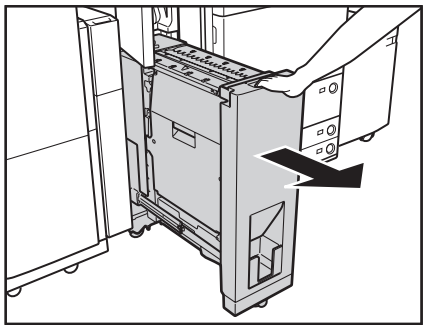

4 **Push out any jammed paper toward the exit slot.**

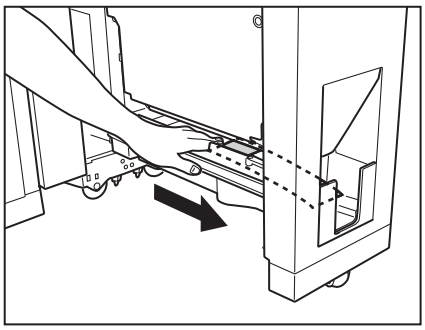

5 Remove the jammed paper.

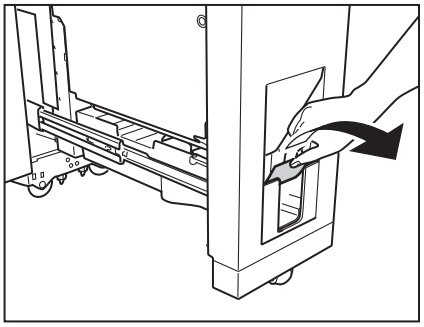

6 Open the left guide.

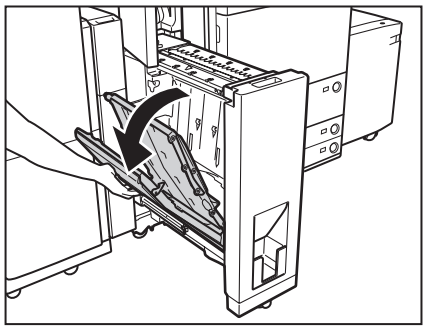

7 Remove any jammed paper.

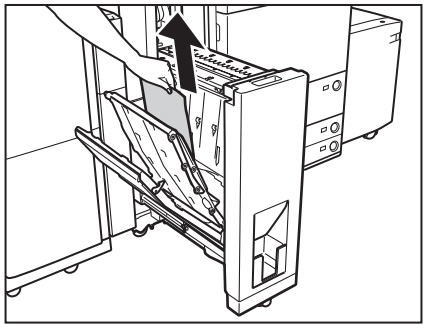

When there is a paper jam in the inside guide.

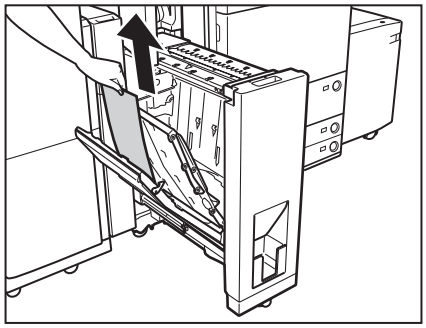

When there is a paper jam in the outside guide.

8 Open the right guide.

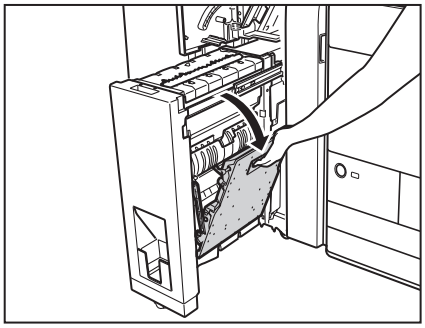

9 Remove any jammed paper.

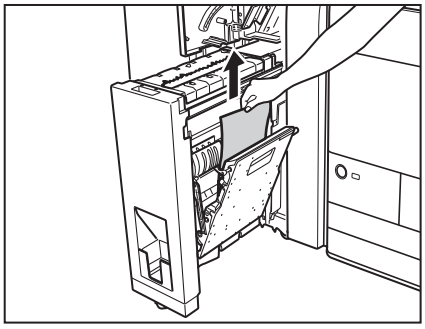

10 Close the right guide.

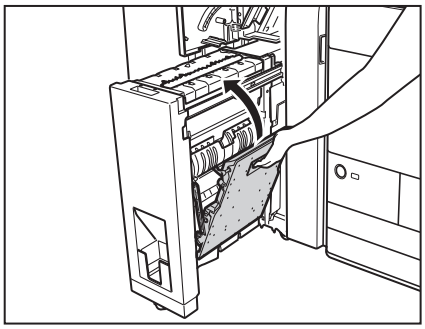

CAUTION

When closing the right guide, be careful not to get your fingers caught, as this may result in personal injury.

11 Close the left guide.

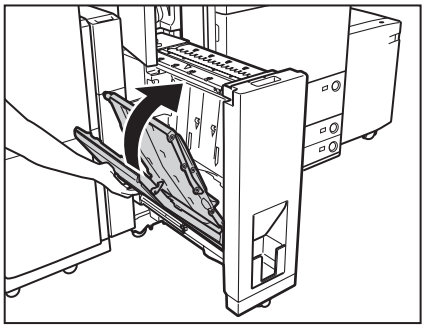

CAUTION

When closing the left guide, be careful not to get your fingers caught, as this may result in personal injury.

12 Return the document insertion/folding unit to its original position.

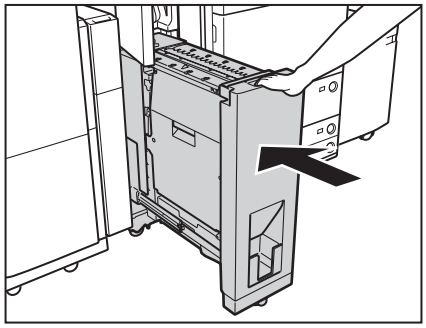

CAUTION

When returning the document insertion/folding unit to its original position, be careful not to get your fingers caught, as this may result in personal injury.

13 Close the lower delivery guide.

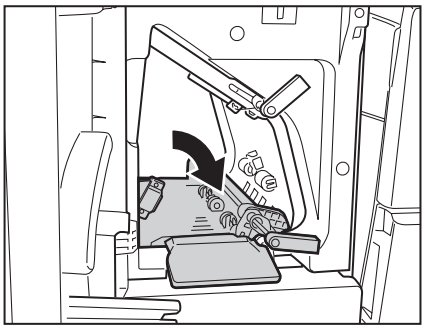

CAUTION

When closing the lower delivery guide, be careful not to get your fingers caught, as this may result in personal injury.

14 Close the front cover of the document insertion/folding unit.

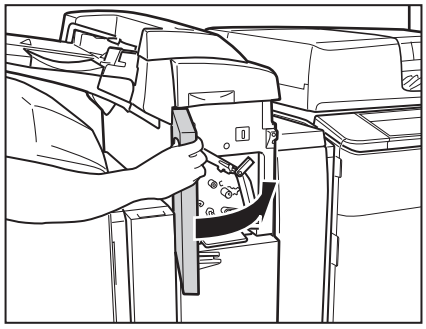

CAUTION

When closing the front cover of the document insertion/folding unit, be careful not to get your fingers caught, as this may result in personal injury.

15 Follow the instructions on the touch panel display.

NOTE

The screen indicating the location of the paper jam repeatedly appears on the touch panel display until the paper jam is entirely cleared. For more information, see "Screens Indicating the Locations of Paper Jams," on p. 2-9.

Paper Folding Unit-G1 (Optional)

If a paper jam occurs inside the Paper Folding Unit-G1, a screen prompting you to remove the jammed paper on the touch panel display. Check the location of the paper jam, and follow the procedure described below, and the procedure that appears on the touch panel display, to remove the jammed paper.

CAUTION

- **When removing jammed paper, take care not to cut your hands on the edges of the paper.**
- **When removing paper which has become jammed inside the machine, take care not to cut your hands or injure yourself on the inside of the machine. If you cannot remove the paper, contact your local authorized Canon dealer.**
- **Take care when handling the optional equipment that is attached to the machine. When an optional unit's cover is opened to replace a staple cartridge, discard punch waste, or clear paper or staple jams, prints may still be output if other optional units are operating normally, and are not involved in the paper or staple jam removal procedure.**

1 **Open the front cover of the paper folding unit.**

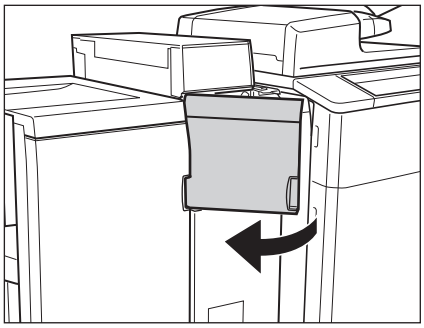

2 **Open the guide (M-A2).**

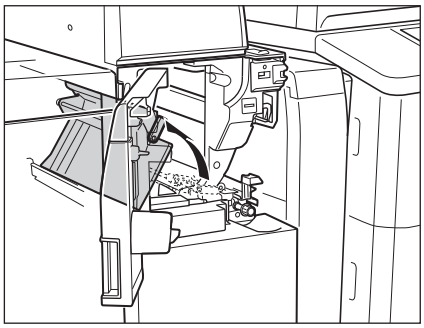

3 **Turn the dial (M-A3) in the direction of the arrow (counterclockwise).**

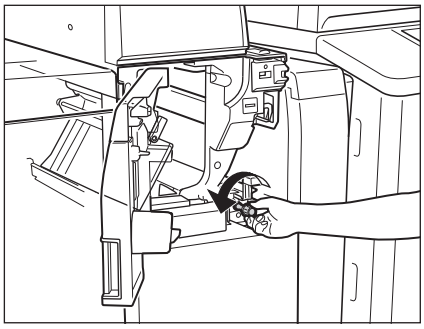

4 **Remove any jammed paper.**

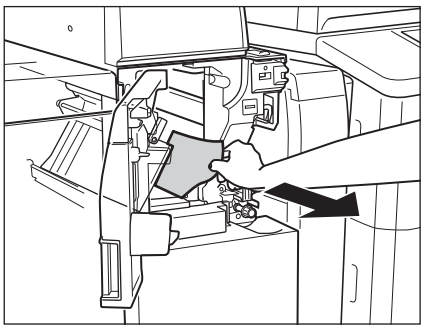

5 **Pull out the paper folding unit (M-B1).**

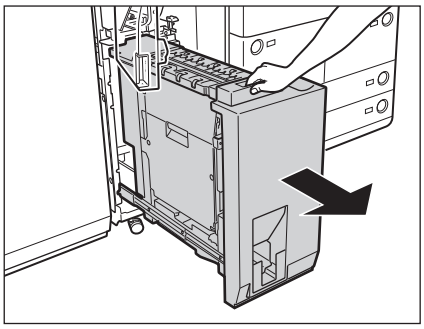

6 **Open the left guide (M-B2).**

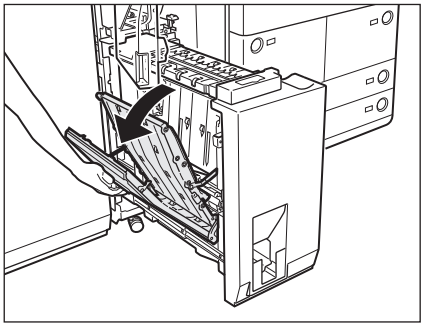

7 Remove any jammed paper.

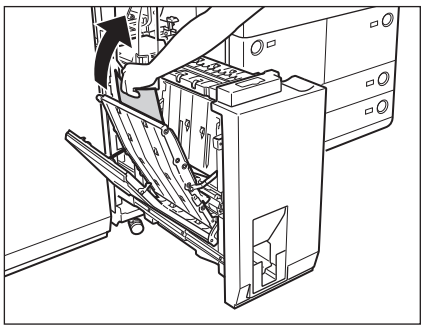

When there is a paper jam in the inside guide.

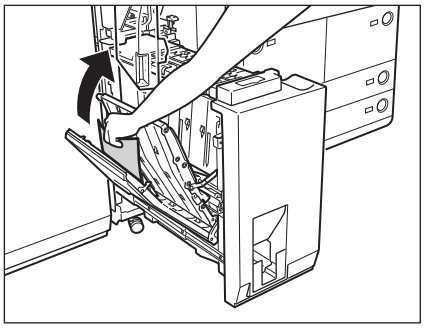

When there is a paper jam in the outside guide.

8 Close the left guide (M-B2).

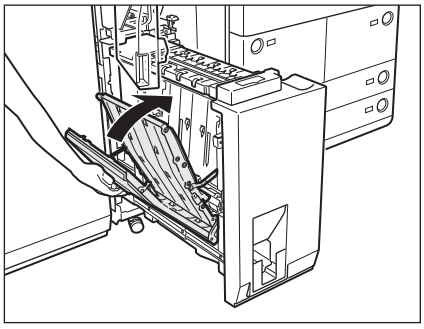

CAUTION

When closing the left guide, be careful not to get your fingers caught, as this may result in personal injury.

9 Open the right guide (M-B3).

Open the guide as far as it can go.

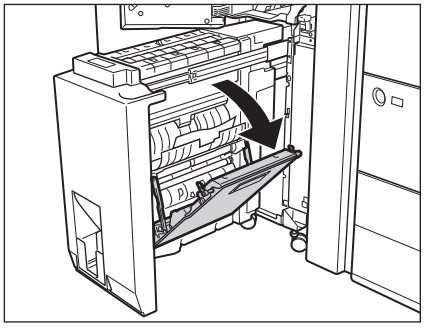

10 Remove any jammed paper.

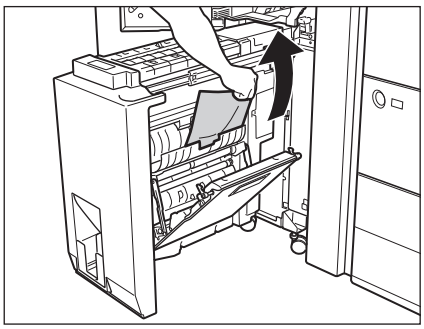

When there is a paper jam in the inside guide.

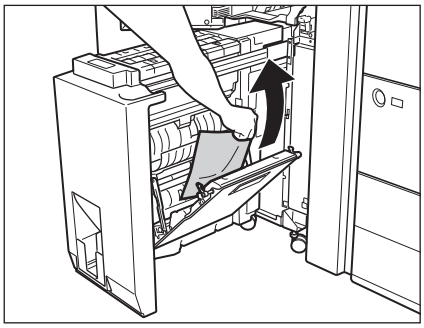

When there is a paper jam in the outside guide.

11 Close the right guide (M-B3).

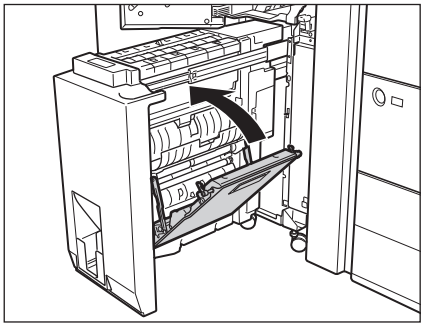

CAUTION

When closing the right guide, be careful not to get your fingers caught, as this may result in personal injury.

12 Push out any jammed paper toward the exit slot.

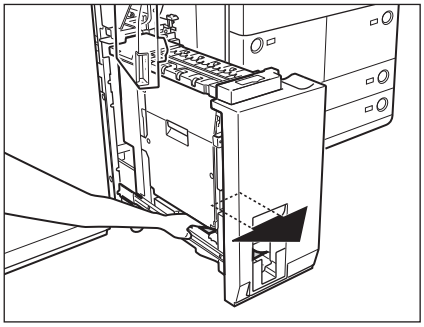

13 Remove the jammed paper.

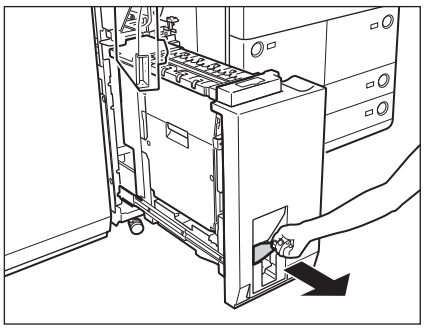

14 Return the paper folding unit (M-B1) to its original position.

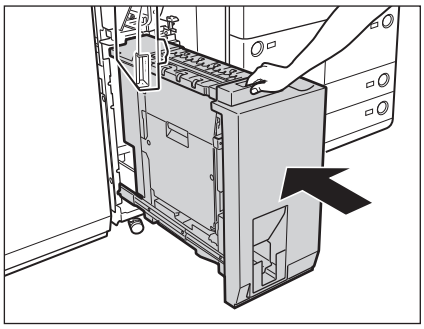

CAUTION

When returning the paper folding unit to its original position, be careful not to get your fingers caught, as this may result in personal injury.

15 Close the guide (M-A2).

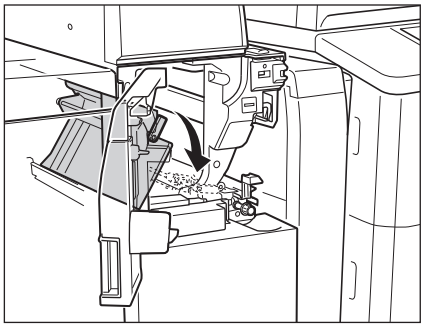

CAUTION

When closing the guide, be careful not to get your fingers caught, as this may result in personal injury.

16 Close the front cover of the paper folding unit.

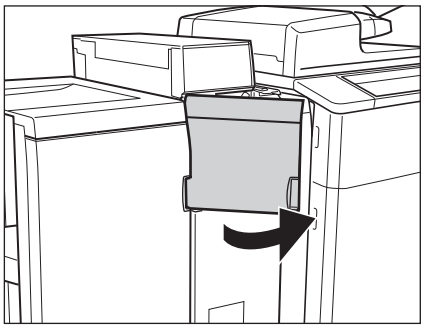

CAUTION

When closing the front cover of the paper folding unit, be careful not to get your fingers caught, as this may result in personal injury.

NOTE

If the paper jam message is displayed even after the paper jam is cleared, check whether there is any paper left by opening the entrance guide.

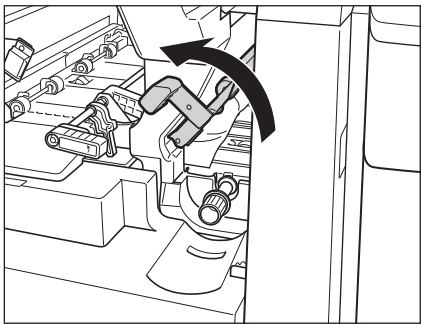

17 **Follow the instructions on the touch panel display.**

NOTE

The screen indicating the location of the paper jam repeatedly appears on the touch panel display until the paper jam is entirely cleared. For more information, see "Screens Indicating the Locations of Paper Jams," on p. 2-9.

Inside of the Staple Finisher-A1/Booklet Finisher-A1 (Optional)

If a paper jam occurs inside of the Staple Finisher-A1 or Booklet Finisher-A1, a screen prompting you to remove the jammed paper appears on the touch panel display. Check the location of the paper jam, and follow the procedure described below, and the procedure that appears on the touch panel display, to remove the jammed paper.

WARNING

There are some areas inside the machine which are subject to high-voltages. When removing jammed paper or when inspecting the inside of the machine, do not allow necklaces, bracelets, or other metal objects to touch the inside of the machine, as this may result in burns or electrical shock.

CAUTION

- **When removing jammed paper, take care not to cut your hands on the edges of the paper.**
- **When removing paper which has become jammed inside the machine, take care not to cut your hands or injure yourself on the inside of the machine. If you cannot remove the paper, contact your local authorized Canon dealer.**
- **When removing paper which has become jammed inside the machine, take care not to allow the toner on the jammed paper to come into contact with your hands or clothing, as this will dirty your hands or clothing. If they become dirty, wash them immediately with cold water. Washing them with warm water will set the toner, and make it impossible to remove the toner stains.**
- **When removing paper which has become jammed inside the machine, remove the jammed paper gently to prevent the toner on the paper from scattering and getting into your eyes or mouth. If the toner gets into your eyes or mouth, wash them immediately with cold water and immediately consult a physician.**

IMPORTANT

Take care when handling the optional equipment that is attached to the machine. When an optional unit's cover is opened to replace a staple cartridge, discard the punch waste, discard the trim waste, or clear paper or staple jams, prints may still be output if other optional units are operating normally, and are not involved in the paper or staple jam removal procedure.

1 Open the front cover of the finisher.

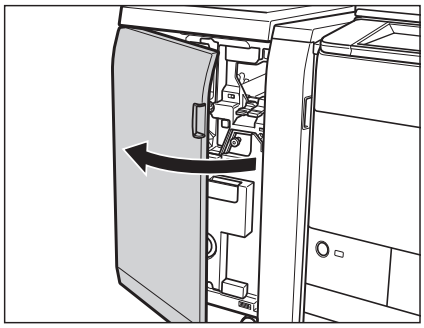

2 Slide the guide (F-A1) to align it with the mark.

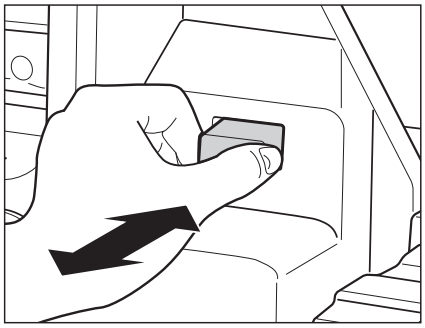

If the Booklet Finisher-A1 is attached

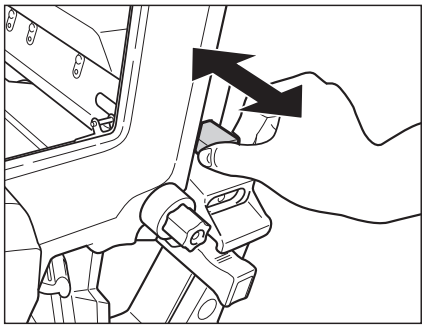

If the Staple Finisher-A1 is attached

This procedure is necessary only if the Puncher Unit-BG1/BH1 is attached.

3 Open the guide (F-B1) .

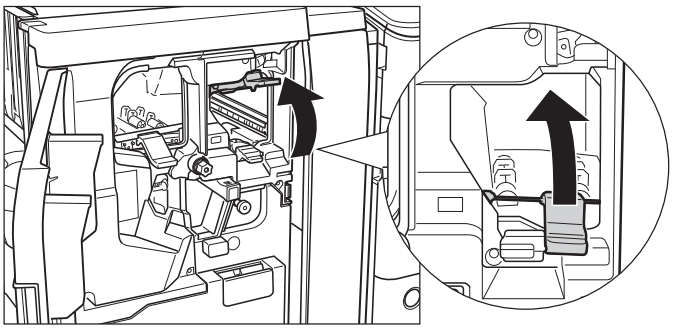

If you are using the Staple Finisher-A1, open the entrance guide.

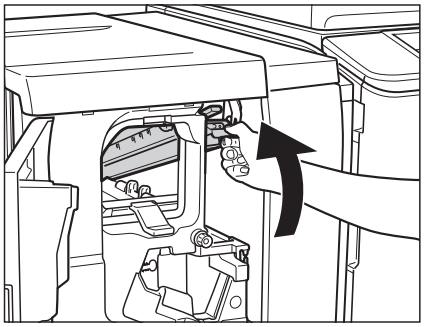

4 Remove any jammed paper.

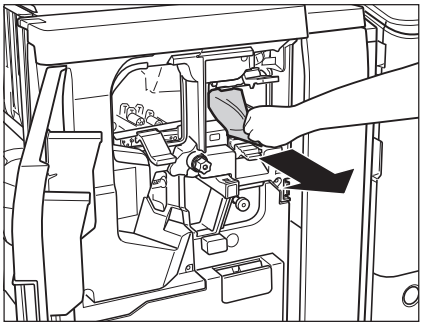

5 Close the guide (F-B1) .

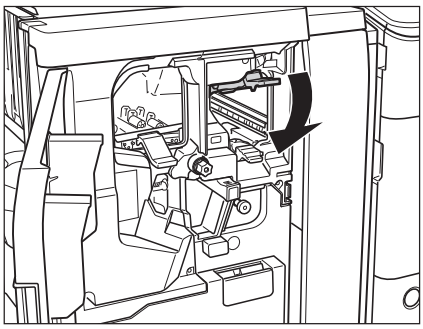

If you are using the Staple Finisher-A1, close the entrance guide.

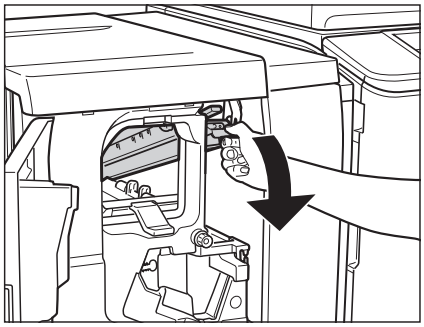

CAUTION

When closing the guide, be careful not to get your fingers caught, as this may result in personal injury.

6 Open the guide (F-B2).

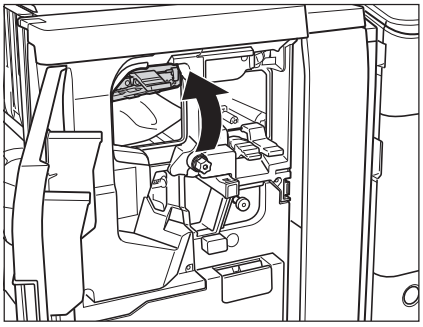

If you are using the Staple Finisher-A1, open the guide (F-B1).

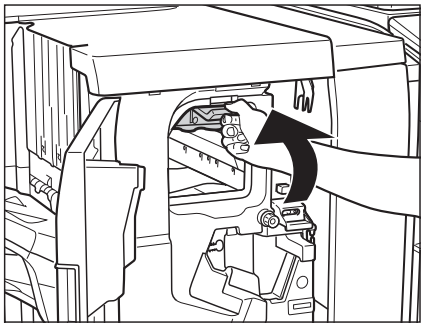

7 Remove any jammed paper.

8 Close the guide (F-B2) .

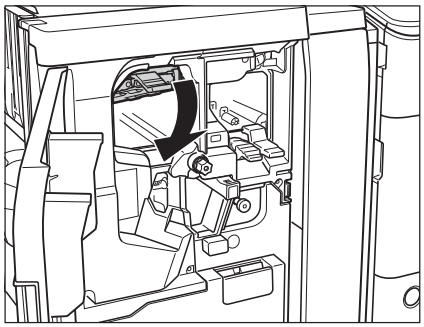

If you are using the Staple Finisher-A1, close the guide (F-B1).

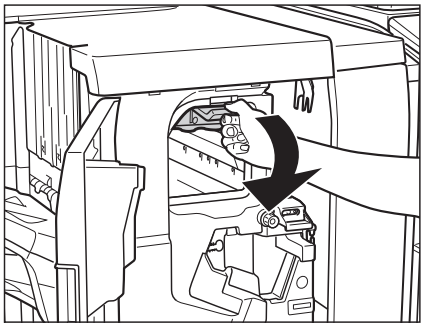

CAUTION

When closing the guide, be careful not to get your fingers caught, as this may result in personal injury.

9 Turn the lower dial (F-B3) in the direction of the arrow (counterclockwise).

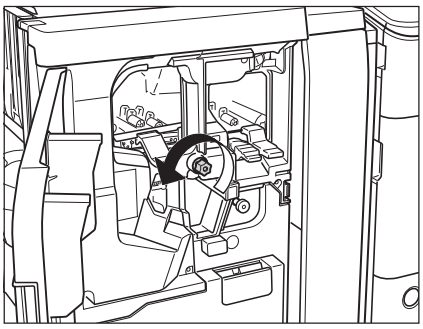

If you are using the Staple Finisher-A1, turn the dial (F-B2).

10 Open the guide (F-B4), and remove any jammed paper.

If you are using the Staple Finisher-A1, open the guide (F-B3), and remove any jammed paper.

11 Close the guide (F-B4) .

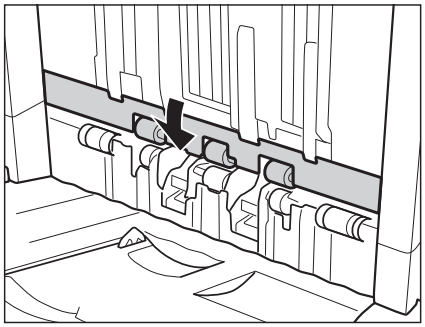

If you are using the Staple Finisher-A1, close the guide (F-B3).

CAUTION

When closing the guide, be careful not to get your fingers caught, as this may result in personal injury.

12 Close the front cover of the finisher.

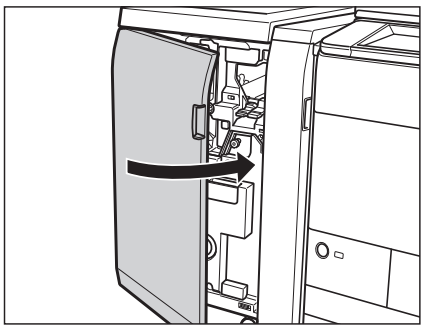

CAUTION

When closing the front cover of the finisher, be careful not to get your fingers caught, as this may result in personal injury.

13 Follow the instructions on the touch panel display.

NOTE

The screen indicating the location of the paper jam is displayed on the touch panel display until the paper jam is entirely cleared. For more information, see "Screens Indicating the Locations of Paper Jams," on p. 2-9.

Saddle Stitcher Unit of the Booklet Finisher-A1 (Optional)

If a paper jam occurs inside the saddle stitcher unit of the Booklet Finisher-A1, a screen prompting you to remove the jammed paper appears on the touch panel display. Check the location of the paper jam, and follow the procedure described below, and the procedure that appears on the touch panel display, to remove the jammed paper.

WARNING

There are some areas inside the machine which are subject to high-voltages. When removing jammed paper or when inspecting the inside of the machine, do not allow necklaces, bracelets, or other metal objects to touch the inside of the machine, as this may result in burns or electrical shock.

CAUTION

- **When removing jammed paper, take care not to cut your hands on the edges of the paper.**
- **When removing paper which has become jammed inside the machine, take care not to cut your hands or injure yourself on the inside of the machine. If you cannot remove the paper, contact your local authorized Canon dealer.**
- **When removing paper which has become jammed inside the machine, take care not to allow the toner on the jammed paper to come into contact with your hands or clothing, as this will dirty your hands or clothing. If they become dirty, wash them immediately with cold water. Washing them with warm water will set the toner, and make it impossible to remove the toner stains.**
- **When removing paper which has become jammed inside the machine, remove the jammed paper gently to prevent the toner on the paper from scattering and getting into your eyes or mouth. If the toner gets into your eyes or mouth, wash them immediately with cold water and immediately consult a physician.**

IMPORTANT

Take care when handling the optional equipment that is attached to the machine. When an optional unit's cover is opened to replace a staple cartridge, discard the punch waste, discard the trim waste, or clear paper or staple jams, prints may still be output if other optional units are operating normally, and are not involved in the paper or staple jam removal procedure.

1 **Open the front cover of the finisher.**

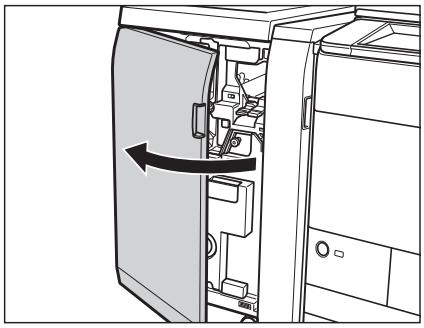

2 **Open the guide (F-C1).**

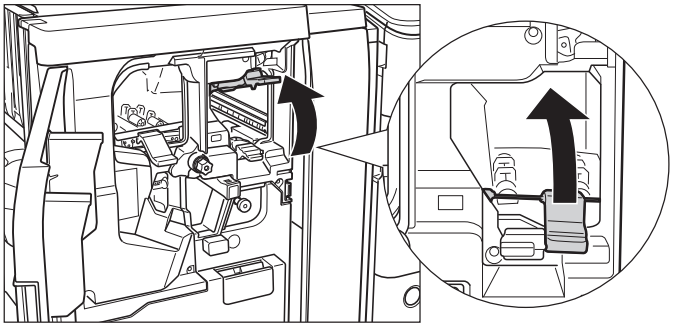

3 **Open the guide (F-C2).**

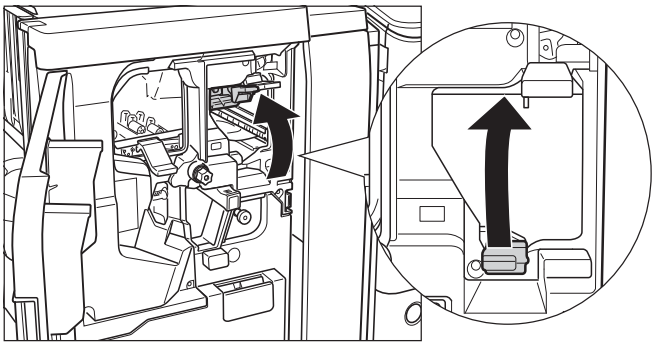

4 **Turn the lower dial (F-C3) in the direction of the arrow (counterclockwise), to feed the jammed paper to the guide (F-C2).**

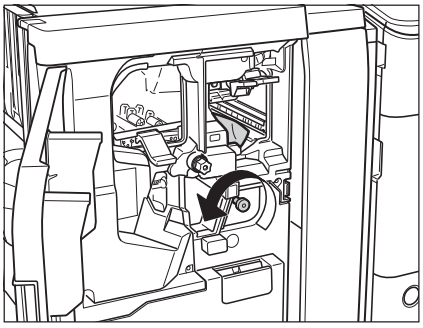

5 Remove any jammed paper.

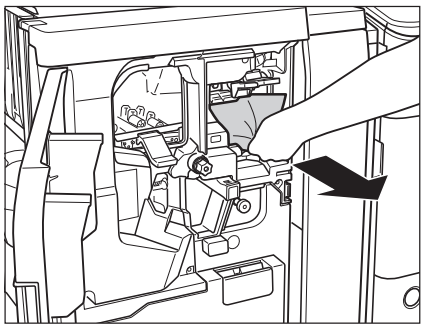

6 Close the guide (F-C2).

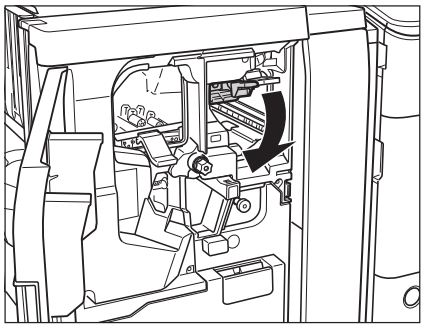

CAUTION

When closing the guide, be careful not to get your fingers caught, as this may result in personal injury.

7 Close the guide (F-C1).

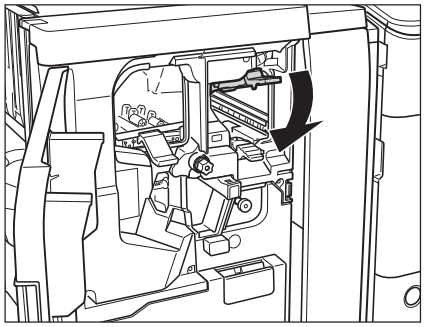

CAUTION

When closing the guide, be careful not to get your fingers caught, as this may result in personal injury.

8 If the lamp is ON, while pushing in the dial (F-C4), turn it in the direction of the arrow (counterclockwise) until the lamp turns off.

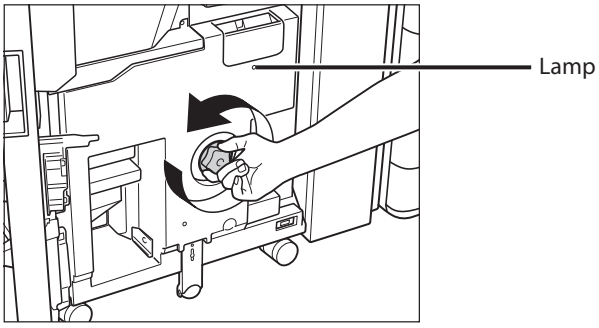

If the lamp is OFF, proceed to step 9.

9 Remove any jammed paper from the booklet tray.

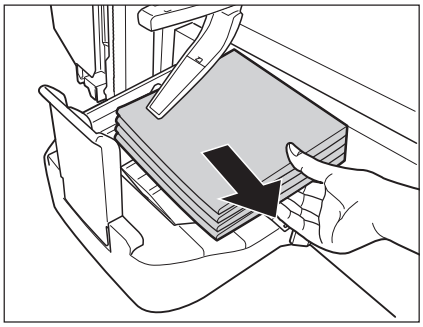

10 Pull out the saddle stitcher unit (F-C5).

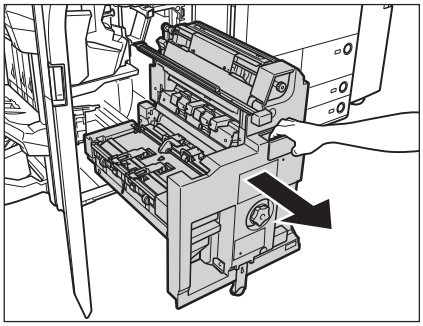

11 Open the right cover of the saddle stitcher unit (F-C6).

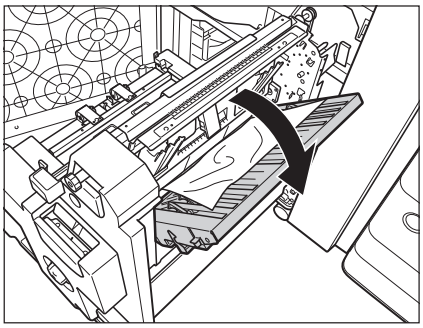

12 Remove any jammed paper.

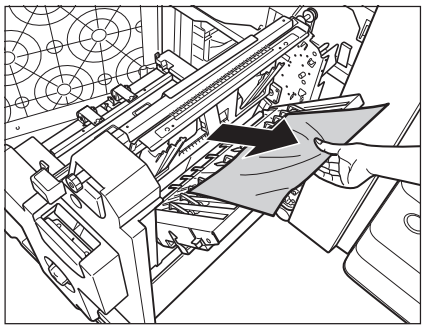

13 Close the right cover of the saddle stitcher unit (F-C6).

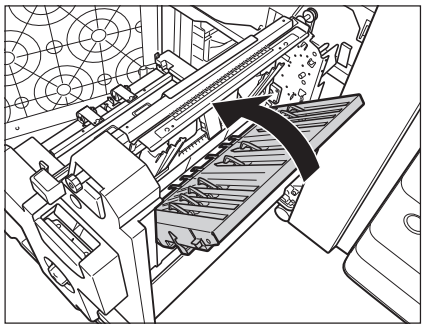

CAUTION

When closing the right cover of the saddle stitcher unit, be careful not to get your fingers caught, as this may result in personal injury.

- **If parts of the paper are left on top of the feeding belt, open the guide, and remove any parts of the paper left:**

☐ Open the delivery guide.

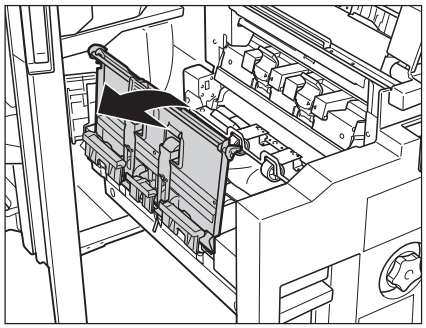

☐ Remove any jammed paper.

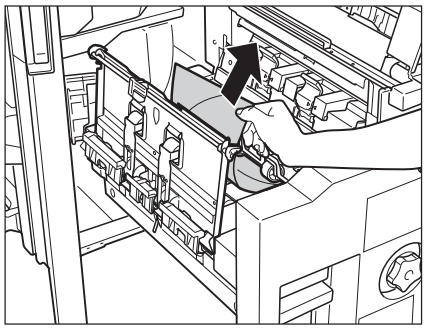

☐ Close the delivery guide.

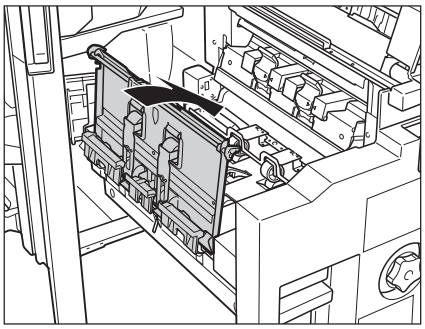

CAUTION

When closing the delivery guide, be careful not to get your fingers caught, as this may result in personal injury.

IMPORTANT

This procedure is only required if the Inner Booklet Trimmer-A1 is not attached.

14 Gently push the saddle stitcher unit (F-C5) back into the machine.

Always make sure to push the saddle stitcher unit in as far as it can go.

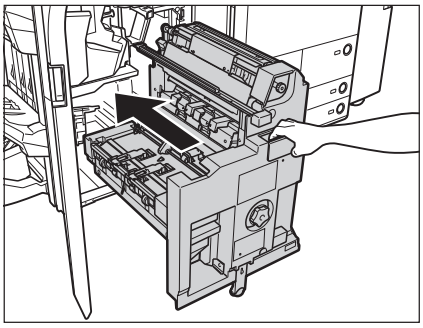

CAUTION

When returning the saddle stitcher unit to its original position, be careful not to get your fingers caught, as this may result in personal injury.

15 Close the front cover of the finisher.

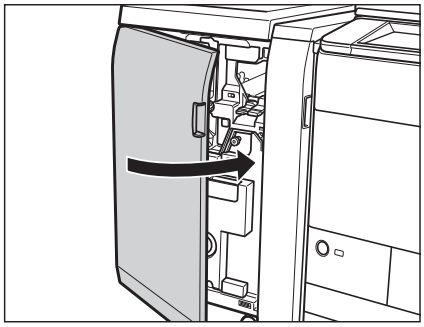

CAUTION

When closing the front cover of the finisher, be careful not to get your fingers caught, as this may result in personal injury.

16 Follow the instructions on the touch panel display.

NOTE

The screen indicating the location of the paper jam repeatedly appears on the touch panel display until the paper jam is entirely cleared. For more information, see "Screens Indicating the Locations of Paper Jams," on p. 2-9.

Inside the Top Cover of the Staple Finisher-B1/Booklet Finisher-B1 (Optional)

If a paper jam occurs inside the top cover of the Staple Finisher-B1 or Booklet Finisher-B1, a screen prompting you to remove the jammed paper appears on the touch panel display. Check the location of the paper jam, and follow the procedure described below, and the procedure that appears on the touch panel display, to remove the jammed paper.

WARNING

There are some areas inside the machine which are subject to high-voltages. When removing jammed paper or when inspecting the inside of the machine, do not allow necklaces, bracelets, or other metal objects to touch the inside of the machine, as this may result in burns or electrical shock.

CAUTION

- **When removing jammed paper, take care not to cut your hands on the edges of the paper.**
- **When removing paper which has become jammed inside the machine, take care not to cut your hands or injure yourself on the inside of the machine. If you cannot remove the paper, contact your local authorized Canon dealer.**
- **When removing paper which has become jammed inside the machine, take care not to allow the toner on the jammed paper to come into contact with your hands or clothing, as this will dirty your hands or clothing. If they become dirty, wash them immediately with cold water. Washing them with warm water will set the toner, and make it impossible to remove the toner stains.**
- **When removing paper which has become jammed inside the machine, remove the jammed paper gently to prevent the toner on the paper from scattering and getting into your eyes or mouth. If the toner gets into your eyes or mouth, wash them immediately with cold water and immediately consult a physician.**

1 Open the front cover of the finisher.

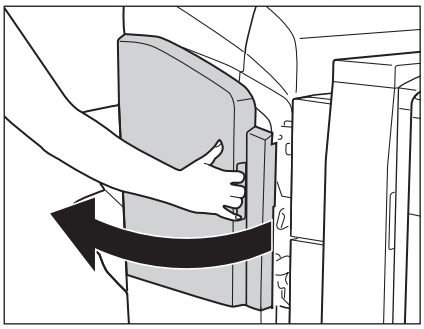

Staple Finisher-B1

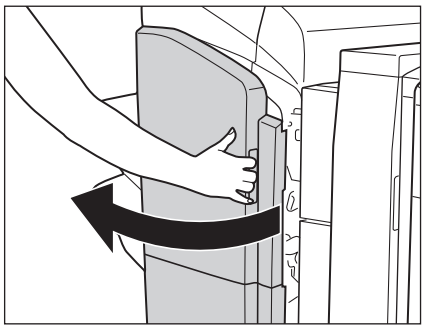

Booklet Finisher-B1

If the Document Insertion/Folding Unit-G1/Document Insertion Unit-J1 is attached, open the insertion unit. See e-Manual > Optional Products (imageRUNNER ADVANCE C7065/C7055).

2 Open the top cover of the finisher.

3 Remove any jammed paper.

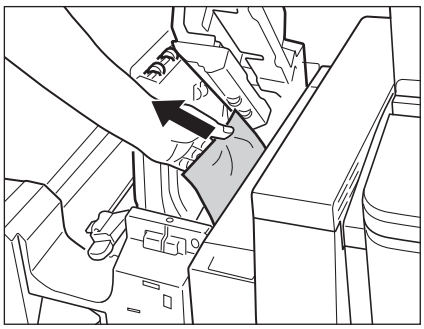

4 Close the top cover of the finisher.

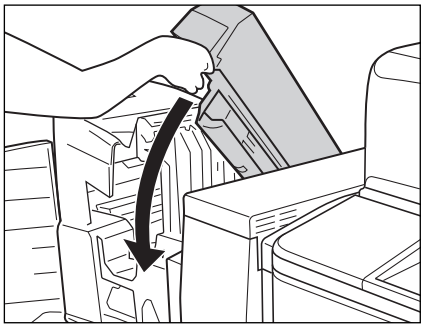

If you opened the insertion unit in step 1, gently push down the insertion unit back into its original position.

CAUTION

When closing the top cover of the finisher, be careful not to get your fingers caught, as this may result in personal injury.

5 Close the front cover of the finisher.

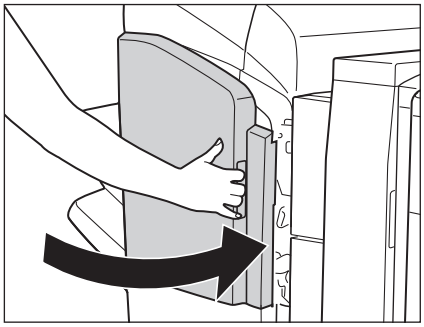

Staple Finisher-B1

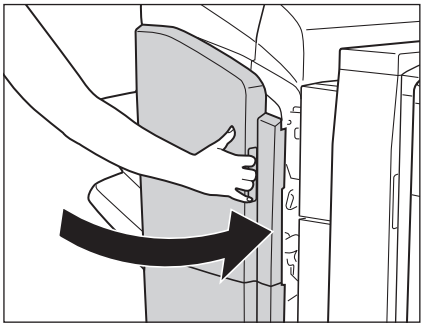

Booklet Finisher-B1

CAUTION

When closing the front cover of the finisher, be careful not to get your fingers caught, as this may result in personal injury.

6 Follow the instructions on the touch panel display.

NOTE

The screen indicating the location of the paper jam repeatedly appears on the touch panel display until the paper jam is entirely cleared. For more information, see "Screens Indicating the Locations of Paper Jams," on p. 2-9.

Output Area of the Staple Finisher-B1/Booklet Finisher-B1 (Optional)

If a paper jam occurs in the output delivery unit of the Staple Finisher-B1 or Booklet Finisher-B1, a screen prompting you to remove the jammed paper appears on the touch panel display. Check the location of the paper jam, and follow the procedure described below, and the procedure that appears on the touch panel display, to remove the jammed paper.

WARNING

There are some areas inside the machine which are subject to high-voltages. When removing jammed paper or when inspecting the inside of the machine, do not allow necklaces, bracelets, or other metal objects to touch the inside of the machine, as this may result in burns or electrical shock.

CAUTION

- **When removing jammed paper, take care not to cut your hands on the edges of the paper.**
- **When removing paper which has become jammed inside the machine, take care not to cut your hands or injure yourself on the inside of the machine. If you cannot remove the paper, contact your local authorized Canon dealer.**
- **When removing paper which has become jammed inside the machine, take care not to allow the toner on the jammed paper to come into contact with your hands or clothing, as this will dirty your hands or clothing. If they become dirty, wash them immediately with cold water. Washing them with warm water will set the toner, and make it impossible to remove the toner stains.**
- **When removing paper which has become jammed inside the machine, remove the jammed paper gently to prevent the toner on the paper from scattering and getting into your eyes or mouth. If the toner gets into your eyes or mouth, wash them immediately with cold water and immediately consult a physician.**

1 Open the output slot on the outside of the finisher, and remove any jammed paper that is visible.

If you cannot see any jammed paper, check if any jammed paper is stuck inside the output area of the finisher.

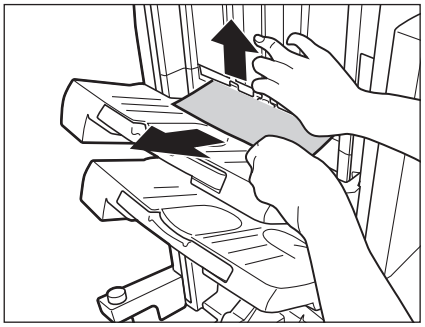

IMPORTANT

If a paper jam occurs when you are printing in the Staple mode, do not remove the output sheets that are waiting to be stapled. (Printing and stapling resume after you clear the paper jam.)

2 Open the front cover of the finisher.

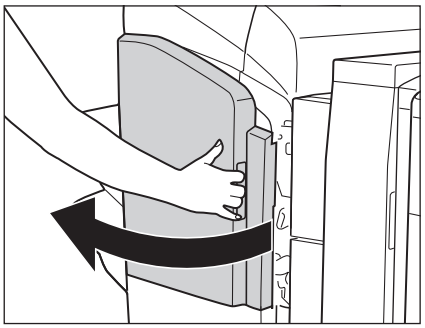

Staple Finisher-B1

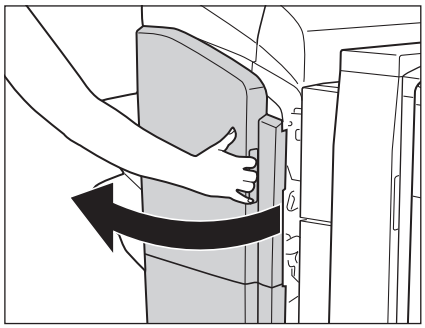

Booklet Finisher-B1

If the Document Insertion/Folding Unit-G1/Document Insertion Unit-J1 is attached, open the insertion unit. See e-Manual > Optional Products (imageRUNNER ADVANCE C7065/C7055).

3 Open the top cover of the finisher.

4 Open the delivery guide.

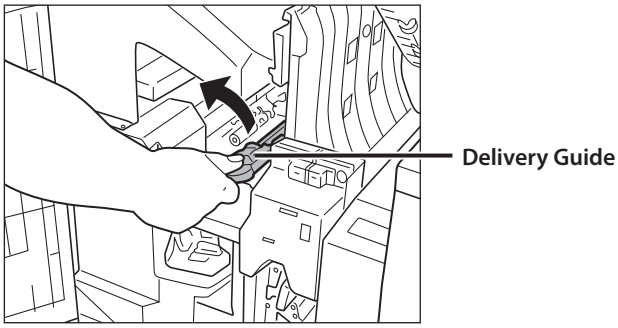

5 Remove any jammed paper.

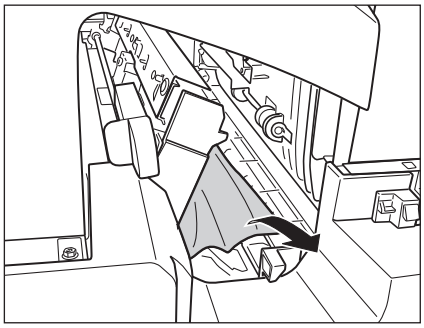

6 Close the delivery guide.

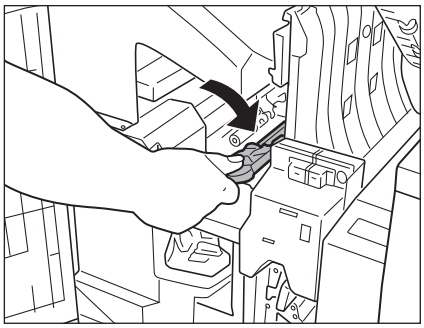

CAUTION

When closing the delivery guide, be careful not to get your fingers caught, as this may result in personal injury.

7 Close the top cover of the finisher.

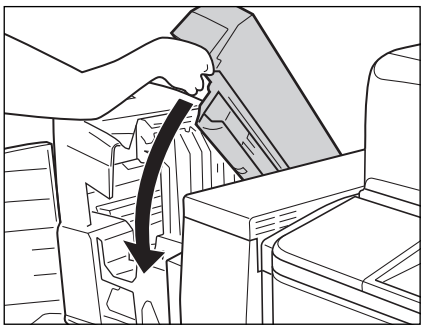

If you opened the insertion unit in step 2, gently push down the insertion unit back into its original position.

CAUTION

When closing the top cover of the finisher, be careful not to get your fingers caught, as this may result in personal injury.

8 Close the front cover of the finisher.

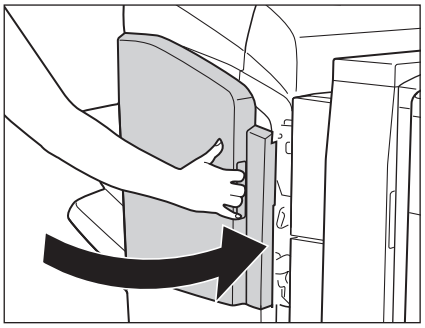

Staple Finisher-B1

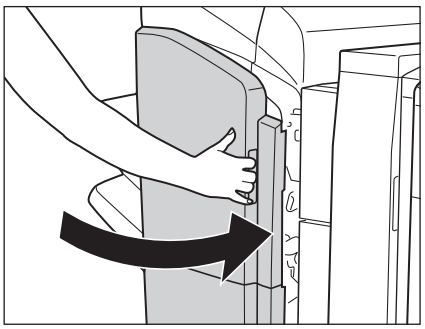

Booklet Finisher-B1

CAUTION

When closing the front cover of the finisher, be careful not to get your fingers caught, as this may result in personal injury.

9 Follow the instructions on the touch panel display.

NOTE

The screen indicating the location of the paper jam repeatedly appears on the touch panel display until the paper jam is entirely cleared. For more information, see "Screens Indicating the Locations of Paper Jams," on p. 2-9.

Front Cover of the Booklet Finisher-B1 (Optional)

If a paper jam occurs inside the front cover of the Booklet Finisher-B1, a screen prompting you to remove the jammed paper appears on the touch panel display. Check the location of the paper jam, and follow the procedure described below, and the procedure that appears on the touch panel display, to remove the jammed paper.

WARNING

There are some areas inside the machine which are subject to high-voltages. When removing jammed paper or when inspecting the inside of the machine, do not allow necklaces, bracelets, or other metal objects to touch the inside of the machine, as this may result in burns or electrical shock.

CAUTION

- **When removing jammed paper, take care not to cut your hands on the edges of the paper.**
- **When removing paper which has become jammed inside the machine, take care not to cut your hands or injure yourself on the inside of the machine. If you cannot remove the paper, contact your local authorized Canon dealer.**
- **When removing paper which has become jammed inside the machine, take care not to allow the toner on the jammed paper to come into contact with your hands or clothing, as this will dirty your hands or clothing. If they become dirty, wash them immediately with cold water. Washing them with warm water will set the toner, and make it impossible to remove the toner stains.**
- **When removing paper which has become jammed inside the machine, remove the jammed paper gently to prevent the toner on the paper from scattering and getting into your eyes or mouth. If the toner gets into your eyes or mouth, wash them immediately with cold water and immediately consult a physician.**

1 **Open the front cover of the finisher.**

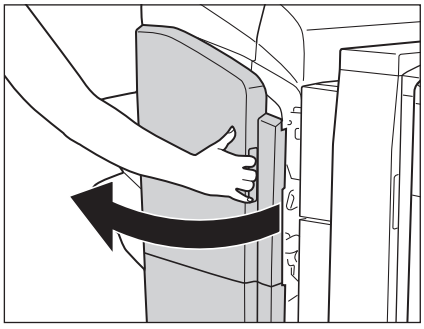

If Document Insertion/Folding Unit-G1/Document Insertion Unit-J1 is attached, open the insertion unit. See e-Manual > Optional Products (imageRUNNER ADVANCE C7065/C7055).

2 **Open the top cover of the finisher.**

3 Tilt the upper delivery guide to the right, and remove any jammed paper.

Springs are attached to the upper delivery guide, so it returns to its original position when released.

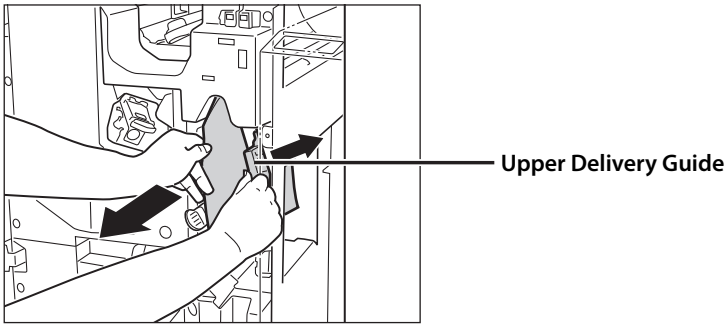

CAUTION

When releasing the upper delivery guide, be careful not to get your fingers caught, as this may result in personal injury.

4 Tilt the lower delivery guide to the right, and remove any jammed paper.

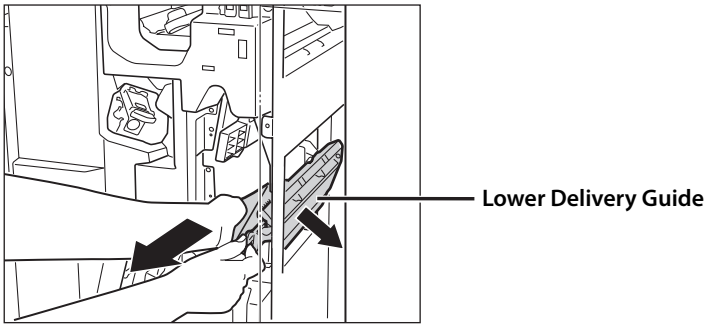

5 Return the lower delivery guide to its original position.

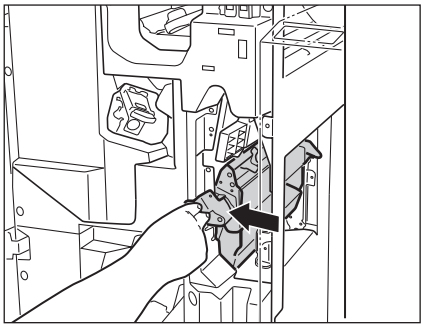

CAUTION

When returning the lower delivery guide to its original position, be careful not to get your fingers caught, as this may result in personal injury.

6 Close the top cover of the finisher.

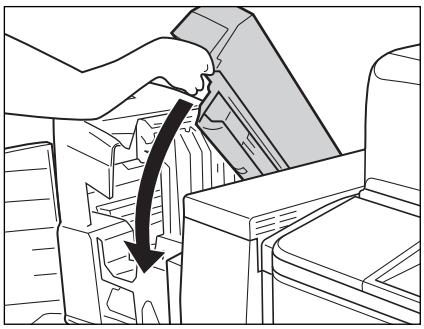

If you opened the insertion unit in step 1, gently push down the insertion unit back into its original position.

CAUTION

When closing the top cover of the finisher, be careful not to get your fingers caught, as this may result in personal injury.

7 Close the front cover of the finisher.

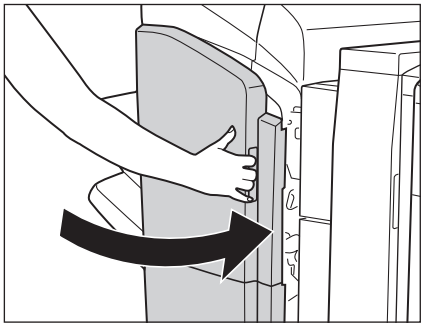

CAUTION

When closing the front cover of the finisher, be careful not to get your fingers caught, as this may result in personal injury.

8 Follow the instructions on the touch panel display.

NOTE

The screen indicating the location of the paper jam repeatedly appears on the touch panel display until the paper jam is entirely cleared. For more information, see "Screens Indicating the Locations of Paper Jams," on p. 2-9.

Saddle Stitcher Unit of the Booklet Finisher-B1 (Optional)

If a paper jam occurs inside the saddle stitcher unit of the Booklet Finisher-B1, a screen prompting you to remove the jammed paper appears on the touch panel display. Check the location of the paper jam, and follow the procedure described below, and the procedure that appears on the touch panel display, to remove the jammed paper.

WARNING

There are some areas inside the machine which are subject to high-voltages. When removing jammed paper or when inspecting the inside of the machine, do not allow necklaces, bracelets, or other metal objects to touch the inside of the machine, as this may result in burns or electrical shock.

CAUTION

- **When removing jammed paper, take care not to cut your hands on the edges of the paper.**
- **When removing paper which has become jammed inside the machine, take care not to cut your hands or injure yourself on the inside of the machine. If you cannot remove the paper, contact your local authorized Canon dealer.**
- **When removing paper which has become jammed inside the machine, take care not to allow the toner on the jammed paper to come into contact with your hands or clothing, as this will dirty your hands or clothing. If they become dirty, wash them immediately with cold water. Washing them with warm water will set the toner, and make it impossible to remove the toner stains.**
- **When removing paper which has become jammed inside the machine, remove the jammed paper gently to prevent the toner on the paper from scattering and getting into your eyes or mouth. If the toner gets into your eyes or mouth, wash them immediately with cold water and immediately consult a physician.**

1 **Open the front cover of the finisher.**

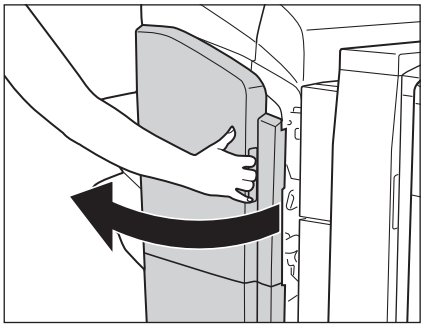

2 **Turn the small knob on the right in the direction of the arrow (counterclockwise).**

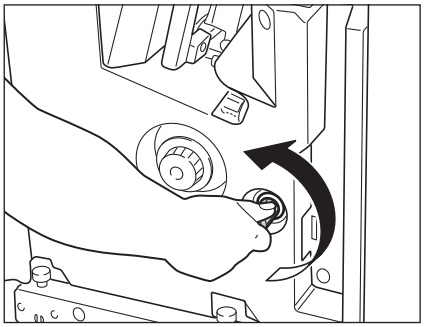

3 **While pushing in the larger knob on the left, turn it in the direction of the arrow (clockwise).**

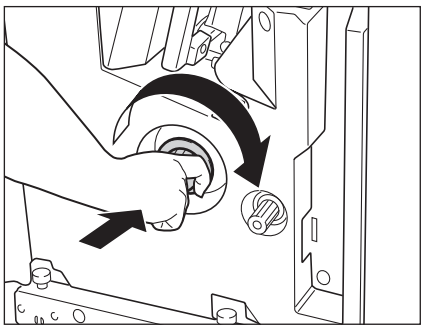

4 **Remove any jammed paper protruding from the saddle stitcher unit.**

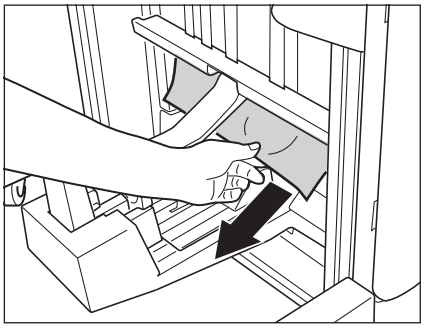

5 **Tilt the lower delivery guide to the right, and remove any jammed paper.**

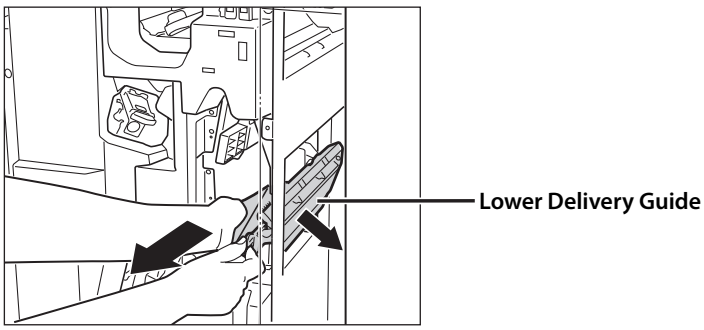

6 **Return the lower delivery guide to its original position.**

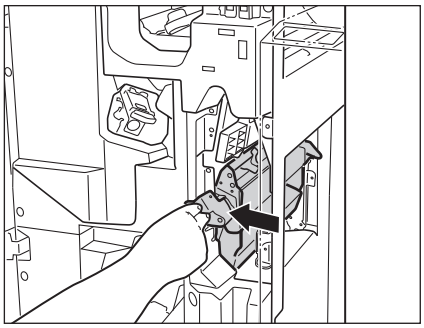

CAUTION

When returning the lower delivery guide to its original position, be careful not to get your fingers caught, as this may result in personal injury.

7 **Close the front cover of the finisher.**

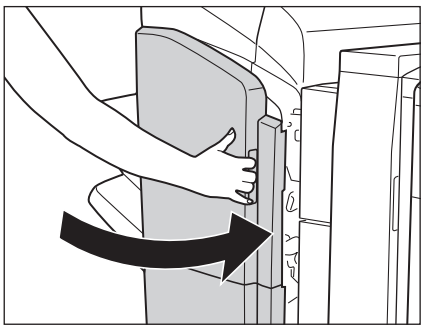

CAUTION

When closing the front cover of the finisher, be careful not to get your fingers caught, as this may result in personal injury.

8 **Follow the instructions on the touch panel display.**

NOTE

The screen indicating the location of the paper jam repeatedly appears on the touch panel display until the paper jam is entirely cleared. For more information, see "Screens Indicating the Locations of Paper Jams," on p. 2-9.

Professional Puncher Integration Unit-B1 (Optional)

If a paper jam occurs inside the Professional Puncher Integration Unit-B1, a screen prompting you to remove the jammed paper appears on the touch panel display. Check the location of the paper jam, and follow the procedure described below, and the procedure that appears on the touch panel display, to remove the jammed paper.

CAUTION

- **When removing jammed originals or paper, take care not to cut your hands on the edges of the originals or paper.**
- **When removing jammed originals or paper, take care not to cut your hands on the inside of the machine. If you cannot remove the paper, contact your local authorized Canon dealer.**
- **Do not place objects in the open space inside the Professional Puncher Integration Unit-B1, as this may cause the machine to malfunction.**

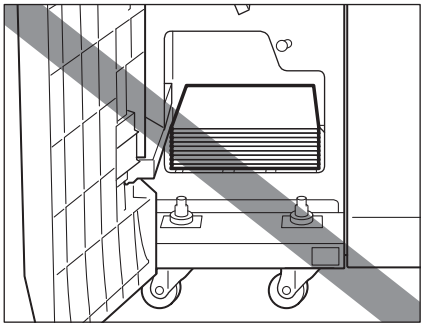

1 **Open the front cover of the professional puncher integration unit.**

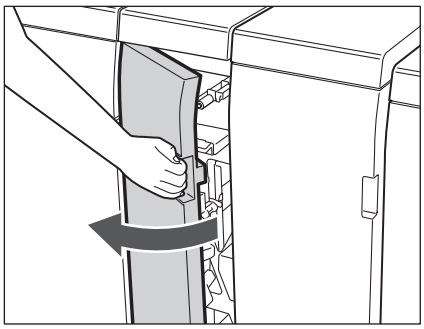

2 **Lift up the guide (A) until it clicks into place.**

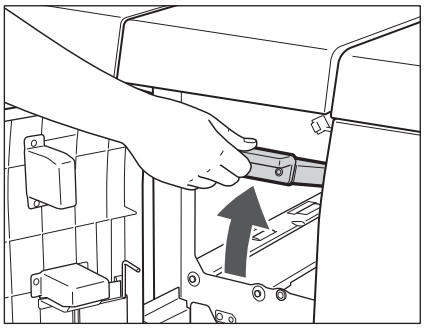

3 **Remove any jammed paper.**

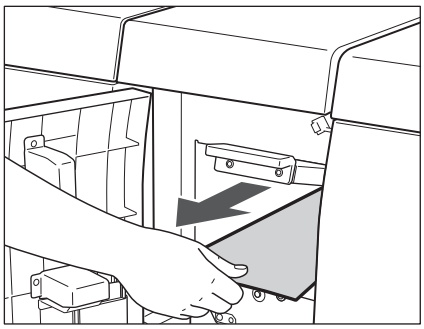

4 **Close the guide (A) until it clicks into place.**

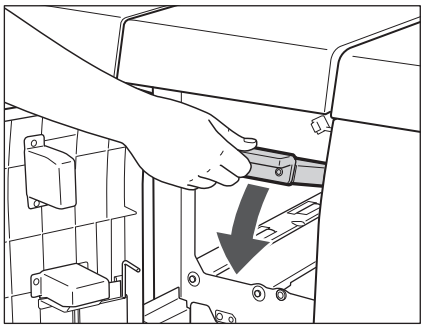

CAUTION

When closing the guide, be careful not to get your fingers caught, as this may result in personal injury.

5 **Turn the lever of the guide (B1) to the right, as shown below, and then open the guide (B1) until it clicks into place.**

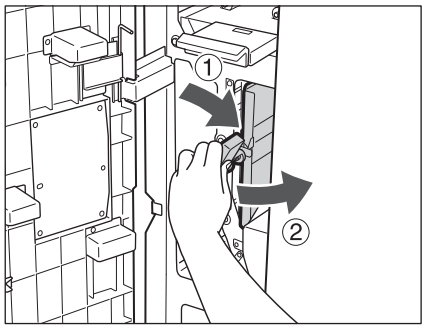

6 **Remove any jammed paper.**

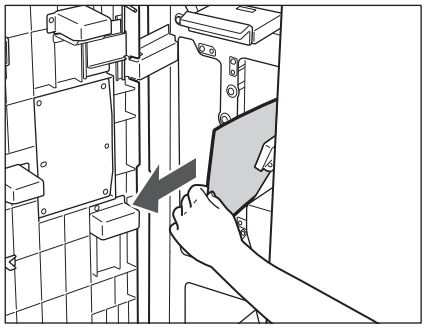

7 **Turn the lever of the guide (B1) to the left until it clicks into place.**

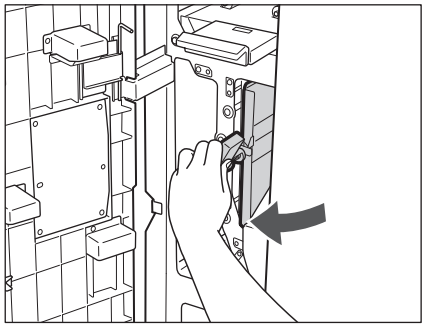

8 **Open the guide (B2) until it clicks into place.**

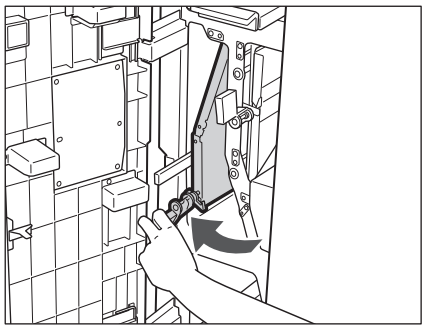

9 Remove any jammed paper.

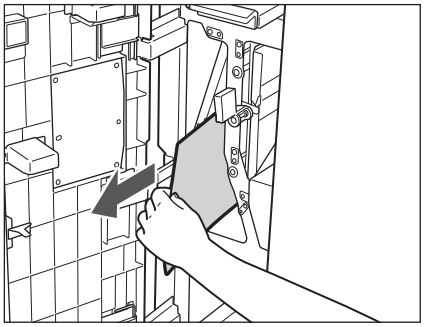

10 Close the guide (B2) until it clicks into place.

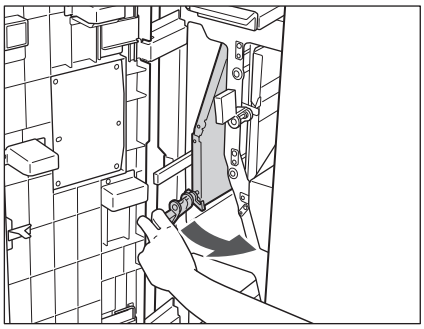

CAUTION

When closing the guide, be careful not to get your fingers caught, as this may result in personal injury.

11 Close the front cover of the professional puncher integration unit.

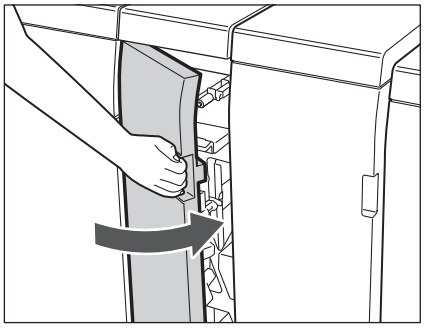

CAUTION

When closing the front cover of the professional puncher integration unit, be careful not to get your fingers caught, as this may result in personal injury.

12 Follow the instructions on the touch panel display.

NOTE

The screen indicating the location of the paper jam repeatedly appears on the touch panel display until the paper jam is entirely cleared. For more information, see "Screens Indicating the Locations of Paper Jams," on p. 2-9.

Puncher (Optional)

If a paper jam occurs inside the Puncher, a screen prompting you to remove the jammed paper appears on the touch panel display. Check the location of the paper jam, and follow the procedure described below, and the procedure that appears on the touch panel display, to remove the jammed paper.

WARNING

There are some areas inside the machine which are subject to high-voltages. When removing jammed paper or when inspecting the inside of the machine, do not allow necklaces, bracelets, or other metal objects to touch the inside of the machine, as this may result in burns or electrical shock.

CAUTION

- **When removing jammed paper, take care not to cut your hands on the edges of the paper.**
- **When removing paper which has become jammed inside the machine, take care not to allow the toner on the jammed paper to come into contact with your hands or clothing, as this will dirty your hands or clothing. If they become dirty, wash them immediately with cold water. Washing them with warm water will set the toner, and make it impossible to remove the toner stains.**
- **When removing paper which has become jammed inside the machine, remove the jammed paper gently to prevent the toner on the paper from scattering and getting into your eyes or mouth. If the toner gets into your eyes or mouth, wash them immediately with cold water and immediately consult a physician.**

NOTE

This procedure is only required when the Puncher is attached to the machine.

1 **Open the front cover of the puncher.**

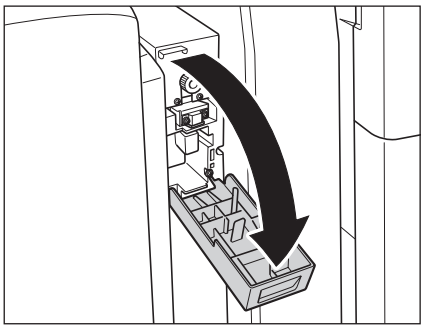

2 **Set the green knob to the fixed position.**

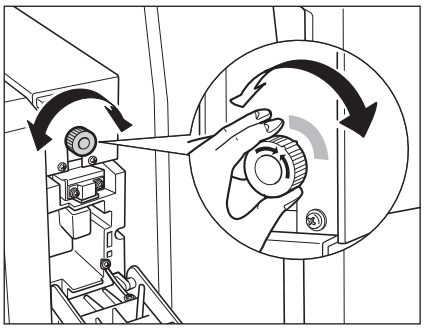

3 Open the top cover of the puncher.

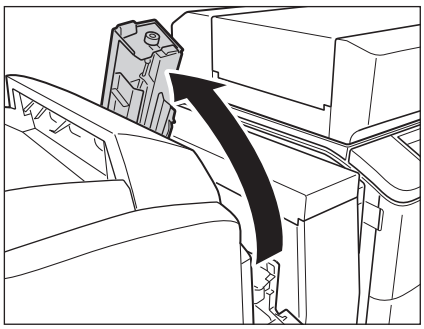

4 Remove any jammed paper from the puncher.

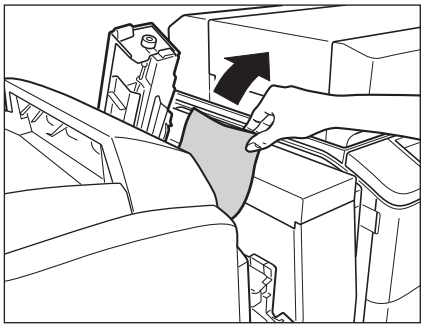

5 Close the top cover of the puncher.

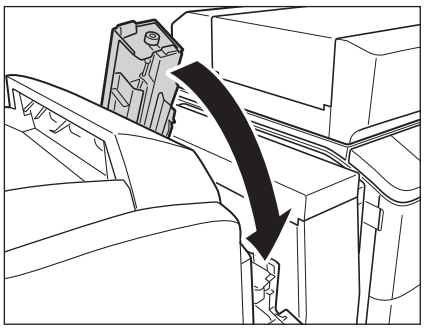

CAUTION

When closing the top cover of the puncher, be careful not to get your fingers caught, as this may result in personal injury.

6 Close the front cover of the puncher.

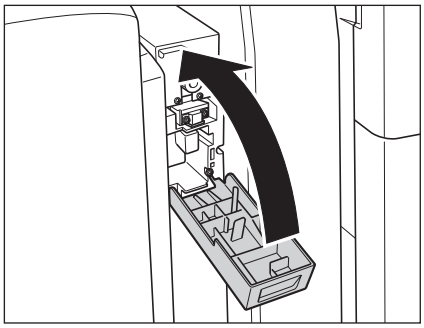

If you opened the insertion unit in step 4, gently push down the insertion unit back into its original position.

CAUTION

When closing the front cover of the puncher, be careful not to get your fingers caught, as this may result in personal injury.

7 Follow the instructions on the touch panel display.

NOTE

The screen indicating the location of the paper jam repeatedly appears on the touch panel display until the paper jam is entirely cleared. For more information, see "Screens Indicating the Locations of Paper Jams," on p. 2-9.

Clearing Staple Jams

If a staple jam occurs, follow the procedure described below to remove the jammed staples.

Staple Finisher-A1/Booklet Finisher-A1 (Optional)

If a staple jam occurs in the stapler unit of the Staple Finisher-A1 or Booklet Finisher-A1, a screen prompting you to remove the jammed staples appears on the touch panel display. Check the location of the staple jam, and follow the procedure described below, and the procedure that appears on the touch panel display, to remove any jammed staples.

IMPORTANT

Take care when handling the optional equipment that is attached to the machine. When an optional unit's cover is opened to replace a staple cartridge, discard the punch waste, discard the trim waste, or clear paper or staple jams, prints may still be output if other optional units are operating normally, and are not involved in the paper or staple jam removal procedure.

1 **Remove the paper waiting to be stapled from the delivery tray.**

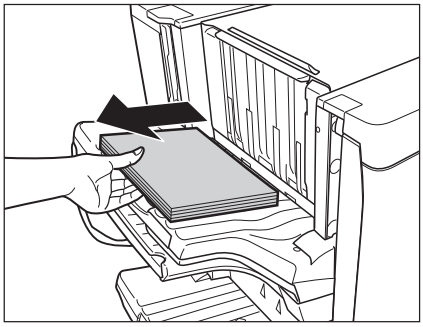

2 **Open the front cover of the finisher.**

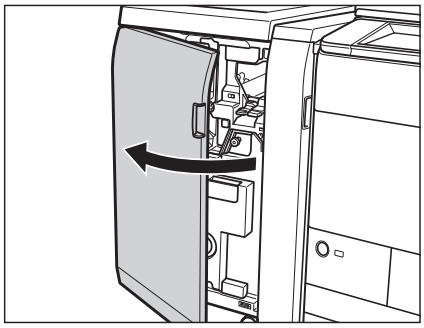

3 **Pull out the staple case.**

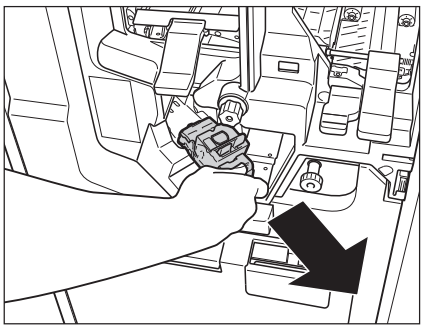

4 **Push up the bracket on the staple case.**

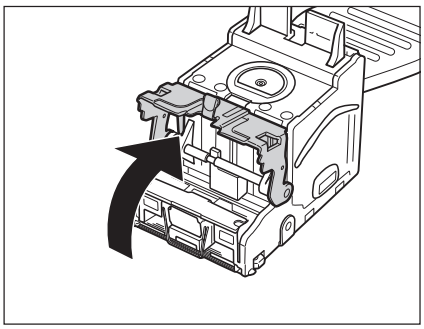

5 **Remove all of the jammed and protruding staples from the staple cartridge.**

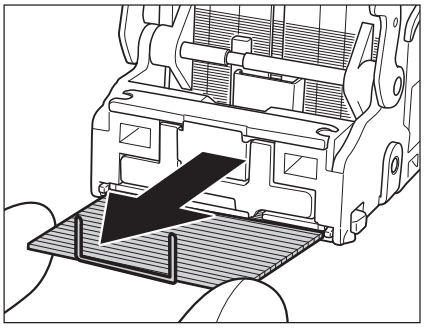

6 **Return the bracket on the staple case to its original position.**

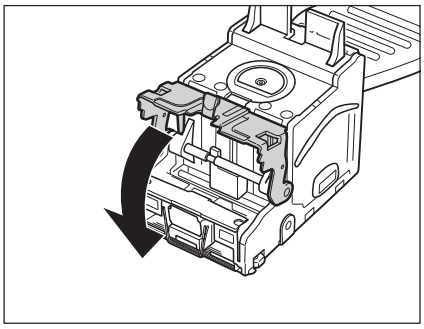

7 **Gently push the staple case back into the stapler unit until it is securely in place.**

Always make sure to insert the staple case far as it can go.

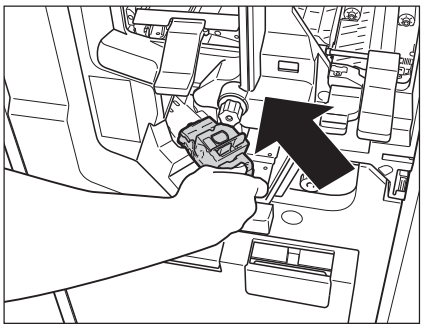

8 **Close the front cover of the finisher.**

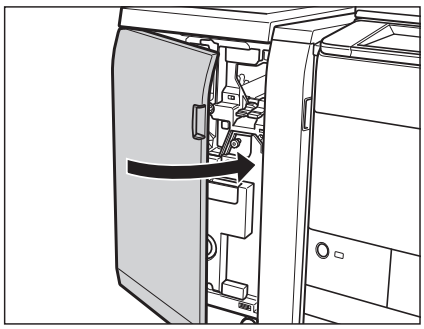

CAUTION

When closing the front cover of the finisher, be careful not to get your fingers caught, as this may result in personal injury.

Saddle Stitcher Unit of the Booklet Finisher-A1 (Optional)

If a staple jam occurs inside the saddle stitcher unit of the Booklet Finisher-A1, a screen prompting you to remove the jammed staples appears on the touch panel display. Check the location of the staple jam, and follow the procedure described below, and the procedure that appears on the touch panel display, to remove any jammed staples.

IMPORTANT

- Take care when handling the optional equipment that is attached to the machine. When an optional unit's cover is opened to replace a staple cartridge, discard the punch waste, discard the trim waste, or clear paper or staple jams, prints may still be output if other optional units are operating normally, and are not involved in the paper or staple jam removal procedure.
- Before clearing the staple jam, remove all output sheets from the booklet tray.

NOTE

- This procedure is only required when the Booklet Finisher-A1 is attached to the machine.
- If a paper jam occurs at the same time as a staple jam, remove the jammed paper before removing the jammed staples.

1 **Open the front cover of the finisher.**

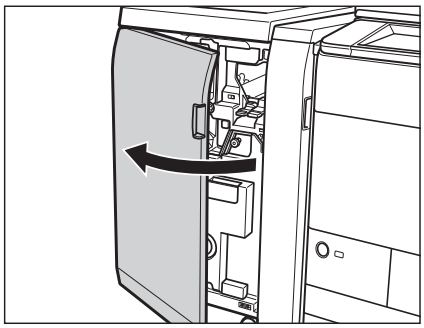

2 **Pull out the saddle stitcher unit (F-C5).**

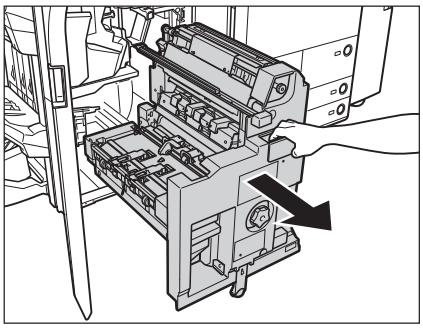

3 **Pull out the staple case from the saddle stitcher unit.**

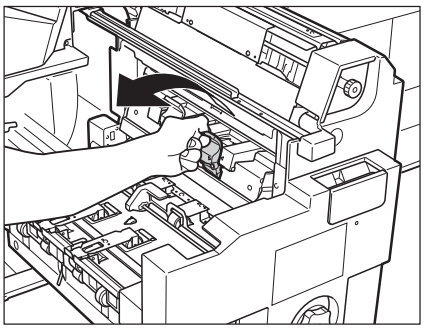

4 **Hold the staple case by its left and right sides, and lower the bracket on the staple case.**

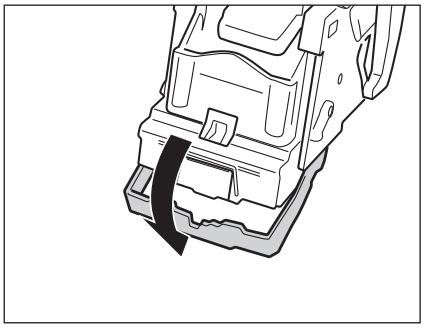

5 **Remove the jammed staples from the staple cartridge.**

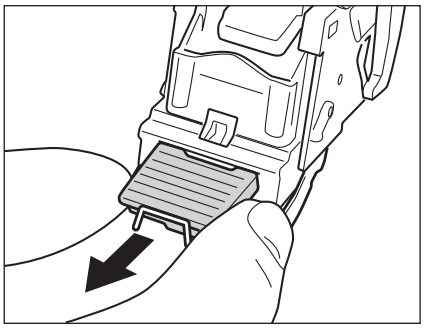

6 **Return the bracket on the staple case to its original position.**

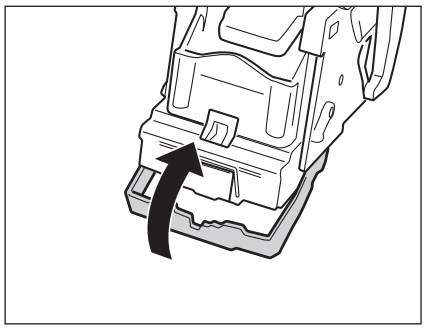

7 Return the staple case to its original position in the saddle stitcher unit.

When returning the staple case, always make sure to the staple case is inserted until the arrows are aligned as shown in the diagram.

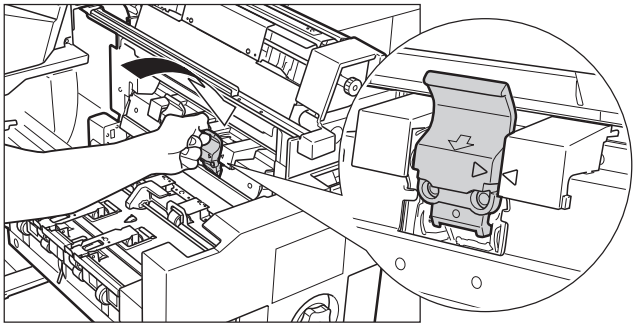

8 Gently push the saddle stitcher unit back into the machine (F-C5).

Always make sure to push the saddle stitcher unit in as far as it can go.

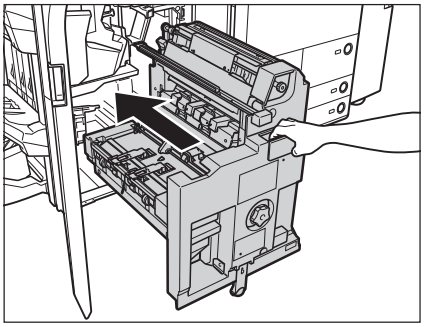

CAUTION

When returning the saddle stitcher unit to its original position, be careful not to get your fingers caught, as this may result in personal injury.

9 Close the front cover of the finisher.

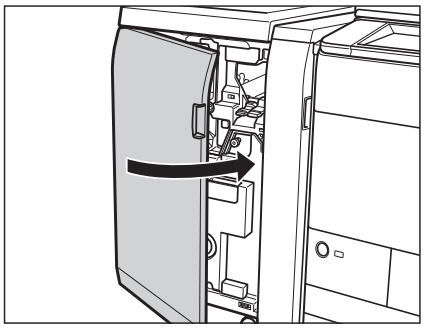

CAUTION

When closing the front cover of the finisher, be careful not to get your fingers caught, as this may result in personal injury.

Staple Finisher-B1/Booklet Finisher-B1 (Optional)

If a staple jam occurs in the stapler unit of the Staple Finisher-B1 or Booklet Finisher-B1, a screen prompting you to remove the jammed staples appears on the touch panel display. Check the location of the staple jam, and follow the procedure described below, and the procedure that appears on the touch panel display, to remove any jammed staples.

IMPORTANT

Make sure to close all covers and drawers of the machine before clearing any staple jams.

1 **Open the front cover of the finisher.**

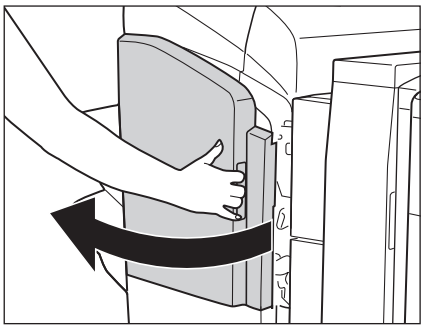

Staple Finisher-B1

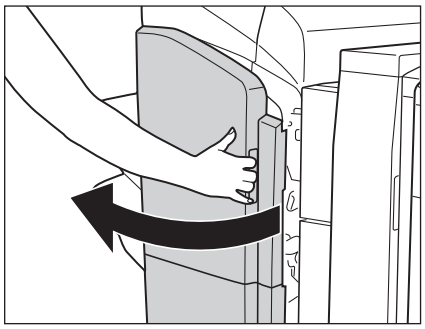

Booklet Finisher-B1

2 **Lift and pull out the staple case from the stapler unit, holding it by its green tab.**

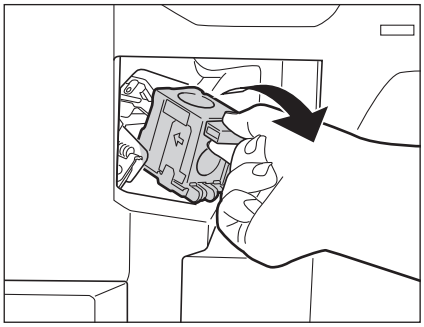

3 **Push down the tab on the staple case.**

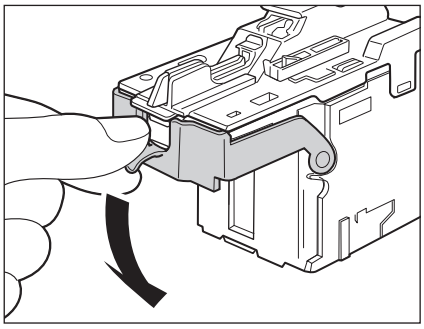

4 **Remove all of the staples that slide from the staple case.**

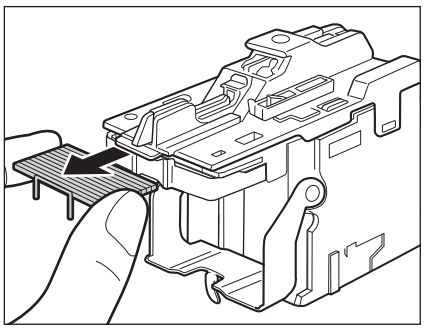

5 **Return the tab on the staple case to its original position.**

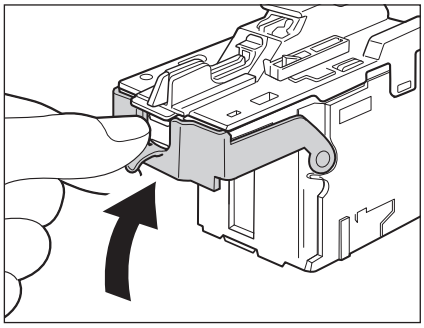

6 **Gently push the staple case back into the stapler unit until it is securely in place.**

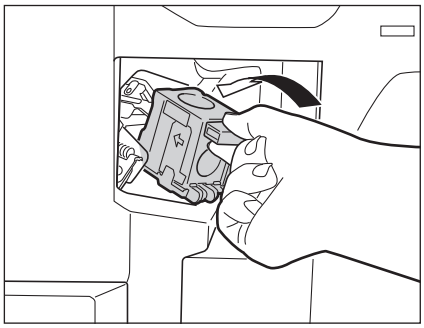

7 **Close the front cover of the finisher.**

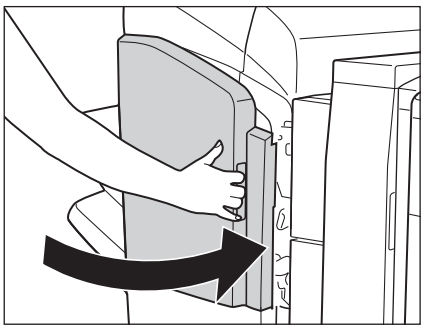

Staple Finisher-B1

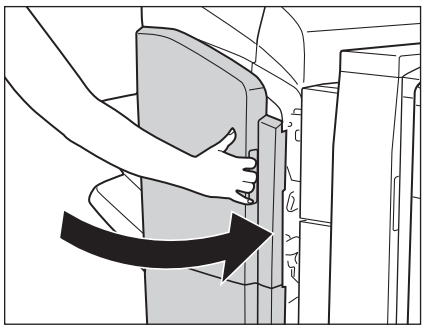

Booklet Finisher-B1

CAUTION

When closing the front cover of the finisher, be careful not to get your fingers caught, as this may result in personal injury.

NOTE

If there are no staples ready for stapling after the cover is closed, the stapler unit automatically performs a "dry" stapling operation to reposition the staples.

Saddle Stitcher Unit of the Booklet Finisher-B1 (Optional)

If a staple jam occurs inside the saddle stitcher unit of the Booklet Finisher-B1, a screen prompting you to remove the jammed staples appears on the touch panel display. Check the location of the staple jam, and follow the procedure described below, and the procedure that appears on the touch panel display, to remove any jammed staples.

IMPORTANT

- If necessary, make sure to remove all of the paper in the Booklet tray before clearing a staple jam inside the saddle stitcher unit.
- Make sure to close all covers and drawers of the machine before clearing any staple jams.

1 **Open the front cover of the finisher.**

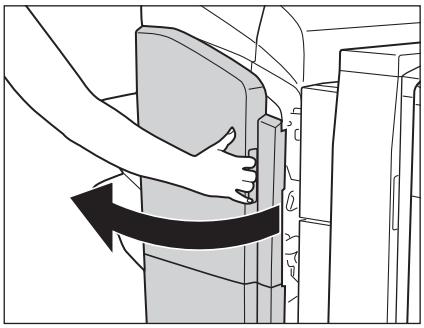

2 **Grip the saddle stitcher unit by its handle, and pull it out of the finisher until it stops.**

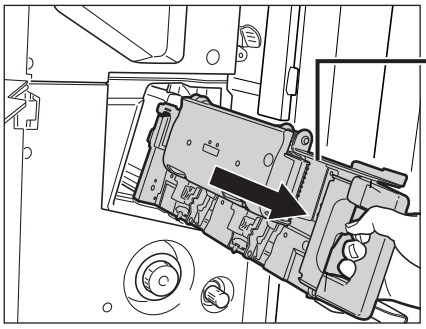

3 **Pull the stapler unit of the saddle stitcher unit towards you, and then push it up.**

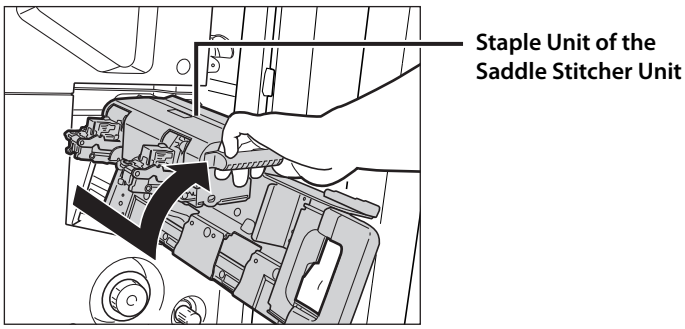

4 **Pull out the staple cartridge containing the jammed staples, holding it by its left and right sides.**

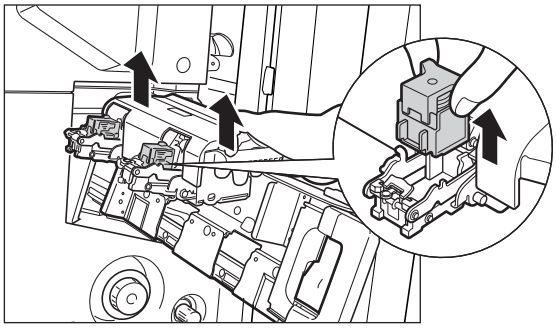

5 **On the staple case, push down Part A, and push up Part B.**

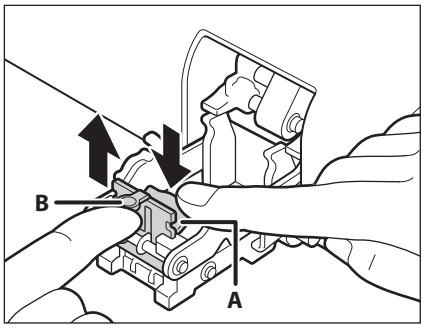

6 **Remove any jammed staples, and return Part B to its original position.**

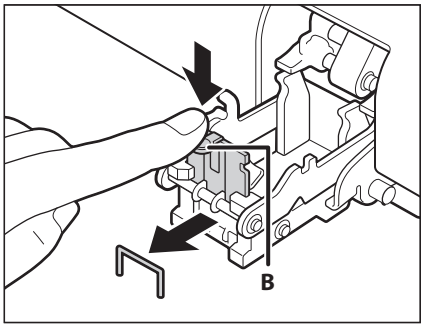

7 **Return the staple cartridge to its original position.**

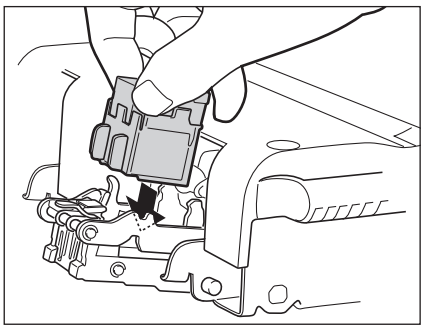

8 **Pull the stapler unit of the saddle stitcher unit towards you, then push it down into its original position.**

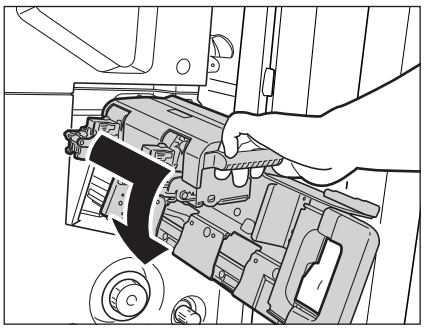

9 **Gently push the saddle stitcher unit back into its original position.**

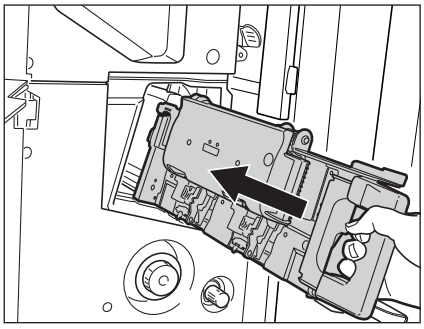

10 Close the front cover of the finisher.

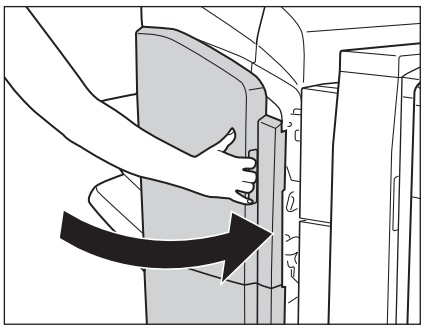

CAUTION

When closing the front cover of the finisher, be careful not to get your fingers caught, as this may result in personal injury.

NOTE

When you have cleared the staple jam, be sure to manually reposition the staples in the saddle stitcher unit. (See e-Manual > Settings/Registration)

List of Error Messages

This section explains the various messages that appear on the touch panel display, along with possible causes and remedies.

For explanations of messages that are not listed here, see e-Manual >Scan and Send, Using the Machine to Send/Receive a Fax, Network.

Self-Diagnostic Display

If the machine displays a self-diagnostic error message, follow the instructions on the touch panel display.

Self-diagnostic error messages appear on the touch panel display at the following times:

- When scanning or printing cannot be performed because of an operational error.
- When you need to make a decision or take some action during scanning, copying, or printing.
- When you need to make a decision or take some action while browsing the network.

The following is a list of self-diagnostic error messages, along with their possible causes and remedies.

Load paper.

Cause 1	The machine has run out of paper. No more prints can be made.
Remedy	Load paper. (See "Paper Drawers," on p. 1-2.)
Cause 2	The paper drawer is not correctly inserted.
Remedy	Insert the paper drawer as far as it will go. (See "Paper Drawers," on p. 1-2.)

The most proper A4 size is not available.

Cause 1	The optimum paper size selected by the Automatic Paper Selection mode is not available in the machine.
Remedy	Load the indicated paper size into the machine.
Cause 2	[Paper Drawer Auto Selection On/Off] is set to 'Off'.
Remedy 1	Manually specify the paper drawer.
Remedy 2	Set [Paper Drawer Auto Selection On/Off] to 'On' for the paper drawer in which the displayed paper size is loaded. (See e-Manual > Settings/Registration.)
Cause 3	A paper type not supported by automatic paper selection is loaded.
Remedy 1	Manually specify the paper drawer.
Remedy 2	Set [Consider Paper Type] in [Paper Drawer Auto Selection On/Off] to 'Off' when copying. (See e-Manual > Settings/Registration.)

Return the originals to their correct order, then press the [Start] key.

Cause	Scanning was stopped due to a problem with the feeder.
Remedy	Arrange the originals in page order with the first page on top. Place the originals back into the feeder's original supply tray, and press (Settings/Registration).

Return the originals to their correct order, then press the [Start] key. (The data size of the scanned original exceeded the limit. Settings will be automatically corrected and the originals will be scanned again.)

Cause	Scanning has stopped because the data size of the scanned original exceeds the maximum data size that the machine can handle.
Remedy	Try scanning the original again from the first page. If scanning is still not possible, reduce the Sharpness mode setting, and select [Text] for the original type.

Scanning was stopped because the data size of the scanned original exceeded the limit. Scanning may be possible if sharpness is reduced, and Original Type is set to Text.

Cause	Scanning has stopped because the data size of the scanned original exceeds the maximum data size that the machine can handle.
Remedy	Reduce the Sharpness mode settings, and select [Text] for the original type.

Remove the paper from the output tray.

Cause	Prints from the previous job remain in the output tray.
Remedy	Remove the prints remaining in the output tray. Printing automatically resumes.

Remove the paper from the booklet tray.

Cause	Prints from the previous job remain in the Booklet tray of the Booklet Finisher.
Remedy	Remove the prints remaining in the Booklet tray. Printing automatically resumes.

Yellow toner is low. Replacement not yet needed.

Cause	Toner of the displayed color is running low.
Remedy	Prepare the displayed color's toner cartridge for replacement. (See "Replacing the Toner Cartridge," on p. 1-58.)

Replace toner cartridge. (Black)

Cause 1	Printing will soon not be possible because the toner of the displayed color is running out.
Cause 2	Printing is not possible because toner of the displayed color has run out.
Remedy	Replace the displayed color's toner cartridge. (See "Replacing the Toner Cartridge," on p. 1-58.)

Replace toner cartridge. (Black copying is possible.)

Cause	Color copying is not possible because toner of the displayed color has run out.
Remedy	Replace the displayed color's toner cartridge. (See "Replacing the Toner Cartridge," on p. 1-58.)

Replace toner cartridge. (Black printing is possible.)

Cause	Color printing from the Mail Box and Fax/I-Fax Inbox is not possible because toner of the displayed color has run out.
Remedy	Replace the displayed color's toner cartridge. (See "Replacing the Toner Cartridge," on p. 1-58.)

Insert toner cartridge. (Cyan)

Cause	The toner cartridge of the displayed color is not inserted properly.
Remedy	Make sure that the toner cartridge is inserted properly. (See "Replacing the Toner Cartridge," on p. 1-58.)

Place the original on the platen glass.

Cause	The specified mode requires that the original be placed on the platen glass, but there is no original on the platen glass.
Remedy	Place the original on the platen glass.

Remove the original from the platen glass.

Cause	An original remains on the platen glass.
Remedy	Remove the original from the platen glass, and place the new original.

Remove the original from the feeder.

Cause	The machine cannot scan your original using the feeder. An original is placed in the feeder and on the platen glass.
Remedy	Remove the original from the feeder.

Original scanning area (thin glass strip) is dirty.

Cause	The feeder's scanning area is dirty.
Remedy	Clean the feeder's scanning area. (See "Duplex Color Image Reader Unit-A1," on p. 1-64.)

Adjusting gradation. Wait a moment...

Cause	The machine is performing an automatic gradation adjustment.
Remedy	Wait for the machine to finish the automatic gradation adjustment. When the adjustment is complete, printing automatically resumes.

Preparing for color printing. Please wait.

Cause	The machine is performing an automatic adjustment.
Remedy	Please wait for a moment. Color printing resumes automatically when the adjustment is finished.

Performing multiple jobs...

Cause	Multiple jobs such as print jobs or scan jobs are being executed while performing the scan operation.
Remedy	Wait for the machine to resume the scan operation.

The Dept. ID or PIN is incorrect.

Cause	The Department ID and password you entered are not registered.
Remedy	Contact the system manager of your Department for the correct Department ID and password.

Check covers are closed.

Cause	The cover of the optional equipment is open.
Remedy1	Check that the cover of the Multi-drawer Paper Deck-A1 is closed.
Remedy2	Check that covers of the Staple Finisher or Booklet Finisher are closed.
Remedy3	Check that the cover of the Document Insertion Unit-H1 is closed.
Remedy4	Check that the cover of the Document Insertion/Folding Unit-G1 or Document Insertion Unit-J1 is closed.
Remedy5	Check that the cover of the Paper Folding Unit-G1 is closed.
Remedy6	Check that the cover of the Professional Puncher Integration Unit-B1 is closed.
Remedy7	Check that the cover of the Puncher is closed.

Load staples into the stapler unit.

Cause	There are no staples in the staple cartridge of the Staple Finisher or Booklet Finisher stapler unit.
Remedy	Replace the staple cartridge of the Staple Finisher or Saddle Finisher stapler unit. (See "Replacing the Staple Cartridge in the Stapler Unit," on p. 1-39. (imageRUNNER ADVANCE C9075 PRO/C9065 PRO)), (See "Replacing the Staple Cartridge in the Stapler Unit," on p. 1-50. (imageRUNNER ADVANCE C7065/C7055))

Check punch waste tray.

Cause	The punch waste tray of the Staple Finisher or Booklet Finisher is full or almost full.
Remedy1	Remove the punch waste in the punch waste tray of the Puncher. (See "Removing Punch Waste," on p. 1-48.)
Remedy2	Remove the punch waste in the punch waste tray of the External Puncher. (See "Removing Punch Waste," on p. 1-56.)

Load staples into the saddle stitcher unit.

Cause	There are no staples in the staple cartridge of the Booklet Finisher saddle stitcher unit.
Remedy	Replace the staple cartridge of the Booklet Finisher saddle stitcher unit. (See "Replacing the Staple Cartridge in the Saddle Stitcher Unit," on p. 1-44. (imageRUNNER ADVANCE C9075 PRO/C9065 PRO)), (See "Replacing the Staple Cartridge in the Saddle Stitcher Unit," on p. 1-53. (imageRUNNER ADVANCE C7065/C7055))

Empty the trim waste tray.

Cause	The trim waste tray of the Inner Booklet Trimmer-A1 is full.
Remedy	Remove the trim waste in the trim waste tray of the Inner Booklet Trimmer-A1. (See "Removing Trim Waste," on p. 1-42.)

The hard disk needs to be replaced. (Call service rep.)

Cause	The hard disk is not functioning properly, or is not attached.
Remedy1	Contact your local authorized Canon dealer.
Remedy2	If the optional Removable HDD Kit is installed, check the hard disk.

List of Error Codes without Messages

If a job or operation does not complete successfully, check the error code, and perform the necessary operations according to the error code displayed. You can check the error code on the Details screen when you press [Log] on the Status Monitor/Cancel screen. (See e-Manual > Status Monitor/Cancel.)

If a send, receive, or fax job does not complete successfully, the error code is printed in the Results column on the Activity Report and Send Report. However, if a send job is canceled, "STOP" is printed in the Results column on the Send report. (See Chapter 17, "Appendix," in Getting Started.)

Perform the necessary procedures according to the error code.

001

Cause 1	Different sized originals were scanned without setting the Different Size Originals mode.
Remedy	Set the Different Size Originals mode, and then try scanning again.
Cause 2	Different sized originals were scanned in the 2-Sided Original without setting the Different Size Originals mode.
Remedy	Set the Different Size Originals mode, and then try scanning again.

009

Cause 1	There is no paper.
Remedy	Load paper. (See "Paper Drawers," on p. 1-2.)
Cause 2	The paper is not loaded correctly in the paper source.
Remedy	Set the paper properly. (See "Paper Drawers," on p. 1-2.)

099

Cause1	The current job was interrupted.
Remedy	Try processing the job again.
Cause2	An error occurred because the main power switch was turned OFF while a job was being processed.
Remedy	Check to see if the main power switch is turned ON. Try processing the job again, if necessary. (See e-Manual > Before You Start Using This Machine.)

401

Cause	The memory media, server, or Advanced Box became full, or the maximum number of files that can be saved in the root directory (the top folder inside the memory media) was reached.
Remedy	Delete unnecessary files in the memory media, server, or Advanced Box, or create a new folder and move existing files to that folder to organize the files in the root directory.

402

Cause	While the data, such as image data, was being transferred to the memory media, some error occurred because the unauthorized character was included in the file name.
Remedy	Rename the file.

403

Cause	The job was failed because the same file name existed. Generally, if the same file name exists, a file will be automatically renamed by adding a number, which ranges from 1 to 999, to the tail of its file name in order to avoid naming conflicts. However, this error occurred because the file with the same number already added to its file name existed.
Remedy	Rename the file, and then write the data again.

404

Cause	The job was failed because the write protect switch of the memory media was turned ON.
Remedy	Turn OFF the write protect switch of the memory media.

406

Cause 1	The job failed because the memory media was removed from the USB port or the Network Place was deleted while the job was in progress.
Remedy	Confirm that the memory media is properly inserted or the Network Place is existed, and then write the data again.
Cause 2	While data, such as image data, was being transferred to the memory media, some error occurred. (The connected memory media may be formatted with an unsupported file system.)
Remedy	Check the status of the memory media and confirm that it is formatted with the file system that the machine supports (FAT32). Then, perform the operation again.
Cause 3	The file size has reached the limit.
Remedy	Lower the resolution or delete pages, and then try processing the job again.

407

Cause	The length of the full path to the specified file (or folder) exceeded the supported limit.
Remedy	The limit of the length of the full path is 256. Change or shorten the file name to be written.

409

Cause	The files or folders cannot be stored because the number of files or folders that can be stored has reached the limit.
Remedy	Change the storage.

410

Cause	The files cannot be stored because there are too many jobs waiting to be stored.
Remedy	Try storing the files again after the previous job finishes being stored.

411

Cause	The files are already locked by the other operations.
Remedy	Wait a few moments, and try processing the job again.

701

Cause 1	The specified Department ID does not exist, or the PIN has changed.
Remedy	Enter the correct Department ID or password using 0-9 (numeric keys) on the control panel, and try again.
Cause 2	The Department ID or password was changed while the machine was processing a job.
Remedy	Change the Department ID and password, and try again. If you do not know the password, contact your System Manager.
Cause 3	<Allow Printer Jobs with Unknown IDs> is set to 'Off'.
Remedy	Set <Allow Printer Jobs with Unknown IDs> to 'On'. (See e-Manual > Security.)

703

Cause	The hard disk is full, and no more images can be scanned.
Remedy 1	Wait a few moments, and try scanning again after the current send jobs complete.
Remedy 2	Erase files stored in the Mail Box and the Fax/I-Fax Inbox. If the machine still does not operate normally, turn the main power OFF, and then back ON again. (See e-Manual > Before You Start Using This Machine.)

#711

Cause	The Mail Box and the Fax/I-Fax Inbox memory is full.
Remedy	Erase unnecessary files stored in the Mail Box and the Fax/I-Fax Inbox. (See e-Manual > Fax/I-Fax Inbox and Access Stored Files.)

712

Cause	The maximum number of files are already stored in the Mail Box and the Fax/I-Fax Inbox.
Remedy	Erase unnecessary files stored in the Mail Box and the Fax/I-Fax Inbox. (See e-Manual > Fax/I-Fax Inbox and Access Stored Files.)

749

Cause	You could not execute the job because a service call message is being displayed.
Remedy	Turn the main power OFF, wait 10 or more seconds, and turn the main power back ON. If the machine still does not work normally, turn the main power OFF, disconnect the machine, and contact your local authorized Canon dealer. (See e-Manual > Before You Start Using This Machine.)

#754

Cause	The client machine is not functioning while delivering the device information or the network is down. The destination setting is not correct.
Remedy	Check the client machine and network. Check the destination settings.

759

Cause	An error occurred while sending to the URL of a User Inbox.
Remedy	Contact your System Manager.

807

Cause	You do not have the access privilege to the specified directory.
Remedy	Set the access privilege to the directory in the server, resend the file to the directory with the access privilege, or contact your System Manager.

816

Cause	You cannot print because the set page limit total has been reached.
Remedy	Contact your System Manager.

825

Cause 1	Reserved or current print jobs cannot be performed because the Department ID and password have been deleted, or the password has been changed.
Remedy	Try again with the Department ID and password that are registered. Register the Department ID and password. If you do not know the password, contact your System Manager.
Cause 2	Device information could not be delivered because the destination client machine has a system manager registered, but the system manager is not set on the host machine. Or, device information could not be delivered because the System Manager ID and System PIN registered in the client machine are different from the System Manager ID and System PIN registered in the host machine.
Remedy	Register the same System Manager ID and System PIN in the client machine as the System Manager ID and System PIN registered in the host machine, and deliver the device information again.

849

Cause	Device information could not be delivered because the client machine is processing a job.
Remedy	Try delivering device information again after the client machine finishes processing the job.

850

Cause	Device information could not be delivered because a screen relating to the device information to be delivered is being processed.
Remedy	Try delivering the device information again after the screen is cleared from the client machine. (See e-Manual > Security.)

851

Cause 1	There is insufficient memory remaining in the system.
Remedy	Check the system's available memory, and delete any unnecessary files stored in the Mail Box and Fax/I-Fax Inbox. (See e-Manual > Fax/I-Fax Inbox and Access Stored Files.)
Cause 2	The machine's memory is full.
Remedy	Erase unnecessary files and files with errors from memory to increase the amount of available memory. (See e-Manual > Fax/I-Fax Inbox and Access Stored Files.)
Cause 3	The scanned file cannot be stored because there are more than 1,500 files in the specified Mail Box and Fax/I-Fax Inbox.
Remedy	If there are a large number of files, delete the unnecessary ones from the specified Mail Box and Fax/I-Fax Inbox. (See e-Manual > Fax/I-Fax Inbox and Access Stored Files.)

852

Cause	An error occurred because the main power was turned OFF due to an unspecified cause while a job was being processed.
Remedy	Check to see that the power plug is firmly inserted into the power outlet and that it is not in a situation where the power can easily be turned OFF. Try processing the job again, if necessary.

853

Cause 1	When trying to print a large number of pages, the job is not performed due to insufficient memory resources.
Remedy	Reduce the number of pages to print, or perform the print job again when no other jobs are reserved.
Cause 2	The job could not be processed, because it was canceled from the printer driver while the print data was being sent to the machine.
Remedy	Try printing again.
Cause 3	The spool memory is full when [Use Spool Function] in [Network Settings] in [Device Use Settings] (Settings/Registration) is set to 'On', therefore, data received from the host could not be spooled.
Remedy	Set [Use Spool Function] in [Network Settings] in [Device Use Settings] (Settings/Registration) to 'Off', and try sending the print data again. (See e-Manual > Network.)
Cause 4	The maximum number of receivable data exceeds the receive limit.
Remedy	Try printing the files again after all current jobs are complete. If you still cannot print, check the sent data.
Cause 5	The number of secured documents exceeded the maximum limit that can be reserved at a time.
Remedy	Print or erase the secured documents that are stored in the machine, and try printing again. (See e-Manual > Print.)

854

Cause	Device information could not be delivered because the client machine has [Restrict Receiving Device Information] in [Device Information Delivery Settings] in [Management Settings] (Settings/Registration Screen) set to 'On'.
Remedy	Try delivering device information again after setting Restrictions for [Restrict Receiving Device Information] in [Device Information Delivery Settings] in [Management Settings] (Settings/Registration) to 'Off'. (See e-Manual > Security.)

855

Cause	Device information could not be delivered because a language that the client machine cannot handle was included in the device information.
Remedy	Contact your local authorized Canon dealer.

856

Cause	The job was canceled because there was not enough free space on the hard disk to store the temporary data.
Remedy	Contact your System Manager.

857

Cause	Data reception timed out, or the job was canceled at the host.
Remedy	Check that the network is functioning properly, and then try printing again.

858

Cause	There is a problem with the print data sent from an external application.
Remedy	Check the settings of the data sent to the machine, make sure they are compatible with the machine, and try sending the data again.

859

Cause 1	A compression error occurred with the image data.
Remedy	Check the print settings, and try printing again.
Cause 2	An original was not scanned properly, or the orientation of the original was incorrect.
Remedy 1	Check the scan settings, and try scanning again.
Remedy 2	Turn the main power OFF, wait for 10 or more seconds, and turn the main power back ON.

860

Cause 1	A paper jam occurred during printing.
Remedy	Try printing again.
Cause 2	You tried to print on a transparency sheet not made for this machine.
Remedy	Load transparencies made for this machine into the machine and then try printing again.
Cause 3	A print job using a PDL that is not supported by this machine was inserted.
Remedy	Confirm the PDLs supported by this machine with your system administrator, and use the appropriate printer driver.
Cause 4	An unsupported combination of settings was specified for Color Mode and Superimpose Image (Overlay).
Remedy	Perform printing again after changing the settings by selecting a color mode that supports Superimpose Image (Overlay) for the selected image form, or selecting an image form that supports Superimpose Image (Overlay) with the selected color mode.

861

Cause	An error occurred while processing PDL data or image data.
Remedy	Confirm the print settings you made when printing from a computer.

862

Cause 1	The saddle finisher trays have exceeded their stacking limits. (See Chapter 17, "Appendix," in *Getting Started*.)
Remedy	Change the print data or print settings, and try printing again.
Cause 2	A combination of settings which is not supported was set.
Remedy	Change the print data or print settings, and try printing again.
Cause 3	Data which is not guaranteed to be compatible was printed.
Remedy	Change the print data or print settings, and try printing again.

863

Cause	An error occurred while processing PDL data or image data.
Remedy	Check the settings, and try printing again.

865

Cause	A function related to performing jobs is restricted.
Remedy	Contact your System Manager.

889

Cause	You cannot scan or print the document because it has Scan Lock Information embedded.
Remedy	Check the Scan Lock Information or contact your System Manager.

904

Cause	The destination which is registered in [Favorite Settings] cannot be updated even when an address book is acquired from an iR/imagePRESS series connected to the network.
Remedy	Register [Favorite Settings] using the touch panel display of the machine.

905

Cause	You cannot execute the job because some error occurred on the network.
Remedy	Check the length of the path, access privilege, and the use of the files or folders.

If Memory Becomes Full during Scanning

The machine's memory can store up to approximately 6,200 pages of scanned images. Approximately 6,000 pages of that total is shared by the various functions, including the Copy; Fax; Scan and Send; Scan and Store (Store in Mail Box); Fax/I-Fax Inbox; and, printing from computer functions. In addition, each function is guaranteed to be able to store the following number of pages:

Copy: 100 pages
Print From Computer: 100 pages (excluding Secured Print jobs)

For example, the Copy function can store up to approximately 6,100 pages of scanned images.
100 + 6,000 = 6,100 pages (approximate figures)
However, the number of pages that the machine's memory can store may differ, depending on the amount of memory required for files stored in the Mail Box and Fax/I-Fax Inbox, and jobs that are in the print queue.

If memory becomes full during the scanning of originals, the following message will appear on the touch panel display:

IMPORTANT

When using Fax/Scan and Store, you can send up to 999 pages at one time.

NOTE

Delete any unnecessary files in the Mail Box and Fax/I-Fax Inbox to free up memory.

For the Copy function

1 **Follow the directions below based on the message that appears on the touch panel display.**

- **If the message <Scanning will be stopped because the memory is full. Do you want to print the scanned pages?> appears:**

  ☐ Select [Yes] or [No].

  [Yes]: The pages scanned into memory are printed. When printing is complete, scan the remaining originals.

  [No]: The pages scanned into memory are not printed.

- **If the message <Scanning will be stopped because the memory is full. Wait a moment, then try again.> appears:**

  ☐ Select [OK].

  [OK]: Returns to the Basic Features screen of the function you are using. Scan the job again when the current job is complete.

For the Fax/Scan and Send function

1 **Follow the directions below based on the message that appears on the touch panel display.**

- **If the message <Scanning will be stopped because the memory is full. Do you want to send the scanned pages?> appears:**

  ☐ Select [Yes] or [No].

  [Yes]: The pages scanned into memory are sent. When sending is complete, scan the remaining originals.

  [No]: The pages scanned into memory are not sent.

For the Scan and Store function

1 **Follow the directions below based on the message that appears on the touch panel display.**

- **If the message <Scanning will be stopped because the memory is full. Do you want to store the scanned pages?> appears:**

  ☐ Select [Yes] or [No].

  [Yes]: The pages scanned into memory are stored. When storing is complete, scan the remaining originals.

  [No]: The pages scanned into memory are not stored.

- **If the message <Scanning will be stopped because the memory is full. Wait a moment, then try again.> appears:**

  ☐ Select [OK].

  [OK]: Returns to the Basic Features screen of the function you are using.

Service Call Message

If a malfunction occurs and the machine cannot operate normally, a screen prompting you to contact your local authorized Canon dealer is displayed. Even when the print or scan function does not operate normally, some functions may still be available.

Contacting Your Local Authorized Canon Dealer

If a screen prompting you to contact your local authorized Canon dealer is displayed, follow the procedure described below.

WARNING

Do not connect or disconnect the power cord with wet hands, as this may result in electrical shock.

CAUTION

Always grasp the power plug when disconnecting the power cord. Pulling on the power cord may expose or snap the core wire, or otherwise damage the power cord. If the power cord is damaged, this could cause current to leak, resulting in a fire or electrical shock.

IMPORTANT

If you turn OFF the main power switch when there is a job waiting to print, that job is erased.

1 **Press the main power switch to the "⏻" side.**

When operating the main power switch, open the main power switch cover.

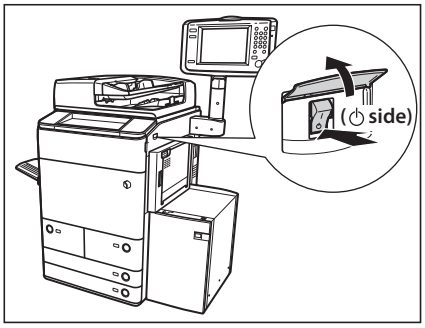

2 **Wait at least 10 seconds after the Main Power Indicator is turned off, and then turn the main power switch back to "I" side.**

When operating the main power switch, open the main power switch cover.

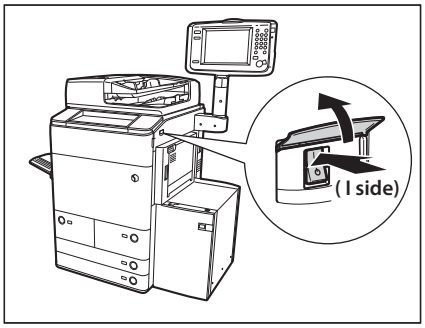

3 **If the machine still does not operate normally, follow the procedure below, and then contact your local authorized Canon dealer.**

- ☐ Turn the main power switch OFF.
- ☐ Remove the power plug from the power outlet.

NOTE

When you contact your local authorized Canon dealer, have the following information available:
- Product name
- Details of the malfunction
- The error code displayed on the touch panel display

Setting the Limited Functions Mode from the Service Call Message Screen

If the Service Call Message screen appears indicating a malfunction of a Finisher mode, you can clear it by turning the Limited Functions Mode 'On' to temporarily limit the use of the finishing modes. However, after the Limited Functions Mode is deactivated, the Service Call Message screen may appear again, unless the cause of the malfunction is removed.

IMPORTANT

If you shutdown the machine when there is a job waiting to print, that job is erased.

NOTE

If you set [Limited Functions Mode] to 'On' from the Service Call Message screen, [Limited Functions Mode] in [Management Settings] (Settings/Registration) is also set to 'On'. (See e-Manual > Security.)

1 **Press [Limited Functions Mode].**

2 **Press [Yes].**

A message prompting you press [Shutdown] and to turn the main power switch back ON appears.

3 **Press the main power switch to the "⏻" side.**

When operating the main power switch, open the main power switch cover.

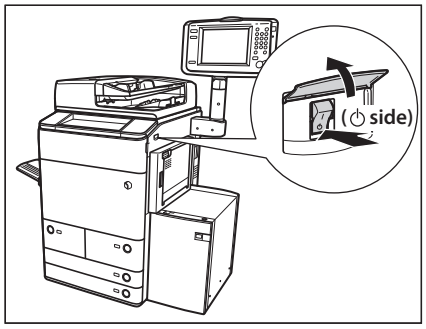

4 **Wait at least 10 seconds after the Main Power Indicator is turned off, and then turn the main power switch back to "I" side.**

When operating the main power switch, open the main power switch cover.

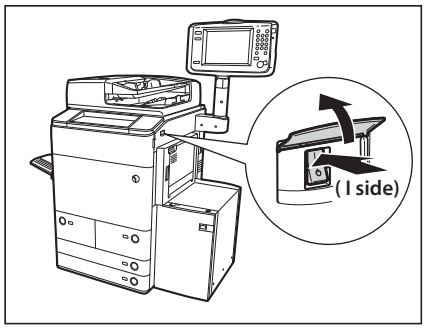

The machine starts up in the Limited Functions mode.

Functions Available When the Printer/Scanner Cannot Be Used Due to an Error

Some functions may still be available even when one of the following error messages that indicate the Print and Scan functions cannot be used is displayed on the bottom of the screen.

When the Print function is restricted: <Check the printer. Call service representative.>

When the Scan function is restricted: <Check the scanner. Call service representative.>

You can use the following functions even when the Print and Scan functions are restricted.

- Main Menu Screen

✓: Available -: Unavailable

Available Function	When the Print function is restricted	When the Scan function is restricted
Copying	-	-
Fax	✓	-
Scan and Send	✓	-
Scan and Store	✓*1	-
Access Stored Files	-	✓*2
Fax/I-Fax Inbox	-	✓
Secured Print	-	✓
Scanner	✓	-
Hold	-	✓
Web Access	✓	✓
Settings/Reg. Shortcut	-	-
Tutorial	✓	✓
iW Function Flow	-	-
Scan Code Analyzer*3	✓	-
Other MEAP Applications*4	✓	✓

- Control Panel

✓: Available -: Unavailable

Available Function	When the Print function is restricted	When the Scan function is restricted
Quick Menu*5	✓	✓
Status Monitor/Cancel	✓*6	✓
Settings/Registration	-	-

- Operation from a Computer

✓: Available -: Unavailable

Available Function	When the Print function is restricted	When the Scan function is restricted
Remote UI	✓	✓
MEAP Application*4	✓	✓

*1 [Print List] on the Mail Box Selection screen is not available.

*2 [Add Files (Scan and Store)] on the Edit File screen is not available.

*3 Document Scan Code Analyzer is included in the Document Scan Lock Kit. For information on the optional products required to use this function, see e-Manual > Optional Products.

*4 Available by installing each MEAP application. May not be available depending on the restricted functions.

*5 The registered button may not be available depending on the restricted functions.

*6 [Print List] on the Job Log screen and [Register] on the Consumable screen are not available.

IMPORTANT

- A print job is automatically canceled when the Print function is restricted. A scan job is automatically canceled when the Scan function is restricted.
- The machine may not enter the Sleep mode completely when the function is restricted due to an error.

NOTE

- If the target function is restricted due to an error, the function is not available when you use the shortcut key on the top of the Main Menu screen or when you use the Quick Menu.
- [Remove Toner Cartridges] is not available when the Print function is restricted.

When the Power Does Not Turn ON

If you cannot operate the machine, even though the main power switch and the control panel power switch are both turned ON, always check that the breaker is not in the OFF position.

If the breaker is in the OFF position, contact your local authorized Canon dealer without turning the breaker back ON.

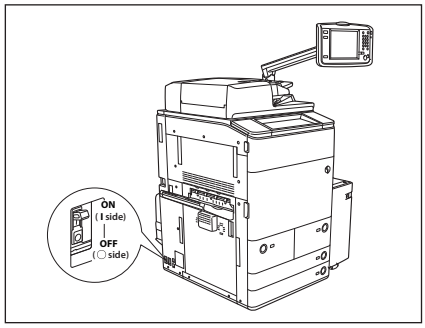

WARNING

If the breaker is in the OFF position, do not switch the current leakage breaker back ON. Doing so may lead to a fire, electrical shock, smoke, or the tripping of other breakers in the facility.

Printer/Fax Driver Troubleshooting

See the "Troubleshooting" in the driver help to resolve problems when using the printer driver or fax driver for Windows. In this section, screens for the printer driver are used.

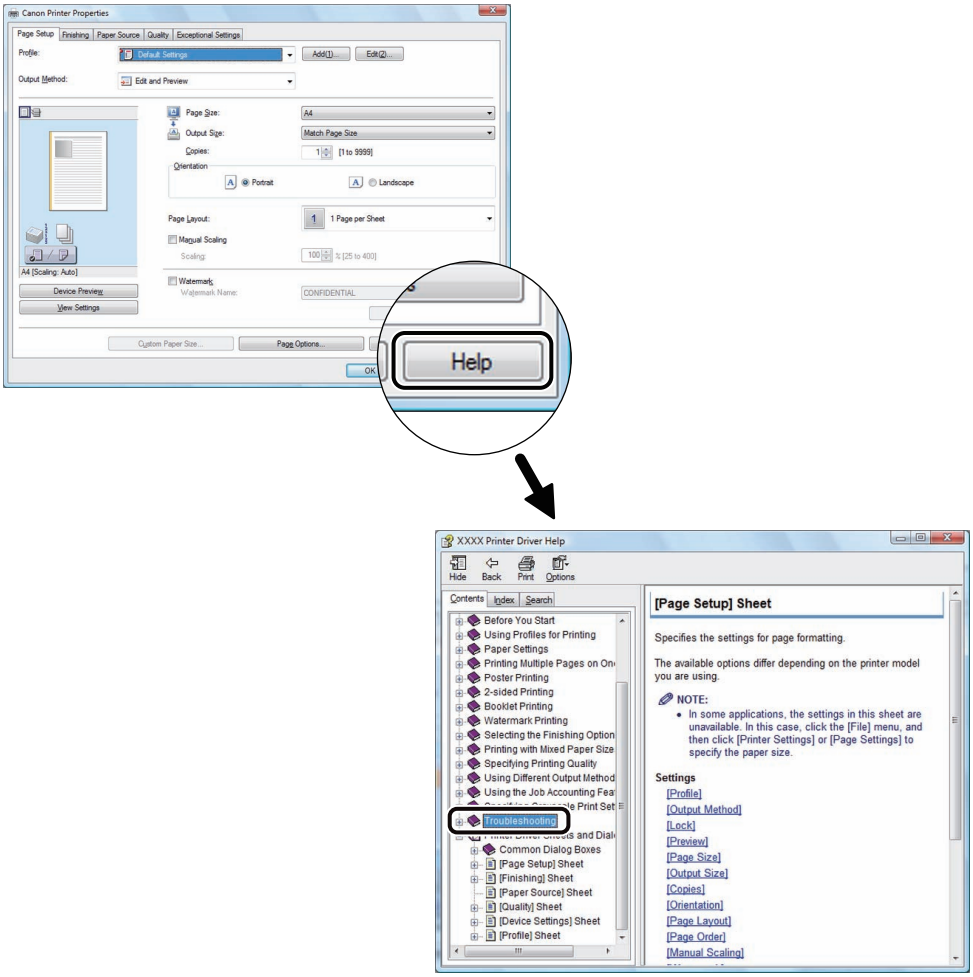

Appendix

3
CHAPTER

This section includes the index.

Index 3-2

Index

AA

Abbreviations Used in This Manual, ix

B

Booklet Finisher-A1
- Clearing paper jams, 2-66, 2-72
- Clearing staple jams, 2-95, 2-97
- Labels for Clearing Paper Jams, 2-4
- Replacing the Staple Cartridge in the Saddle Stitcher Unit, 1-44
- Replacing the Staple Cartridge in the Stapler Unit, 1-39

Booklet Finisher-B1
- Clearing paper jams, 2-78, 2-80, 2-83, 2-86
- Clearing staple jams, 2-100, 2-102
- Replacing the Staple Cartridge in the Saddle Stitcher Unit, 1-53
- Replacing the Staple Cartridge in the Stapler Unit, 1-50

Breaker, 2-120

Buffer Pass Unit-F1
- Clearing paper jams, 2-29

C

Cleaning
- Automatic feeder cleaning, 1-67
- Cleaning the touch panel display, 1-68
- Drum cleaning, 1-68
- Platen Glass and Underside of the Feeder/Platen Cover, 1-63
- Roller cleaning, 1-68
- Wire cleaning, 1-67

Consumables
- Paper stock, 1-69
- Stamp Cartridge, 1-71
- Toner, 1-70

Copyright, ix

D

Disclaimers, ix

Displays Used in This Manual, viii

Document Insertion/Folding Unit-G1
- Clearing paper jams, 2-56

Document Insertion/Folding Unit-G1/Document Insertion Unit-J1
- Clearing paper jams, 2-49, 2-52
- Loading paper, 1-34

Document Insertion Unit-H1
- Clearing paper jams, 2-43
- Labels for Clearing Paper Jams, 2-7
- Loading paper, 1-31

Duplex Color Image Reader Unit-A1/Color Image Reader Unit-A1
- Clearing paper jams, 2-32

E

Error messages
- Error codes without messages, 2-109
- Self-diagnostic display, 2-106

F

Fixing Transport Unit
- Clearing paper jams, 2-12

Front Guide, 1-6

I

Illustrations Used in This Manual, viii

Inner Booklet Trimmer-A1
- Removing trim waste, 1-42

K

Keys Used in This Manual, vii

L

Left Guide, 1-6

Legal notices
- Copyright, ix
- Disclaimers, ix
- Trademarks, ix

Loading Paper
- Document Insertion/Folding Unit-G1/Document Insertion Unit-J1, 1-34
- Document Insertion Unit-H1, 1-31
- Multi-drawer Paper Deck-A1, 1-23
- Paper Deck Unit-A1/POD Deck Lite-A1, 1-12
- Paper drawers, 1-2

M

Maintenance
- Loading paper (Document Insertion/Folding Unit-G1/Document Insertion Unit-J1), 1-34
- Loading paper (Document Insertion Unit-H1), 1-31
- Loading paper (Multi-drawer Paper Deck-A1), 1-23
- Loading paper (Paper Deck Unit-A1/POD Deck Lite-A1), 1-12
- Loading paper (paper drawers), 1-2
- Replacing the stamp cartridge, 1-36
- Replacing the Staple Cartridge in the Saddle Stitcher Unit, 1-44, 1-53
- Replacing the Staple Cartridge in the Stapler Unit, 1-39, 1-50
- Replacing the toner cartridges, 1-58

Multi-drawer Paper Deck-A1
- Changing the paper size, 1-27
- Clearing paper jams, 2-37, 2-42
- Loading paper, 1-23

Multi-drawer Paper Deck-A1 (Optional)
- Labels for Clearing Paper Jams, 2-3

Multi-purpose Tray
- Clearing paper jams, 2-15

P

Paper Deck Unit-A1/POD Deck Lite-A1
- Changing the paper size, 1-16
- Clearing paper jams, 2-35
- Loading paper, 1-12

Paper Drawers
- Clearing paper jams, 2-25, 2-26, 2-28

Paper drawers
- About the paper drawers, 1-2
- Adjusting a paper drawer to hold a different paper size, 1-6

Front Guide, 1-6
Left Guide, 1-6
Loading paper, 1-2
Loading tab paper, 1-8
Loading transparencies, 1-8
Paper Folding Unit-G1
Clearing paper jams, 2-61
Labels for Clearing Paper Jams, 2-6
Paper jams
Buffer Pass Unit-F1, 2-29
Document Insertion/Folding Unit-G1, 2-56
Document Insertion Unit-H1, 2-43
Duplex Color Image Reader Unit-A1/Color Image Reader Unit-A1, 2-32
Front Cover of the Booklet Finisher-B1, 2-83
Insertion Unit of the Document Insertion/Folding Unit-G1/Document Insertion Unit-J1, 2-49
Inside of the Staple Finisher-A1/Booklet Finisher-A1, 2-66
Inside the Insertion Unit of the Document Insertion/Folding Unit-G1/Document Insertion Unit-J1, 2-52
Inside the Top Cover of the Staple Finisher-B1/Booklet Finisher-B1, 2-78
Left Cover, 2-21
Left Part of the Machine, 2-22
Main Unit (Fixing Transport Unit), 2-12
Multi-drawer Paper Deck-A1, 2-37, 2-42
Multi-purpose Tray, 2-15
Output Area of the Staple Finisher-B1/Booklet Finisher-B1, 2-80
Paper Deck Unit-A1/POD Deck Lite-A1, 2-35
Paper Drawer (Left), 2-28
Paper Drawer (Right), 2-26
Paper Drawers 3 and 4, 2-25
Paper Folding Unit-G1, 2-61
Professional Puncher Integration Unit-B1, 2-88
Puncher, 2-92
Reducing the Frequency of Paper Jams, 2-2
Right Cover of the Machine, 2-17, 2-19
Saddle Stitcher Unit of the Booklet Finisher-A1, 2-72
Saddle Stitcher Unit of the Booklet Finisher-B1, 2-86
Screens indicating the locations of paper jams, 2-9
Printer/Fax Driver Troubleshooting, 2-121
Professional Puncher Integration Unit-B1
Clearing paper jams, 2-88
Labels for Clearing Paper Jams, 2-8
Puncher
Clearing paper jams, 2-92
Removing punch waste, 1-56

R

Removing Punch Waste, 1-48
Removing Trim Waste, 1-42
Routine Cleaning, 1-63

S

Service call message, 2-117
Stamp Cartridge, 1-71
Replacing the Stamp Cartridge, 1-36
Staple Finisher-A1
Clearing paper jams, 2-66
Clearing staple jams, 2-95
Labels for Clearing Paper Jams, 2-4
Replacing the Staple Cartridge in the Stapler Unit, 1-39
Staple Finisher-B1
Clearing paper jams, 2-78, 2-80
Clearing staple jams, 2-100
Replacing the Staple Cartridge in the Stapler Unit, 1-50
Staple jams
Saddle Stitcher Unit of the Booklet Finisher-A1, 2-97
Saddle Stitcher Unit of the Booklet Finisher-B1, 2-102
Staple Finisher-A1/Booklet Finisher-A1, 2-95
Staple Finisher-B1/Booklet Finisher-B1, 2-100
Symbols Used in This Manual, vii

T

Toner cartridge
About the toner cartridge, 1-70
Replacing the toner cartridges, 1-58
Trademarks, ix
Troubleshooting
Clearing paper jams, 2-9
Clearing Staple Jams, 2-95
Error messages, 2-106
Memory full, 2-115
Printer/Fax Driver Troubleshooting, 2-121
Reducing the Frequency of Paper Jams, 2-2
Service call message, 2-117
When the power does not turn ON, 2-120

CANON INC.
30-2, Shimomaruko 3-chome, Ohta-ku, Tokyo 146-8501, Japan
CANON U.S.A., INC.
One Canon Plaza, Lake Success, NY 11042, U.S.A.
CANON CANADA INC.
6390 Dixie Road Mississauga, Ontario L5T 1P7, Canada
CANON EUROPA N.V.
Bovenkerkerweg 59-61 1185 XB Amstelveen, The Netherlands
(See http://www.canon-europe.com/ for details on your regional dealer)
CANON LATIN AMERICA, INC.
703 Waterford Way Suite 400 Miami, Florida 33126 U.S.A.
CANON AUSTRALIA PTY. LTD
1 Thomas Holt Drive, North Ryde, Sydney, N.S.W. 2113, Australia
CANON CHINA CO., LTD
15F Jinbao Building No.89 Jinbao Street, Dongcheng District, Beijing 100005, China
CANON SINGAPORE PTE. LTD.
1 HarbourFront Avenue #04-01 Keppel Bay Tower, Singapore 098632
CANON HONGKONG CO., LTD
19/F., The Metropolis Tower, 10 Metropolis Drive, Hunghom, Kowloon, Hong Kong

FT5-3484 (000) XXXXXXXXXX © CANON INC. 2010 PRINTED IN CHINA