Canon

imageRUNNER
ADVANCE
C5255/C5250/C5240/C5235

Before Using This Machine

Read this guide first.

Please read this guide before operating this product.
After you finish reading this guide, store it in a safe place for future reference.

ENG

Manuals for the Machine

The manuals for this machine are divided as follows. Please refer to them for detailed information.

Guides with this symbol are printed manuals.

Guides with this symbol are included on the accompanying CD-ROM.

Before Using This Machine (This Manual)

- **Describes precautions for using the machine.**
- **Includes the specifications of the machine.**

Setup Guide

- Describes the settings required before using functions, such as the network settings for sending e-mail.
- Describes how to add applications and update the firmware.

Basic Operation Guide

- Provides an overview of the functions and describes the basic operations.
- Describes the maintenance and troubleshooting procedures for the machine.

e-Manual

HTML manual

- Describes all the functions of the machine. Also provided with a search function that is useful for finding and checking information.
- Includes "Practical Workflows," which introduces flows of practical operations using functions of the machine.

CD-ROM

Driver Installation Guide

- Provides instructions on installing the printer, fax, and other drivers.
  Printer Driver Installation Guide
  Mac Printer Driver Installation Guide
  Fax Driver Installation Guide
  Network ScanGear Installation Guide
- Included on the same CD-ROM as each driver.

CD-ROM

To view the manual in PDF format, Adobe Reader/Adobe Acrobat Reader is required. If Adobe Reader/Adobe Acrobat Reader is not installed on your system, please download it from the Adobe Systems Incorporated website.

Contents

Preface 3

How To Use This Manual 3

Symbols Used in This Manual 3
Keys and Buttons Used in This Manual 3
Illustrations Used in This Manual 4
Abbreviations Used in This Manual 4
Trademarks 5
Operations and Terms Used in This Manual 7

Legal Notices 8

Product Name 8
EMC requirements of EC Directive 8
Laser Safety 8
Additional Information 8
IPv6 Ready Logo 9
WEEE Directive / Rule 9
Information Security Standard (IEEE 2600) 9
Copyright 10
Third Party Software 10
The Software Subjected to the Other Conditions 10
Disclaimers 10
Legal Limitations on the Usage of Your Product and the Use of Images 11
Super G3 11

Important Safety Instructions 12

Installation 12
Power Supply 13
Handling 13
Maintenance and Inspections 16
Consumables 18
Other Warnings 18

Inspection of the Breaker 19

Checking the Breaker 19

Installation Location and Handling 21

Installation Precautions 21
Avoid Installing the Machine in the Following Locations 21
Select a Safe Power Supply 22
Moving the Machine 23
Provide Adequate Installation Space 23
Handling Precautions 25

Backing Up/Exporting Data 27

Parts and Their Functions 29
External View 29
When the Duplex Color Image Reader Unit-E1 and Cassette Feeding Unit-AD2 Are Attached 29
Internal View 31
When the Duplex Color Image Reader Unit-E1 and Cassette Feeding Unit-AD2 Are Attached 31
Control Panel Parts and Functions 32

Main Power and Energy Saver Key 33
How to Turn ON the Main Power 33
Energy Saver Key 34
Shutting Down the Machine 35

Specifications 36
Main Unit 36
Duplex Color Image Reader Unit-E1 38
Color Image Reader Unit-F1 38
Color Image Reader Unit-F2 39
Cassette Feeding Unit-AD2 40
Envelope Feeder Attachment-D1 40
Paper Deck Unit-B2 40
Staple Finisher-J1 41
Booklet Finisher-J1 42
External 2 Hole Puncher-B2/External 2/3 Hole Puncher-B2/External 2/4 Hole Puncher-B2 43
Inner Finisher-E1 44
Inner Finisher Additional Tray-A1 45
Inner 2 Way Tray-F1 45
Copy Tray-J1 45
Copy Card Reader-F1 46
Super G3 FAX Board-AE2 46
Send Function 47
Network Environment 48
Hardware Specifications 48
Software Specifications 48
Printer Settings 48
Software Specifications 48

Preface

Thank you for purchasing the Canon imageRUNNER ADVANCE C5255/C5250/C5240/C5235. Please read this manual thoroughly before operating the machine to familiarize yourself with its capabilities, and to make the most of its many functions. For information on the detailed settings for the functions described in this manual, see the e-Manual. After reading this manual, store it in a safe place for future reference.

How To Use This Manual

Symbols Used in This Manual

The following symbols are used in this manual to explain procedures, restrictions, handling precautions, and instructions that should be observed for safety.

WARNING	Indicates a warning concerning operations that may lead to death or injury to persons if not performed correctly. To use the machine safely, always pay attention to these warnings.
CAUTION	Indicates a caution concerning operations that may lead to injury to persons if not performed correctly. To use the machine safely, always pay attention to these cautions.
IMPORTANT	Indicates operational requirements and restrictions. Be sure to read these items carefully to operate the machine correctly, and avoid damage to the machine or property.
NOTE	Indicates a clarification of an operation, or contains additional explanations for a procedure. Reading these notes is highly recommended.
	Indicates an operation that must not be performed. Read these items carefully, and make sure not to perform the described operations.

Keys and Buttons Used in This Manual

The following symbols and key/button names are a few examples of how keys and buttons to be clicked or pressed are expressed in this manual:

- Touch Panel Display Keys: [Key Name]
  Example: [Cancel]
  [Close]
- Control Panel Keys: Key Icon (Key Name)
  Example: (Start)
  (Stop)
- Buttons on Computer Operation Screens: [Button Name]
  Example: [OK]
  [Add]

Illustrations Used in This Manual

Illustrations used in this manual are those displayed when the imageRUNNER ADVANCE C5255 has the following optional equipment attached to it: the Duplex Color Image Reader Unit-E1, Inner Finisher-E1, and Cassette Feeding Unit-AD2.

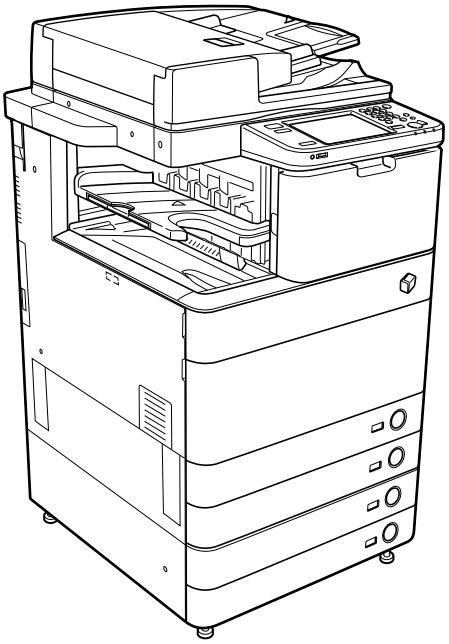

Abbreviations Used in This Manual

In this manual, product names and model names are abbreviated as follows:

Microsoft Windows 2000 operating system:	Windows 2000
Microsoft Windows Server 2003 operating system:	Windows Server 2003
Microsoft Windows Server 2003 R2 operating system:	Windows Server 2003 R2
Microsoft Windows XP operating system:	Windows XP
Microsoft Windows Vista operating system:	Windows Vista
Microsoft Windows Server 2008 operating system:	Windows Server 2008
Microsoft Windows 7 operating system:	Windows 7
Microsoft Windows Server 2008 R2 operating system:	Windows Server 2008 R2
Microsoft Windows operating system:	Windows
Microsoft Internet Explorer:	Internet Explorer
Microsoft Windows Internet Explorer:	Internet Explorer
Novell NetWare:	NetWare
Apple Macintosh:	Macintosh
Apple Mac:	Mac

Trademarks

MEAP and the MEAP logo are trademarks of Canon Inc.
This product contains the Universal Font Scaling Technology or UFST® under license from Monotype Imaging, Inc.. UFST® is a trademark of Monotype Imaging, Inc. registered in the United States Patent and Trademark Office and may be registered in certain jurisdictions.
Apple, AppleTalk, EtherTalk, LocalTalk, Mac, Macintosh, Mac OS, and Safari are trademarks of Apple Inc., registered in the U.S. and other countries.
Microsoft, Windows, Windows Vista, Windows Server, Internet Explorer, Excel and PowerPoint are either registered trademarks or trademarks of Microsoft Corporation in the United States and/or other countries.

Adobe® PostScript® 3™

Adobe, PostScript, and the PostScript logo are either registered trademarks or trademarks of Adobe Systems Incorporated in the United States and/or other countries.

Copyright © 2007 -08 Adobe Systems Incorporated. All rights reserved.
Protected by U.S. Patents 5,737,599; 5,781,785; 5,819,301; 5,929,866; 5,943,063; 6,073,148; 6,515,763; 6,639,593; 6,754,382; 7,046,403; 7,213,269; 7,242,415; Patents pending in the U.S. and other countries.
All instances of the name PostScript in the text are references to the PostScript language as defined by Adobe Systems Incorporated unless otherwise stated. The name PostScript also is used as a product trademark for Adobe Systems' implementation of the PostScript language interpreter.
Except as otherwise stated, any reference to a "PostScript printing device," "PostScript display device," or similar item refers to a printing device, display device or item (respectively) that contains PostScript technology created or licensed by Adobe Systems Incorporated and not to devices or items that purport to be merely compatible with the PostScript language.
Adobe, the Adobe logo, PostScript, the PostScript logo, and PostScript 3 are either registered trademarks or trademarks of Adobe Systems Incorporated in the United States and/or other countries.
Linux is a registered trademark of Linus Torvalds. Microsoft and Windows are either registered trademarks or trademarks of Microsoft Corporation in the United States and/or other countries.

All other trademarks are the property of their respective owners.

The PDF logo is a trademark or registered trademark of Adobe Systems Incorporated in the United States and other countries.

Copyright © 2008 Adobe Systems Incorporated. All rights reserved.
Protected by U.S. Patents 6,185,684; 6,205,549; 7,213,269; 7,272,628; 7,278,168; Patents pending in the U.S. and other countries.
All instances of the name PostScript in the text are references to the PostScript language as defined by Adobe Systems Incorporated unless otherwise stated. The name PostScript also is used as a product trademark for Adobe Systems' implementation of the PostScript language interpreter.
Except as otherwise stated, any reference to a "PostScript printing device," "PostScript display device," or similar item refers to a printing device, display device or item (respectively) that contains PostScript technology created or licensed by Adobe Systems Incorporated and not to devices or items that purport to be merely compatible with the PostScript language.
Adobe, the Adobe logo, PostScript, the PostScript Logo, and PostScript 3 are either registered trademarks or trademarks of Adobe Systems Incorporated in the United States and/or other countries.

All other trademarks are the property of their respective owners.

Other product and company names herein may be the trademarks of their respective owners.

Operations and Terms Used in This Manual

This machine makes effective use of memory to perform print operations efficiently. For example, as soon as the machine has scanned the original that you want to copy, it can immediately scan the next person's original. You can also print from this machine, using a function other than the Copy function. This machine combines multiple operations, so that not only copies, but various types of jobs are placed in a queue before being processed.
To avoid confusion when reading this manual, the terms "scanning," "printing," and "copying," used throughout this manual, are defined below. When making a copy, the process of scanning originals and printing copies may be described as separate functions.

Scanning

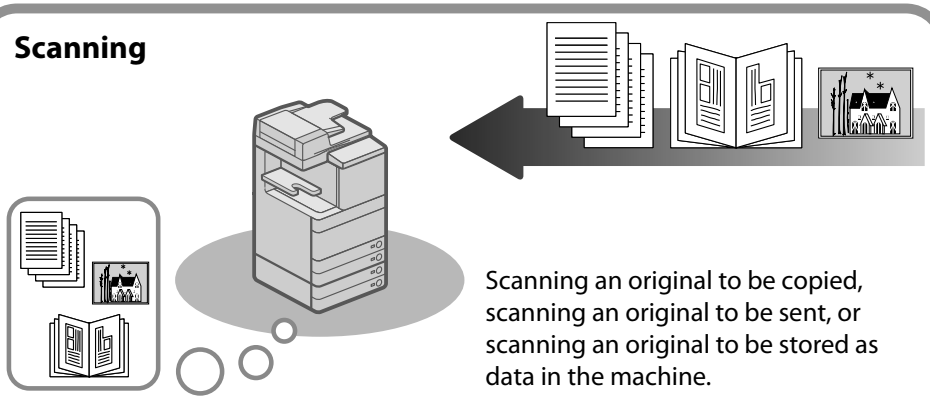

Scanning an original to be copied, scanning an original to be sent, or scanning an original to be stored as data in the machine.

Printing

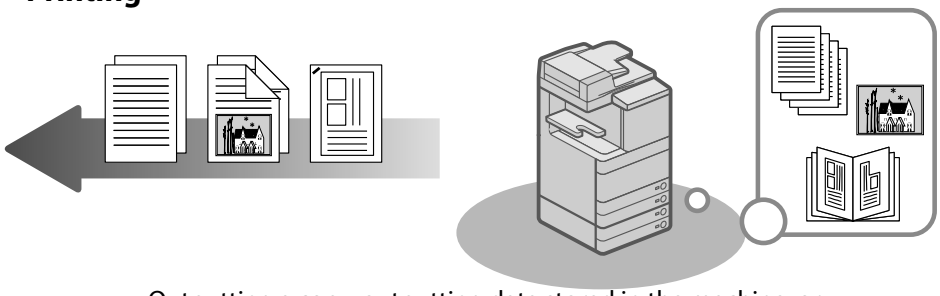

Outputting a copy, outputting data stored in the machine, or outputting data sent from a computer to the machine.

Copying

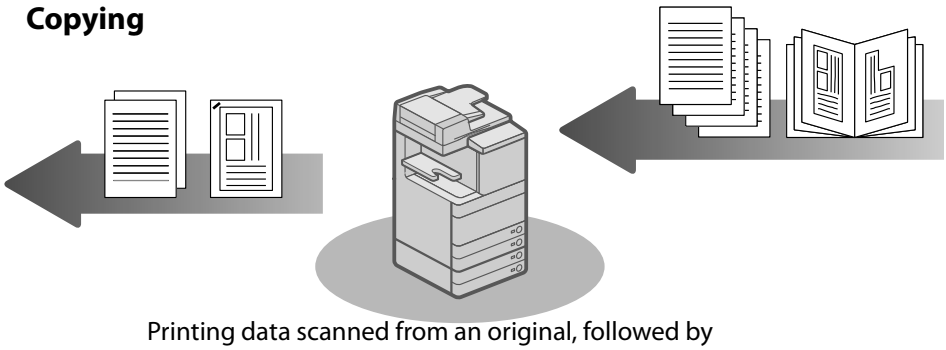

Printing data scanned from an original, followed by finishing options, such as stapling.

Legal Notices

Product Name

Safety regulations require the product's name to be registered. In some regions where this product is sold, the following name(s) in parenthesis may be registered instead.

- imageRUNNER ADVANCE C5255, imageRUNNER ADVANCE C5250 (F160400)
- imageRUNNER ADVANCE C5240, imageRUNNER ADVANCE C5235 (F160700)

EMC requirements of EC Directive

This equipment conforms with the essential EMC requirements of EC Directive. We declare that this product conforms with the EMC requirements of EC Directive at nominal mains input 230 V, 50 Hz although the rated input of the product is 220 to 240 V, 50/60 Hz. Use of shielded cable is necessary to comply with the technical EMC requirements of EC Directive.

Laser Safety

This Product is certified as a Class 1 laser product under IEC60825-1:2007 and EN60825-1:2007. This means that the product does not produce hazardous laser radiation.
Since radiation emitted inside the product is completely confined within protective housings and external covers, the laser beam cannot escape from the machine during any phase of user operation.
Do not remove protective housings or external covers, except as directed by the equipment's manual.

Additional Information

When servicing or adjusting the optical system of the product, be careful not to place screwdrivers or other shiny objects in the path of the laser beam. Also, accessories such as watches and rings should be removed before working on the product.
The reflected beam, even though visible or invisible, can permanently damage your eyes.
The label shown below is attached to the paper drawer's right cover and toner supply port cover.

This Product has been classified under IEC60825-1:2007 and EN60825-1:2007, which conform to the following classes;
CLASS 1 LASER PRODUCT
LASER KLASSE 1
APPAREIL Á LASER DE CLASSE 1
APPARECCHIO LASER DI CLASSE 1
PRODUCTO LÁSER DE CLASE 1
APARELHO A LASER DE CLASSE 1
LUOKAN 1 LASER-TUOTE
LASERPRODUKT KLASS 1

CAUTION

Use of controls, adjustments, or performance of procedures other than those specified in the manuals for this machine may result in hazardous radiation exposure.

IPv6 Ready Logo

The protocol stack included in this machine has obtained the IPv6 Ready Logo Phase-1 established by the IPv6 Forum.

WEEE Directive / Rule

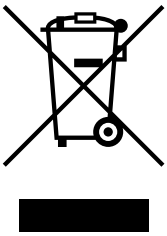

-European Union (and EEA) only-
This symbol attached on the product is according to the WEEE Directive (2002/96/EC).

-India only-
This product is not to be disposed of with your household waste, according to the e-waste (Management and Handling) Rules, 2011. This product should be handed over to a designated collection point, e.g., to an authorized collection site for recycling waste electrical and electronic equipment (EEE). Improper handling of this type of waste could have a possible negative impact on the environment and human health due to potentially hazardous substances that are generally associated with EEE. At the same time, your cooperation in the correct disposal of this product will contribute to the effective usage of natural resources. For more information regarding return and recycling of WEEE products, please visit <http://www.canon.co.in/environment>.
Also, this product complies with the "India E-waste Rule 2011" and prohibits use of lead, mercury, hexavalent chromium, polybrominated biphenyls or polybrominated diphenyl ethers in concentrations exceeding 0.1 % by weight and 0.01 % by weight for Cadmium, except for the exemptions set in Schedule II of the Rule.

Information Security Standard (IEEE 2600)

This machine is compliant with IEEE Std 2600™ - 2008 (hereinafter referred to as IEEE 2600), a global information security standard for multifunction peripherals and printers, and is able to achieve the security requirements defined in IEEE 2600.*
For information on how this machine meets the security requirements defined in IEEE 2600, see e-Manual > Security > IEEE 2600 Security Standard.
* IEEE 2600.1 CC Authentication has not been obtained for this machine by itself.

Copyright

Copyright 2013 by Canon Inc. All rights reserved.
No part of this publication may be reproduced or transmitted in any form or by any means, electronic or mechanical, including photocopying and recording, or by any information storage or retrieval system without the prior written permission of Canon Inc.
This product includes software and/or software modules that are licensed by Canon Inc. or its licensors from third parties. Use and distribution of this software and/or software modules are subject to conditions (a) through (d) below.

(a)

Copyright (C) 1999, 2000, 2002 Aladdin Enterprises. All rights reserved.

(b)

UFST: Copyright © 1989 - 1996, 1997, 2003, 2004, 2008, all rights reserved, by Monotype Imaging Inc.

(c)

Copyright © Unpublished Work of Novell, Inc. All Rights Reserved.

(d)

Portions of this software are copyright © 2007 The FreeType Project (www.freetype.org). All rights reserved.

Third Party Software

This product includes third-party software modules. Use and distribution of this software modules, including any updates of such software modules (collectively, the "SOFTWARE") are subject to conditions (1) through (9) below.

(1) You agree that you will comply with any applicable export control laws, restrictions or regulations of the countries involved in the event that this product including the SOFTWARE is shipped, transferred or exported into any country.
(2) Rights holders of the SOFTWARE retain in all respects the title, ownership and intellectual property rights in and to the SOFTWARE. Except as expressly provided herein, no license or right, expressed or implied, is hereby conveyed or granted by rights holders of the SOFTWARE to you for any intellectual property of rights holders of the SOFTWARE.
(3) You may use the SOFTWARE solely for use with the Canon product you purchased (the "PRODUCT").
(4) You may not assign, sublicense, market, distribute, or transfer the SOFTWARE to any third party without prior written consent of rights holders of the SOFTWARE.
(5) Notwithstanding the foregoing, you may transfer the SOFTWARE only when (a) you assign all of your rights to the PRODUCT and all rights and obligations under the conditions to transferee and (b) such transferee agrees to be bound by all these conditions.
(6) You may not decompile, reverse engineer, disassemble or otherwise reduce the code of the SOFTWARE to human readable form.
(7) You may not modify, adapt, translate, rent, lease or loan the SOFTWARE or create derivative works based on the SOFTWARE.
(8) You are not entitled to remove or make separate copies of the SOFTWARE from the PRODUCT.
(9) The human-readable portion (the source code) of the SOFTWARE is not licensed to you.

Notwithstanding (1) through (9) above, in case the other conditions accompany third-party software modules, these software modules are subject to the other conditions.

The Software Subjected to the Other Conditions

Please refer to eManual on a CD-ROM bundled with this product, for more detail and corresponding license conditions.

If you need source code of certain Software, under respective Licenses, used for this product, please send email with the following information in English or Japanese at: <oipossg@canon.co.jp>
- Name of the model that you purchased.
- Product ID number labeled on the back of the main unit.

Please refer to eManual on a CD-ROM bundled with this product, for more detail and corresponding license conditions.

Disclaimers

The information in this document is subject to change without notice.
CANON INC. MAKES NO WARRANTY OF ANY KIND WITH REGARD TO THIS MATERIAL, EITHER EXPRESS OR IMPLIED, EXCEPT AS PROVIDED HEREIN, INCLUDING WITHOUT LIMITATION, THEREOF, WARRANTIES AS TO MARKETABILITY, MERCHANTABILITY, FITNESS FOR A PARTICULAR PURPOSE OR USE, OR NON-INFRINGEMENT. CANON INC. SHALL NOT BE LIABLE FOR ANY DIRECT, INCIDENTAL, OR CONSEQUENTIAL DAMAGES OF ANY NATURE, OR LOSSES OR EXPENSES RESULTING FROM THE USE OF THIS MATERIAL.

Legal Limitations on the Usage of Your Product and the Use of Images

Using your product to scan, print or otherwise reproduce certain documents, and the use of such images as scanned, printed or otherwise reproduced by your product, may be prohibited by law and may result in criminal and/or civil liability. A non-exhaustive list of these documents is set forth below. This list is intended to be a guide only. If you are uncertain about the legality of using your product to scan, print or otherwise reproduce any particular document, and/or of the use of the images scanned, printed or otherwise reproduced, you should consult in advance with your legal advisor for guidance.

- Paper Money
- Money Orders
- Certificates of Deposit
- Postage Stamps (canceled or uncanceled)
- Identifying Badges or Insignias
- Selective Service or Draft Papers
- Checks or Drafts Issued by Governmental Agencies
- Motor Vehicle Licenses and Certificates of Title
- Travelers Checks
- Food Stamps
- Passports
- Immigration Papers
- Internal Revenue Stamps (canceled or uncanceled)
- Bonds or Other Certificates of Indebtedness
- Stock Certificates
- Copyrighted Works/Works of Art without Permission of Copyright Owner

To Avoid Unauthorized Use of the Machine

Unauthorized copies can be prevented by using the key switch unit to manage the operation of the imageRUNNER ADVANCE C5255/C5250/C5240/C5235. The use of this key should be strictly supervised to help prevent unauthorized copying.

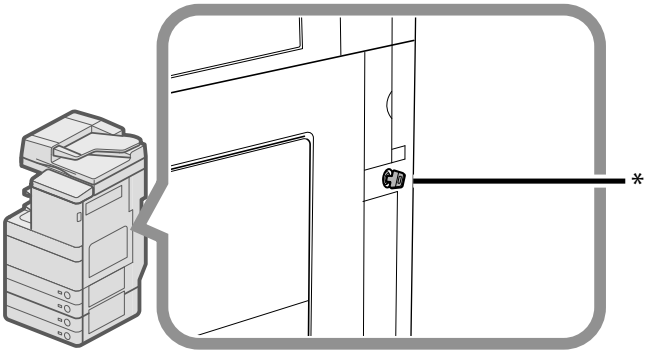

* Security Key
When using the machine, insert the security key into the key switch unit, and then turn it to the right.

Super G3

Super G3 is a phrase used to describe the new generation of fax machines that use ITU-T V.34 standard 33.6 Kbps* modems. Super G3 High Speed Fax machines allow transmission times of approximately 3 seconds* per page which results in reduced telephone line charges.

* Approximately 3 seconds per page fax transmission time based on CCITT/ITU-T No.1 Chart, (JBIG, Standard Mode) at 33.6 Kbps modem speed. The Public Switched Telephone Network (PSTN) currently supports 28.8 Kbps modem speeds or slower, depending on telephone line conditions.

NOTE

The fax function is available only if the FAX Board is installed.

Important Safety Instructions

Please read these "Important Safety Instructions" thoroughly before operating the machine. As these instructions are intended to prevent injury to the user or other persons or destruction of property, always pay attention to these instructions. Also, since it may result in unexpected accidents or injuries, do not perform any operation unless otherwise specified in the manual. Improper operation or use of this machine could result in personal injury and/or damage requiring extensive repair that may not be covered under your Limited Warranty.

Installation

WARNING

- **Never block the ventilation slots and louvers on the machine. These openings are provided for proper ventilation of working parts inside the machine. Blocking these openings can cause the machine to overheat. Never place the machine on a soft surface, such as a sofa or rug.**
- **Do not install the machine in the following locations:**
  - **A damp or dusty location**
  - **A location near water faucets or water**
  - **A location exposed to direct sunlight**
  - **A location subject to high temperatures**
  - **A location near open flames**
- **Do not install the machine near alcohol, paint thinner, or other flammable substances. If flammable substances come into contact with electrical parts inside the machine, it may result in a fire or electrical shock.**
- **Do not place the following items on the machine. If these items come into contact with a high-voltage area inside the machine, it may result in a fire or electrical shock.**
  If these items are dropped or spilled inside the machine, immediately turn OFF the main power switch, and disconnect the power cord from the power outlet. Then, contact your local authorized Canon dealer.
  - **Necklaces and other metal objects**
  - **Cups, vases, flowerpots, and other containers filled with water or liquids**

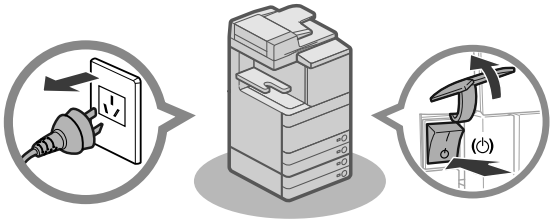

CAUTION

- **Do not install the machine in unstable locations, such as unsteady platforms or inclined floors, or in locations subject to excessive vibrations, as this may cause the machine to fall or tip over, resulting in personal injury.**
- **Do not remove the machine's leveling feet after the machine has been installed, as this may cause the machine to fall or tip over, resulting in personal injury.**

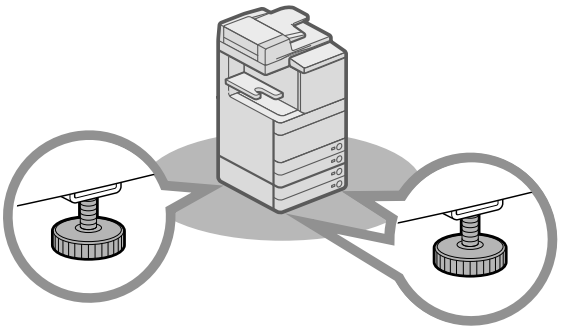

Power Supply

WARNING

- **Do not damage or modify the power cord. Also, do not place heavy objects on the power cord, or pull on or excessively bend it, as this could cause electrical damage and result in a fire or electrical shock.**
- **Keep the power cord away from a heat source; failure to do this may cause the power cord coating to melt, resulting in a fire or electrical shock.**
- **Do not connect or disconnect the power cord with wet hands, as this may result in electrical shock.**
- **Do not connect the power cord to a multiplug power strip, as this may cause a fire or electrical shock.**
- **Do not bundle up or tie the power cord in a knot, as this may result in a fire or electrical shock.**
- **Insert the power plug completely into the power outlet, as failure to do so may result in a fire or electrical shock.**
- **Do not use power cords other than the power cord provided, as this may result in a fire or electrical shock.**
- **As a general rule, do not use extension cords. Using an extension cord may result in a fire or electrical shock.**
- **Do not use power supplies with voltages other than those specified herein, as this may result in a fire or electrical shock.**
- **Always grasp the power plug when disconnecting the power cord. Pulling on the power cord may expose or snap the core wire, or otherwise damage the power cord. If the power cord is damaged, this could cause current to leak, resulting in a fire or electrical shock.**

IMPORTANT

Leave sufficient space around the power plug so that it can be unplugged easily. If objects are placed around the power plug, you will be unable to unplug it in an emergency.

Handling

WARNING

- **Do not attempt to disassemble or modify the machine. There are high-temperature and high-voltage components inside the machine which may result in a fire or electrical shock.**
- **If the machine makes strange noises, or gives off smoke, heat, or strange smells, immediately turn OFF the main power switch, and disconnect the power cord from the power outlet. Then, contact your local authorized Canon dealer. Continued use of the machine in this condition may result in a fire or electrical shock.**
- **Do not use highly flammable sprays near the machine. If gas from these sprays comes into contact with the electrical components inside the machine, it may result in a fire or electrical shock.**
- **To avoid damage to the power cord and creating a fire hazard, always turn OFF the main power switch, and unplug the interface cable when moving the machine. Otherwise, the power cord or interface cable may be damaged, resulting in a fire or electrical shock.**
- **Make sure that the power plug is firmly inserted into the power outlet if the machine was moved. Do not use the machine while the connection is loose, as doing so may cause a fire.**
- **Do not drop paper clips, staples, or other metal objects inside the machine. Also, do not spill water, liquids, or flammable substances (alcohol, benzene, paint thinner, etc.) inside the machine. If these items come into contact with a high-voltage area inside the machine, it may result in a fire or electrical shock. If these items are dropped or spilled inside the machine, immediately turn OFF the main power switch, and disconnect the power cord from the power outlet. Then, contact your local authorized Canon dealer.**
- **Do not use this product for uses other than as a color digital multitasking machine.**

⚠ CAUTION

- **Do not place heavy objects on the machine, as they may tip over or fall resulting in personal injury.**
- **Close the feeder/platen cover gently to avoid catching your hands, as this may result in personal injury.**

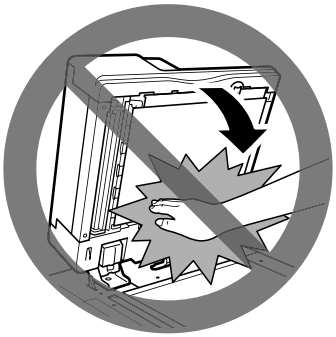

- **Do not press down hard on the feeder/platen cover when using the platen glass to make copies of thick books. Doing so may damage the platen glass and result in personal injury.**
- **Do not touch the finisher while the machine is printing, as this may result in personal injury.**
- **Paper that has just been output from the machine may be hot. Be careful when removing or aligning paper from the output tray. Touching paper right after it is output may result in low-temperature burns.**
- **Do not place your hands, hair, clothing, etc., near the exit and feed rollers. Even if the machine is not in operation, your hands, hair, or clothing may get caught in the rollers, which may result in personal injury or damage if the machine suddenly starts printing.**
- **Do not place your hands in the part of the tray where stapling is performed (near the rollers) when a finisher is attached, as this may result in personal injury.**

Staple Finisher-J1/Booklet Finisher-J1

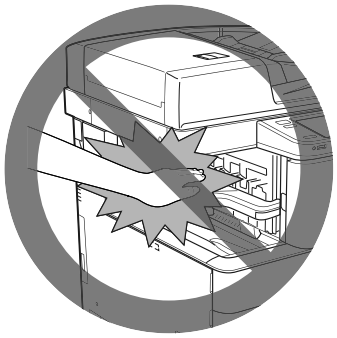

Inner Finisher-E1

- **Do not insert your hand into the machine while the paper drawer is removed, as this may result in personal injury.**

- **The laser beam can be harmful to human bodies. Since radiation emitted inside the product is completely confined within protective housings and external covers, the laser beam cannot escape from the machine during any phase of user operation. Read the following remarks and instructions for safety.**
  - **Never open covers other than those instructed in the manuals for this machine.**
  - **Do not remove the following caution label which is attached to the machine. If the label has been removed, contact your local authorized Canon dealer.**

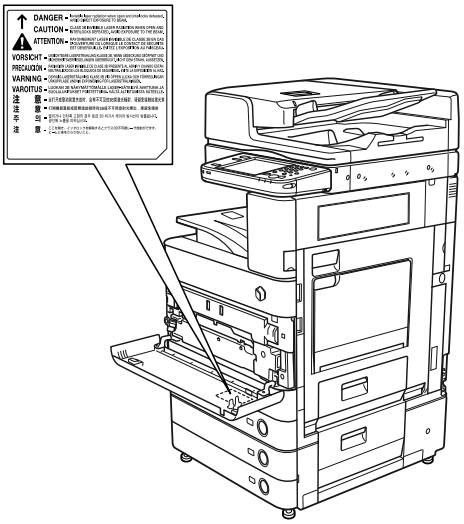

When the Duplex Color Image Reader Unit-E1 and Cassette Feeding Unit-AD2 are attached.

- **If the laser beam escapes from the machine, exposure may cause serious damage to your eyes.**
- **Controlling, adjusting, or operating the machine in ways not mentioned in the manuals for this machine may cause dangerous radiation to escape from the machine.**

IMPORTANT

Press (Energy Saver) for safety when the machine will not be used for a long period of time, such as overnight. Also, turn OFF the main power switch, and disconnect the power cord for safety when the machine will not be used for an extended period of time, such as during consecutive holidays.

Maintenance and Inspections

WARNING

- **When cleaning the machine, first turn OFF the main power switch, then disconnect the power cord. Failure to observe these steps may result in a fire or electrical shock.**
- **Disconnect the power cord from the power outlet regularly, and clean the area around the base of the power plug's metal pins and the power outlet with a dry cloth to ensure that all dust and grime is removed. If the power cord is connected for a long period of time in a damp, dusty, or smoky location, dust can build up around the power plug and become damp. This may cause a short circuit and result in a fire.**
- **Clean the machine using a slightly dampened cloth with a mild detergent mixed with water. Do not use alcohol, benzene, paint thinner, or other flammable substances. Check detergent for flammability prior to use. If flammable substances come into contact with a high-voltage area inside the machine, it may result in a fire or electrical shock.**
- **There are some areas inside the machine which are subject to high-voltages. When removing jammed paper or when inspecting the inside of the machine, do not allow necklaces, bracelets, or other metal objects to touch the inside of the machine, as this may result in burns or electrical shock.**
- **Do not burn or throw used toner cartridges into open flames, as this may cause the toner remaining inside the cartridges to ignite, resulting in burns or a fire.**
- **Make sure that the power plug is firmly inserted into the power outlet after cleaning the machine. Do not use the machine while the connection is loose, as doing so may cause a fire.**
- **Check the power cord and power plug regularly. If the following conditions occur, contact your local authorized Canon dealer, as the condition may cause a fire:**
  - **There are burn marks on the power plug.**
  - **The blade on the power plug is deformed or broken.**
  - **The power goes OFF and ON when the power cord is bent.**
  - **There are cuts, cracks, or indentations on the power cord.**
  - **A part of the power cord becomes hot.**
- **Check the power cord and power plug regularly to make sure that they are not handled in the following manner, as this may result in a fire or electrical shock:**
  - **The connection part of the power plug is loose.**
  - **Stress is being applied to the power cord by a heavy object or by affixing it with staples.**
  - **The power plug is loose.**
  - **The power cord is tied in a bundle.**
  - **The power cord protrudes into a walkway.**
  - **The power cord is in front of a heater.**

CAUTION

- **The fixing unit and its surroundings inside the machine may become hot during use. When removing jammed paper or when inspecting the inside of the machine, do not touch the fixing unit and its surroundings, as doing so may result in burns or electrical shock.**
- **When removing jammed paper or when inspecting the inside of the machine, do not expose yourself to the heat emitted from the fixing unit and its surroundings for a prolonged period of time. Doing so may result in low temperature burns, even though you did not touch the fixing unit and its surroundings directly.**
- **If a paper jam occurs, follow the directions on the touch panel display to remove any jammed paper from inside the machine. Do not insert your fingers into any parts not indicated on the touch panel display, as doing so may result in personal injury or burns.**

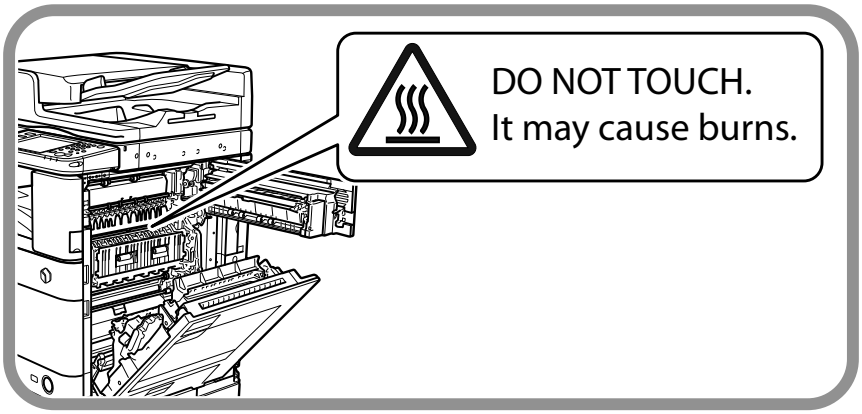

- **When removing jammed paper or replacing the toner cartridge, take care not to allow the toner to come into contact with your hands or clothing, as this will dirty your hands or clothing. If they become dirty, wash them immediately with cold water. Washing them with warm water will set the toner, and make it impossible to remove the toner stains.**
- **When removing paper which has become jammed inside the machine, remove the jammed paper gently to prevent the toner on the paper from scattering and getting into your eyes or mouth. If the toner gets into your eyes or mouth, wash them immediately with cold water and immediately consult a physician.**
- **When removing jammed originals or paper which has become jammed inside the machine, take care not to cut your hands or injure yourself on the edges of the originals or paper. If you cannot remove the paper, contact your local authorized Canon dealer.**
- **When removing a used toner cartridge, remove the cartridge carefully to prevent the toner from scattering and getting into your eyes or mouth. If the toner gets into your eyes or mouth, wash them immediately with cold water and immediately consult a physician.**
- **Do not dismantle the toner cartridge, as doing so may cause toner to fly out and enter your eyes or mouth. If toner gets into your eyes or mouth, wash them immediately with cold water and immediately consult a physician.**
- **If toner escapes from the toner cartridge, make sure not to ingest the toner or allow it to directly touch your skin. If toner touches your skin, wash it away with soap and water. If your skin still feels irritated after washing it, or you ingest toner, consult a doctor immediately.**

Consumables

WARNING

- **Do not burn or throw used toner cartridges into open flames, as this may cause the toner remaining inside the cartridges to ignite, resulting in burns or a fire.**
- **Do not store toner cartridges or copy paper in places exposed to open flames, as this may cause the toner or paper to ignite, resulting in burns or a fire.**
- **If you accidentally spill or scatter toner, carefully gather the toner particles together or wipe them up with a soft, damp cloth in a way that prevents inhalation. Never use a vacuum cleaner that does not have safeguards against dust explosions to clean up spilled toner. Doing so may cause a malfunction in the vacuum cleaner, or result in a dust explosion due to static discharge.**

CAUTION

- **Keep toner and other consumables out of the reach of small children. If these items are ingested, consult a physician immediately.**
- **Do not dismantle the toner cartridge, as doing so may cause toner to fly out and enter your eyes or mouth. If toner gets into your eyes or mouth, wash them immediately with cold water and immediately consult a physician.**
- **If toner escapes from the toner cartridge, make sure not to ingest the toner or allow it to directly touch your skin. If toner touches your skin, wash it away with soap and water. If your skin still feels irritated after washing it, or you ingest toner, consult a doctor immediately.**
- **When discarding used toner cartridges, put the cartridges into a bag to prevent the toner remaining inside the cartridges from scattering, and dispose of them in a location away from open flames.**

Other Warnings

WARNING

For cardiac pacemaker users:
This product emits low level magnetic flux. If you use a cardiac pacemaker and feel abnormalities, please move away from the product and consult your doctor.

Inspection of the Breaker

This machine has a breaker that detects excess current or leakage current. Make sure to test the breaker once a month using the following procedure.

IMPORTANT

- Make sure that the main power is turned OFF, before inspecting the breaker.
- If a malfunction occurs after an inspection, contact your local authorized Canon dealer.

Checking the Breaker

1 **Push the test button on the rear of the machine with the tip of a ball-point pen, or a similar object.**

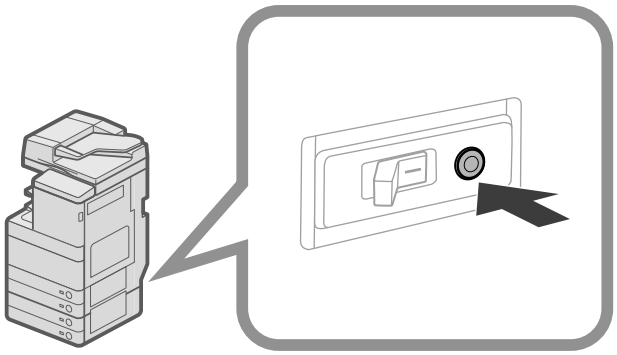

IMPORTANT

Briefly push the test button.

NOTE

- The breaker is located on the rear of the machine.
- For more information on the location of the breaker, see "External View," on p. 29.

2 Confirm that the breaker lever is switched to the OFF (" ◯ " side) position.

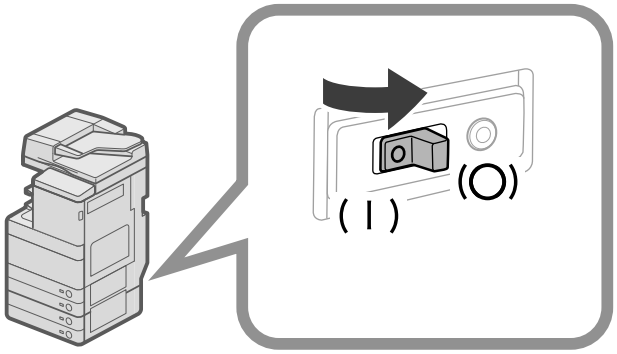

IMPORTANT

- Do not use the test button to turn the power ON and OFF.
- If the breaker lever does not switch to the OFF ("◯" side) position, repeat step 1.
- If the breaker lever does not switch to the OFF ("◯" side) position, despite carrying out the above procedure two or three times, contact your local authorized Canon dealer.

3 Switch the breaker lever to ON ("|" side).

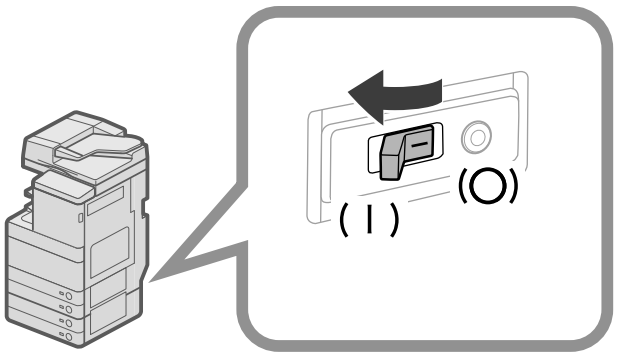

4 Turn ON the main power.

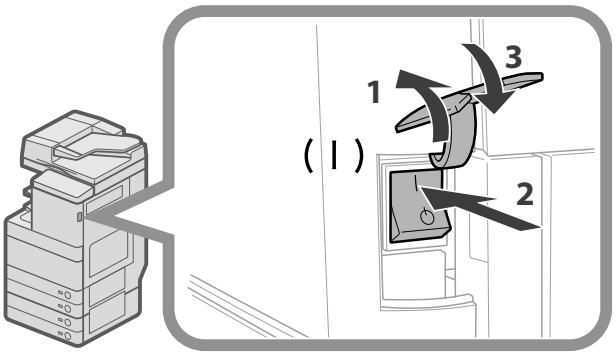

1. **Open the main power switch cover.**
2. **Press the main power switch to the "|" side.**
3. **Close the main power switch cover.**

Installation Location and Handling

This section describes precautions for installation location and handling. We recommend that you read this section prior to using this machine.

Installation Precautions

Avoid Installing the Machine in the Following Locations

- **Avoid locations subject to temperature and humidity extremes, whether low or high.**

  For example, avoid installing the machine near water faucets, hot water heaters, humidifiers, air conditioners, heaters, or stoves.

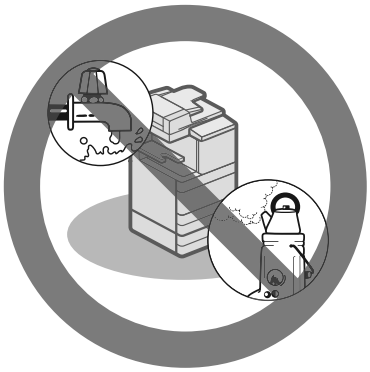

- **Avoid installing the machine in direct sunlight.**

  If this is unavoidable, use curtains to shade the machine. Be sure that the curtains do not block the machine's ventilation slots or louvers, or interfere with the electrical cord or power supply.

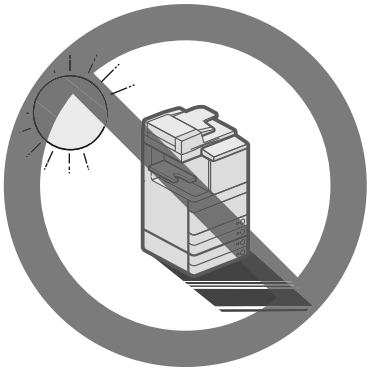

- **Avoid poorly ventilated locations.**

  This machine generates a slight amount of ozone etc. during normal use. Although sensitivity to ozone etc. may vary, this amount is not harmful. Ozone etc. may be more noticeable during extended use or long production runs, especially in poorly ventilated rooms. It is recommended that the room be appropriately ventilated, sufficient to maintain a comfortable working environment, in areas of machine operation.

- **Avoid locations where a considerable amount of dust accumulates.**
- **Avoid locations where ammonia gas is emitted.**

- **Avoid locations near volatile or flammable materials, such as alcohol or paint thinner.**

- **Avoid locations that are subject to vibration.**

  For example, avoid installing the machine on unstable floors or stands.

- **Avoid exposing the machine to rapid changes in temperature.**

  If the room in which the machine is installed is cold but rapidly heated, water droplets (condensation) may form inside the machine. This may result in a noticeable degradation in the quality of the copied image, the inability to properly scan an original, or the copies having no printed image at all.

- **Avoid installing the machine near computers or other precision electronic equipment.**

  Electrical interference and vibrations generated by the machine during printing can adversely affect the operation of such equipment.

- **Avoid installing the machine near televisions, radios, or similar electronic equipment.**

  The machine might interfere with sound and picture signal reception.
  Insert the power plug into a dedicated power outlet, and maintain as much space as possible between the machine and other electronic equipment.

- **Contact an authorized Canon dealer if communication is unavailable.**

  Depending on your locale or your telephone connection, you may be unable to perform data communication. In this case, contact your local authorized Canon dealer.

- **Do not remove the machine's leveling feet.**

  Do not remove the machine's leveling feet after the machine has been installed.
  If you put weight on the front of the machine while the drawers or units within the machine are pulled out, the machine may fall forward. To prevent this from happening, make sure that the machine's leveling feet are in place.

- **Avoid installing the machine at high altitudes of about 3,000 meters above sea level, or higher.**

  Machines with a hard disk may not operate properly when used at high altitudes of about 3,000 meters above sea level, or higher.

Select a Safe Power Supply

- **Plug the machine into a 220 - 240 V AC outlet.**
- **Make sure that the power supply for the machine is safe, and has a steady voltage.**
- **Do not connect other electrical equipment to the same power outlet to which the machine is connected.**
- **Do not connect the power cord to a multiplug power strip, as this may cause a fire or electrical shock.**
- **The power cord may become damaged if it is stepped on, affixed with staples, or if heavy objects are placed on it. Continued use of a damaged power cord can lead to an accident, such as a fire or electrical shock.**

- **The power cord should not be taut, as this may lead to a loose connection and cause overheating, which could result in a fire.**
- **If excessive stress is applied to the connection part of the power cord, it may damage the power cord or the wires inside the machine may disconnect. This could result in a fire. Avoid the following situations:**
  - Connecting and disconnecting the power cord frequently.
  - Tripping over the power cord.
  - The power cord is bent near the connection part, and continuous stress is being applied to the power outlet or the connection part.
  - Applying excessive force on the power plug.

Moving the Machine

- **If you intend to move the machine, even to a location on the same floor of your building, contact your local authorized Canon dealer beforehand. Do not attempt to move the machine yourself.**

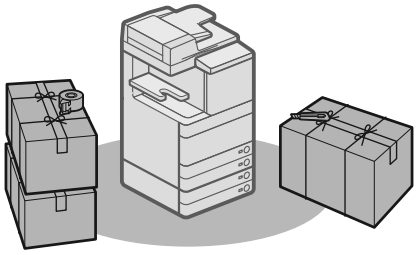

Provide Adequate Installation Space

Provide enough space on each side of the machine for unrestricted operation.
The following measures are for the imageRUNNER ADVANCE C5255.

- **When the Duplex Color Image Reader Unit-E1 is attached:**

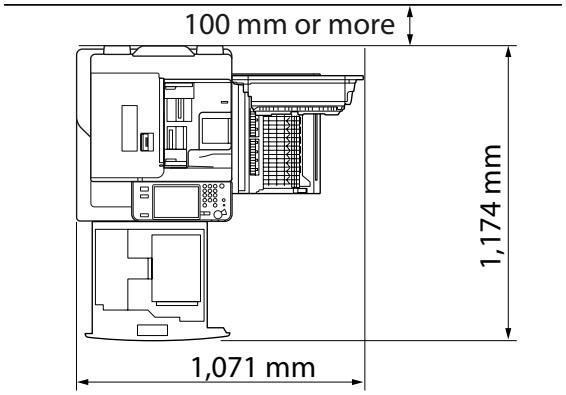

- **The Duplex Color Image Reader Unit-E1, Inner Finisher-E1, and Paper Deck Unit-B2 are attached:**

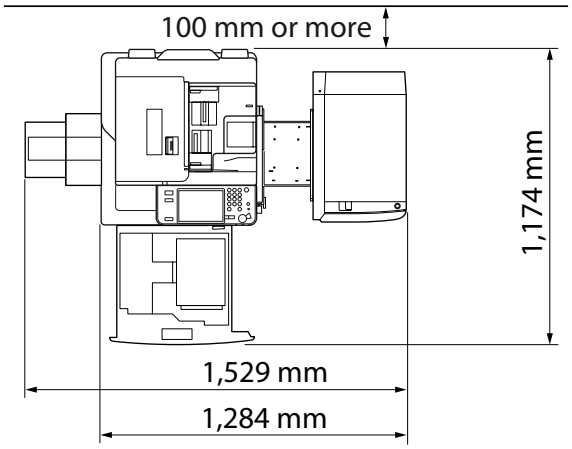

- **The Duplex Color Image Reader Unit-E1, Puncher, Booklet Finisher-J1, Buffer Pass Unit-G1, and Paper Deck Unit-B2 are attached:**

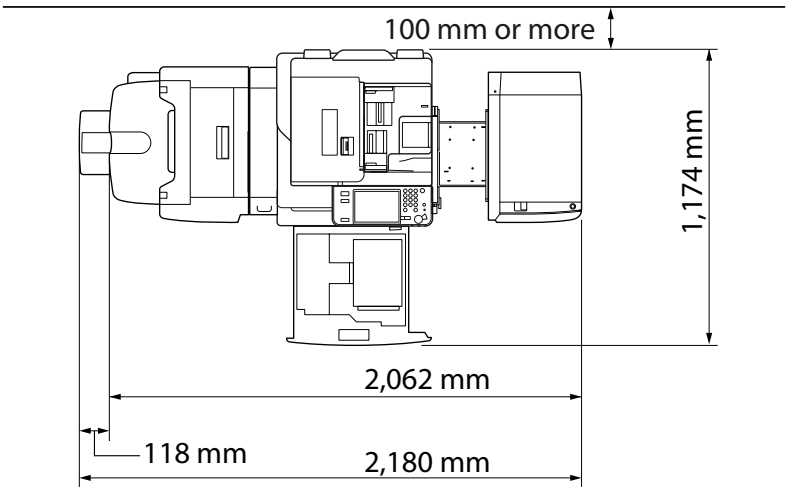

Handling Precautions

- **Do not attempt to disassemble or modify the machine.**

- **Some parts inside the machine are subject to high-voltages and temperatures. Take adequate precautions when inspecting the inside of the machine. Do not carry out any inspections that are not described in the manuals for this machine.**
- **Be careful not to spill liquid or drop any foreign objects, such as paper clips or staples inside the machine. If a foreign object comes into contact with electrical parts inside the machine, it might cause a short circuit and result in a fire or electrical shock.**

- **If there is smoke, or unusual noise, immediately turn the main power switch OFF, disconnect the power cord from the power outlet, and then call your local authorized Canon dealer. Using the machine in this state may cause a fire or electrical shock. Also, avoid placing objects around the power plug so that the machine can be disconnected whenever necessary.**

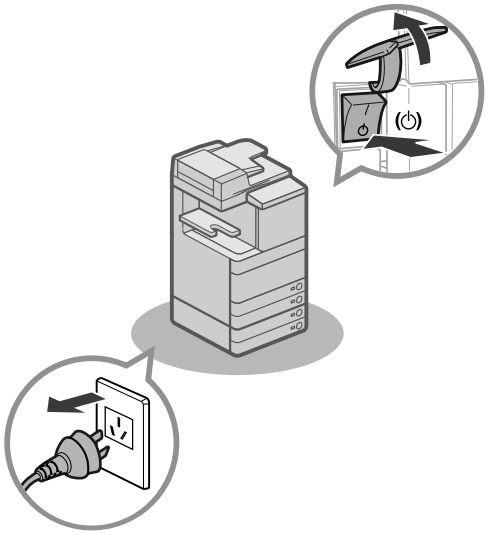

- **Do not turn the main power switch OFF or open the front covers while the machine is in operation. This may result in paper jams.**
- **Do not use flammable sprays, such as spray glue, near the machine. There is a danger of ignition.**

- This machine generates a slight amount of ozone etc. during normal use. Although sensitivity to ozone etc. may vary, this amount is not harmful. Ozone etc. may be more noticeable during extended use or long production runs, especially in poorly ventilated rooms. It is recommended that the room be appropriately ventilated, sufficient to maintain a comfortable working environment, in areas of machine operation.
- For safety reasons, press (Energy Saver) when it will not be used for a long period of time, such as overnight. As an added safety measure, turn OFF the main power switch, and disconnect the power cord when the machine will not be used for an extended period of time, such as during consecutive holidays.

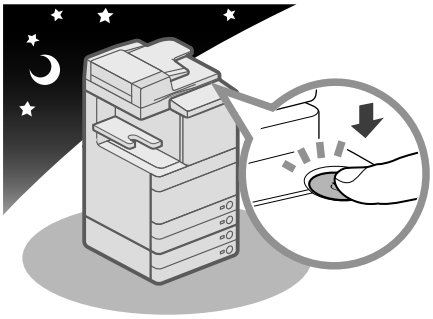

- Use a modular cable that is shorter than 3 meters.
- Use a USB cable that is shorter than 3 meters.
- Close the cover on the right side of the machine when using the machine. Continuing to use the machine with the cover open may cause damage to the machine.

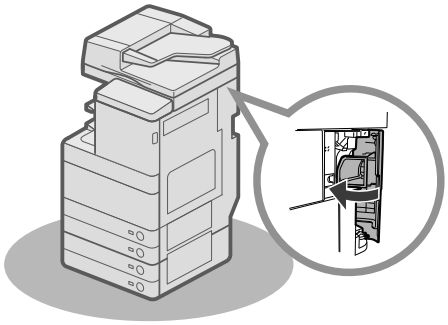

Backing Up/Exporting Data

Various data such as the received data, stored data, address book, and Settings/Registration settings are stored on the hard disk of the machine.
A malfunction in the hard disk may cause these data to be lost. Please regularly back up/export your important data.
Please note that Canon will not be held responsible for any damages caused by the loss of data.
You can backup/export data in the following ways:

- Backup/Restore
- Import/Export All
- Import/Export Individually

You can backup/export the following data:

Data You Can Backup/Restore

You can backup data in the machine and restore the data to the machine. The backed up data can only be restored to this machine.

Data	References
Mail Box Settings	e-Manual > Remote UI
Fax Inbox Settings	
Memory RX Inbox Settings	
Attribute information for Advanced Box documents	
Mail Box/Fax Inbox/Memory RX Inbox files*1	
Advanced Box files*2	
Form for Superimpose Image	

*1 You can also backup/restore data in another machine of the same model.
*2 You can also backup/restore data in another machine of the imageRUNNER ADVANCE series.

Data You Can Import/Export All

You can save/load multiple items at once. In addition, you can exchange data with this machine and other machines which support the Import/Export All function.

IMPORTANT

You cannot use the Import All function, depending on the recipient's machine model. For more information, contact your local authorized Canon dealer.

Data	References
Settings/Registration Basic Information	e-Manual > Remote UI
Paper Type Management Settings	
Forwarding Settings	
Box Settings	
Department ID Management Settings	
Main Menu Settings	
Web Access Settings	
Favorite Settings	
Address Book	
User Access Control for Advanced Box	
Quick Menu Settings	
MEAP Application Setting Information	
User Setting Information	

Data You Can Import/Export Individually

You can save/load data individually. In addition, you can exchange data with this machine and other machines which do not support the Import/Export All function.

Data	References
Address Lists	e-Manual > Remote UI
Device Settings (Forwarding Settings, Address Book, Send Function Favorite Settings)	
Settings/Registration	
Printer Settings	
Paper Information	
Web Access Favorites	e-Manual > Web Access

Other Data You Can Import/Export

You can exchange data with this machine and other machines which do not support the Import/Export All function.

Data		References
Quick Menu Information		e-Manual > Quick Menu
User information of the Advanced Box		e-Manual > Security
Data Relating to MEAP	License files for MEAP applications	e-Manual > MEAP
	Data saved from MEAP applications*1	Instruction manuals for each MEAP application
	User authentication information registered for the Local Device Authentication system of SSO-H (Single Sign-On H)	e-Manual > MEAP

*1 You may be able to back up data stored by MEAP applications, depending on the application.

NOTE

- By using the HDD Data Encryption & Mirroring Kit, you can store the same data on two hard disks connected to the machine and synchronize them. Even in this case, we recommend that you regularly back up/export your important data, as it is possible that a malfunction in both hard disks may cause the data to be lost.
- The passwords and PIN are backed up at the same time. However, some of the passwords may not be backed up, depending on the type of the password.
- If your machine is not connected to a network, it is recommended that you print and store important information such as the Address Book. (See e-Manual > Basic Operations.)

Parts and Their Functions

This section provides you with the names and functions of all the parts of the machine.
For more information on optional products, parts and their functions, see e-Manual > Optional Products/Software.

External View

When the Duplex Color Image Reader Unit-E1 and Cassette Feeding Unit-AD2 Are Attached

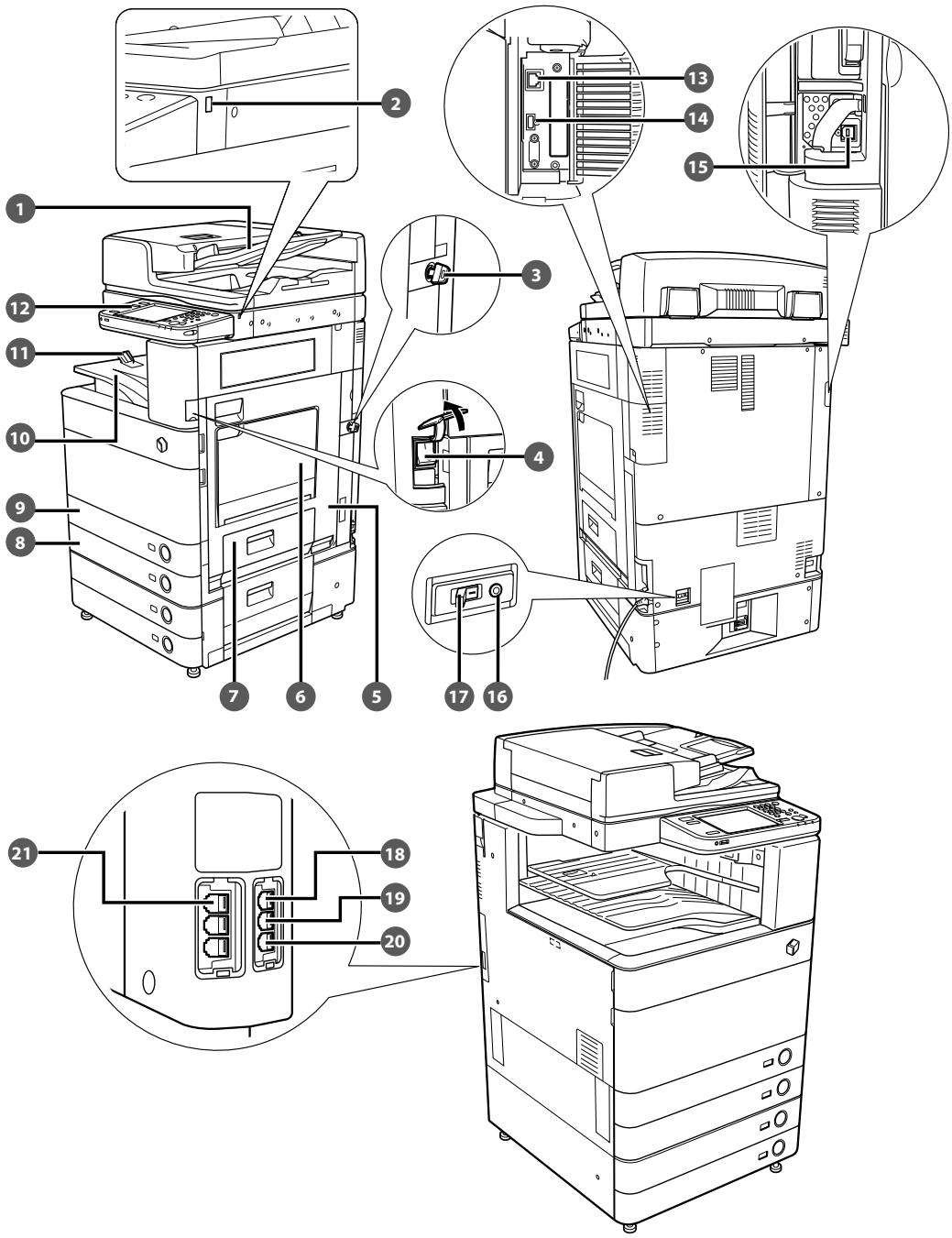

1 Feeder (Optional)
Originals placed in the feeder are fed one sheet at a time to the platen glass for scanning.

2 USB Port (1)
Use the USB port to connect a USB device.

3 Security Key (Optional)
For managing the use of the machine and preventing unauthorized copies.

4 Main Power Switch
Press to the "|" side to turn the power ON.

5 Main Unit's Right Cover
Open this cover when clearing a paper jam inside the main unit.

6 Multi-Purpose Tray
Use the multi-purpose tray to feed paper manually, and for loading nonstandard paper stock, such as envelopes.

7 Paper Drawer's Right Cover
Open this cover when clearing a paper jam in Paper Drawers 1 and 2.

8 Paper Drawer 2
Holds up to 550 sheets of paper (80 g/m^2).

9 Paper Drawer 1
Holds up to 550 sheets of paper (80 g/m^2).

10 Output Tray
Prints and copies are output to this tray.

11 Output Paper Tray Guide
Tilt the output paper tray guide up to prevent output papers from falling down.

12 Control Panel
Includes the keys, touch panel display, and indicators required for operating the machine.

13 LAN Port
Use a LAN cable to connect the machine to a network.

14 USB Port (2)
Use the USB port to connect external hard disks and other devices to the machine.

15 USB Connector
Use a USB cable to connect the machine to a computer.

16 Test Button
Press this button to test the circuit breaker.

17 Breaker
Detects excess current or leakage current.

18 LINE 4
Use this port to connect the Super G3 3rd/4th Line Fax Board to the machine.

19 LINE 3
Use this port to connect the Super G3 3rd/4th Line Fax Board to the machine.

20 LINE 2
Use this port to connect the Super G3 2nd Line Fax Board to the machine.

21 LINE 1
Use this port to connect a fax line to the machine.

NOTE

- The Super G3 3rd/4th Line Fax Board and Super G3 2nd Line Fax Board are optional products. For more information, see e-Manual > Optional Products/Software.
- For information on the optional products required to use the fax function, see e-Manual > Optional Products/Software.

Internal View

When the Duplex Color Image Reader Unit-E1 and Cassette Feeding Unit-AD2 Are Attached

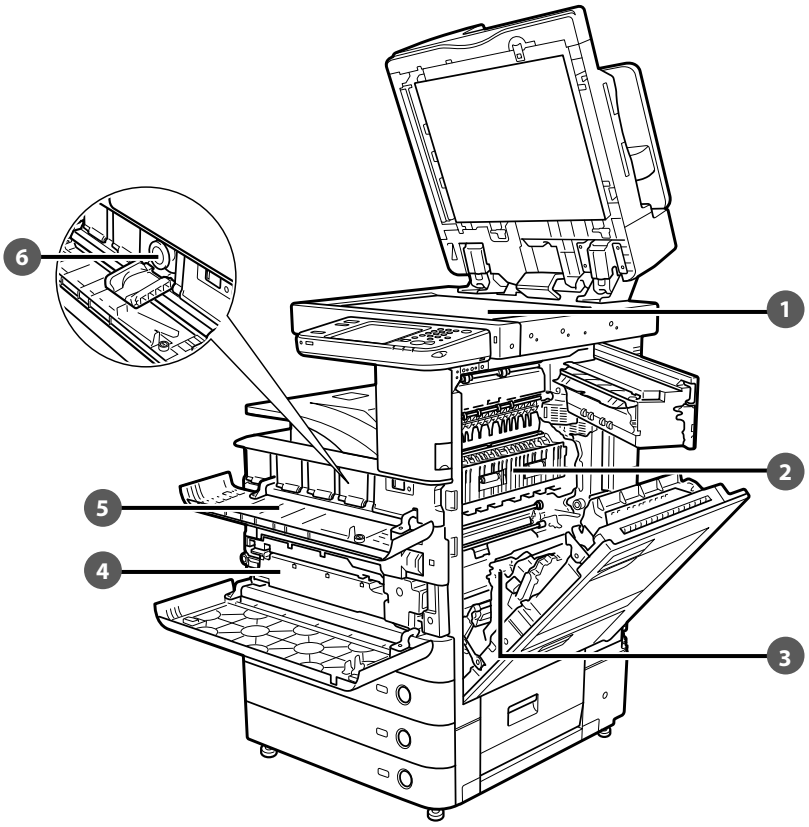

1 Platen Glass
Use the platen glass when scanning books, thick originals, thin originals, transparencies, etc.

2 Upper Cover of the Fixing Unit
Open this cover to clear a paper jam in the fixing unit.

3 Duplexing Unit
Pull out the duplexing unit to clear a paper jam.

4 Waste Toner Container
Waste toner accumulates here.

5 Toner Replacement Cover
Open this cover to replace the toner cartridge.

6 Toner Cartridge
When toner runs out, pull out the toner cartridge, and replace it with a new one.

Control Panel Parts and Functions

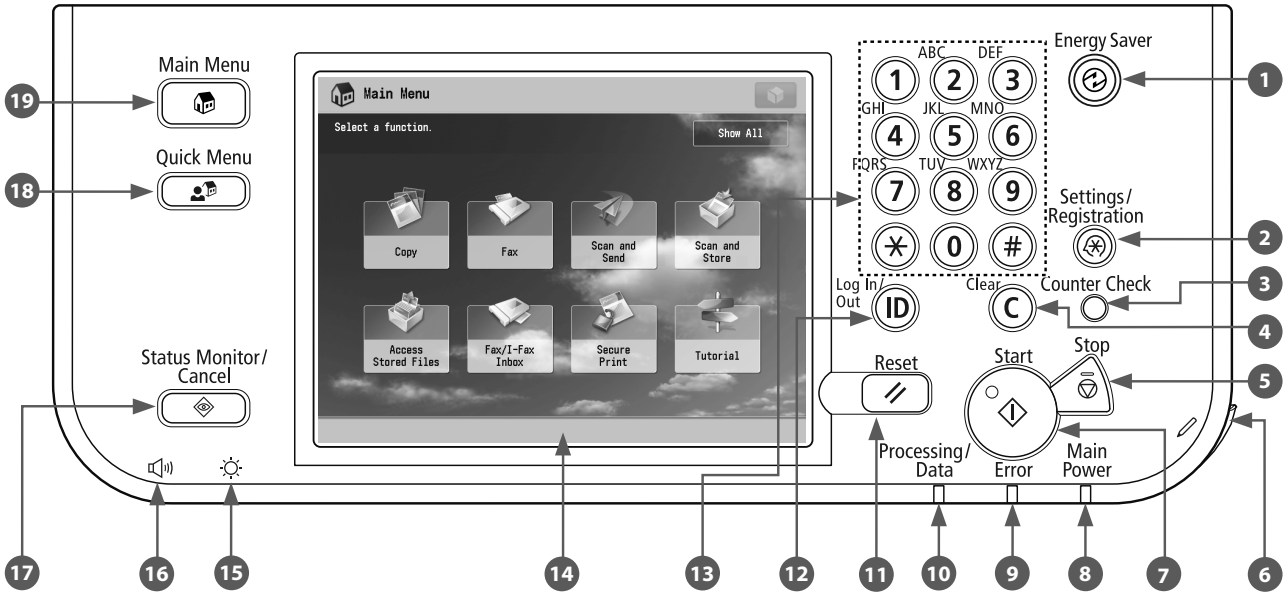

1 Energy Saver key
Press to set or cancel the Sleep mode. Lights when the machine enters the Sleep mode.

2 Settings/Registration key
Press to specify settings/registration.

3 Counter Check key
Press to display the copy and print count totals on the touch panel display.

4 Clear key
Press to clear entered values or characters.

5 Stop key
Press to stop a job in progress, such as a scan, copy, or fax (scanning only) job.

6 Edit Pen
Use when operating the touch panel display, such as to enter characters.

7 Start key
Press to start an operation.

8 Main Power Indicator
Lights when the main power is turned ON.

9 Error Indicator
Flashes or lights if there is an error in the machine.

10 Processing/Data Indicator
Flashes or blinks green when the machine is performing operations, and maintains a steady green light when fax data is stored in memory.

11 Reset key
Press to restore the standard settings of the machine.

12 ID (Log In/Out) key
Press to log in/out when a login service such as Department ID Management or SSO-H has been set.

13 Numeric keys
Press to enter numerical values.

14 Touch Panel Display
The settings screen for each function is shown on this display. Eight function keys are displayed by default.

15 Brightness Adjustment Dial
Use to adjust the brightness of the touch panel display.

16 Volume Settings key
Press to display the screen for adjusting settings, such as the transmission volume and fax sending/receiving alarm volume.

17 Status Monitor/Cancel key
Press to check the status of jobs or to cancel print jobs. Also, press to check status of the machine, such as checking the amount of paper remaining.

18 Quick Menu key
Press to retrieve favorite functions stored in Quick Menu. Also, if you are using authentication, Quick Menu set for each individual user can be displayed.

19 Main Menu key
Press to return to the Main Menu screen, such as when you want to switch functions.

Main Power and Energy Saver Key

This section describes how to use the main power switch and the Energy Saver key.

How to Turn ON the Main Power

This section explains how to turn ON the main power.

IMPORTANT

- If the main power indicator on the control panel does not light even though the main power switch is ON, be sure to check the breaker to see if it is OFF.
- If you want to turn OFF the main power and then back ON again, wait for at least 10 seconds after the main power indicator is turned OFF before turning ON the main power. However, when [Quick Startup Settings for Main Power] is enabled, if you don't wait more than 20 seconds after the main power indicator is turned OFF, quick startup is not performed.

NOTE

- The machine can receive and print documents from a personal computer when it is in the Sleep mode. I-fax and fax documents can also be received while the machine is in the Sleep mode.
- You can shut down the machine from the Remote UI using the Remote Shutdown mode. For more information, see e-Manual > Remote UI.

1 **Make sure that the power plug is firmly inserted into the power outlet.**

WARNING

Do not connect or disconnect the power cord with wet hands, as this may result in electrical shock.

2 **If the Security Key is inserted into the machine, make sure that it is in the ON positions (turn it to the right).**

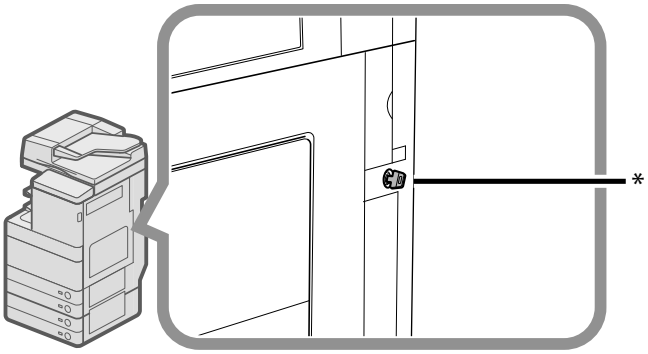

*** Security Key**

When using the machine, insert the security key into the main unit, and then turn it to the right.

3 Turn ON the main power.

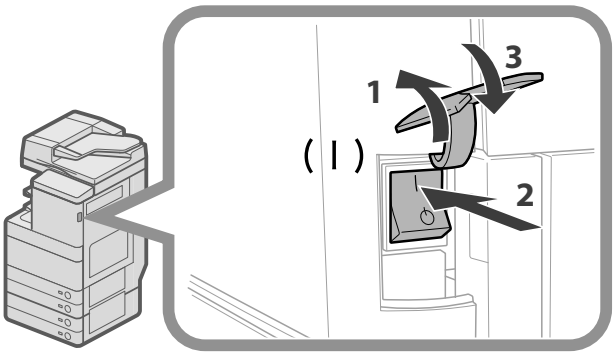

1. **Open the main power switch cover.**
2. **Press the main power switch to the "|" side.**
3. **Close the main power switch cover.**

The main power indicator on the control panel lights when you turn ON the main power switch.

Various screens appear when system software is loading.

If you are using a login service, log in using the procedure for the login service you are using.

NOTE

- You can change the default display that appears after the machine is turned ON from [Default Screen after Startup/Restoration] on the Settings/Registration screen. (See e-Manual > Settings/Registration.)
- If this machine is connected to a powered off Macintosh computer by USB cable, the computer may turn on automatically when this machine does. In this case, disconnect the USB cable from the machine. You may also be able to solve this problem by using a USB hub between the machine and the Macintosh.
- The response of the buttons and keys may not be optimal immediately after you turn ON the main power of the machine.
- If you set [Quick Startup Settings for Main Power] to 'On' in [Preferences] (Settings/Registration), the tone sounds when turning ON the main power of the machine. (Depending on the situations, the machine does not startup quickly and the tone does not sound.)
- Depending on the conditions under which the machine is being used, the machine may not startup quickly if you set [Quick Startup Settings for Main Power] to 'On'. For more information, see e-Manual > Settings/Registration.
- If you are using Department ID Management with the Copy Card Reader-F1, see e-Manual > Optional Products/Software.
- If you are using Department ID Management, see e-Manual > Basic Operations.
- If you are using SSO-H, see e-Manual > Basic Operations.

Energy Saver Key

If the machine is idle for a certain period of time, the machine will enter the Auto Sleep mode to minimize energy consumption. Press (Energy Saver) to cancel the Sleep mode and resume normal machine operations.

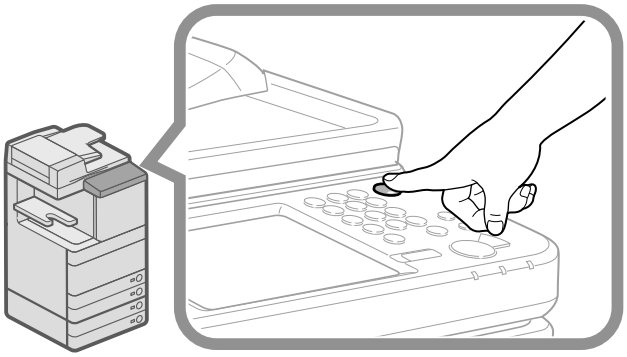

Shutting Down the Machine

This machine performs a procedure to protect the hard disk when the machine is shut down.
This enables the machine to be shut down safely, even if there are any jobs being processed, or a MEAP application is running while the machine is shutting down.

1 Turn OFF the main power.

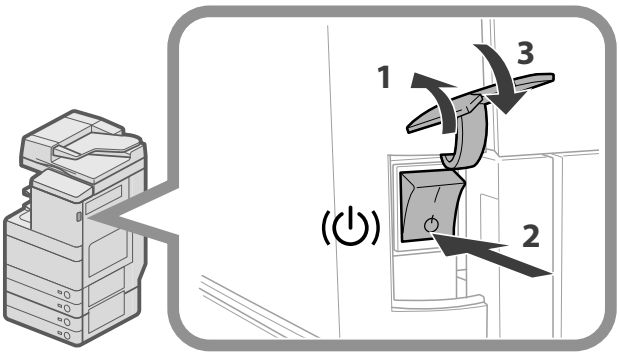

1. **Open the main power switch cover.**
2. **Press the main power switch to the "⏻" side.**
3. **Close the main power switch cover.**

IMPORTANT

- Do not turn the main power OFF while using the Fax/I-Fax function. Sending or receiving I-fax or fax documents cannot be done when the main power is turned OFF.
- If the message <Backing up stored data from the Remote UI...> is displayed on the touch panel display, do not turn the main power OFF. This may cause the machine cannot back up the stored data.
- Data stored in the machine may be damaged if the Advanced Box is accessed by another imageRUNNER ADVANCE machine or a computer immediately before the machine shuts down.
- The machine may take some time to completely shutdown. Do not unplug the power cord until the main power indicator of the machine is OFF.
- If the main power is turned OFF during scanning or printing, a paper jam may occur.

NOTE

If you set [Quick Startup Settings for Main Power] to 'On' in [Preferences] (Settings/Registration), the tone sounds when turning OFF the main power of the machine. (Depending on the situations, the machine does not startup quickly and the tone does not sound.)

Specifications

Specifications are subject to change without notice for product improvement or future release.

Main Unit

Item	Specifications
Name	Canon imageRUNNER ADVANCE C5255/C5250/C5240/C5235
Type	Reader-Printer Separated, Desktop
Color Supported	Full Color
Resolution for Writing	1,200 x 1,200 dpi
Available Paper	Paper Drawers: Weight: 52 to 220 g/m^2 Type: Thin (52 to 63 g/m^2), Plain 1 (64 to 81 g/m^2), Plain 2 (82 to 105 g/m^2), Recycled, Color, Pre-Punched, Bond, Heavy 1 (106 to 163 g/m^2), Heavy 2 (164 to 220 g/m^2), Transparency, Tab, Letterhead, and Envelopes Multi-Purpose Tray: Weight: 52 to 256 g/m^2 Type: Thin (52 to 63 g/m^2), Plain 1 (64 to 81 g/m^2), Plain 2 (82 to 105 g/m^2), Recycled, Color, Pre-Punched, Bond, Heavy 1 (106 to 163 g/m^2), Heavy 2 (164 to 220 g/m^2), Heavy 3 (221 to 256 g/m^2), Tracing, Coated, Labels, Transparency, Tab, Letterhead, and Envelopes
Paper Sizes	Paper Drawer 1: B4, A4, A4R, B5, B5R, A5R, and Custom size (139.7 mm x 182 mm to 304.8 mm x 390 mm) Paper Drawer 2: 305 mm x 457 mm, A3, B4, A4, A4R, B5, B5R, A5R, Custom size (139.7 mm x 182 mm to 304.8 mm x 457.2 mm), and Envelopes Multi-Purpose Tray: 305 mm x 457 mm, 320 mm x 450 mm (SRA3), A3, B4, A4, A4R, B5, B5R, A5, A5R, Custom size (99 mm x 139.7 mm to 320 mm x 457.2 mm), and Envelopes
Warm-Up Time	After Powering ON: 31 seconds If [Quick Startup Settings for Main Power] is set to 'On', it takes 7 seconds until the key operation on the touch panel display is available after turning ON the main power of the machine. Depending on the situations, the machine does not startup quickly. If the 2.5inch/1TB HDD is attached to the machine, the warm-up time becomes longer in the Quick Startup mode. Returning from the Sleep mode: imageRUNNER ADVANCE C5255/C5250: 18 seconds imageRUNNER ADVANCE C5240/C5235: 15 seconds * At a room temperature of 20°C in all above cases. * Activation time may vary, depending on the environment and conditions under which the machine is being used.
First Copy Time	Full Color: imageRUNNER ADVANCE C5255/C5250: 6.0 seconds imageRUNNER ADVANCE C5240/C5235: 8.1 seconds Black-and-White: imageRUNNER ADVANCE C5255/C5250: 3.9 seconds imageRUNNER ADVANCE C5240/C5235: 5.4 seconds

Item	Specifications
Copy Speed*1	1:1 (sheet/minute) imageRUNNER ADVANCE C5255 / imageRUNNER ADVANCE C5250 / imageRUNNER ADVANCE C5240 / imageRUNNER ADVANCE C5235 <Full Color> 305 mm x 457 mm: 20 / 20 / 15 / 15 A3: 26 / 26 / 18 / 18 B4: 26 / 26 / 18 / 18 A4: 51 / 45 / 35 / 30 A4R: 26 / 26 / 18 / 18 B5: 51 / 45 / 35 / 30 B5R: 10 / 10 / 10 / 10 A5R: 13 / 13 / 13 / 13 <Black-and-White> 305 mm x 457 mm: 20 / 20 / 15 / 15 A3: 28 / 28 / 20 / 20 B4: 28 / 28 / 20 / 20 A4: 55 / 50 / 40 / 35 A4R: 28 / 28 / 20 / 20 B5: 55 / 50 / 40 / 35 B5R: 10 / 10 / 10 / 10 A5R: 13 / 13 / 13 / 13 The copy speed may vary, depending on the settings for paper type, paper size, and the sending method. When continuously copying, adjustments for machine temperature or image quality may cause machine operations to pause or become slow. *1 Except when paper is fed from the multi-purpose tray.
Margin	Top: 4.0 mm Left and Right: 2.5 mm Bottom: 2.5 mm
Paper Feeding System/Capacity	Paper Drawers: 680 sheets (64 g/m^2), 550 sheets (80 g/m^2) Multi-Purpose Tray: 100 sheets (80 g/m^2)
Memory Capacity	Standard: 2 GB, Maximum: 2.5 GB
Hard Disk Capacity*	Standard: 160 GB (Used space: 160 GB) Maximum: 1 TB (Used space: 1 TB) * The hard disk capacity is subject to change in future release.
Power Source	220 - 240 V AC, 50/60 Hz, 8.7 A
Power Consumption	Maximum Power Consumption: imageRUNNER ADVANCE C5255/C5250: 1.8 kW imageRUNNER ADVANCE C5240/C5235: 1.5 kW When the machine is in the Sleep mode: 0.8 W When the main power switch is turned OFF: [Quick Startup Settings for Main Power] is set to 'Off ': 0.19 W [Quick Startup Settings for Main Power] is set to 'On': 0.45 W * The power consumption may vary, depending on the environment and conditions under which the machine is being used.
Dimensions (H x W x D)	Only the Main Unit: 800 mm x 620 mm x 700 mm With the Duplex Color Image Reader Unit-E1: 950 mm x 620 mm x 715 mm With the Color Image Reader Unit-F1: 931 mm x 620 mm x 712 mm With the Color Image Reader Unit-F2: 831 mm x 620 mm x 700 mm

Item	Specifications
Weight	Only the Main Unit: Approximately 139 kg With the Duplex Color Image Reader Unit-E1: Approximately 153 kg With the Color Image Reader Unit-F1: Approximately 148 kg With the Color Image Reader Unit-F2: Approximately 144 kg
Installation Space (W x D)	850 mm x 700 mm (when the multi-purpose tray is extended)

Duplex Color Image Reader Unit-E1

Item	Specifications
Original Feeding Mechanism	Automatic Document Feeder
Size and Weight of Originals	Size: A3, B4, A4, A4R, B5, B5R, A5, A5R, and B6R Weight: 1-sided scanning: 42 to 157 g/m^2 2-sided scanning: 50 to 157 g/m^2
Original Tray Capacity	150 sheets (80 g/m^2)
Original Scanning Speed	Copying: 1-sided scanning: 75 sheets/minute (A4 in Black-and-White at 600 dpi) 2-sided scanning: 37.5 sheets/minute (A4 in Black-and-White at 600 dpi) 1-sided scanning: 51 sheets/minute (A4 in Full Color at 600 dpi) 2-sided scanning: 25.5 sheets/minute (A4 in Full Color at 600 dpi) Scanning: 1-sided scanning: 75 sheets/minute (A4 in Black-and-White/Full Color at 300 dpi) 2-sided scanning: 60 sheets/minute (A4 in Black-and-White/Full Color at 300 dpi)
Resolution for Reading	600 x 600 dpi
Number of Tones	256
Acceptable Originals	Sheet, book, three dimensional objects (up to 2 kg)
Magnification	Regular paper size: Same Ratio 1:1 Reduction 1:0.86 (A3 → B4/A4 → B5) 1:0.81 (B4 → A4R/B5 → A5R) 1:0.70 (A3 → A4R/B4 → B5R) 1:0.61 (A3 → B5R) 1:0.50 (A3 → A5R) 1:0.25 Enlargement 1:1.15 (B4 → A3/B5 → A4) 1:1.22 (A4R → B4/A5 → B5) 1:1.41 (A4R → A3/B5R → B4) 1:2.00 (A5R → A3) 1:4.00 Copy Ratio: 25% to 400% (in 1% increments)
Multiple Copies	1 to 999 sheets
Power Source/Consumption	From the main unit/Approximately 120 W (feeder and reader)
Dimensions (H x W x D)	155 mm x 565 mm x 545 mm (feeder and reader)
Weight	Approximately 14.1 kg (feeder and reader)

Color Image Reader Unit-F1

Item	Specifications
Original Feeding Mechanism	Automatic Document Feeder
Size and Weight of Originals	Size: A3, B4, A4, A4R, B5, B5R, A5, A5R, and B6 Weight: 1-sided scanning: 42 to 157 g/m^2 2-sided scanning: 50 to 157 g/m^2

Item	Specifications
Original Tray Capacity	100 sheets (80 g/m^2)
Original Scanning Speed	Copying: 1-sided scanning: 46 sheets/minute (A4 in Black-and-White/Full Color at 600 dpi) Scanning: 1-sided scanning: 51 sheets/minute (A4 in Black-and-White/Full Color at 300 dpi)
Resolution for Reading	600 x 600 dpi
Number of Tones	256
Acceptable Originals	Sheet, book, three dimensional objects (up to 2 kg)
Magnification	Regular paper size: Same Ratio 1:1 Reduction 1:0.86 (A3 → B4/A4 → B5) 1:0.81 (B4 → A4R/B5 → A5R) 1:0.70 (A3 → A4R/B4 → B5R) 1:0.61 (A3 → B5R) 1:0.50 (A3 → A5R) 1:0.25 Enlargement 1:1.15 (B4 → A3/B5 → A4) 1:1.22 (A4R → B4/A5 → B5) 1:1.41 (A4R → A3/B5R → B4) 1:2.00 (A5R → A3) 1:4.00 Copy Ratio: 25% to 400% (in 1% increments)
Multiple Copies	1 to 999 sheets
Power Source/Consumption	From the main unit/Approximately 34 W (feeder and reader)
Dimensions (H x W x D)	138 mm x 565 mm x 540 mm (feeder and reader)
Weight	Approximately 7.9 kg (feeder and reader)

Color Image Reader Unit-F2

Item	Specifications
Resolution for Reading	600 x 600 dpi
Number of Tones	256
Acceptable Originals	Sheet, book, three dimensional objects (up to 2 kg)
Magnification	Regular paper size: Same Ratio 1:1 Reduction 1:0.86 (A3 → B4/A4 → B5) 1:0.81 (B4 → A4R/B5 → A5R) 1:0.70 (A3 → A4R/B4 → B5R) 1:0.61 (A3 → B5R) 1:0.50 (A3 → A5R) 1:0.25 Enlargement 1:1.15 (B4 → A3/B5 → A4) 1:1.22 (A4R → B4/A5 → B5) 1:1.41 (A4R → A3/B5R → B4) 1:2.00 (A5R → A3) 1:4.00 Copy Ratio: 25% to 400% (in 1% increments)
Multiple Copies	1 to 999 sheets
Power Source/Consumption	From the main unit/18 W
Dimensions (H x W x D)	Platen Cover: 36 mm x 565 mm x 511 mm Scanner (Platen Glass): 64 mm x 620 mm x 530 mm
Weight	Platen Cover: Approximately 1.8 kg Scanner: Approximately 8.3 kg

Cassette Feeding Unit-AD2

Item	Specifications
Paper Sizes	305 mm x 457 mm, A3, B4, A4, A4R, B5, B5R, A5R, and Custom size (139.7 mm x 182 mm to 304.8 mm x 457.2 mm)
Paper Drawers Capacity	550 sheets x 2 cassettes (80 g/m^2) 680 sheets x 2 cassettes (64 g/m^2)
Power Source/Maximum Power Consumption	From the main unit/Approximately 30 W
Dimensions (H x W x D)	251 mm x 620 mm x 700 mm
Weight	Approximately 24 kg

Envelope Feeder Attachment-D1

Item	Specifications
Acceptable Envelopes	No.10(COM10), Monarch, DL, and ISO-C5
Capacity	50 sheets (or 30 mm in height)
Feeding Speed	10 cpm
Dimensions (H x W x D)	81 mm x 439 mm x 307 mm
Weight	Approximately 1.2 kg

Paper Deck Unit-B2

Item	Specifications
Paper Size	A4
Paper Deck Capacity	3,000 sheets (64 g/m^2), 2,700 sheets (80 g/m^2)
Power Source/Consumption	From the main unit/Approximately 45 W
Dimensions (H x W x D)	473 mm x 372 mm x 603 mm
Weight	Approximately 37 kg
Installation Space Including the Main Unit (W x D)	992 mm x 700 mm

Staple Finisher-J1

Item	Specifications
Paper Size/Weight/Type	Size: 305 mm x 457 mm, 320 mm x 450 mm (SRA3), A3, B4, A4, A4R, B5, B5R, A5, A5R, Custom size (99 mm x 139.7 mm to 320 mm x 457.2 mm), and Envelopes Weight: 52 to 256 g/m^2 Type: Thin (52 to 63 g/m^2), Plain 1 (64 to 81 g/m^2), Plain 2 (82 to 105 g/m^2), Recycled, Color, Pre-Punched, Bond, Heavy 1 (106 to 163 g/m^2), Heavy 2 (164 to 220 g/m^2), Heavy 3 (221 to 256 g/m^2), Tracing, Coated, Labels, Transparency, Letterhead, and Envelopes
Capacity Per Tray (Upper Tray)	No finishing set, Collate, Group mode: A4, B5, A5, and A5R: 1,300 sheets (or 188 mm in height) A3, B4, A4R, and B5R: 650 sheets (or 96 mm in height) Collate + Offset, Group + Offset mode: A4 and B5: 1,300 sheets (or 188 mm in height) A3, B4, and A4R: 650 sheets (or 96 mm in height) Staple mode: A4 and B5: 1,300 sheets/30 sets (or 188 mm in height) A3, B4, and A4R: 650 sheets/30 sets (or 96 mm in height) No finishing set, Collate, Group mode with different paper sizes: 650 sheets (or 96 mm in height) Staple mode with different paper sizes: 650 sheets/30 sets (or 96 mm in height)
Capacity Per Tray (Lower Tray)	No finishing set, Collate, Group mode: A4, B5, A5, and A5R: 1,700 sheets (or 243 mm in height) A3, B4, A4R, and B5R: 650 sheets (or 96 mm in height) Collate + Offset, Group + Offset mode: A4 and B5: 1,700 sheets (or 243 mm in height) A3, B4, and A4R: 650 sheets (or 96 mm in height) Staple mode: A4 and B5: 1,700 sheets/30 sets (or 243 mm in height) A3, B4, and A4R: 650 sheets/30 sets (or 96 mm in height) No finishing set, Collate, Group mode with different paper sizes: 650 sheets (or 96 mm in height) Staple mode with different paper sizes: 650 sheets/30 sets (or 96 mm in height)
Max. Stapling Capacity/ Available Staple Size	A4 and B5: 50 sheets (52 to 81 g/m^2) 30 sheets (82 to 105 g/m^2) 2 sheets (106 to 256 g/m^2) A3, B4, and A4R: 30 sheets (52 to 81 g/m^2) 20 sheets (82 to 105 g/m^2) 2 sheets (106 to 256 g/m^2) Corner Staple/Double Staple mode: A3, B4, A4, A4R, and B5
Power Source/Maximum Power Consumption	From the main unit/Approximately 100 W
Dimensions (H x W x D)	1,097 mm x 677 mm x 646 mm (when the auxiliary tray is extended)
Weight	Approximately 46 kg
Installation Space Including the Main Unit (W x D)	1,527 mm x 700 mm (when the multi-purpose tray and the auxiliary tray are extended) 1,634 mm x 700 mm (when the optional External Puncher is attached, and the multi-purpose tray and the auxiliary tray are extended)

Booklet Finisher-J1

Item	Specifications
Paper Size/Weight/Type	Size: 305 mm x 457 mm, 320 mm x 450 mm (SRA3), A3, B4, A4, A4R, B5, B5R, A5, A5R, Custom size (99 mm x 139.7 mm to 320 mm x 457.2 mm), and Envelopes Weight: 52 to 256 g/m^2 Type: Thin (52 to 63 g/m^2), Plain 1 (64 to 81 g/m^2), Plain 2 (82 to 105 g/m^2), Recycled, Color, Pre-Punched, Bond, Heavy 1 (106 to 163 g/m^2), Heavy 2 (164 to 220 g/m^2), Heavy 3 (221 to 256 g/m^2), Tracing, Coated, Labels, Transparency, Letterhead, and Envelopes
Capacity Per Tray (Upper Tray)	No finishing set, Collate, Group mode: A4, B5, A5, and A5R: 1,300 sheets (or 188 mm in height) A3, B4, A4R, and B5R: 650 sheets (or 96 mm in height) Collate + Offset, Group + Offset mode: A4 and B5: 1,300 sheets (or 188 mm in height) A3, B4, and A4R: 650 sheets (or 96 mm in height) Staple mode: A4 and B5: 1,300 sheets/30 sets (or 188 mm in height) A3, B4, and A4R: 650 sheets/30 sets (or 96 mm in height) No finishing set, Collate, Group mode with different paper sizes: 650 sheets (or 96 mm in height) Staple mode with different paper sizes: 650 sheets/30 sets (or 96 mm in height)
Capacity Per Tray (Lower Tray)	No finishing set, Collate, Group mode: A4, B5, A5, and A5R: 1,700 sheets (or 243 mm in height) A3, B4, A4R, and B5R: 650 sheets (or 96 mm in height) Collate + Offset, Group + Offset mode: A4 and B5: 1,700 sheets (or 243 mm in height) A3, B4, and A4R: 650 sheets (or 96 mm in height) Staple mode: A4 and B5: 1,700 sheets/30 sets (or 243 mm in height) A3, B4, and A4R: 650 sheets/30 sets (or 96 mm in height) No finishing set, Collate, Group mode with different paper sizes: 650 sheets (or 96 mm in height) Staple mode with different paper sizes: 650 sheets/30 sets (or 96 mm in height)
Max. Stapling Capacity/ Available Staple Size	A4 and B5: 50 sheets (52 to 81 g/m^2) 30 sheets (82 to 105 g/m^2) 2 sheets (106 to 256 g/m^2) A3, B4, and A4R: 30 sheets (52 to 81 g/m^2) 20 sheets (82 to 105 g/m^2) 2 sheets (106 to 256 g/m^2) Corner Staple/Double Staple mode: A3, B4, A4, A4R, and B5

Item	Specifications
Max. Saddle Stitch Capacity/ Available Saddle Stitch Size	Saddle Stitch: 16 sheets (52 to 81 g/m^2) 10 sheets (82 to 105 g/m^2) Saddle Folding: 1 sheet (52 to 256 g/m^2) Size: A3, B4, and A4R
Power Source/Maximum Power Consumption	From the main unit/Approximately 123 W
Dimensions (H x W x D)	1,097 mm x 789 mm x 646 mm (when the auxiliary tray is extended)
Weight	Approximately 75 kg
Installation Space Including the Main Unit (W x D)	1,639 mm x 700 mm (when the multi-purpose tray and the auxiliary tray are extended) 1,746 mm x 700 mm (when the optional External Puncher is attached, and the multi-purpose tray and the auxiliary tray are extended)

External 2 Hole Puncher-B2/External 2/3 Hole Puncher-B2/ External 2/4 Hole Puncher-B2

Item	Specifications
Paper Size/Weight/Type	Size: External 2 Hole Puncher-B2: Two Holes: A3, B4, A4, A4R, B5, and B5R External 2/3 Hole Puncher-B2: Three Holes: A3 and A4 External 2/4 Hole Puncher-B2: Two Holes: A3, A4, and A4R Four Holes: A3 and A4 Weight: 52 to 256 g/m^2 Type: Thin (52 to 63 g/m^2), Plain 1 (64 to 81 g/m^2), Plain 2 (82 to 105 g/m^2), Recycled, Color, Bond, Heavy 1 (106 to 163 g/m^2), Heavy 2 (164 to 220 g/m^2), Heavy 3 (221 to 256 g/m^2), Coated, and Letterhead
Punch Hole Quantity, Hole Diameter	Two Holes: 6.5 mm (External 2 Hole Puncher-B2/External 2/4 Hole Puncher-B2) Three Holes: 8 mm (External 2/3 Hole Puncher-B2) Four Holes: 6.5 mm (External 2/4 Hole Puncher-B2)
Distance between Punch Holes	Two Holes: 80 mm (External 2 Hole Puncher-B2/External 2/4 Hole Puncher-B2) Three Holes: 108 mm (External 2/3 Hole Puncher-B2) Four Holes: 80 mm (External 2/4 Hole Puncher-B2)
Punch Waste Tray Capacity	Two Holes: 10,000 sheets (80 g/m^2) (External 2 Hole Puncher-B2/External 2/4 Hole Puncher-B2) Three Holes: 3,000 sheets (80 g/m^2) (External 2/3 Hole Puncher-B2) Four Holes: 5,000 sheets (80 g/m^2) (External 2/4 Hole Puncher-B2)
Power Source	From the main unit
Dimensions (H x W x D)	915 mm x 107 mm x 615 mm
Weight	Approximately 7.2 kg

Inner Finisher-E1

Item	Specifications
Paper Size/Weight/Type	Size: 305 mm x 457 mm, 320 mm x 450 mm (SRA3), A3, B4, A4, A4R, B5, B5R, A5, A5R, Custom size (99 mm × 139.7 mm to 320 mm × 457.2 mm), and Envelopes Weight: 52 to 256 g/m^2 Type: Thin (52 to 63 g/m^2), Plain 1 (64 to 81 g/m^2), Plain 2 (82 to 105 g/m^2), Recycled, Color, Pre-Punched, Bond, Heavy 1 (106 to 163 g/m^2), Heavy 2 (164 to 220 g/m^2), Heavy 3 (221 to 256 g/m^2), Tracing, Coated, Labels, Transparency, Letterhead, and Envelopes
Capacity Per Tray (Standard Tray)*	No finishing set, Collate, Group mode: 305 mm x 457 mm, 320 mm x 450 mm (SRA3), A3, B4, A4, A4R, B5, B5R, A5, and A5R: 500 sheets (or 62.5 mm in height) Collate + Offset, Group + Offset mode: 305 mm x 457 mm, 320 mm x 450 mm (SRA3), A3, B4, A4R, and B5R: 200 sheets (or 62.5 mm in height) A4, B5, A5, and A5R: 500 sheets (or 62.5 mm in height) Staple mode: A4 and B5: 30 sets (or 62.5 mm in height) A3, B4, and A4R: 30 sets (or 25 mm in height) No finishing set, Collate, Group mode with different paper sizes: 200 sheets (or 25 mm in height) Staple mode with different paper sizes: 30 sets (or 25 mm in height) * The number of sheets or sets which the tray can hold may vary, depending on the output settings.
Capacity Per Tray (Inner Finisher Additional Tray-A1)	No finishing set, Collate, Group, Collate + Offset, Group + Offset mode: 305 mm x 457 mm, 320 mm x 450 mm (SRA3), A3, B4, A4, A4R, B5, B5R, A5, and A5R: 100 sheets (or 12.5 mm in height) Staple mode: A3, B4, A4, A4R, and B5: 8.1 mm in height No finishing set, Collate, Group mode with different paper sizes: 100 sheets (or 12.5 mm in height) Staple mode with different paper sizes: 15 sets (or 8.1 mm in height)
Max. Stapling Capacity/ Available Staple Size	Corner Staple/Double Staple mode: A4 and B5: 50 sheets (52 to 81 g/m^2) 30 sheets (82 to 105 g/m^2) 2 sheets (106 to 256 g/m^2) A3, B4, and A4R: 30 sheets (52 to 81 g/m^2) 20 sheets (82 to 105 g/m^2) 2 sheets (106 to 256 g/m^2)
Power Source/Maximum Power Consumption	From the main unit/Approximately 40 W
Dimensions (H x W x D)	234 mm x 755 mm x 540 mm (when the auxiliary tray is extended)
Weight	Approximately 13 kg (when the Inner Finisher Additional Tray-A1 is attached)
Installation Space Including the Main Unit (W x D)	985 mm x 700 mm (when the multi-purpose tray and the auxiliary tray are extended)

Inner Finisher Additional Tray-A1

Item	Specifications
Paper Size/Weight/Type	See specifications of "Paper Size/Weight/Type" in Inner Finisher-E1.
Capacity Per Tray	See the specifications of "Capacity Per Tray (Inner Finisher Additional Tray-A1)" in Inner Finisher-E1.
Dimensions (H x W x D)	57 mm x 207 mm x 450 mm
Weight	Approximately 1.4 kg

Inner 2 Way Tray-F1

Item	Specifications
Paper Size/Weight/Type	Size: 305 mm x 457 mm, 320 mm x 450 mm (SRA3), A3, B4, A4, A4R, B5, B5R, A5, A5R, Custom size (99 mm x 139.7 mm to 320 mm x 457.2 mm), and Envelopes Weight: 52 to 256 g/m^2 Type: Thin (52 to 63 g/m^2), Plain 1 (64 to 81 g/m^2), Plain 2 (82 to 105 g/m^2), Recycled, Color, Pre-Punched, Bond, Heavy 1 (106 to 163 g/m^2), Heavy 2 (164 to 220 g/m^2), Heavy 3 (221 to 256 g/m^2), Tracing, Coated, Labels, Transparency, Tab, Letterhead, and Envelopes
Capacity	Tray A: 250 sheets* (80 g/m^2) Tray B: 100 sheets* (80 g/m^2) * When A4 or smaller size paper is used.
Dimensions (H x W x D)	76 mm x 426 mm x 407 mm
Weight	Approximately 0.6 kg
Installation Space Including the Main Unit (W x D)	850 mm x 700 mm (when the multi-purpose tray is extended)

Copy Tray-J1

Item	Specifications
Paper Size/Weight/Type	Size: A3, B4, A4, A4R, B5, B5R, and A5R Weight: 52 to 220 g/m^2 Type: Thin (52 to 63 g/m^2), Plain 1 (64 to 81 g/m^2), Plain 2 (82 to 105 g/m^2), Recycled, Color, Pre-Punched, Bond, Heavy 1 (106 to 163 g/m^2), Heavy 2 (164 to 220 g/m^2), Tab, and Letterhead
Capacity	100 sheets (80 g/m^2)
Dimensions (H x W x D)	124 mm x 365 mm x 373 mm (when the auxiliary tray is extended) 93 mm x 252 mm x 373 mm (when the auxiliary tray is not extended)
Weight	Approximately 0.5 kg
Installation Space Including the Main Unit (W x D)	967 mm x 700 mm (when the auxiliary tray is extended)

Copy Card Reader-F1

Item	Specifications
Available Cards	Magnetic
Card Readout Method	Magnetic readout
Magnetic Card Reading Direction	Face up
Store/Replay	Replay
Power Source	From the main unit
Dimensions (H x W x D)	40 mm x 88 mm x 96 mm (excluding the attachment kit and cable)
Weight	Approximately 200 g (including the attachment kit and cable)

Super G3 FAX Board-AE2

NOTE

Specifications remain the same even when the Super G3 2nd Line Fax Board or Super G3 3rd/4th Line Fax Board is installed.

Item	Specifications
Telephone Line Used*1	Public Switched Telephone Network
Scan line Density (Scan, Transmission)	Normal: 8 pels*2/mm x 3.85 line/mm Fine: 8 pels*2/mm x 7.7 line/mm Super-Fine: 8 pels*2/mm x 15.4 line/mm Ultra-Fine: 16 pels*2/mm x 15.4 line/mm
Transmission Speed	Super G3: 33.6 kbps, G3: 14.4 kbps
Compression Method	MH, MR, MMR, JBIG
Transmission Type	Super G3, G3
Sending Original Sizes	A3, B4, A4, A4R, B5*3, B5R*4, A5*4, A5R*4
Receiving Paper Sizes	A3, B4, A4, A4R, B5, B5R, A5, A5R
Transmission Times	JBIG: Approximately 2.6 seconds
Auto Dial Function	Address Book: 1,800 destinations (including destinations stored in one-touch buttons)
Image Memory	Approximately 6,000 pages

*1 When using an IP telephone service, facsimile communication may not be performed normally via an IP telephone line. It is recommended to use facsimile communication via a general telephone (Public Switched Telephone Network) line.
*2 Pels stands for picture elements (pixels).
*3 Sent as B4.
*4 Sent as A4.

Send Function

Scan Features

Item	Specifications	
Communication Protocol	FTP (TCP/IP), SMB (TCP/IP), WebDAV	
Data Format	TIFF, JPEG, PDF, XPS, OOXML (PowerPoint/Word)	
Resolution	100 x 100 dpi, 150 x 150 dpi, 200 x 100 dpi, 200 x 200 dpi, 200 x 400 dpi, 300 x 300 dpi, 400 x 400 dpi, 600 x 600 dpi	
System Environment	Windows 2000 Server SP4, Windows XP Professional SP3, Windows Server 2003 R2 SP2, Windows Vista SP2, Windows Server 2008 SP2, Windows Server 2008 R2 SP2, Windows 7, Solaris 10, Mac OS X 10.4.x/10.5.x/10.6.x, Red Hat Linux 9	
Interface	1000BASE-T, 100BASE-TX, 10BASE-T	
Color Mode	Automatic-Color Select (Full Color/Grayscale), Automatic-Color Select (Full Color/Black-and-White), Full Color, Grayscale, Black-and-White	
Original Type	Text, Text/Photo, Photo	
Other	Preview, Browse Windows (SMB) File Server	
Optional PDF/XPS/OOXML Functions	PDF	Compact, Trace and Smooth, Encryption, OCR, Device Signature, User Signature, Optimization for Web*1, PDF/A-1b, Reader Extensions
	XPS	Compact, OCR, Device Signature, User Signature
	OOXML	PowerPoint, Word, OCR

*1 PDF files optimized for Web viewing.

E-Mail and I-Fax Features

Item	Specifications	
Communication Protocol	SMTP, POP3	
I-Fax Communication Mode	Simple, Full	
Resolution	For Sending E-mail	100 x 100 dpi, 150 x 150 dpi, 200 x 100 dpi, 200 x 200 dpi, 200 x 400 dpi, 300 x 300 dpi, 400 x 400 dpi, 600 x 600 dpi
	For Sending I-Fax (Black-and-White)	200 x 100 dpi, 200 x 200 dpi, 200 x 400 dpi*1, 300 x 300 dpi*1, 400 x 400 dpi*1, 600 x 600 dpi*1
	For Sending I-Fax (Color)	100 x 100 dpi*1, 200 x 200 dpi*1, 300 x 300 dpi*1, 400 x 400 dpi*1, 600 x 600 dpi*1
Format	E-mail	TIFF, JPEG, PDF, XPS, OOXML (PowerPoint/Word)
	I-Fax (Black-and-White)	TIFF (MH, MR*1, MMR*1)
	I-Fax (Color)	TIFF (Profile-C)*1
Original Size	E-mail	A3, B4, A4, A4R, B5, B5R, A5, A5R
	I-Fax	A3, B4, A4, A4R, B5*2, B5R*3, A5*3, A5R*3
Server Software	Microsoft Exchange 2003 SP2, Microsoft Exchange 2007 SP2, Sendmail 8.14.4, Lotus Domino R7.0	
Other	Searches a destination via the LDAP Server, Preview	
Optional PDF/XPS/OOXML Functions (E-mail only)	PDF	Compact, Trace and Smooth, Encryption, OCR, Device Signature, User Signature, Optimization for Web*4, PDF/A-1b, Reader Extensions
	XPS	Compact, OCR, Device Signature, User Signature
	OOXML	PowerPoint, Word, OCR

*1 Available after setting RX conditions of the destination.
*2 Sent as B4.
*3 Sent as A4.
*4 PDF files optimized for Web viewing.

Network Environment

Hardware Specifications

Network Interface	10Base-T/100Base-TX/1000Base-T (RJ-45)

Software Specifications

Protocol Supported		
TCP/IP	Frame type:	Ethernet II
	Print application:	LPD/Raw/IPP/IPPS/FTP/WSD
IPX/SPX	Frame type:	Ethernet II/Ethernet 802.2/Ethernet 802.3/Ethernet SNAP/Auto Detect
	Print application:	Bindery PServer/NDS PServer/RPrinter/NPrinter
AppleTalk	Frame type:	Ethernet SNAP
	Print application:	PAP (Printer Access Protocol)

Printer Settings

Software Specifications

Command Language	PCL5c, PCL6, PostScript 3	
Resident Fonts	PCL:	93 Scalable fonts, 2 OCR fonts, and 10 Bitmap fonts Andale Font* (Japanese, Korean, Simplified Chinese, Traditional Chinese)
	PS:	136 Scalable fonts
Printable Area	PCL5c, PCL6:	Reduced to 4.23 mm from the top, bottom, left, and right edges of the paper.
	PostScript 3:	Reduced to 4 mm from the top, bottom, left, and right edges of the paper.

* The optional PCL International Font Set needs to be activated to use Andale® and WorldType® Collection, or Andale Mono WT.

CANON INC.
30-2, Shimomaruko 3-chome, Ohta-ku, Tokyo 146-8501, Japan
CANON U.S.A., INC.
One Canon Park, Melville, NY 11747, U.S.A.
CANON CANADA INC.
6390 Dixie Road Mississauga, Ontario L5T 1P7, Canada
CANON EUROPA N.V.
Bovenkerkerweg 59, 1185 XB Amstelveen, The Netherlands
(See http://www.canon-europe.com/ for details on your regional dealer)
CANON LATIN AMERICA, INC.
703 Waterford Way Suite 400 Miami, Florida 33126 U.S.A.
CANON AUSTRALIA PTY. LTD
1 Thomas Holt Drive, North Ryde, Sydney, N.S.W. 2113, Australia
CANON CHINA CO., LTD
15F Jinbao Building No.89 Jinbao Street, Dongcheng District, Beijing 100005, China
CANON SINGAPORE PTE. LTD.
1 HarbourFront Avenue #04-01 Keppel Bay Tower, Singapore 098632
CANON HONGKONG CO., LTD
19/F., The Metropolis Tower, 10 Metropolis Drive, Hunghom, Kowloon, Hong Kong

FT5-4256 (020) XXXXXXXXXX © CANON INC. 2013 PRINTED IN CHINA