Canon

Starter Guide

imageRUNNER ADVANCE C350i / C250i

Read this guide first.

Please read this guide before operating this product. After you finish reading the guide, store it in a safe place for future reference.

Manuals for the Machine

The manuals for this machine are divided as follows. Please refer to them for detailed information.

Guides with this symbol are printed manuals.

Guides with this symbol are included on the accompanying CD-ROM.

Starter Guide (This Manual)

- Describes the precautions for using the machine.
- Describes how to open and install the machine.
- Describes the maintenance and troubleshooting procedures for the machine.
- Includes the specifications of the machine.

Quick Operation Guide

- Describes the basic operations for using the machine.
- When you do not understand how to use one of the machine's operations, you can quickly check it here.

e-Manual (HTML Manual)

- Describes all the functions of the machine. Also provided with a search function that is useful for finding and checking information.
- Includes "Practical Workflows," which introduces flows of practical operations using functions of the machine.

Driver Installation Guide

- Provides instructions on installing the printer, fax, and other drivers.

Windows:
- Printer Driver Installation Guide
- Fax Driver Installation Guide
- Color Network ScanGear 2 Installation Guide

Mac OS:
- Canon Printer Driver Guide
- Canon Fax Driver Guide

- Included on the same CD-ROM as each driver.

The CD-ROM/DVD-ROM provided for this product may include manuals in PDF format. If you do not have access to Adobe Reader to view the manuals in PDF format, try other programs such as PDF Preview developed by Vivid Document Imaging Technologies.

How to Use the e-Manual

How to Install the e-Manual

Windows

1. Insert the e-Manual CD-ROM in your computer.
2. Select the language for the e-Manual → click [Next].
   If you select [Display], the e-Manual is displayed without installation.
3. Read the License Agreement, and then click [Yes].
4. Select [Install].

NOTE

If the shortcut icon created on the Desktop or the [index.html] file is double-clicked, the e-Manual is displayed.

Macintosh

1. Insert the e-Manual CD-ROM into your computer.
2. Drag-and-drop the [iRADV_C350i Manual_ene] folder to the location you want to save the e-Manual.
3. Double-click the [index.html] file inside the [iRADV_C350i Manual_ene] folder to display the e-Manual.

NOTE

Depending on the operating system you are using, a security protection message may appear. In this case, allow the content to be displayed.

If the e-Manual (CD-ROM) Does Not Start

The CD-ROM auto run function may be disabled. In this case, you must perform the following procedure.

Windows XP/Server 2003

1. Click [Start] on the taskbar → click [My Computer].
2. Double-click the e-Manual icon.
3. Double-click [Maninst.exe].

Windows Vista/7/Server 2008

1. Click [Start] on the taskbar → click [Computer].
2. Double-click the e-Manual icon.
3. Double-click [Maninst.exe].

Windows 8/Server 2012

1. Display the desktop → click the explorer icon on the taskbar.
2. Click [Computer].
3. Double-click the e-Manual icon.
4. Double-click [Maninst.exe].

Top Page of the e-Manual

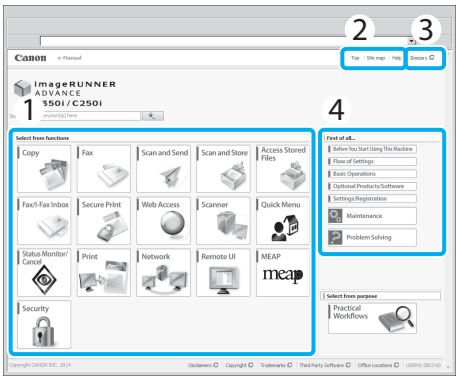

1 Select from functions

The instructions for each function and operation method are described.

2 [Top], [Site map], [Help]

Links to the e-Manual's top page, site map, and help are displayed.

3 [Glossary]

A link to the glossary is displayed.

4 First of all...

This section contains information needed to use the machine, and information on optional products and software.

Contents

Preface 04

How To Use This Manual 04
- Symbols Used in This Manual 04
- Keys and Buttons Used in This Manual 04
- Displays Used in This Manual 05
- Illustrations Used in This Manual 05
- Trademarks 05

Chapter 1
Installation of the Machine

Installation Location and Handling 08
- Installation Precautions 08
  - Avoid Installing the Machine in the Following Locations 08
  - Select a Safe Power Supply 09
  - Moving the Machine 09
  - Provide Adequate Installation Space 09
- Handling Precautions 10

Installing the Machine 11
- 1 Carrying the Machine to the Installation Site 11
- 2 Removing the Packing Materials 12
- 3 Checking Items Included with the Machine 14
- 4 Installing the Toner Cartridge 15
- 5 Loading Paper into the Paper Drawer for the First Time 15
- 6 Storing the Envelope Feeder Attachment in a Paper Drawer 16
- 7 Attaching the Precaution Label 16
- 8 Attaching the Glass Cleaning Sheet Storage Box 17
- 9 Connecting Cables 17
- 10 Turning the Main Power ON 18

Chapter 2
Setting and Registering the Machine

Configuring the Machine (Setup Guide) 20

Changing Specified Settings 28

Chapter 3
Before Using This Machine

Parts and Their Functions 30
- External View 30
- Internal View 31
- Feeder 32
- Control Panel Parts and Functions 32
  - Adjusting the Angle of the Control Panel 33

Main Power and Energy Saver Key 34
- How to Turn ON the Main Power 34
- Energy Saver Key 35
- Shutting Down the Machine 35

Backing Up/Exporting Data 36
- Data You Can Import/Export All 36
- Data You Can Import/Export Individually 36
- Other Data You Can Import/Export/Back Up 37

Chapter 4
Routine Maintenance

Loading Paper 40
- Loading Paper into a Paper Drawer 40
- Loading Envelopes 43
- Checking the Types of Paper That Can Be Used 43

Replacement Parts 44
- Replacing the Staple Cartridge (Staple Finisher-S1) 45
- Replacing the Toner Cartridge 46
- Replacing the Waste Toner Container 49
- Replacing the Drum Unit 51

Consumables 54
- Recommended Paper 54
- Toner 54
- Drum Unit 55
- Staple Cartridge 55

Chapter 5
Troubleshooting

Routine Cleaning 58
- Originals Cannot Be Scanned Properly (Cleaning the Platen Glass) 59
- Scanned Originals Become Dirty (Manual Feeder Cleaning) 59
- When White Streaks Appear on Prints (Cleaning the Dust Proof Glass) 60

When an Error Message/Error Code Is Displayed 62
- When an Error Message Is Displayed 62
- When an Error Code Is Displayed 62

Service Call Message 63
- Contacting Your Local Authorized Canon Dealer 64
- Setting the Limited Functions Mode from the Service Call Message Screen 64
- Functions Available When the Printer/Scanner Cannot Be Used Due to an Error 65

Locations of Staple/Paper Jams 66

Chapter 6
Appendix

Specifications 68
- Main Unit 68
- Feeder 71
- Cassette Feeding Unit-AG1 72
- Cassette Feeding Unit-AH1 72
- Staple Finisher-S1 73
- Copy Card Reader-F1 73
- Super G3 FAX Board-AN1 74
- Send Function (Scan Features) 75
- Send Function (E-Mail and I-Fax Features) 76
- Network Environment (Hardware Specifications) 76
- Network Environment (Software Specifications) 77
- Printer Settings (Software Specifications) 77

Legal Notices 78
- Product Name 78
- EMC requirements of EC Directive 78
- Laser Safety 78
- Additional Information 78
- IPv6 Ready Logo 79
- WEEE Directive / Rule 79
- Information Security Standard (IEEE 2600) 80
- Copyright 80
- Disclaimers 80
- Legal Limitations on the Usage of Your Product and the Use of Images 80
- Super G3 80

Important Safety Instructions 81
- Installation 81
- Power Supply 81
- Handling 82
- Maintenance and Inspections 83
- Consumables 84
- Other Warnings 84

Preface

Thank you for purchasing the Canon imageRUNNER ADVANCE C350i/C250i. Please read this manual thoroughly before operating the machine to familiarize yourself with its capabilities, and to make the most of its many functions. For information on the detailed settings for the functions described in this manual, see the e-Manual. After reading this manual, store it in a safe place for future reference.

How To Use This Manual

Symbols Used in This Manual

The following symbols are used in this manual to explain procedures, restrictions, handling precautions, and instructions that should be observed for safety.

WARNING

Indicates a warning concerning operations that may lead to death or injury to persons if not performed correctly. To use the machine safely, always pay attention to these warnings.

CAUTION

Indicates a caution concerning operations that may lead to injury to persons if not performed correctly. To use the machine safely, always pay attention to these cautions.

IMPORTANT

Indicates operational requirements and restrictions. Be sure to read these items carefully to operate the machine correctly, and avoid damage to the machine or property.

NOTE

Indicates a clarification of an operation, or contains additional explanations for a procedure. Reading these notes is highly recommended.

Indicates an operation that must not be performed. Read these items carefully, and make sure not to perform the described operations.

Keys and Buttons Used in This Manual

The following symbols and key/button names are a few examples of how keys and buttons to be clicked or pressed are expressed in this manual:

- Touch Panel Display Keys: [Key Name]
  Example: [Cancel]
- Control Panel Keys: Key Icon (Key Name)
  Example: (Start)
- Buttons on Computer Operation Screens: [Button Name]
  Example: [OK]

Displays Used in This Manual

Screen shots of the touch panel display used in this manual are those taken when the imageRUNNER ADVANCE C350i has the following optional equipment attached to it:

- Cassette Feeding Unit-AH1
- Staple Finisher-S1
- Super G3 FAX Board
- Web Access Software

Note that functions that cannot be used depending on the model or options do not appear on the touch panel display.

Keys to Press for Operation

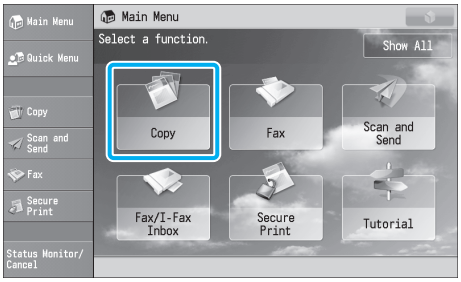

The keys which you should press are marked with a [ ], as shown above. When multiple keys can be pressed on the touch panel display, all keys are marked. Select the keys, which suit your needs.

Screen shots used in this manual may differ from the ones you actually see.

Illustrations Used in This Manual

Illustrations used in this manual are those displayed when the imageRUNNER ADVANCE C350i has the following optional equipment attached to it:

- Cassette Feeding Unit-AH1

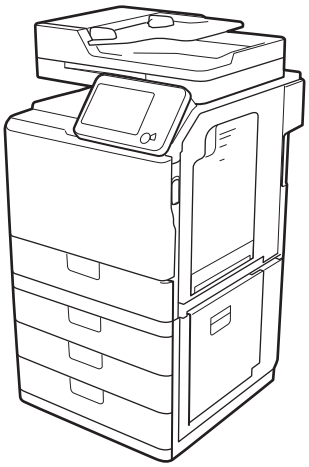

Trademarks

"MEAP" is a trademark of CANON Inc., referring to an "application platform" for Canon multifunction and single function printers.

This product contains the Universal Font Scaling Technology or UFST® under license from Monotype Imaging, Inc. UFST® is a trademark of Monotype Imaging, Inc. registered in the United States Patent and Trademark Office and may be registered in certain jurisdictions.

Apple, EtherTalk, LocalTalk, Mac, Macintosh, Mac OS, and Safari are trademarks of Apple Inc., registered in the U.S. and other countries.

Microsoft, Windows, Windows Vista, Windows Server, Internet Explorer, Excel and PowerPoint are either registered trademarks or trademarks of Microsoft Corporation in the United States and/or other countries.

Adobe, PostScript, and the PostScript logo are either registered trademarks or trademarks of Adobe Systems Incorporated in the United States and/or other countries.

Copyright © 2007 -08 Adobe Systems Incorporated. All rights reserved.

Protected by U.S. Patents 5,737,599; 5,781,785; 5,819,301; 5,929,866; 5,943,063; 6,073,148; 6,515,763; 6,639,593; 6,754,382; 7,046,403; 7,213,269; 7,242,415; Patents pending in the U.S. and other countries.

All instances of the name PostScript in the text are references to the PostScript language as defined by Adobe Systems Incorporated unless otherwise stated. The name PostScript also is used as a product trademark for Adobe Systems' implementation of the PostScript language interpreter.

Except as otherwise stated, any reference to a "PostScript printing device," "PostScript display device," or similar item refers to a printing device, display device or item (respectively) that contains PostScript technology created or licensed by Adobe Systems Incorporated and not to devices or items that purport to be merely compatible with the PostScript language.

Adobe, the Adobe logo, PostScript, the PostScript logo, and PostScript 3 are either registered trademarks or trademarks of Adobe Systems Incorporated in the United States and/or other countries.

Linux is a registered trademark of Linus Torvalds. Microsoft and Windows are either registered trademarks or trademarks of Microsoft Corporation in the United States and/or other countries.

All other trademarks are the property of their respective owners.

The PDF logo is a trademark or registered trademark of Adobe Systems Incorporated in the United States and other countries.

Copyright © 2008 Adobe Systems Incorporated. All rights reserved.

Protected by U.S. Patents 6,185,684; 6,205,549; 7,213,269; 7,272,628; 7,278,168; Patents pending in the U.S. and other countries.

All instances of the name PostScript in the text are references to the PostScript language as defined by Adobe Systems Incorporated unless otherwise stated. The name PostScript also is used as a product trademark for Adobe Systems' implementation of the PostScript language interpreter.

Except as otherwise stated, any reference to a "PostScript printing device," "PostScript display device," or similar item refers to a printing device, display device or item (respectively) that contains PostScript technology created or licensed by Adobe Systems Incorporated and not to devices or items that purport to be merely compatible with the PostScript language.

Adobe, the Adobe logo, PostScript, the PostScript Logo, and PostScript 3 are either registered trademarks or trademarks of Adobe Systems Incorporated in the United States and/or other countries.

All other trademarks are the property of their respective owners.

Other product and company names herein may be the trademarks of their respective owners.

1

Installation of the Machine

Installation Location and Handling **08**
Installation Precautions 08
Handling Precautions 10

Installing the Machine **11**
1 Carrying the Machine to the Installation Site 11
2 Removing the Packing Materials 12
3 Checking Items Included with the Machine 14
4 Installing the Toner Cartridge 15
5 Loading Paper into the Paper Drawer for the First Time 15
6 Storing the Envelope Feeder Attachment in a Paper Drawer 16
7 Attaching the Precaution Label 16
8 Attaching the Glass Cleaning Sheet Storage Box 17
9 Connecting Cables 17
10 Turning the Main Power ON 18

Installation Location and Handling

This section describes precautions for installation location and handling. We recommend that you read this section prior to using this machine.

Installation Precautions

Avoid Installing the Machine in the Following Locations

Avoid locations subject to temperature and humidity extremes, whether low or high.
For example, avoid installing the machine near water faucets, hot water heaters, humidifiers, air conditioners, heaters, or stoves.

Avoid installing the machine in direct sunlight.
If this is unavoidable, use curtains to shade the machine. Be sure that the curtains do not block the machine's ventilation slots or louvers, or interfere with the electrical cord or power supply.

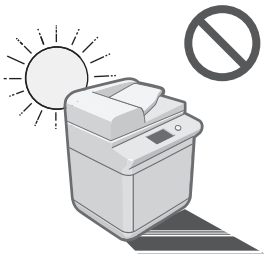

Avoid locations where a considerable amount of dust accumulates./Avoid locations near volatile or flammable materials, such as alcohol or paint thinner./Avoid locations where ammonia gas is emitted.

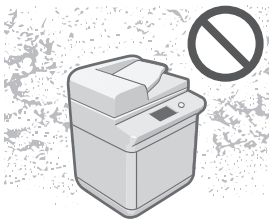

Avoid poorly ventilated locations.
This machine generates a slight amount of ozone etc. during normal use. Although sensitivity to ozone etc. may vary, this amount is not harmful. Ozone etc. may be more noticeable during extended use or long production runs, especially in poorly ventilated rooms. It is recommended that the room be appropriately ventilated, sufficient to maintain a comfortable working environment, in areas of machine operation. In addition, do not install this machine where it exhausts directly onto a person.

Avoid locations that are subject to vibration./ Avoid exposing the machine to rapid changes in temperature.
If the room in which the machine is installed is cold but rapidly heated, water droplets (condensation) may form inside the machine. This may result in a noticeable degradation in the quality of the copied image, the inability to properly scan an original, or the copies having no printed image at all.

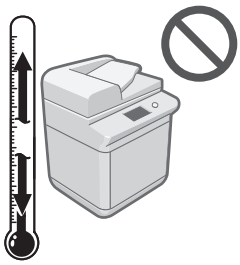

Avoid installing the machine near computers or other precision electronic equipment.
Electrical interference and vibrations generated by the machine during printing can adversely affect the operation of such equipment.

Avoid installing the machine near televisions, radios, or similar electronic equipment.
The machine might interfere with sound and picture signal reception.

Insert the power plug into a dedicated power outlet, and maintain as much space as possible between the machine and other electronic equipment.

Contact an authorized Canon dealer if communication is unavailable.
Depending on your locale or your telephone connection, you may be unable to perform data communication. In this case, contact your local authorized Canon dealer.

Avoid installing the machine at high altitudes of about 3,000 meters above sea level, or higher.
Machines with a hard disk may not operate properly when used at high altitudes of about 3,000 meters above sea level, or higher.

Select a Safe Power Supply

- Plug the machine into a 220 - 240 V AC outlet.
- Make sure that the power supply for the machine is safe, and has a steady voltage.
- Do not connect other electrical equipment to the same power outlet to which the machine is connected.
- Do not connect the power cord to a multiplug power strip, as this may cause a fire or electrical shock.
- The power cord may become damaged if it is stepped on, affixed with staples, or if heavy objects are placed on it. Continued use of a damaged power cord can lead to an accident, such as a fire or electrical shock.
- The power cord should not be taut, as this may lead to a loose connection and cause overheating, which could result in a fire.
- If excessive stress is applied to the connection part of the power cord, it may damage the power cord or the wires inside the machine may disconnect. This could result in a fire. Avoid the following situations:
  - Connecting and disconnecting the power cord frequently.
  - Tripping over the power cord.
  - The power cord is bent near the connection part, and continuous stress is being applied to the power outlet or the connection part.
  - Applying excessive force on the power plug.

Moving the Machine

If you intend to move the machine, even to a location on the same floor of your building, contact your local authorized Canon dealer beforehand. Do not attempt to move the machine yourself.

Provide Adequate Installation Space

Provide enough space on each side of the machine for unrestricted operation.

When no optional products are attached:

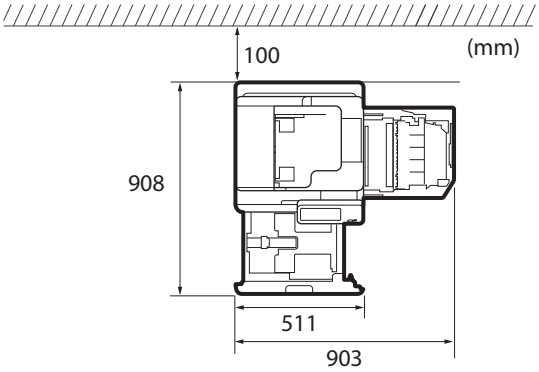

When the Staple Finisher-S1 is attached:

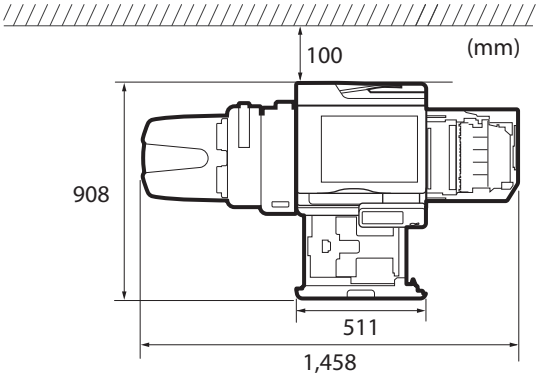

Handling Precautions

- Do not attempt to disassemble or modify the machine.
- Some parts inside the machine are subject to high-voltages and temperatures. Take adequate precautions when inspecting the inside of the machine. Do not carry out any inspections that are not described in the manuals for this machine.

- Be careful not to spill liquid or drop any foreign objects, such as paper clips or staples inside the machine. If a foreign object comes into contact with electrical parts inside the machine, it might cause a short circuit and result in a fire or electrical shock.

- If there is smoke, or unusual noise, immediately turn the main power switch OFF, disconnect the power cord from the power outlet, and then call your local authorized Canon dealer. Using the machine in this state may cause a fire or electrical shock. Also, avoid placing objects around the power plug so that the machine can be disconnected whenever necessary.
- Do not turn the main power switch OFF or open the front covers while the machine is in operation. This may result in paper jams.
- Do not use flammable sprays, such as spray glue, near the machine. There is a danger of ignition.

- For safety reasons, press (Energy Saver) when it will not be used for a long period of time, such as overnight. As an added safety measure, turn OFF the main power switch, and disconnect the power cord when the machine will not be used for an extended period of time, such as during consecutive holidays.

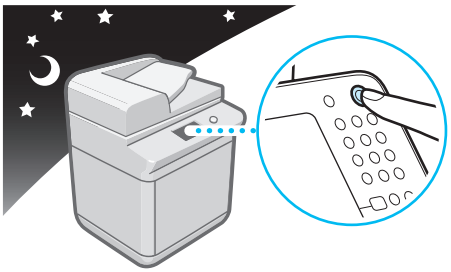

- Use a modular cable that is shorter than 3 meters.
- Use a USB cable that is shorter than 3 meters.

Installing the Machine

This section describes how to install the machine. Make sure that you read this section prior to installing the machine.

1 Carrying the Machine to the Installation Site

01 Lift the machine with two or more people by gripping the indented area on the sides of the machine, and carry the machine to the installation site.

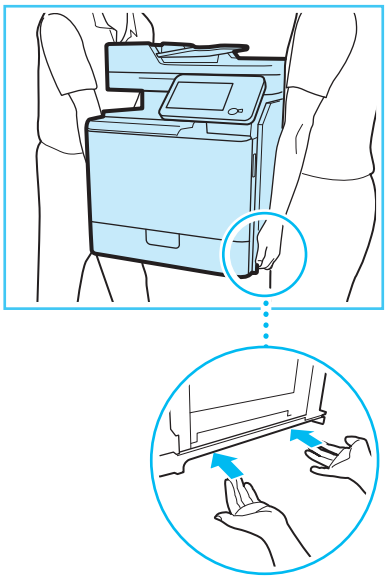

CAUTION

- Make sure to grip the handles on the sides of the machine firmly when lifting. Holding the machine in an unspecified manner may result in personal injury or damage to the machine.

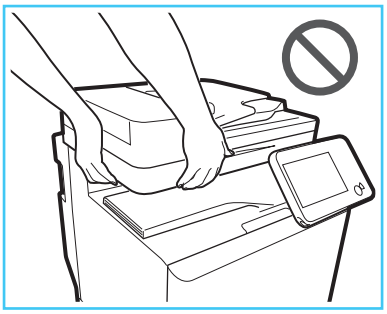

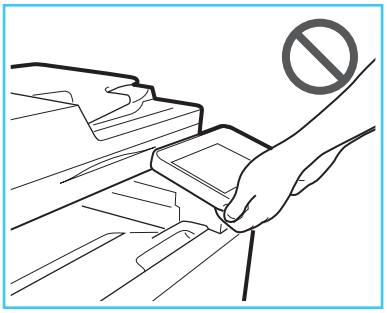

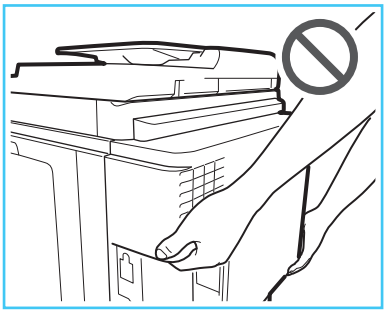

- Those with back pain should check the weight of the machine before lifting.
- Make sure that you do not slip on the bag the machine came in.

2 Removing the Packing Materials

When performing the following steps, make sure to remove all orange tape attached to the machine.

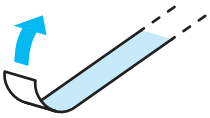

01 Remove the items and packing materials from the paper drawer.

1. Grip the handle, and pull out the paper drawer until it stops.

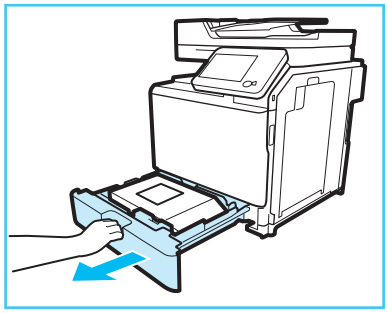

2. Remove the box containing the included items.

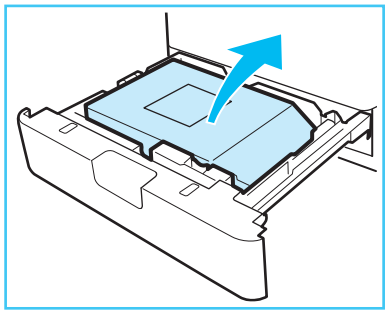

3. Remove the packing materials attached to the paper drawer.

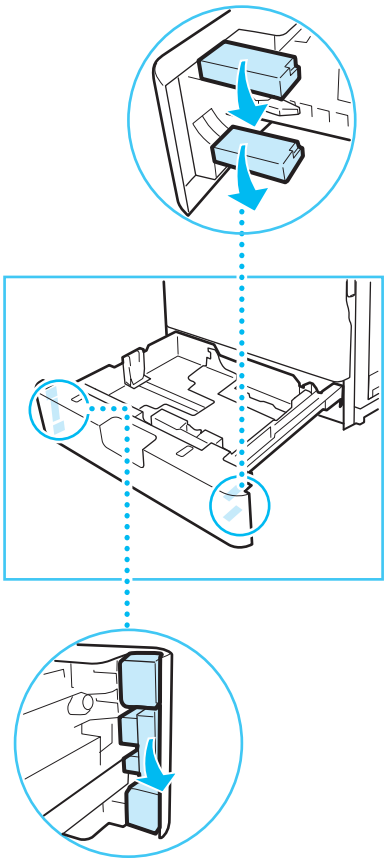

02 Gently push the paper drawer back into the machine.

CAUTION

When returning the paper drawer to its original position, be careful not to get your fingers caught, as this may result in personal injury.

03 Remove the protective sheets attached to each part of the machine.

- Platen Glass

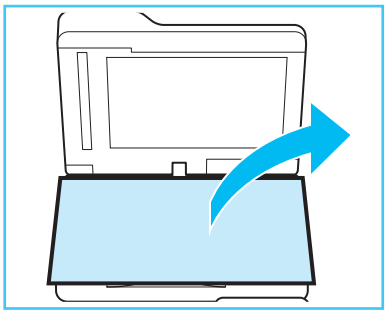

- Control Panel

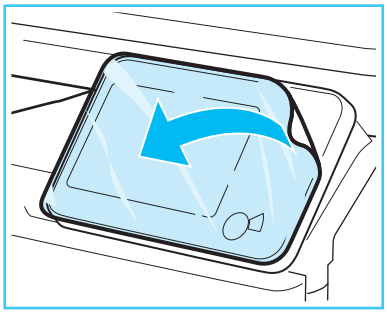

- Upper Part of the Front Cover of the Main Unit

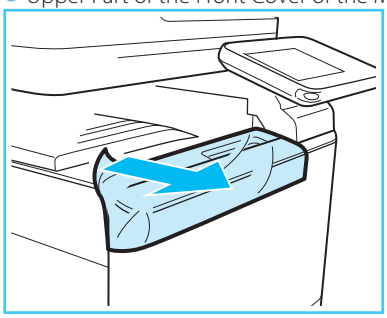

If you own the optional Cassette Feeding Unit-AG1/Cassette Feeding Unit-AH1, carefully read "Attaching the Cassette Feeding Unit to the Machine" and attach it to the machine.

3 Checking Items Included with the Machine

Check each item included with the machine against this list to ensure that nothing is missing.

CD-ROM x 4

Paper Manual x 2

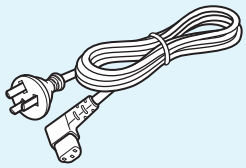

Power Cord

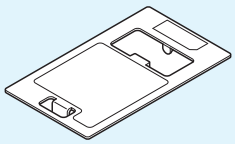

Envelope Feeder Attachment

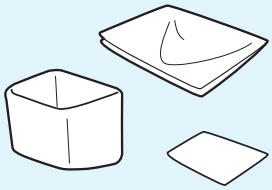

Glass Cleaning Sheet/Glass Cleaning Sheet Storage Box/ Double-Sided Tape

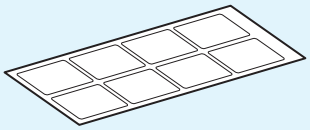

Paper Size Labels

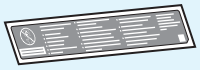

x 2

x 1

Precaution Labels

4 Installing the Toner Cartridge

01 Open the front cover of the main unit.

02 Open the package of the toner cartridge, and remove the toner cartridge.

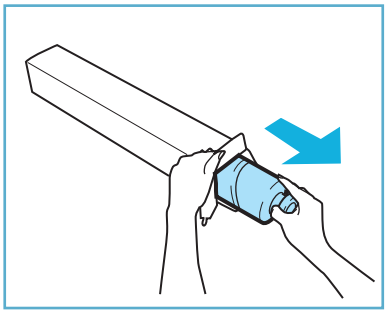

03 Hold the new toner cartridge in both hands as shown in the illustration, and shake it vertically approximately 10 times.

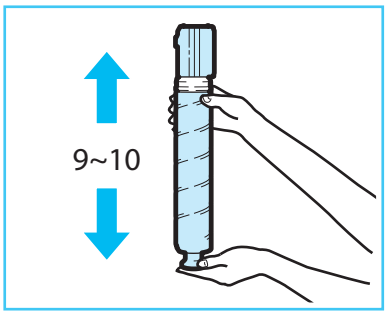

IMPORTANT

Do not shake the toner cartridge in the direction shown in the illustration. Doing so may cause the toner to not output properly.

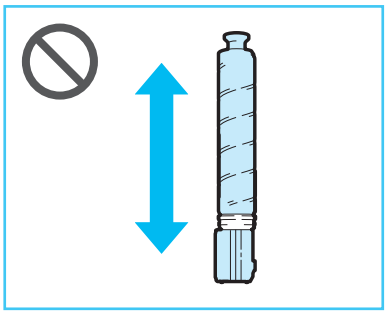

04 Insert the new toner cartridge.

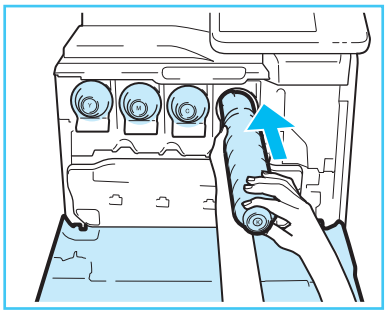

1. Match the new toner cartridge with the slot on the main unit as shown in the illustration.
2. Push the new toner cartridge in as far as possible.

NOTE

Support the toner cartridge with one hand from underneath while pushing it into the machine with the other hand.

05 Close the front cover of the main unit.

CAUTION

When closing the cover, be careful not to get your fingers caught, as this may result in personal injury.

5 Loading Paper into the Paper Drawer for the First Time

For instructions on loading plain paper into the paper drawer, see "Loading Paper into a Paper Drawer," on p.40.

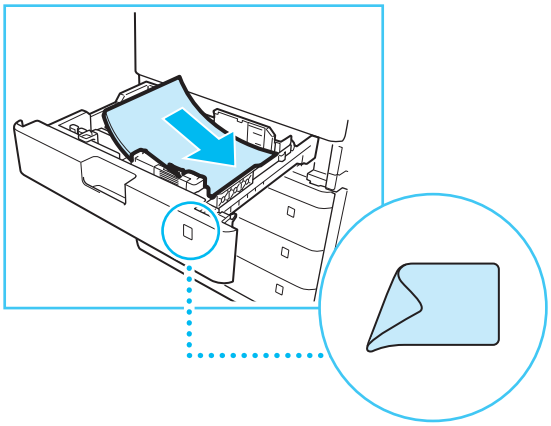

After loading the paper, attach a paper size label.

6 Storing the Envelope Feeder Attachment in a Paper Drawer

Use the Envelope Feeder Attachment only when loading envelopes to a paper drawer. When not using the Envelope Feeder Attachment, store it in the storage area of the paper drawer. For instructions on loading envelopes, see e-Manual > Maintenance.

01 Grip the handle, and pull out the paper drawer until it stops.

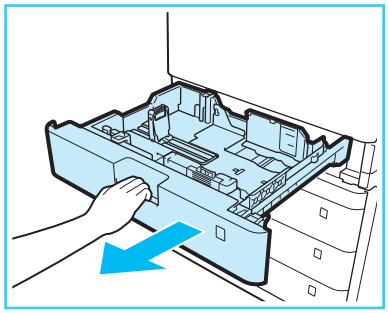

02 Store the Envelope Feeder Attachment in the storage area of the paper drawer.

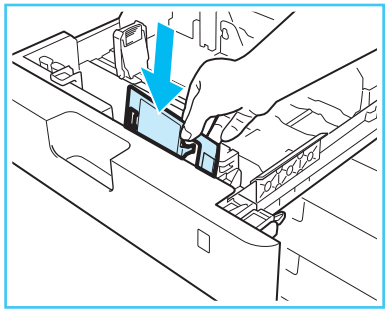

03 Gently push the paper drawer back into the machine.

CAUTION

When returning the paper drawer to its original position, be careful not to get your fingers caught, as this may result in personal injury.

7 Attaching the Precaution Label

01 Open the feeder.

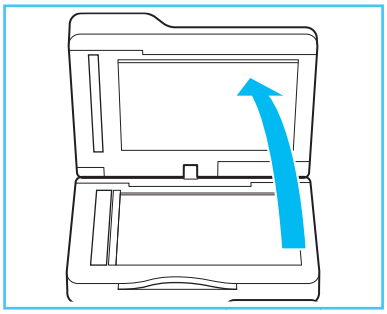

02 Select the desired language label among the supplied precaution labels, peel off the label, then affix the label to the part indicated in the illustration.

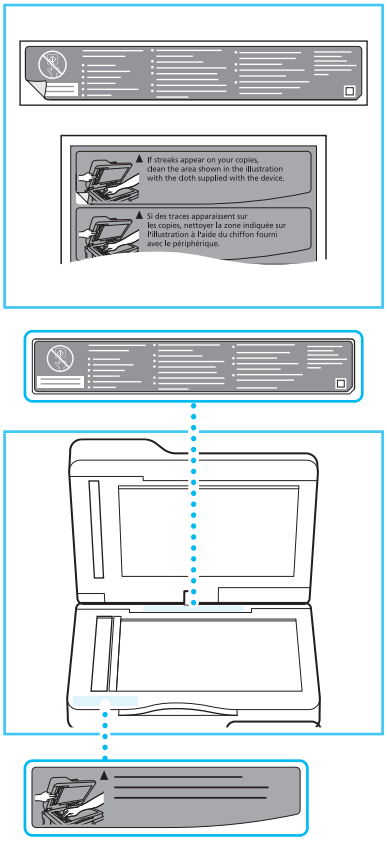

03 Gently close the feeder.

CAUTION

Close the feeder gently to avoid catching your hands, as this may result in personal injury.

8 Attaching the Glass Cleaning Sheet Storage Box

This section describes how to attach the box for storing sheets for cleaning the platen glass to the machine. It is recommended that you attach the box to the location indicated in the illustration.

01 Attach the double-sided tape onto the glass cleaning sheet storage box, and remove the release liner from the double-sided tape.

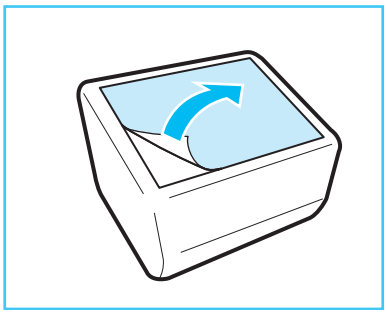

02 Attach the box to the machine.

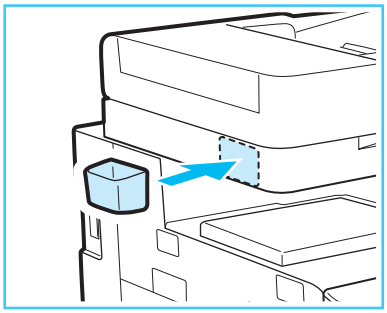

NOTE

Change the location to attach the box to depending on the attached optional products.

9 Connecting Cables

01 Connect a modular cable into the socket on the back left of the machine.

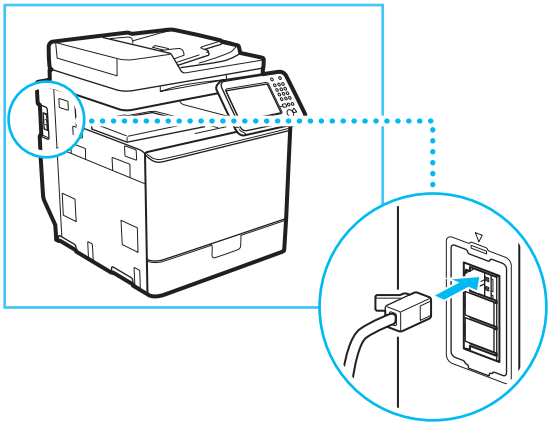

NOTE

This step is required when the optional Super G3 FAX Board is installed.

02 Connect a LAN cable into the socket on the back right of the machine.

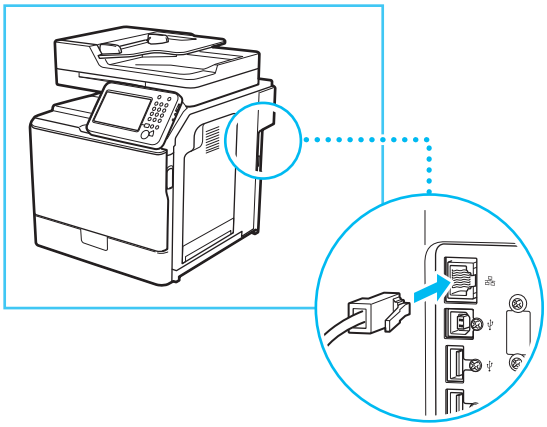

10 Turning the Main Power ON

For Users with the Optional Finisher:
See the installation manual supplied with the optional finisher to attach the finisher to the machine, then connect the power cord.

01 Connect the power cord into the socket on the back right of the machine and to the wall outlet.

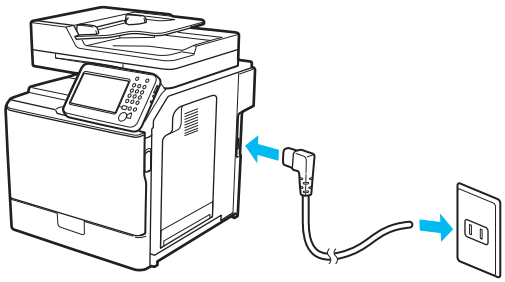

02 Turn ON the main power.

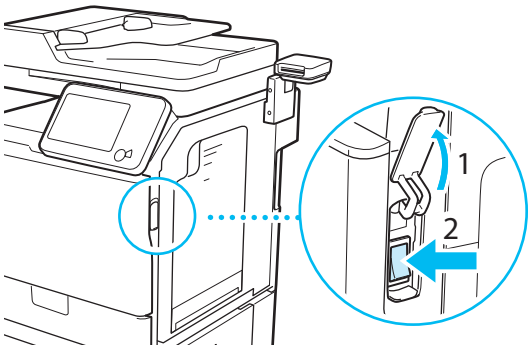

The main power indicator on the control panel lights when you turn ON the main power switch.

Various screens appear when system software is loading.

NOTE

For instructions on turning the main power ON and OFF, and on using the Energy Saver key, see "Main Power and Energy Saver Key," on p.34.

2

Setting and Registering the Machine

Configuring the Machine (Setup Guide) 20
Changing Specified Settings 28

Configuring the Machine (Setup Guide)

When the power is turned ON for the first time after installing the machine, the Setup Guide screen is displayed. It is recommended that you follow the instructions that appear on the touch panel display to configure the machine.

NOTE

- You cannot exit the Setup Guide until it is finished.
- You can restart the Setup Guide from [Start Setup Guide] ((Settings/Registration) > [Management Settings] > [License/Other]).
- You can change settings registered in the Setup Guide from the items in (Settings/Registration). For more information, see "Changing Specified Settings," on p.28.
- For most settings in the Setup Guide, you can move to the next setting even without entering anything. Unset items can be set separately. You can set them after finishing the Setup Guide.
- If the power is turned OFF while using the Setup Guide, when you turn the power back ON, the Setup Guide is automatically started. Perform Setup Guide settings once again.
- Once the Setup Guide has been completed, it will not start up again when turning ON the machine.

01 Configuring the Touch Panel Display's Language and Keyboard Layout

1. Set the language and keyboard layout → press [OK].

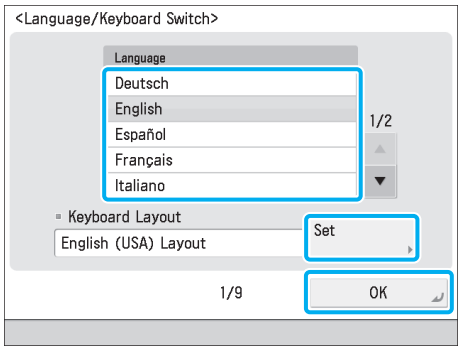

02 Registering the Information of Paper That Was Loaded When Installing the Machine

1. Select the paper source that you want to set the paper type for → press [Set].

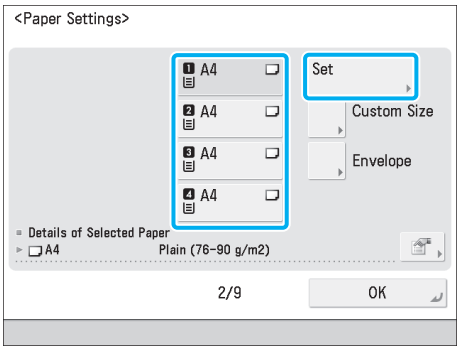

2. Select the paper type → press [OK].

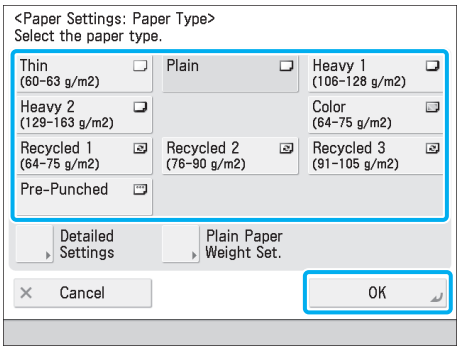

If you select [Plain], you can select the paper weight from [Plain Paper Weight Set.].

If there is no button for the loaded paper, press [Detailed Settings] → select the paper type from the detailed setting screen.

03 Logging In

In order to continue on with network settings, date/time, and fax settings, it is necessary to log in as an administrator.

To end setting configuration here, press [Skip] and see step 13.

1. Press [Log In] → enter the authentication information → press [Log in] → [OK].

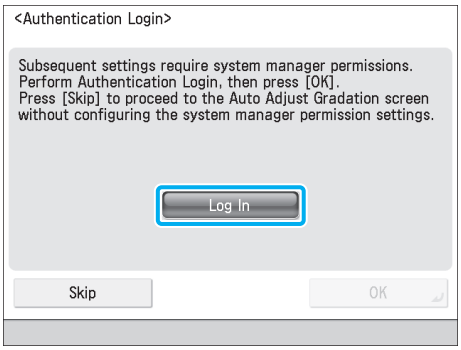

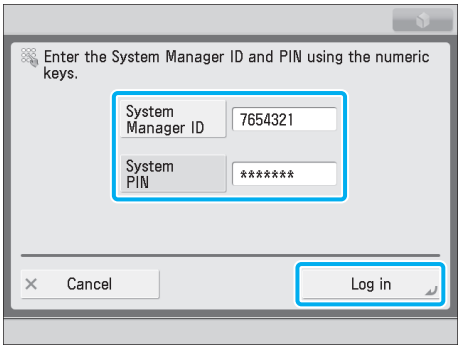

If the System PIN is still the default setting, a screen prompting you to change the System PIN appears. Change the PIN according to the instructions on the screen.

IMPORTANT

- The default setting for both the System Manager ID and System PIN is '7654321'. After installing the machine, when logging in for the first time, enter '7654321' for both the System Manager ID and System PIN.
- Make sure that you do not forget the System PIN. If you forget the System PIN, contact your local authorized Canon dealer.

04 Setting the Date and Time

1. Select the time zone from the <Time Zone> drop-down list.
2. Enter the current date and time using 0 – 9 (numeric keys) → press [OK].

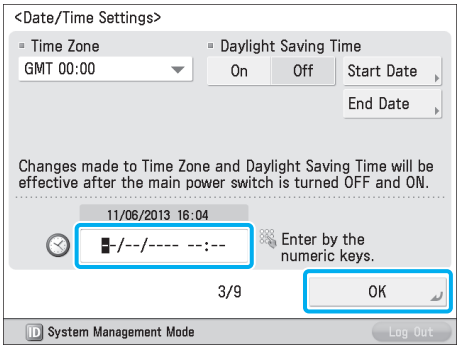

Enter the day and the month using four digits (including zeros). The time is displayed in 24-hour notation.

Examples:
May 6 → 0605
7:05 a.m. → 0705
11:18 p.m. → 2318

If you make a mistake when entering values, press C (Clear) → enter the values again, starting with the day.

NOTE

- The standard time zones of the world are expressed globally in terms of the difference in hours (± up to 12 hours) from GMT (± 0 hours). A time zone is a region throughout which this time difference is the same.
- The default time zone may differ depending on the country.
- If you set Daylight Saving Time, specify both the starting and ending date in [Start Date] and [End Date]. The machine automatically sets the standard time of the machine one hour forward at the specified date and time.
- The date/time settings can be changed after finishing the Setup Guide. For more information, see e-Manual > Settings/Registration.

05 Setting an IP Address

You can perform the following settings in order to connect to and use a TCP/IP network with the machine. Set IPv4 here.

1. Set <Use IPv4> to 'On' → set <Use IPv6> to 'Off' → press [Next].

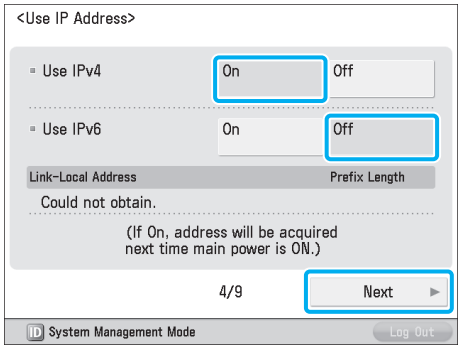

2. Specify each setting → press [OK].

- For manual entry:
  When the network administrator connects to a network where each machine has a fixed IP assigned to it, the IP address must be set manually.

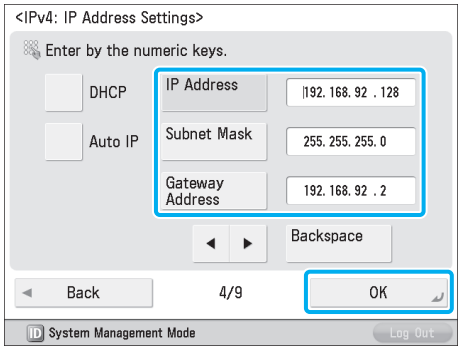

If you do not know the IP, contact your administrator.

- To enable DHCP:
  When connecting to a network where each machine's IP address is automatically assigned to it by DHCP, set <DHCP> to 'On'.

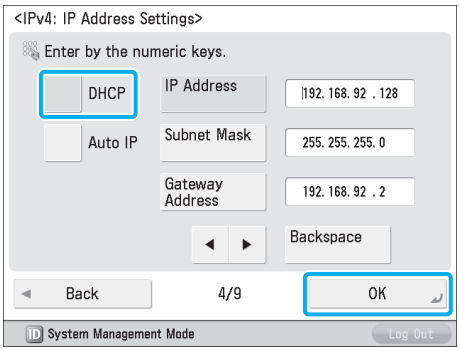

NOTE

By setting <Auto IP> to 'On', you can have the machine automatically search the network (LAN) being used for usable IP addresses and assign one to the machine. This function bypasses the DHCP server to automatically assign IP addresses, however the machine cannot communicate over the router when using this function.

06 Setting the DNS Server

DNS is the abbreviation of Domain Name System, and is the function that binds an IP address and a name (in this machine, host name). By setting the DNS server address for this machine, when accessing this machine through the network, this machine is accessed not by IP address but by a name such as "iR-ADV XXXX."

When using DHCP, the IP address may change, so it is necessary to update IP addresses bound to names. In these cases, it is necessary to configure "Dynamic Update" to update the links between IP addresses and names.

A dynamic DNS server is required to use DNS Dynamic Update.

This section describes how to specify the IPv4 settings.

1. Specify the following settings in <IPv4> → press [Next].

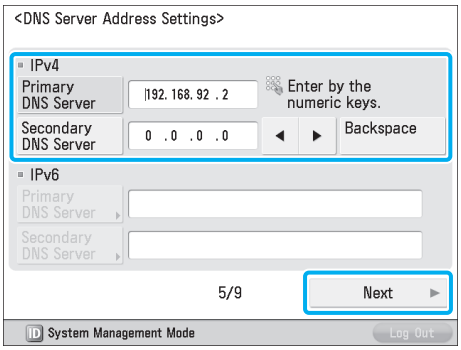

- To enable DNS Dynamic Update:
  Enter the DNS server IPv4 address in [Primary DNS Server].
- To disable DNS Dynamic Update:
  Enter [Primary DNS Server] and [Secondary DNS Server].

NOTE

Secondary DNS Server:
The substitute DNS server that is used when the primary DNS server cannot be used. If you do not want to set the secondary DNS server, enter '0.0.0.0'. When using DNS Dynamic Update, setting this is not necessary.

2. Enter [Host Name] and [Domain Name] for <IPv4> → press [Next].

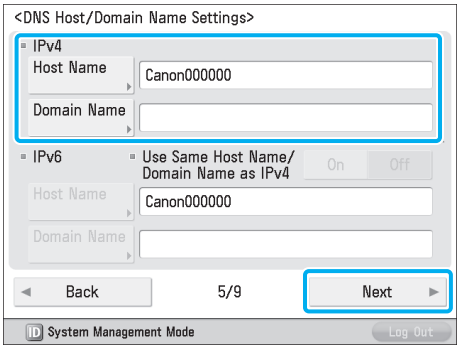

[Host Name]:
The name that appears on the network (the machine's name, etc.)

[Domain Name]:
The network domain that this machine belongs to

3. Specify <DNS Dynamic Update> for <IPv4> → press [OK].

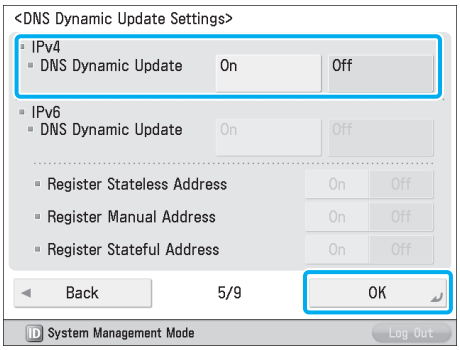

By setting <DNS Dynamic Update> to 'On', DNS Dynamic Update is enabled.

07 Setting the Proxy Server

If accessing the internet or other external network through a proxy server from this machine, these settings are required.

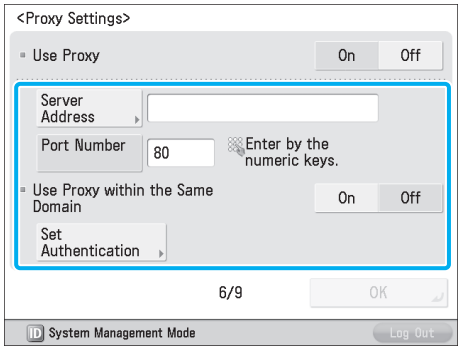

[Server Address]:
Enter the IP address of the proxy server or the path of the server (i.e., example.company.com).

[Port Number]:
Enter the port number of the proxy server.

<Use Proxy within the Same Domain>:
If using the proxy within the same domain, press [On].

[Set Authentication]:
If authentication is required when accessing an external network through a proxy server, enter the user name and password registered on the server.

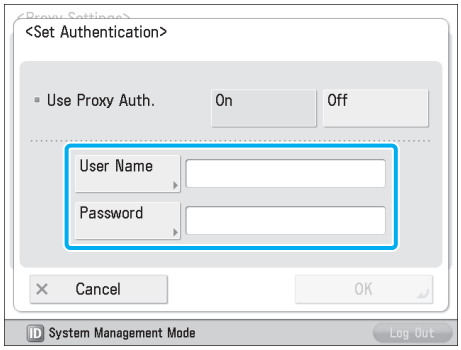

[User Name]:
Enter the user name for the proxy authentication.

[Password]:
Enter the password for the proxy authentication.

If the Fax function is available for use, proceed to "8.Setting Country/Region."

If the Fax function is not available for use, proceed to "12. Specifying the System Manager Information Settings."

08 Setting Country/Region

1. Select the country/region where the machine is located → press [Next].

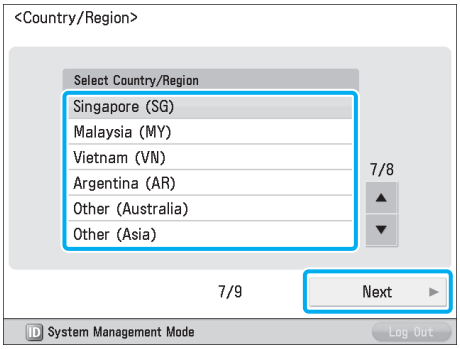

NOTE

This setting is necessary to specify the fax line settings. This setting can only be carried out in the Setup Guide.

09 Registering Your Machine's Fax Number

This section describes how to register the fax number your machine uses when sending faxes. This number is printed on the document that you fax to the receiving party.

1. Enter the fax number → press [Next].

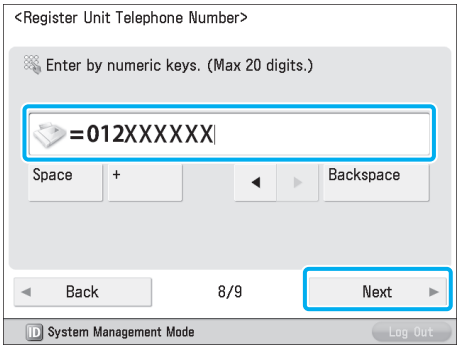

10 Registering the Unit Name

The unit's name appears on the receiving party's fax machine, or is printed on the received document as the Sender Name. You can register the name of your company or department as the unit name.

1. Press [Set] → enter the unit name → press [Next].

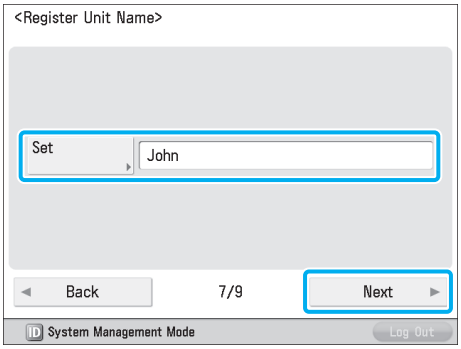

11 Setting the Line Type

You can set the phone line type to use for sending.

1. Select the line type → press [OK].

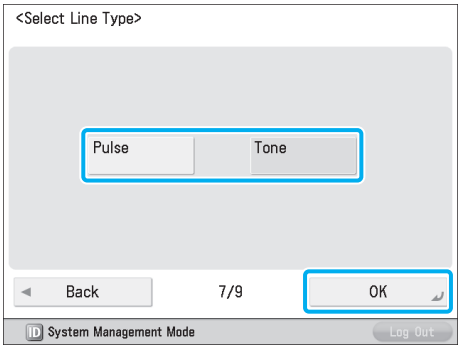

12 Specifying the System Manager Information Settings

You can register the System Manager Information settings.

1. Change the authentication information → press [Next] → enter information if necessary → press [OK].

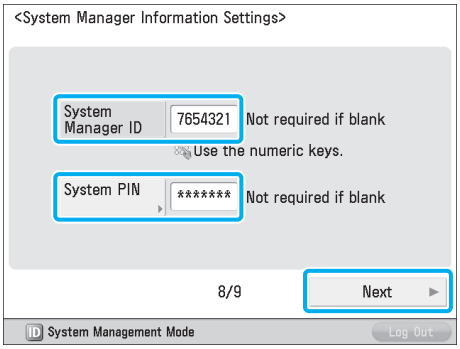

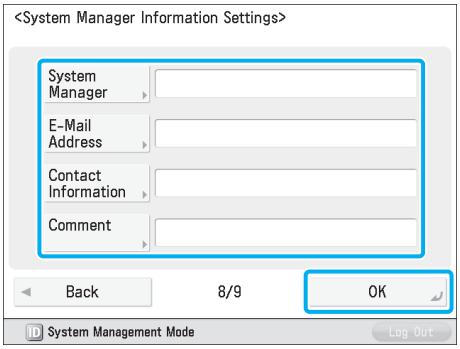

IMPORTANT

The default setting for both the System Manager ID and System PIN is '7654321'. Make sure to change these settings.

13 Adjusting the Gradation and Density Settings of the Machine

This procedure involves outputting test pages and placing them on the platen glass for scanning. Finishing this procedure enables you to reduce irregularities by automatically adjusting the gradation, density, and color of images printed by the machine. Perform a full adjust.

IMPORTANT

- The types of paper, which can be used with [Auto Adjust Gradation] are Thin, Plain 1, Plain 2, Recycled 1, and Recycled 2. Do not use other types of paper.
- It is recommended that you select [Full Adjust] when performing an automatic gradation adjustment. Select [Quick Adjust] for a quick, but less complete adjustment between regular full adjustment recalibrations.
- Make sure that you place the test pages properly. Accurate recalibrations of the gradation, density, and color settings of the machine cannot be made if the test pages are not scanned correctly.
- Two test pages are output by the machine during this adjustment. This machine adjusts the toner and print speed according to the paper type. To make effective adjustments, select the correct paper type.

1. Press [Full Adjust].

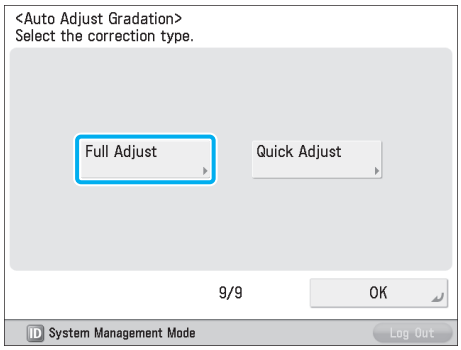

2. Select the paper source → press [OK].

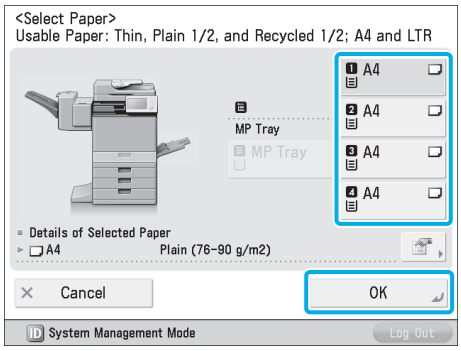

3. Press [Start Printing].

NOTE

If paper appropriate for the test page is not loaded in any paper source, a message asking you to load the appropriate paper appears. Load the appropriate paper in a paper source.

4. Place the test page on the platen glass → press [Start Scanning].

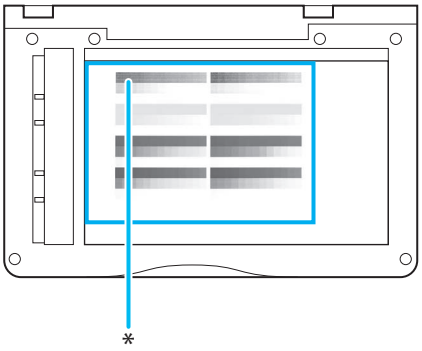

* Place the test page face down on the platen glass, while aligning the corner where the black test patterns are located with the arrow on the top left corner of the platen glass.

5. Remove the test page from the platen glass → press [Start Printing].

Repeat steps 4 and 5.

14 Closing the Setup Guide

Closing the Setup Guide by pressing [OK] causes the machine to restart.

After the restart, the main menu is displayed and you can use the machine.

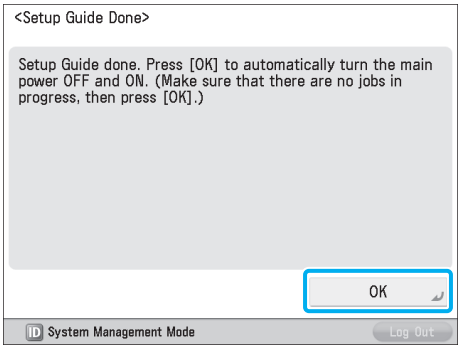

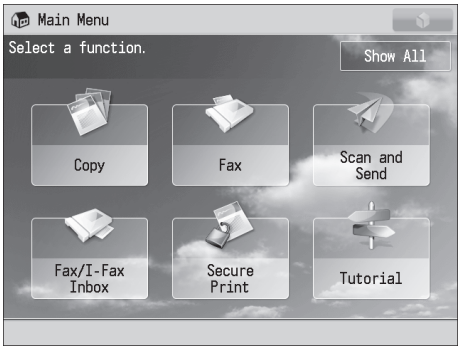

Changing Specified Settings

You can change settings registered in the Setup Guide from the items in (Settings/Registration). From [Start Setup Guide] (Settings/Registration), you can start the Setup Guide and redo all the settings from the beginning. (See e-Manual > Security.) For more information on changing the settings, see the following.

Setting Description	Location in e-Manual
Language, keyboard layout	Settings/Registration > Preferences > Display Settings > Changing the Display Language/ Keyboard on the Touch Panel Display
Information on the paper loaded in the paper source	Settings/Registration > Preferences > Paper Settings > Registering the Paper Size and Type for a Paper Source
Date/time	Settings/Registration > Preferences > Timer/Energy Settings > Current Date and Time
Network settings, DNS server settings	When setting IPv4: Network > TCP/IP Network Setup Procedures > Protocol Settings > TCP/IPv4 Settings When setting IPv6: Network > TCP/IP Network Setup Procedures > Protocol Settings > TCP/IPv6 Settings
Proxy Settings	Network > TCP/IP Network Setup Procedures > Protocol Settings > Settings Common to TCP/IPv4 and TCP/IPv6
Fax number of the machine	Settings/Registration > Function Settings > Send > Specifying the Fax Settings > Fax Line Settings
Unit name of the machine	
Telephone line type	
System Manager Settings	Security > Restricting Access by Authentication > Specifying the System Manager Settings
Automatic Gradation Adjustment	Settings/Registration > Adjustment/Maintenance > Adjust Image Quality > Automatic Gradation Adjustment

NOTE

To change [Country/Region], you must change it from [Start Setup Guide] (Settings/Registration).

3

Before Using This Machine

Parts and Their Functions **30**
External View 30
Internal View 31
Feeder 32
Control Panel Parts and Functions 32

Main Power and Energy Saver Key **34**
How to Turn ON the Main Power 34
Energy Saver Key 35
Shutting Down the Machine 35

Backing Up/Exporting Data **36**
Data You Can Import/Export All 36
Data You Can Import/Export Individually 36
Other Data You Can Import/Export/Back Up 37

Parts and Their Functions

This section provides you with the names and functions of all the parts of the machine. For more information on optional products, parts and their functions, see e-Manual > Optional Products/Software.

External View

When the Staple Finisher-S1 and Cassette Feeding Unit-AH1 are attached. When the Copy Card Reader-F1 and Cassette Feeding Unit-AH1 are attached.

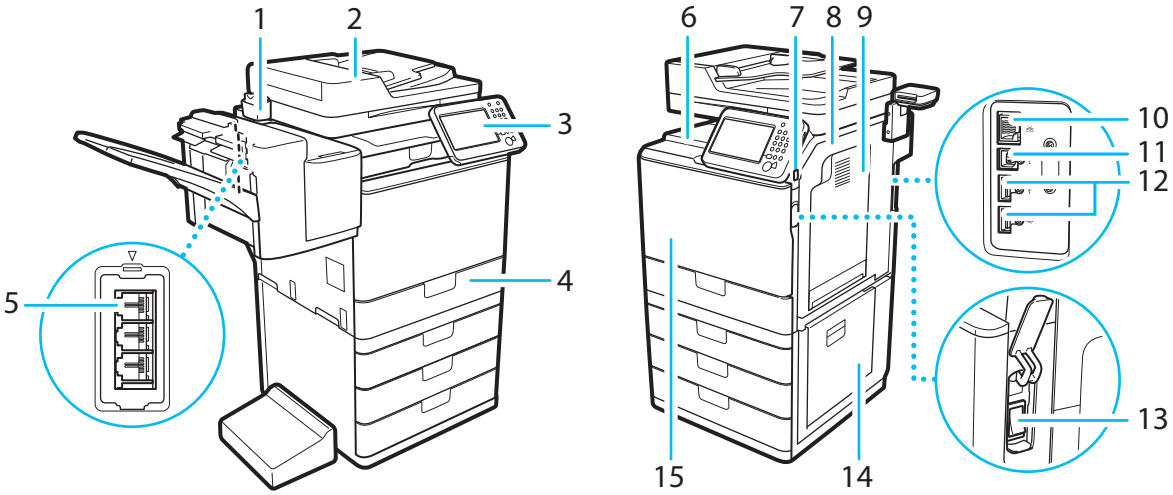

1 Glass Cleaning Sheet Storage Box
Use this box to store sheets for cleaning the platen glass.

2 Feeder
Originals placed in the feeder are automatically fed sheet by sheet to the scanning area. The feeder also automatically turns over two-sided originals to make one- or two-sided copies.

3 Control Panel
The control panel includes the keys, touch panel display, and indicators required for operating the machine. (See "Control Panel Parts and Functions," on p.32.)

4 Paper Drawer 1
Holds up to 550 sheets of paper (80 g/m^2).

5 LINE 1
Use this port to connect a fax line to the machine.

6 Output Tray
Prints are output to this tray if the optional Staple Finisher-S1 is not attached.

7 USB Port (1)
Use the USB port to connect USB memory, external hard disks, and other devices to the machine.

8 Right Cover of the Main Unit
Open this cover when clearing a paper jam inside the main unit. (See e-Manual > Problem Solving.)

9 Multi-Purpose Tray
Use the multi-purpose tray to feed paper manually, and for loading nonstandard paper stock, such as envelopes. (See e-Manual > Basic Operations.)

10 LAN Port
Use an Ethernet cable to connect the machine to a network.

11 USB Port (2)
Use the USB port to insert a USB cable for connecting to a computer.

12 USB Port (3)
Use the USB port to connect external hard disks and other devices to the machine.

13 Main Power Switch
Press to the "I" side to turn ON the machine. (See "Main Power and Energy Saver Key," on p.34.)

14 Right Cover of the Paper Drawer
Open this cover when clearing a paper jam. (See e-Manual > Problem Solving.)

15 Toner Code
This code indicates the type of genuine toner that can be used with the machine. Use toner with a code that includes the same letters as the code on the front cover of the machine.

Internal View

When the Copy Card Reader-F1 and Cassette Feeding Unit-AH1 are attached.

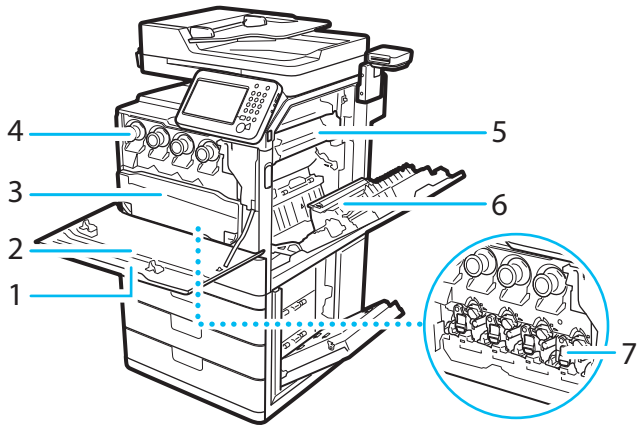

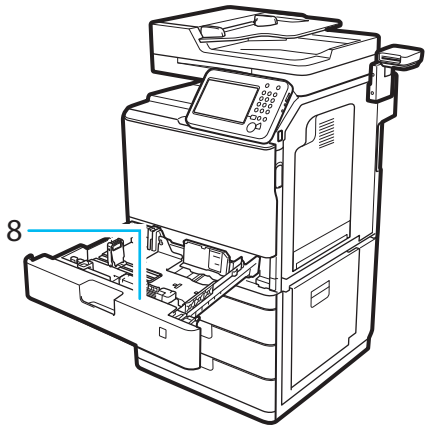

1 Front Cover of the Main Unit
Open this cover to replace the toner cartridge, the waste toner container, and the drum unit.

2 Dust Proof Glass Cleaner
Use this cleaner when cleaning the dust proof glass.

3 Waste Toner Container
When the waste toner container becomes full, replace it with a new one. (See "Replacing the Waste Toner Container," on p.49.)

4 Toner Cartridge
When toner runs out, pull out the toner cartridge and replace it with a new one. (See "Consumables," on p.54.)

5 Fixing Assembly
The unit that fixes toner onto paper. If paper is jammed in the fixing assembly, remove the fixing assembly from the machine and then carefully remove the jammed paper.

6 Duplexing Unit
If paper is jammed in the duplexing unit, remove the paper jam. (See e-Manual > Problem Solving.)

7 Drum Unit
The unit that applies toner to paper during printing. (See e-Manual > Maintenance.)

8 Envelope Feeder Attachment
Use when loading envelopes in a paper drawer. Envelope Feeder Attachment can only be used in Paper Drawer 1. For instructions on attaching the Envelope Feeder Attachment, see e-Manual > Maintenance.

Feeder

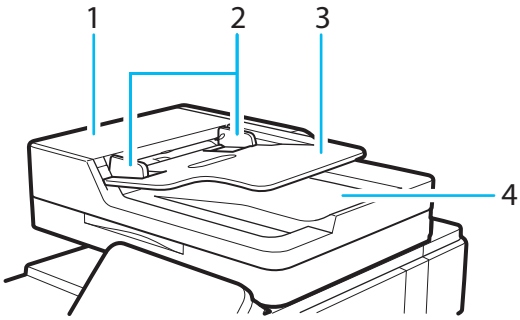

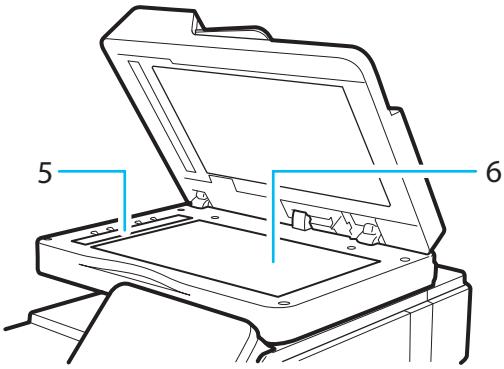

1 Feeder Cover
Open this cover to remove jammed paper.

2 Slide Guides
Adjust these guides to match the width of the original.

3 Original Supply Tray
Originals placed here are automatically fed sheet by sheet into the feeder. Place originals into this tray with the surface that you want to scan face up.

4 Original Output Area
Originals that have been scanned from the original supply tray are output into the original output area.

5 Document Feed Scanning Area
Originals placed in the feeder are scanned here.

6 Platen Glass
Place originals here when scanning books, heavyweight originals, transparencies, etc.

Control Panel Parts and Functions

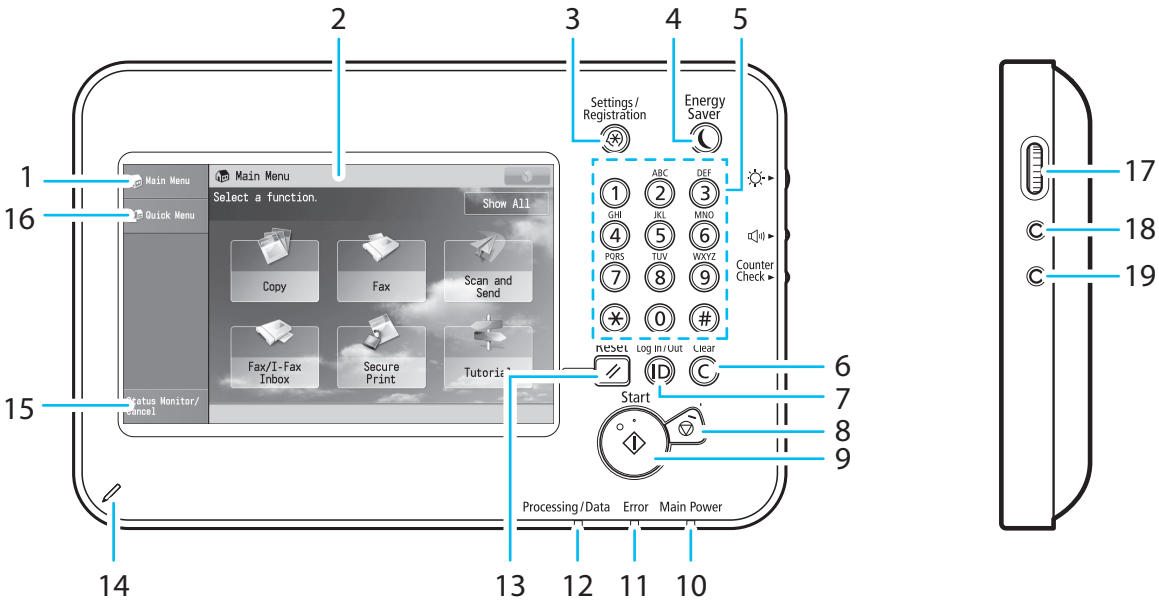

Control Panel Parts and Functions

1 [Main Menu]
Press to display the Main Menu screen. If the Main Menu screen is not displayed when using a function, it is necessary to press [Main Menu] before using the function.

2 Touch Panel Display
The settings screen for each function is shown on this display. Six function keys are displayed by default.

3 Settings/Registration key
Press to specify settings/registration.

4 Energy Saver key
Press to set or cancel the Sleep mode. Lights when the machine enters the Sleep mode. For more information on the Auto Sleep mode, see "Main Power and Energy Saver Key," on p.34.

5 Numeric keys
Press to enter numerical values.

6 Clear key
Press to clear entered values or characters.

7 ID (Log In/Out) key
Press to log in/out when a login service such as Department ID Management or SSO-H has been set.

8 Stop key
Press to stop a job in progress, such as a scan, copy, or fax (scanning only) job.

9 Start key
Press to start an operation.

10 Main Power Indicator
Lights when the main power is turned On.

11 Error Indicator
Flashes or lights if there is an error in the machine. When the Error indicator flashes, follow the instructions that appear on the touch panel display. When the Error indicator maintains a steady red light, contact your local authorized Canon dealer.

12 Processing/Data Indicator
Flashes or blinks green when the machine is performing operations, and maintains a steady green light when fax data is stored in memory.

13 Reset key
Press to restore the standard settings of the machine.

14 Edit Pen
Use when operating the touch panel display, such as to enter characters.

15 [Status Monitor/Cancel]
Press to check the status of jobs or to cancel print jobs. Also, you can check the status of the machine such as the amount of paper remaining in the paper source.

16 [Quick Menu]
Press to display functions registered in the Quick Menu.

17 Brightness Adjustment Dial
Use to adjust the brightness of the touch panel display.

18 Volume Settings key
Press to display the screen for adjusting settings, such as the transmission volume and fax sending/receiving alarm volume.

19 Counter Check key
Press to display the copy and print count totals on the touch panel display.

Adjusting the Angle of the Control Panel

The angle of the control panel is adjustable as shown below.

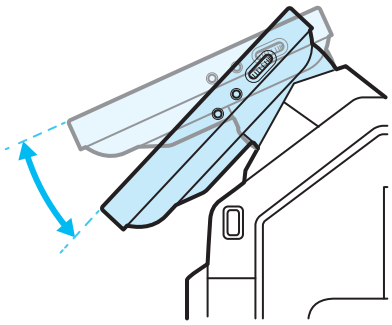

IMPORTANT

Do not apply excess force to the control panel when adjusting its angle.

Main Power and Energy Saver Key

This section describes how to use the main power switch and the Energy Saver key.

How to Turn ON the Main Power

Make sure that the power plug is firmly inserted into the power outlet.

WARNING

Do not connect or disconnect the power cord with wet hands, as this may result in electrical shock.

IMPORTANT

If you want to turn OFF the main power and then back ON again, wait for at least 10 seconds after the main power indicator is turned OFF before turning ON the main power. However, when [Quick Startup Settings for Main Power] is enabled, if you do not wait more than 20 seconds after the main power indicator is turned OFF, quick startup is not performed.

01 Press the switch to the "I" side to turn the main power ON.

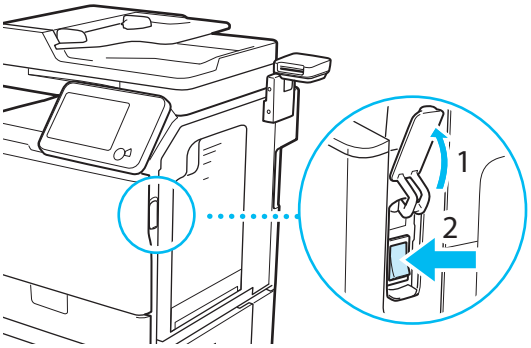

The main power indicator on the control panel lights when you turn ON the main power switch.

Various screens appear when system software is loading.

If you are using a login service, log in using the procedure for the login service you are using.

NOTE

- You can change the default display that appears after the machine is turned ON from [Default Screen after Startup/Restoration] on the Settings/Registration screen. (See e-Manual > Settings/Registration.)
- If this machine is connected to a powered off Macintosh computer by USB cable, the computer may turn on automatically when this machine does. In this case, disconnect the USB cable from the machine. You may also be able to solve this problem by using a USB hub between the machine and the Macintosh.
- The response of the buttons and keys may not be optimal immediately after you turn ON the main power of the machine.
- If you set [Quick Startup Settings for Main Power] to 'On' in [Preferences] (Settings/Registration), the tone sounds when turning ON the main power of the machine. (Depending on the situations, the machine does not startup quickly and the tone does not sound.)
- Depending on the conditions under which the machine is being used, the machine may not startup quickly if you set [Quick Startup Settings for Main Power] to 'On'. For more information, see e-Manual > Settings/Registration.
- If you are using Department ID Management with the Copy Card Reader-F1, see e-Manual > Optional Products/Software.
- If you are using Department ID Management, see e-Manual > Basic Operations.
- If you are using SSO-H, see e-Manual > Basic Operations.

Energy Saver Key

You can press (Energy Saver) to make the machine enter the Sleep mode and reduce power consumption.

If the machine is idle for a certain period of time, the machine will enter the Auto Sleep mode to minimize energy consumption.

Press (Energy Saver) to cancel the Sleep mode and resume normal machine operations.

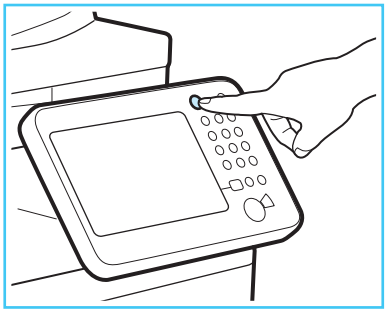

NOTE

The machine can receive and print documents from a personal computer when it is in the Sleep mode. I-fax and fax documents can also be received while the machine is in the Sleep mode.

Shutting Down the Machine

This machine performs a procedure to protect the memory when the machine is shut down.

This enables the machine to be shut down safely, even if there are any jobs being processed, or a MEAP application is running while the machine is shutting down.

01 Press the switch to the "⏻" side to turn the main power OFF.

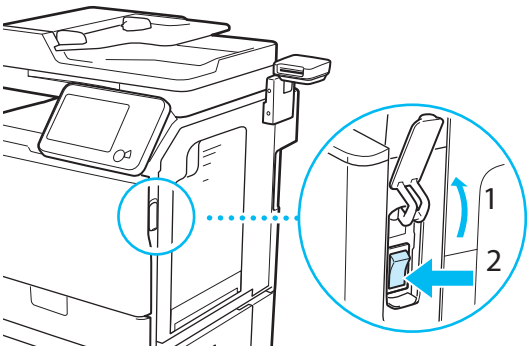

IMPORTANT

- Do not turn the main power OFF while using the Fax/I-Fax function. Sending or receiving I-fax or fax documents cannot be done when the main power is turned OFF.
- The machine may take some time to completely shutdown. Do not unplug the power cord until the main power indicator of the machine is OFF.
- If the main power is turned OFF during scanning or printing, a paper jam may occur.

NOTE

- If [Quick Startup Settings for Main Power] in [Preferences] (Settings/Registration) and [Sleep Mode Alert], which appears when you press on the control panel, are both set to 'On', the tone sounds when turning OFF the main power of the machine. (Depending on the situations, the machine does not startup quickly and the tone does not sound.)
- You can shut down the machine from the Remote UI using the Remote Shutdown mode. For more information, see e-Manual > Remote UI.

Backing Up/Exporting Data

Various data such as the received data, address book, and Settings/Registration settings are stored on the hard disk of the machine. A malfunction in the hard disk may cause these data to be lost. Please regularly back up/export your important data. Please note that Canon will not be held responsible for any damages caused by the loss of data. You can backup/export data in the following ways:

- Import/Export All
- Import/Export Individually

Data you can back up/export are described below.

Data You Can Import/Export All

You can save/load multiple items at once. In addition, you can exchange data with this machine and other machines which support the Import/Export All function.

IMPORTANT

You cannot use the Import All function, depending on the recipient's machine model. For more information, contact your local authorized Canon dealer.

Data	References
Settings/Registration Basic Information	e-Manual > Remote UI
Paper Type Management Settings	
Forwarding Settings	
Box Settings	
Department ID Management Settings	
Main Menu Settings	
Web Access Settings	
Favorite Settings	
Address Book	
Quick Menu Settings	
MEAP Application Setting Information	
User Setting Information	

Data You Can Import/Export Individually

You can save/load data individually. In addition, you can exchange data with this machine and other machines which do not support the Import/Export All function.

Data	References
Address Lists	e-Manual > Remote UI
Device Settings (Forwarding Settings, Address Book, Send Function Favorite Settings)	
Printer Settings	
Paper Information	
Web Access Favorites	e-Manual > Web Access

Other Data You Can Import/Export/Back Up

You can exchange data with this machine and other machines which do not support the Import/Export All function.

Data		References
Quick Menu Information		e-Manual > Quick Menu
Data Relating to MEAP	License files for MEAP applications	e-Manual > MEAP
	Data saved from MEAP applications*1	Instruction manuals for each MEAP application
	User authentication information registered for the Local Device Authentication system of SSO-H (Single Sign-On H)	e-Manual > MEAP

*1 You may be able to back up data stored by MEAP applications, depending on the application.

NOTE

- The passwords and PIN are backed up at the same time. However, some of the passwords may not be backed up, depending on the type of the password.
- If your machine is not connected to a network, it is recommended that you print and store important information such as the Address Book. (See e-Manual > Basic Operations.)

4

Routine Maintenance

Loading Paper **40**
- Loading Paper into a Paper Drawer 40
- Loading Envelopes 43
- Checking the Types of Paper That Can Be Used 43

Replacement Parts **44**
- Replacing the Staple Cartridge (Staple Finisher-S1) 45
- Replacing the Toner Cartridge 46
- Replacing the Waste Toner Container 49
- Replacing the Drum Unit 51

Consumables **54**
- Recommended Paper 54
- Toner 54
- Drum Unit 55
- Staple Cartridge 55

Loading Paper

If the selected paper runs out, or the selected paper drawer runs out of paper during printing, a screen prompting you to load paper appears on the touch panel display.

CAUTION

When handling paper, take care not to cut your hands on the edges of the paper.

Loading Paper into a Paper Drawer

When loading paper into the paper drawer for the first time, or when a message is displayed on the touch panel display prompting you to load paper, follow the procedure below.

IMPORTANT

- A screen prompting you to load paper also appears if the paper drawer is not fully inserted into the machine. Make sure that the paper drawer is properly in place.
- Do not load the following types of paper into the paper drawers. Doing so may cause a paper jam.
  - Severely curled or wrinkled paper
  - Thin straw paper
  - Paper which has been printed on using a thermal transfer printer
  - The reverse side of paper which has been printed on using a thermal transfer printer
- Fan the stack of paper well before loading it. Paper such as thin paper, recycled paper, pre-punched paper, and heavy paper should be fanned particularly well before loading it.
- Never place paper or any other items in the empty part of the drawer next to the paper stack. Doing so may cause paper jams.
- When you are printing in the Staple mode, do not remove the output sheets that are waiting to be stapled. (Printing and stapling resume after you clear the paper jam.)

NOTE

- Register the size and type of the loaded paper in [Paper Settings] in [Preferences] (Settings/Registration).
- You can use custom paper sizes. (See e-Manual > Settings/Registrations.)
- You can name, register, and edit custom paper types. (See e-Manual > Settings/Registrations.)
- Paper Drawer 2 can be used if the optional Cassette Feeding Unit-AG1 or the Cassette Feeding Unit-AH1 is attached.
- Paper Drawers 3 and 4 can be used if the optional Cassette Feeding Unit-AH1 is attached.
- For information on paper that can be loaded, see e-Manual > Basic Operations.
- If a message prompting you to load paper appears while printing, the remaining prints are automatically made after you load the correct paper. If you select a different paper drawer, the remaining prints are made after you press [OK].
- Press [Cancel] to cancel printing.

01 Grip the handle, and pull out the paper drawer until it stops.

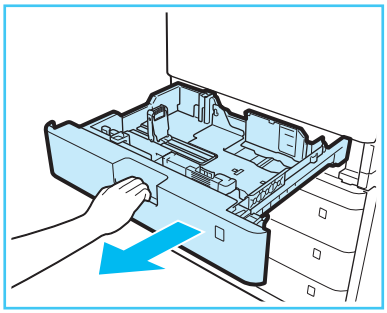

02 When loading paper into the paper drawer for the first time, or when changing the paper size, adjust the position of the paper drawer guides.

1. Slide the left guide while squeezing it on the top to align it with the mark for the desired paper size.
2. Slide the front guide while squeezing it on the top to align it with the mark for the desired paper size.

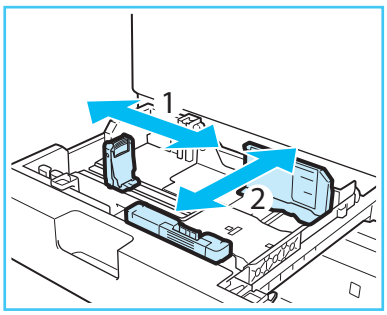

IMPORTANT

Slide the guides until they click into place. If the left guide and front guide are not aligned correctly, the paper size will not correctly appear on the touch panel display. It is also necessary to adjust the guides correctly to avoid causing a paper jam, dirty prints, or making the inside of the machine dirty.

NOTE

When using inch paper, remove the A4 Feeder Attachments attached to the paper drawer and store them in the storage space. When using A or B series paper, make sure to attach the A4 Feeder Attachments to the paper drawer. And then, select the paper series that you are going to use in [Paper Size Group for Auto Recog. in Drawer] (Settings/Registration). (See e-Manual > Settings/Registration.)

- A4

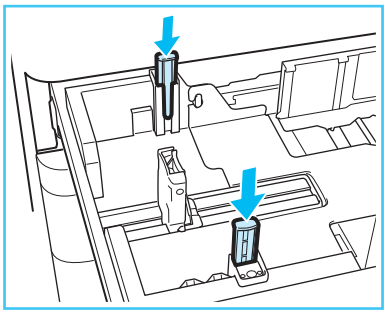

- LTR/LGL

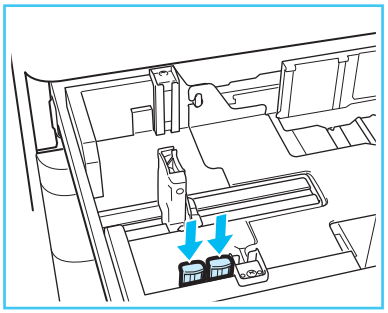

03 Prepare the paper to load.

Open the packaging for the paper and remove the paper stack.

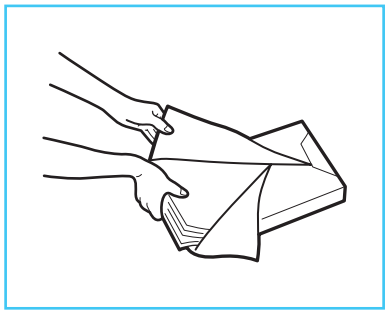

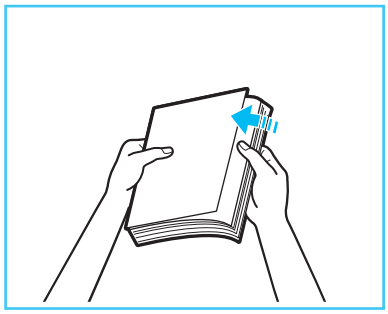

NOTE

- For high-quality printouts, use paper recommended by Canon.
- Before loading paper, always fan the sheets several times, and align the edges to facilitate feeding.

04 Load the paper stack into the paper drawer.

1. Make sure that the paper size setting of the paper drawer matches the size of the paper to load in the paper drawer.
2. Load the paper stack against the right wall of the paper drawer.
3. Gently push the paper drawer back into the machine.

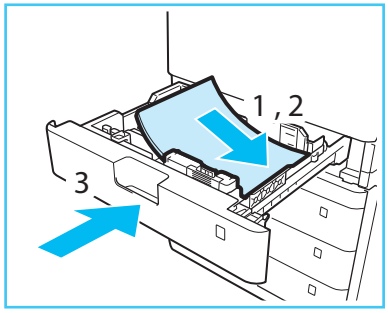

CAUTION

When returning the paper drawer to its original position, be careful not to get your fingers caught, as this may result in personal injury.

IMPORTANT

- Paper which is curled must be straightened out before loading it into the paper drawer.
- You will not be able to make copies or print if you load paper that exceeds the loading limit mark (▼▼▼), or if the paper drawer is not completely pushed into the machine.
- Make sure that the height of the paper stack does not exceed the loading limit mark (▼▼▼).
- Always check that the paper drawers are in place.

NOTE

- Each paper drawer holds up to 550 sheets of paper (80 g/m^2) or 640 sheets of paper (64 g/m^2).
- If there are instructions on the paper package about which side of the paper to load, follow those instructions.
- When the paper is loaded into the paper drawer, the side facing up is the one printed on.
- If problems, such as poor print quality or paper jams occur, try turning the paper stack over and reloading it.
- Rewrap any remaining paper in its original package, and store it in a dry place, away from direct sunlight.
- If paper runs out and printing is stopped, load a new paper stack. Printing restarts after the new paper stack is loaded.

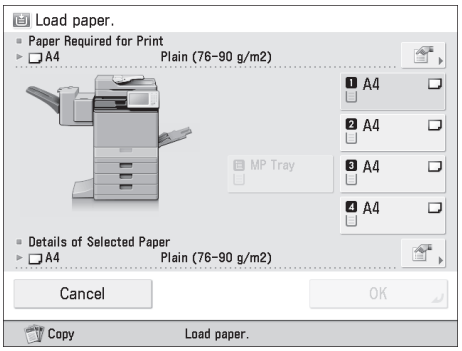

- If you print on the paper which has absorbed moisture, steam may come out from the output area of the machine. This is because the moist on the paper evaporates when the high temperature is applied when a toner is fixed to the paper. It is not a malfunction. (This especially happens in low room temperature.)

05 When loading paper into the paper drawer for the first time, or when changing the paper size, attach a paper size label to the paper drawer.

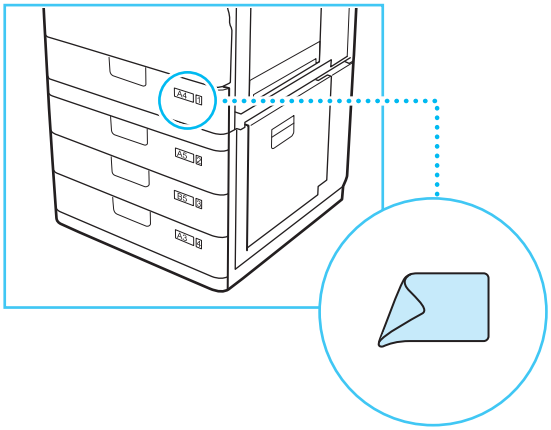

When not loading envelopes to a paper drawer, store the Envelope Feeder Attachment in the storage area of the paper drawer. For information on storing the Envelope Feeder Attachment, see "6 Storing the Envelope Feeder Attachment in a Paper Drawer," on p.16.

IMPORTANT

The paper size labels included with the machine contain paper sizes not supported by the machine.

06 If the paper has been changed, register the size and type of the loaded paper.

Register the size and type of paper you loaded in the paper drawer in [Paper Settings] in [Preferences] (Settings/Registration). For more information, see e-Manual > Settings/Registration.

Loading Envelopes

If you are loading envelopes, the Envelope Feeder Attachment that comes with the paper drawer must be attached. For instructions on loading envelopes, see e-Manual > Maintenance.

Checking the Types of Paper That Can Be Used

For more information on the types of paper you can use, see e-Manual > Basic Operations.

Replacement Parts

This section describes those parts that require replacement and their model numbers. Use a replacement part after checking its model number.

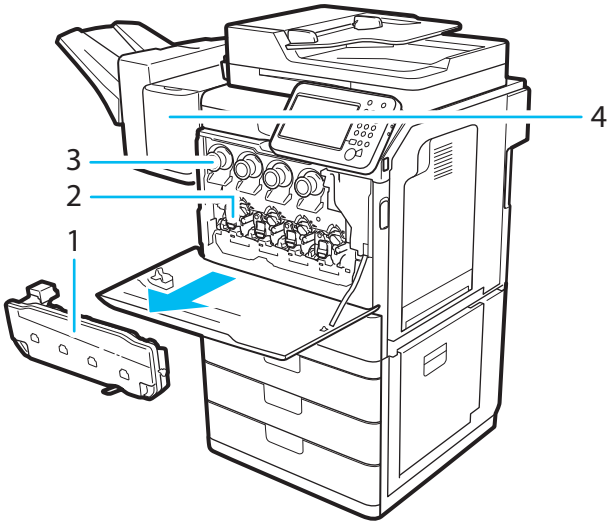

1 Waste Toner Container
Model Number: WT-201

2 Drum Unit
Model Number:

Canon NPG-65 Drum Unit Black

Canon NPG-65 Drum Unit Cyan

Canon NPG-65 Drum Unit Magenta

Canon NPG-65 Drum Unit Yellow

3 Toner Container
Model Number:

Canon NPG-65 Toner Black

Canon NPG-65 Toner Cyan

Canon NPG-65 Toner Magenta

Canon NPG-65 Toner Yellow

4 Staple Cartridge
Model Number: Staple-P1

For instructions on replacing parts 1, 2, 3, and 4, see the following page.

Replacing the Staple Cartridge

(Staple Finisher-S1)

This section describes how to replace the staple case and staple cartridge in the stapler unit. When the Staple Finisher-S1 is almost out of staples and the staple cartridge must be replaced, a screen prompting you to replace the staple cartridge appears on the touch panel display. Follow the procedure described below to replace the staple cartridge.

NOTE

- The Staple Finisher-S1 is an optional product.
- We recommend that you order staple cartridges from your local authorized Canon dealer before your stock runs out.
- Use only staple cases intended for use with this machine.

01 Open the front cover of the finisher.

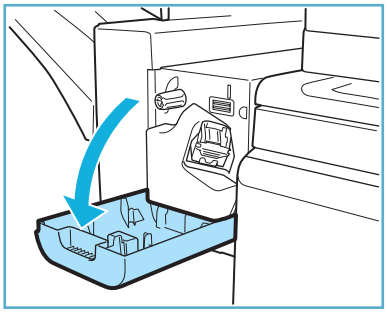

02 Grasp the staple case by the green tab to pull it out from the stapler unit.

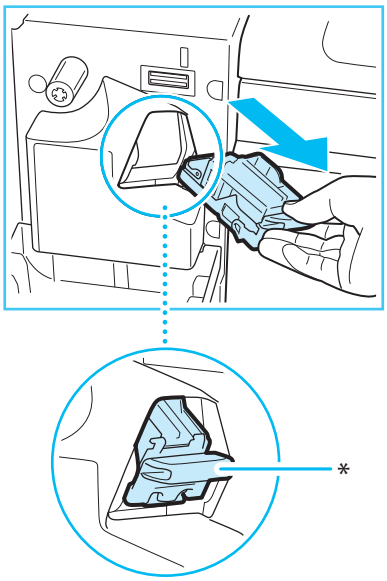

* Staple Case

03 Squeeze and lift the empty staple cartridge by its sides marked with arrows to remove it from the staple case.

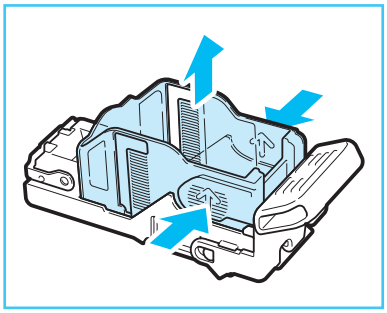

NOTE

You can lift the staple cartridge only when no staples are left inside the cartridge.

04 Insert a new staple cartridge into the staple case.

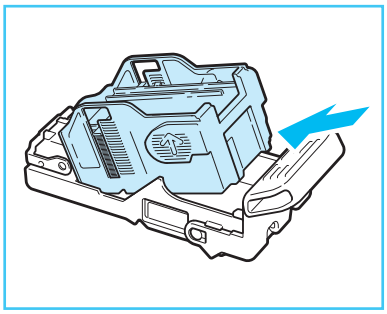

IMPORTANT

- Use only staple cartridges designed for use with this machine. (See "Consumables," on p.54.)
- Only one staple cartridge can be inserted at a time.

05 Return the staple case to its original position in the stapler unit.

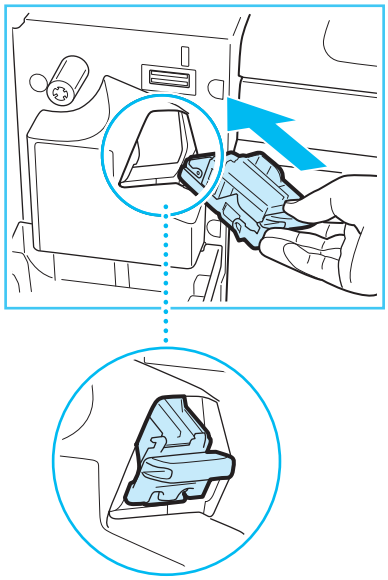

06 Close the front cover of the finisher.

CAUTION

When closing the front cover of the finisher, be careful not to get your fingers caught, as this may result in personal injury.

NOTE

After the cover is closed, the stapler unit may automatically perform a "dry" stapling operation to reposition the staples.

Replacing the Toner Cartridge

When there is only a small amount of toner remaining inside the machine, a message appears on the touch panel display. You can continue printing, but at this time you should purchase a new toner cartridge to have it available when needed.

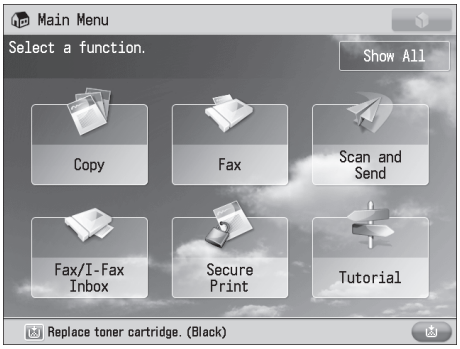

When the Black toner or all of the toners run out completely and prints can no longer be made, a screen with instructions on how to replace the toner cartridge appears on the touch panel display. Follow the procedure described below to replace the toner cartridge.

If you press [Close], you can continue operations, such as setting modes and scanning originals, even if you do not replace the toner cartridge immediately.

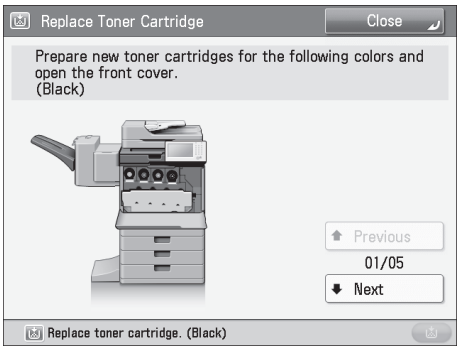

WARNING

- Do not burn or throw used toner cartridges into open flames, as this may cause the toner to ignite, resulting in burns or a fire.
- If you accidentally spill or scatter toner, carefully wipe up the loose toner with a damp, soft cloth and avoid inhaling any toner dust. Do not use a vacuum cleaner that is not equipped with safety measures to prevent dust explosions to clean up loose toner. Doing so may cause damage to the vacuum cleaner or result in a dust explosion due to static discharge.

CAUTION

- Keep toner out of the reach of small children.
- If toner is ingested, consult a physician immediately.
- If toner gets onto your hands or clothing, wash it off immediately with cold water. Washing it off with warm water will set the toner, and make it impossible to remove the toner stains.

IMPORTANT

- Use only toner cartridges intended for use with this machine.
- For information on the supported Canon genuine toner, see "Replacement Parts," on p.44.
- Do not replace toner cartridges until the message prompting you to do so appears.
- Do not attempt to replace the toner cartridge while the machine is printing.
- The color of the toner to be replaced is displayed on the touch panel display. If multiple toner cartridges must be replaced, replace the toner cartridges in the following order: Black, Yellow Magenta, Cyan.
- If you continue copying or printing in black-and-white after cyan, magenta, or yellow toner runs out, do not remove the depleted toner cartridges from the machine.
- You can set the machine to display a message indicating that the remaining toner is low. (See e-Manual > Settings/Registrations.)

NOTE

- Complete instructions on how to replace the toner cartridge can be accessed by pressing [Previous] or [Next] on the touch panel display.
- If toner runs out during a print job, the remaining prints are made after you replace the toner cartridge.
- If black toner is left, you can continue copying and printing in black-and-white.
- After replacing toner cartridges, if printed colors are different from the colors printed before you replaced the toner cartridges, perform [Auto Adjust Gradation] in [Adjustment/Maintenance]. (See e-Manual > Settings/Registrations.)

01 Press .

NOTE

If the Black toner or all of the toners run out, this step is not necessary.

02 Remove the toner cartridge of the displayed color.

1. Open the front cover of the main unit.
2. Pull out the toner cartridge to replace.

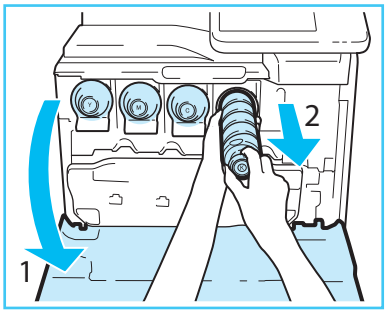

Pull the toner cartridge out halfway, and then remove it completely while supporting it and keeping it straight with your other hand from underneath.

WARNING

Do not burn or throw used toner cartridges into open flames, as this may cause the toner remaining inside the cartridges to ignite, resulting in burns or a fire.

IMPORTANT

Do not subject the toner cartridge to shock or hit it. Doing so may cause the toner cartridge to leak.

03 Prepare the new toner cartridge.

1. Open the package of the toner cartridge, and remove the toner cartridge.

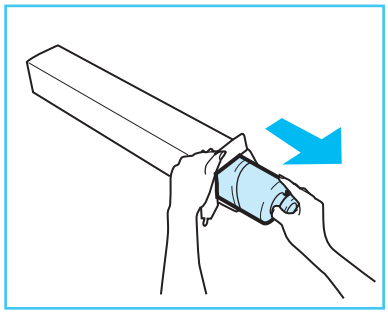

2. Hold the new toner cartridge in both hands as shown in the illustration, and shake it vertically approximately 10 times.

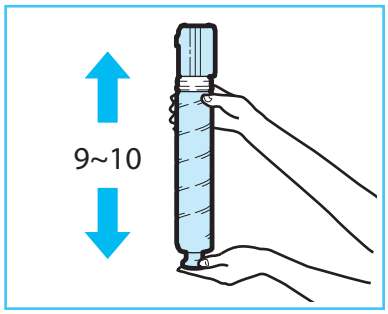

IMPORTANT

Do not shake the toner cartridge in the direction shown in the illustration. Doing so may cause the toner to not output properly.

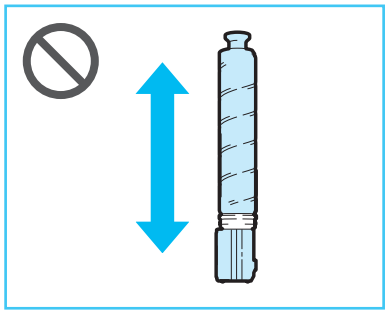

04 Insert the new toner cartridge.

1. Match the new toner cartridge with the slot on the main unit as shown in the illustration.
2. Push the new toner cartridge in as far as possible.

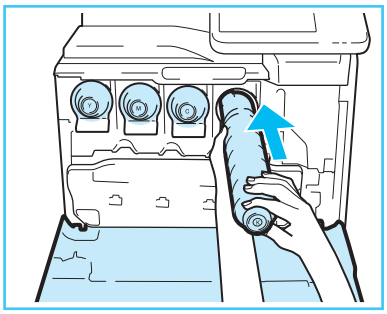

NOTE

Support the new toner cartridge with your hand from underneath while pushing it into the machine with your other hand.

05 Close the front cover of the main unit.

CAUTION

When closing the cover, be careful not to get your fingers caught, as this may result in personal injury.

If the Following Screen Is Displayed after Replacing the Toner Cartridge

After replacing the toner cartridge, the following screen may appear.

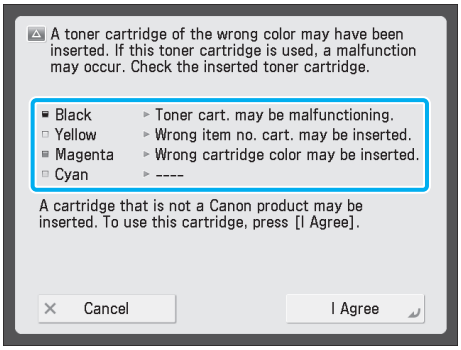

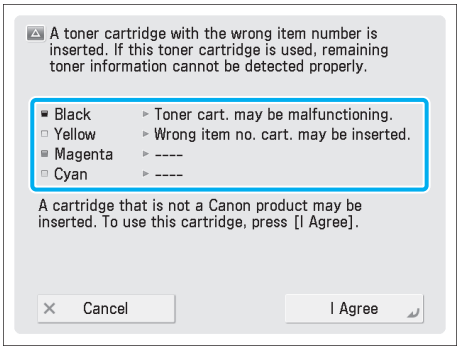

The status of each of the toner cartridges attached to the machine is displayed in the enclosed area of the screen, shown above.

Message	Status
Wrong cartridge color may be inserted.	A toner cartridge of the wrong color is inserted.
Wrong item no. cart. may be inserted.	A toner cartridge with the wrong model number is inserted.
Toner cart. may be malfunctioning.	The inserted toner cartridge may have been damaged.
----	The correct toner cartridge is inserted.

To continue using the toner cartridge, press [I Agree]. If you select this option, the operation of the machine is not guaranteed.

To replace the toner cartridge, press [Cancel].

If you are not sure about the remedies, contact your local authorized Canon dealer from which you purchased the toner cartridge.

Replacing the Waste Toner Container

When the waste toner container nears capacity, a message appears on the touch panel display. In this case, you should prepare a new waste toner container.

Even if you do not replace the waste toner container immediately, you can perform printing for a while. The number of prints you can make depends on the content you print.

When the waste toner container is full, a screen with instructions on how to replace the waste toner container appears on the touch panel display. Follow the procedure described below to replace the waste toner container.

WARNING

- Do not burn or throw used waste toner containers into open flames. Also, do not store waste toner containers in places exposed to open flames, as this may cause the toner to ignite, resulting in burns or a fire.
- If you accidentally spill or scatter toner, carefully wipe up the loose toner with a damp, soft cloth and avoid inhaling any toner dust. Do not use a vacuum cleaner that is not equipped with safety measures to prevent dust explosions to clean up loose toner. Doing so may cause damage to the vacuum cleaner or result in a dust explosion due to static discharge.

CAUTION

- If toner is ingested, consult a physician immediately.
- If toner gets onto your hands or clothing, wash it off immediately with cold water. Washing it off with warm water will set the toner, and make it impossible to remove the toner stains.

IMPORTANT

- Your local authorized Canon dealer will dispose of used waste toner containers.
- Used toner cannot be reused. Do not mix new and used toner together.
- Use only waste toner containers intended for use with this machine.
- Do not replace the waste toner container before the message prompting you to replace it appears on the touch panel display.

NOTE

- Complete instructions on how to replace the waste toner container can be accessed by pressing [Previous] or [Next] on the touch panel display.
- If the waste toner container must be replaced during a print job, the remaining prints are made after the new waste toner container is installed.

01 Remove the waste toner container.

1. Open the front cover of the main unit.
2. Pull out the waste toner container.

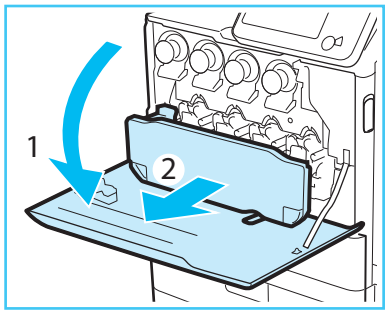

CAUTION

When removing the waste toner container, do not tilt it. If you tilt the waste toner container, toner will spill out.

02 Prepare a new waste toner container, and store the removed waste toner container.

1. Take the new waste toner container out of the box.

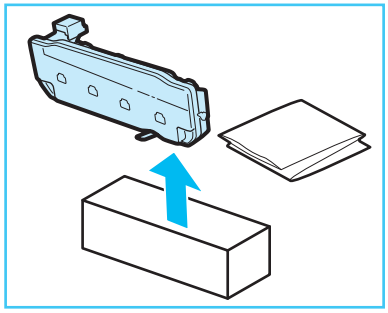

2. Insert the removed waste toner container into a bag, close and tie the bag so that the toner does not spill out, and then put the bag in a box.

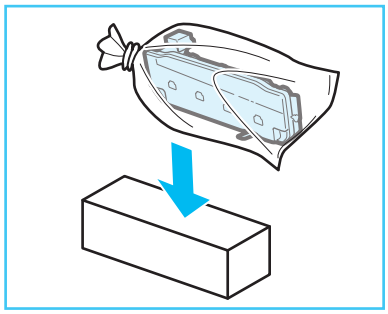

NOTE

- Use the bag in the box for the new waste toner container.
- Place the removed waste toner container on a level surface. If the waste toner container is tilted too far, toner may spill out.

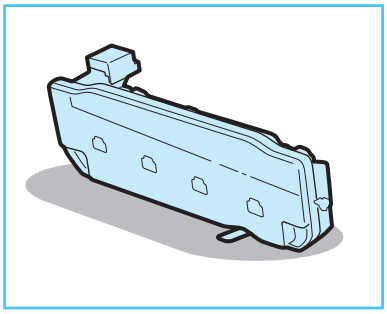

03 Insert the new waste toner container into the main unit.

1. Align the mark on the waste toner container and the mark on the slot of the main unit, and insert the waste toner container.
2. Close the front cover of the main unit.

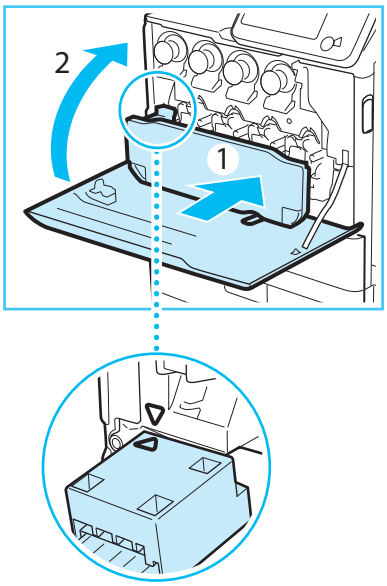

CAUTION

When closing the front cover of the main unit, be careful not to get your fingers caught, as this may result in personal injury.

Replacing the Drum Unit

When the drum unit approaches the end of its service life and needs to be replaced, a message appears on the touch panel display. Follow the procedure described below to replace the drum unit.

IMPORTANT

- For high-quality printouts, when replacing the drum unit we recommend using a Canon drum unit.
- Store drum units in a location away from light sources such as direct sunlight.
- Storing the drum unit in a room that is cold but rapidly heated, or has other rapid temperature changes, causes water droplets (condensation) to form inside it.
- Do not remove the orange protective cover until you insert the drum unit into the machine.

NOTE

- Complete instructions on how to replace the drum unit can be accessed by pressing [Previous] or [Next] on the touch panel display.
- Depending on your contract, a message prompting you to replace the drum unit may appear on the bottom of the touch panel display.

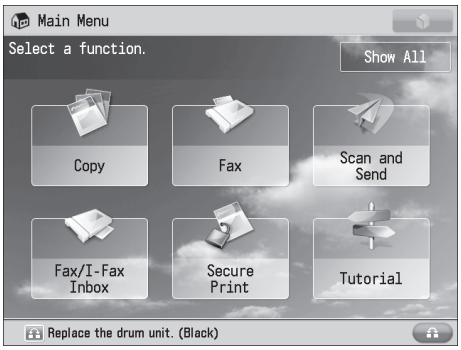

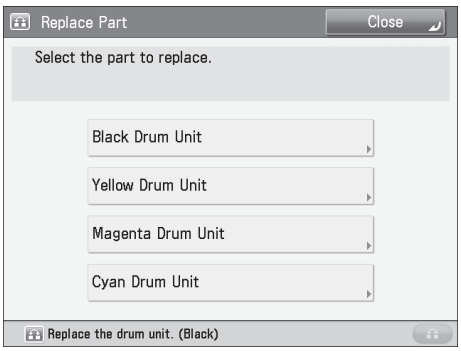

- When you finish replacing the drum unit, press [Close].

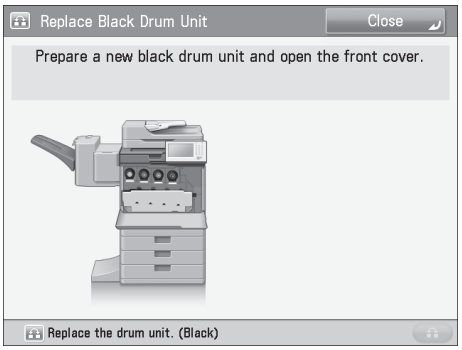

01 Remove the waste toner container.

1. Open the front cover of the main unit.
2. Pull out the waste toner container.

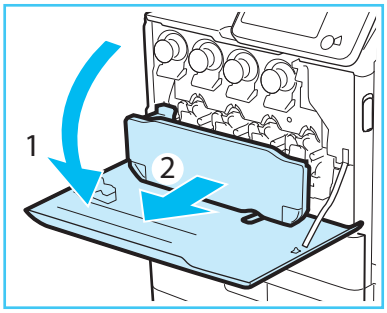

IMPORTANT

Place the removed waste toner container on a level surface. If the waste toner container is tilted too far, toner may spill out.

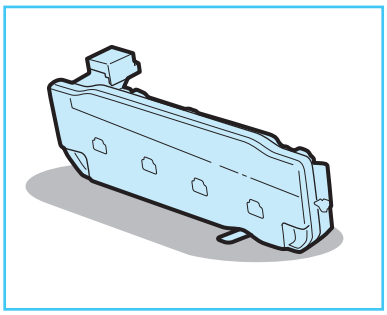

02 Pull out the drum unit to replace.

1. Grip the handle of the drum unit to replace, and pull it out.

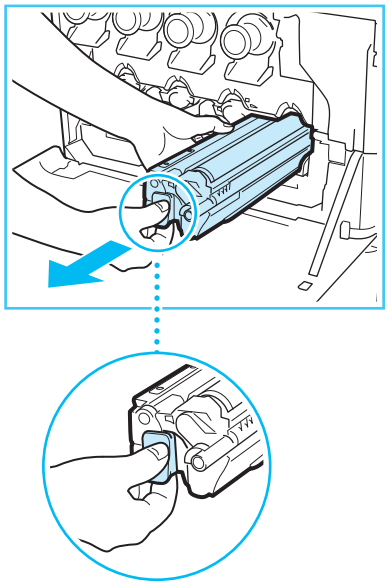

2. Pull the drum unit out of the main unit about halfway, and then pull it out all the way while supporting the indented area with your other hand.

IMPORTANT

Do not tilt the removed drum unit too far. Doing so may cause toner to spill out.

03 Prepare to insert the new drum unit.

1. Remove the new drum unit from its box.

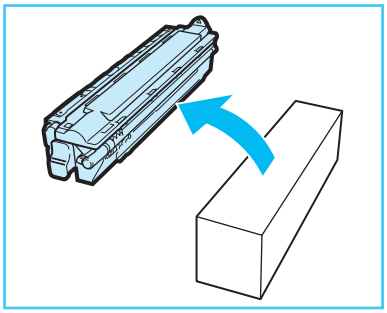

2. Hold the drum unit horizontally in both hands as shown in the illustration, and tilt it to the left and right approximately 12 times.

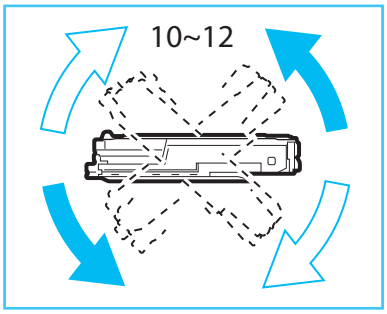

IMPORTANT

Do not remove the orange protective cover until you insert the drum unit into the machine.

04 Insert the new drum unit.

1. Grip the handle and indented area of the drum unit, and insert the drum unit while aligning the mark on the drum unit with the mark on the slot of the main unit.

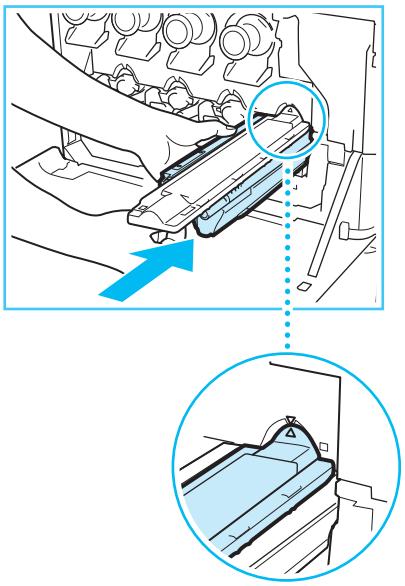

2. Remove the protective cover after the drum unit is completely inserted.

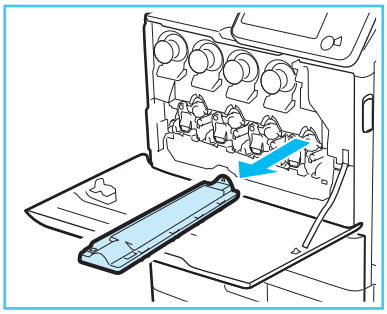

IMPORTANT

When you insert the drum unit into the main unit, the orange protective cover remains. Remove the protective cover after the drum unit is completely inserted.

05 Insert the waste toner container into the main unit.

1. Align the mark on the waste toner container and the mark on the slot of the main unit, and insert the waste toner container.
2. Close the front cover of the main unit.

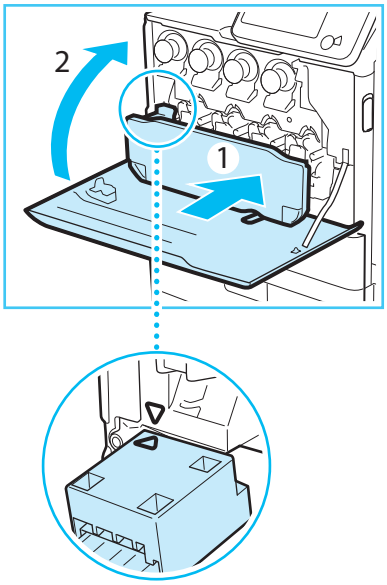

CAUTION

When closing the front cover of the main unit, be careful not to get your fingers caught, as this may result in personal injury.

Consumables

The following consumables are available from Canon. For more information, contact your local authorized Canon dealer. We recommend that you order paper stock and toner from your local authorized Canon dealer before your stock runs out.

Recommended Paper

In addition to plain paper (A4, A5 and B5 sizes), recycled paper, color paper, transparencies, labels, and other types of paper stock are available.

CAUTION

Do not store paper in places exposed to open flames, as this may cause the paper to ignite, resulting in burns or a fire.

IMPORTANT

- Some commercially available paper types are not suited for this machine. Contact your local authorized Canon dealer when you need to purchase paper.
- To prevent moisture build-up, tightly wrap any remaining paper in its original package for storage.

NOTE

For high-quality printouts, use paper recommended by Canon.

Toner

Confirm that the code on the front cover of the machine and the one on the package of the genuine toner are the same.

NPG

If a message prompting you to replace the toner cartridge appears on the touch panel display, replace the used toner cartridge of the displayed color with a new one.

Toner comes in four colors: black, cyan, magenta, and yellow.

Check the toner color that you need to replace before ordering toner from your local authorized Canon dealer. Also, when replacing the toner cartridge, make sure that you replace toner of the correct color.

Use only toner cartridges intended for use with this machine.

For optimum print quality, using Canon genuine toner is recommended.

For information on the dedicated toner cartridge model numbers for this machine, see "Replacement Parts," on p.44.

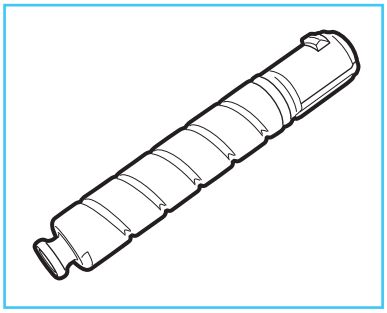

WARNING

- Do not burn or throw used toner cartridges into open flames, as this may cause the toner remaining inside the cartridges to ignite, resulting in burns or a fire.
- Do not store toner cartridges in places exposed to open flames, as this may cause the toner to ignite, resulting in burns or a fire.
- If you accidentally spill or scatter toner, carefully wipe up the loose toner with a damp, soft cloth and avoid inhaling any toner dust. Do not use a vacuum cleaner that is not equipped with safety measures to prevent dust explosions to clean up loose toner. Doing so may cause damage to the vacuum cleaner or result in a dust explosion due to static discharge.

CAUTION

- Keep toner out of the reach of small children.
- If toner is ingested, consult a physician immediately.

IMPORTANT

- Store toner cartridges in a cool location, away from direct sunlight. (The recommended storage conditions are temperatures below 30°C and humidity below 80%.)
- Do not store toner cartridges in an upright position.
- [Be careful of counterfeit toners]
  Please be aware that there are counterfeit Canon toners in the marketplace. Use of counterfeit toner may result in poor print quality or machine performance. Canon is not responsible for any malfunction, accident or damage caused by the use of counterfeit toner.
  For more information, see canon.com/counterfeit.

Drum Unit

When you replace the drum unit with a new one, be sure to use only drum units intended for use with the machine.

For optimum print quality, using Canon genuine drum unit is recommended.

For information on the drum unit model numbers for this machine, see "Replacement Parts," on p.44.

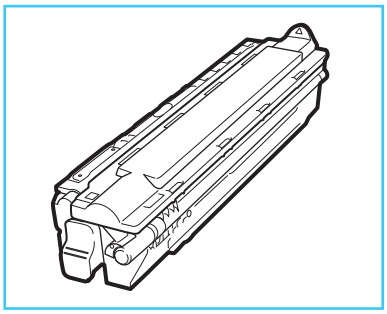

CAUTION

For cardiac pacemaker users:
This drum unit emits low level magnetic flux. If you use a cardiac pacemaker and feel abnormalities, please move away from the drum unit, and consult a physician.

Staple Cartridge

For information on the staple cartridge model numbers for this machine, see "Replacement Parts," on p.44.

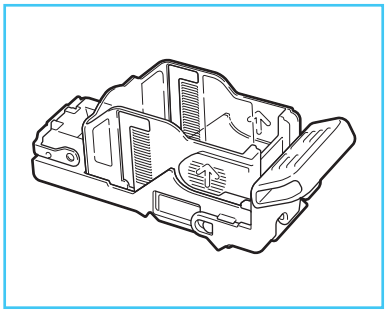

5

Troubleshooting

Routine Cleaning 58
Originals Cannot Be Scanned Properly (Cleaning the Platen Glass) 59
Scanned Originals Become Dirty (Manual Feeder Cleaning) 59
When White Streaks Appear on Prints (Cleaning the Dust Proof Glass) 60

When an Error Message/Error Code Is Displayed 62
When an Error Message Is Displayed 62
When an Error Code Is Displayed 62

Service Call Message 63
Contacting Your Local Authorized Canon Dealer 64
Setting the Limited Functions Mode from the Service Call Message Screen 64
Functions Available When the Printer/Scanner Cannot Be Used Due to an Error 65

Locations of Staple/Paper Jams 66

Routine Cleaning

If an original is not copied clearly, clean the platen glass, the underside of the feeder, the document feed scanning area, and the rollers of the feeder. For high-quality printouts, we recommend cleaning these parts once or twice a month.

The proper cleaning method for various cases is shown by the marks below.

Case	Type of Substance	Cleaning Method
Case 1	Adhesive and other easy to remove substances	Clean the machine with the glass cleaning sheet included with the machine.
Case 2	Ink and other difficult to remove substances	Clean the machine with a cloth which is wrung after being dampened in water, and then wipe it clean with a soft, dry cloth.
Case 3	Stains that cannot be removed with a wet cloth	Clean the machine with a cloth dampened with a mild detergent mixed with water, and then wipe it clean with a soft, dry cloth.

WARNING

- When cleaning the machine, first turn Off the main power switch, and disconnect the power cord. Failure to observe these steps may result in a fire or electrical shock.
- Disconnect the power cord from the power outlet regularly, and clean the area around the base of the power plug's metal pins and the power outlet with a dry cloth to ensure that all dust and grime is removed. If the power cord is connected for a long period of time in a damp, dusty, or smoky location, dust can build up around the power plug and become damp. This may cause a short circuit and result in a fire.

IMPORTANT

- When cleaning with a cloth, do not dampen the cloth too much, as this may damage the original or break the machine.
- Do not use alcohol, benzene, paint thinner, or other solvents for cleaning. Doing so may result in damage to the plastic parts.

Originals Cannot Be Scanned Properly

(Cleaning the Platen Glass)

If the platen glass or the underside of the feeder is dirty, the original may not be scanned clearly. Clean the platen glass and the underside of the feeder by following the procedure below.

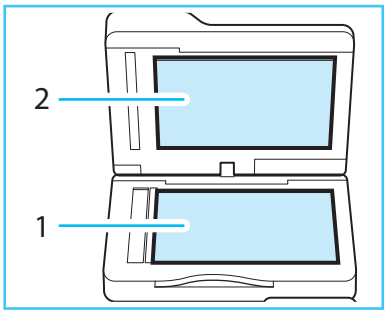

1. Clean the platen glass.

2. Clean the underside of the feeder.

NOTE

- If stains will not come out, use detergent instead of water.
- When the glass cleaning sheet is dirty, rinse it with water and spread it out to let it dry.

Scanned Originals Become Dirty

(Manual Feeder Cleaning)

If originals that have been fed through the feeder have streaks or appear dirty, clean the feed rollers.

IMPORTANT

Spin the rollers while cleaning them.

01 Clean the rollers of the feeder.

1. Open the feeder cover.
2. Clean the rollers (a total of two places) inside the feeder cover.

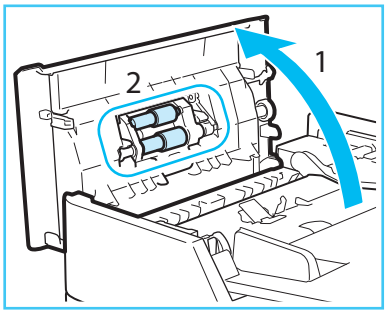

02 Clean the inside of the inner cover of the feeder.

1. Open the inner cover of the feeder.
2. Clean the transparent plastic (a total of two places).

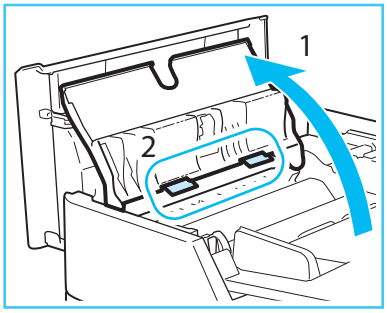

3. Close the inner cover of the feeder.

CAUTION

When closing the inner cover of the feeder, be careful not to get your fingers caught, as this may result in personal injury.

03 Clean the document feed scanning area (thin glass strip) and the white plate.

1. Open the feeder.
2. Clean the document feed scanning area.

3. Clean the white plate.

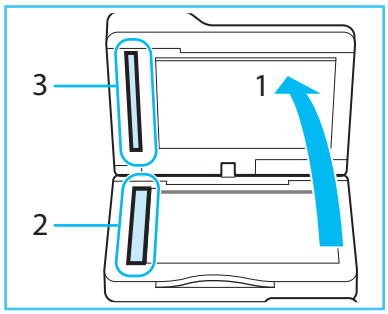

4. Close the feeder.

CAUTION

When closing the feeder, be careful not to get your fingers caught, as this may result in personal injury.

NOTE

When the glass cleaning sheet is dirty, rinse it with water and spread it out to let it dry.

04 Close the feeder cover.

CAUTION

When closing the feeder cover, be careful not to get your fingers caught, as this may result in personal injury.

When White Streaks Appear on Prints

(Cleaning the Dust Proof Glass)

When white streaks or other print defects occur, the dust proof glass may be dirty. Follow the procedure below to clean the dust proof glass.

01 Open the front cover of the main unit.

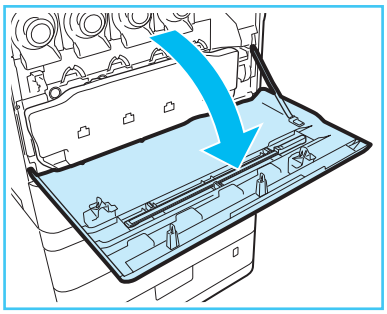

02 Remove the dust proof glass cleaner from the rear side of the front cover of the main unit.

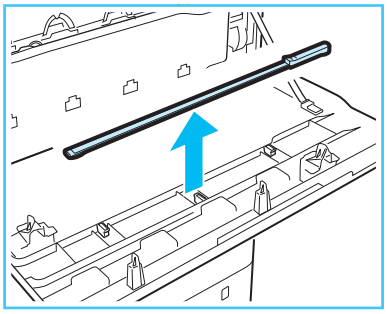

03 Hold the dust proof glass cleaner so that the pad on the tip is facing down, insert it in the locations shown on the illustration until it stops, and then move it gently back and forth.

Clean the four locations as shown below. There are marks on the main unit that indicate the cleaning locations. Check these marks when cleaning the dust proof glass.

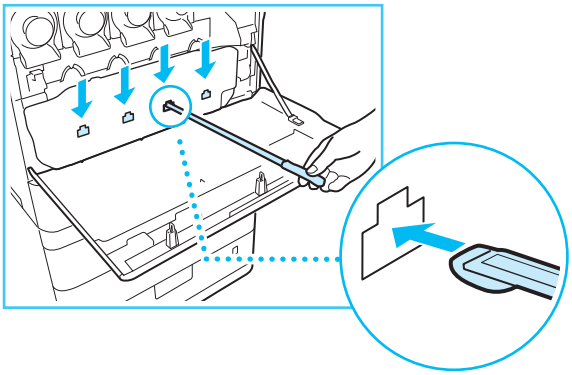

04 When you have finished cleaning the dust proof glass, gently push the dust proof glass cleaner back onto the rear side of the front cover of the main unit.

Place the dust proof glass cleaner back on the rear side of the front cover of the main unit with its tip facing the left direction.

05 Close the front cover of the main unit.

CAUTION

When closing the front cover of the main unit, be careful not to get your fingers caught, as this may result in personal injury.

When an Error Message/Error Code Is Displayed

When an Error Message Is Displayed

Error messages may appear on the touch panel display of the machine or the Web browser. Self-diagnostic error messages appear in the following cases:

- When scanning or printing cannot be performed because of an operational error
- When you need to make a decision or take some action during scanning or printing
- When you need to make a decision or take some action while browsing the network

For information on error messages and instructions on resolving errors, see e-Manual > Problem Solving.

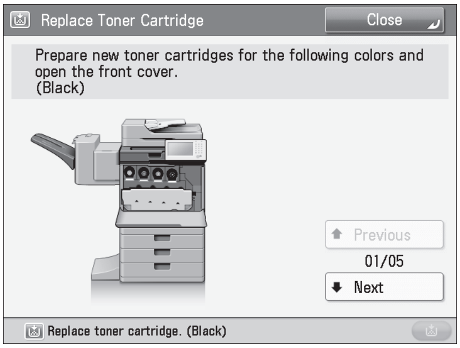

Example of an Error Message on the Touch Panel Display

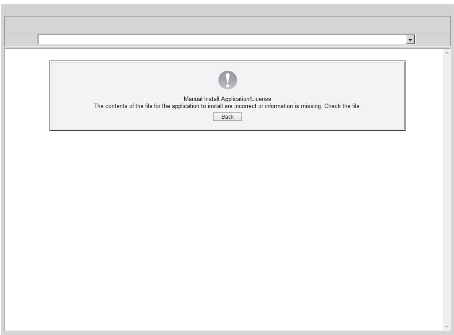

Example of an Error Message on the Web Browser

When an Error Code Is Displayed

If a job or operation does not complete successfully, the error code is displayed on the Details screen for Log on the Status Monitor/Cancel screen. You can check the error code in the following locations:

Details screen for Log on the Status Monitor/Cancel screen:

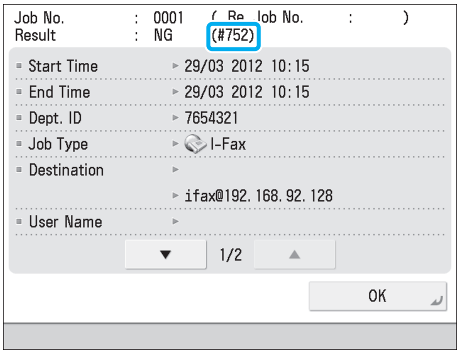

Results row of the Device Information Communication Log

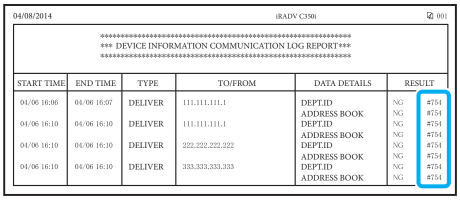

04/08/2014 iRADV C350i 001

*** DEVICE INFORMATION COMMUNICATION LOG REPORT***

START TIME	END TIME	TYPE	TO/FROM	DATA DETAILS	RESULT	
04/06 16:06	04/06 16:07	DELIVER	111.111.111.1	DEPT.ID	NG	#754
				ADDRESS BOOK	NG	#754
04/06 16:10	04/06 16:10	DELIVER	111.111.111.1	DEPT.ID	NG	#754
				ADDRESS BOOK	NG	#754
04/06 16:10	04/06 16:10	DELIVER	222.222.222.222	DEPT.ID	NG	#754
				ADDRESS BOOK	NG	#754
04/06 16:10	04/06 16:10	DELIVER	333.333.333.333	DEPT.ID	NG	#754
				ADDRESS BOOK	NG	#754

If an error occurs during a send, receive, or fax job, the error code is printed. For information on error codes and instructions on resolving errors, see e-Manual > Problem Solving.

Service Call Message

If a malfunction occurs and the machine cannot operate normally, a screen prompting you to contact your local authorized Canon dealer is displayed. If a screen such as the one below is displayed, contact your local authorized Canon dealer. (See "Contacting Your Local Authorized Canon Dealer" on p. 64.)

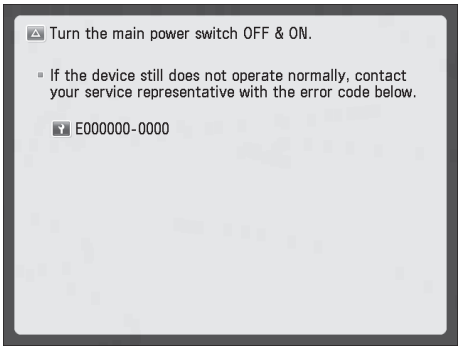

When [Limited Func. Mode] is displayed:

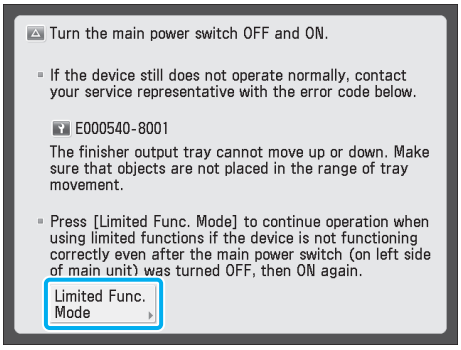

If [Limited Func. Mode] is displayed, you can temporally set the Limited Functions Mode to continue to use the machine until the cause of the malfunction is cleared. (See "Setting the Limited Functions Mode from the Service Call Message Screen," on p.64.)

If a screen such as the one above is displayed and the print or scan function does not operate normally, some functions may still be available.

When the Print or Scan function does not operate normally:

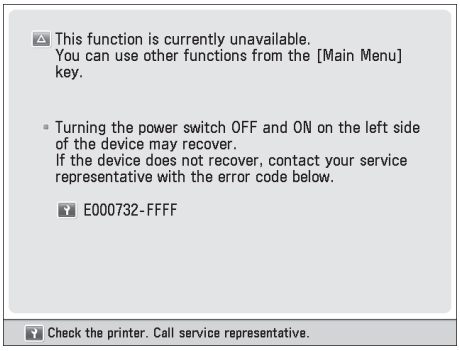

The selected function cannot be used. Press [Main Menu] to return to the Main Menu

When a service call message is displayed on the bottom of the screen:

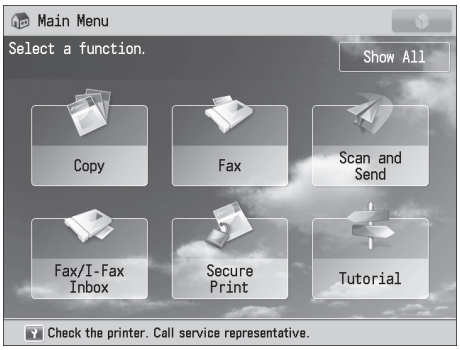

Even if a message prompting you to call your service representative appears on the bottom of the screen, some functions may still be available.

For more information on the available functions, see "Functions Available When the Printer/Scanner Cannot Be Used Due to an Error," on p.65.

Contacting Your Local Authorized Canon Dealer

If a screen prompting you to contact your local authorized Canon dealer is displayed, follow the procedure described below.

01 Turn the main power OFF and then ON.

IMPORTANT

For precautions to take when restarting the machine, see "Main Power and Energy Saver Key," on p.34.

02 If the operation still cannot be performed correctly, turn the main power switch OFF, remove the power plug from the outlet, and contact your local authorized Canon dealer.

WARNING

Mishandling the power plug is dangerous. For instructions on handling the power plug, see "Important Safety Instructions," on p.81.

NOTE

When you contact your local authorized Canon dealer, have the following information available:

- Product name
- Details of the malfunction
- The error code displayed on the touch panel display

Setting the Limited Functions Mode from the Service Call Message Screen

When [Limited Func. Mode] is displayed, follow the procedures below.

IMPORTANT

If you turn OFF the main power switch when there is a job waiting to print, that job is erased.

NOTE

If you set Limited Functions Mode to 'On' from the Service Call Message screen, [Limited Functions Mode] in [Management Settings] (Settings/Registration) is also set to 'On'. (See e-Manual > Security.)

01 Press [Limited Func. Mode] → [Yes].

A message prompting you to restart the machine (turning the main power switch OFF, and then ON) appears.

02 Turn the main power OFF and then ON.

IMPORTANT

For precautions to take when restarting the machine, see "Main Power and Energy Saver Key," on p.34.

Functions Available When the Printer/ Scanner Cannot Be Used Due to an Error

Even when an error occurs and the Print and Scan functions are restricted, there are functions that can be used. The functions that can be operated are marked with a check mark, and those that cannot be operated are marked with a dash below.

Main Menu Screen

Available Functions	When the Print function is restricted	When the Scan function is restricted
Copy	-	-
Fax	✓*1	-
Scan and Send	✓	-
Scan and Store	✓	-
Access Stored Files	-	✓*2
Fax/I-Fax Inbox	-	✓
Secure Print	-	✓
Scanner	✓	-
Web Access	✓	✓
Shortcut to Settings/ Registration	-	-
Tutorial	✓	✓
Workflow Composer	-	-
Document Scan Code Analyzer*3	✓	✓
Other MEAP Applications*4	✓	✓

*1 Sending a fax from a computer is not available.
*2 [Add Files (Scan and Store)] on the Edit File screen is not available.
*3 Document Scan Code Analyzer is included in the Document Scan Lock Kit. (See e-Manual > Optional Products/Software.)
*4 Available by installing each MEAP application. May not be available depending on the restricted functions.

Touch Panel Display Left Side

Available Functions	When the Print function is restricted	When the Scan function is restricted
Quick Menu*1	✓	✓
The Status Monitor/ Cancel Screen	✓*2	✓

*1 The registered button may not be available depending on the restricted functions.
*2 [Print List] on the Job Log screen and [Register] on the Consumable screen are not available.

Control Panel

Available Functions	When the Print function is restricted	When the Scan function is restricted
Settings/ Registration	-	-

Operation From a Computer

Available Functions	When the Print function is restricted	When the Scan function is restricted
Remote UI*1	✓	✓
MEAP Application*2	✓	✓

*1 Some of the menus may not be available depending on the restricted functions.
*2 Available by installing each MEAP application. May not be available depending on the restricted functions.

IMPORTANT

- A print job is automatically canceled when the Print function is restricted. A scan job is automatically canceled when the Scan function is restricted.
- The machine may not enter the Sleep mode completely when a function is restricted due to an error.

NOTE

If the target function is restricted due to an error, the function is not available when you use the shortcut key on the left side of the touch panel display or when you use the Quick Menu.

Locations of Staple/Paper Jams

Paper and staple jams may occur in the following parts of the machine. By following the instructions in the applicable section, you can clear staple/paper jams. For details on these procedures, see the e-Manual.
Paper Jams: e-Manual > Problem Solving > Locations of Paper Jams
Staple Jams: e-Manual > Problem Solving > Clearing Staple Jams (Staple Finisher-S1)

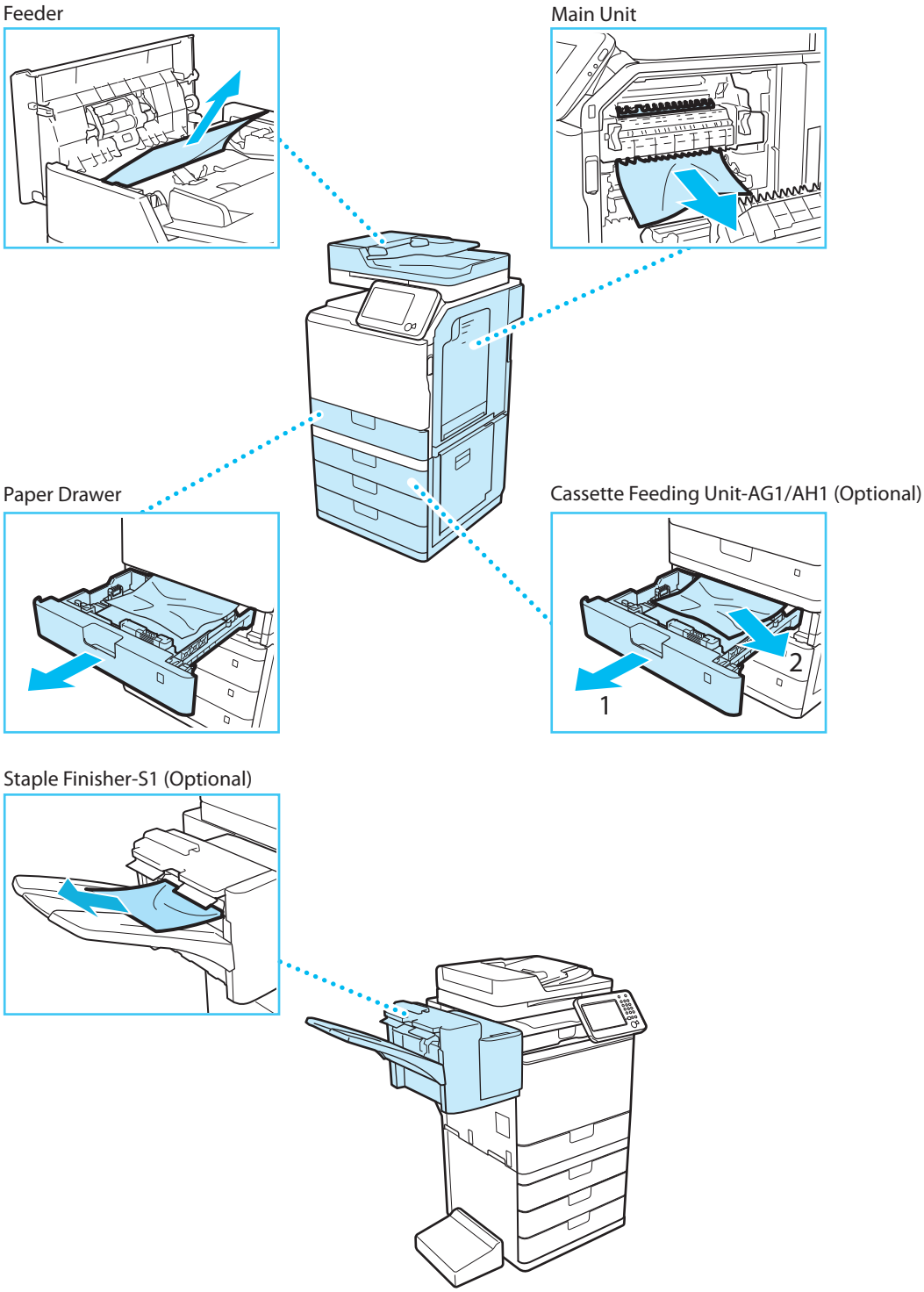

6

Appendix

Specifications **68**
- Main Unit 68
- Feeder 71
- Cassette Feeding Unit-AG1 72
- Cassette Feeding Unit-AH1 72
- Staple Finisher-S1 73
- Copy Card Reader-F1 73
- Super G3 FAX Board-AN1 74
- Send Function (Scan Features) 75
- Send Function (E-Mail and I-Fax Features) 76
- Network Environment (Hardware Specifications) 76
- Network Environment (Software Specifications) 77
- Printer Settings (Software Specifications) 77

Legal Notices **78**
- Product Name 78
- EMC requirements of EC Directive 78
- Laser Safety 78
- Additional Information 78
- IPv6 Ready Logo 79
- WEEE Directive / Rule 79
- Information Security Standard (IEEE 2600) 80
- Copyright 80
- Disclaimers 80
- Legal Limitations on the Usage of Your Product and the Use of Images 80
- Super G3 80

Important Safety Instructions **81**
- Installation 81
- Power Supply 81
- Handling 82
- Maintenance and Inspections 83
- Consumables 84
- Other Warnings 84

Specifications

Specifications are subject to change without notice for product improvement or future release.

Main Unit

Item	Specifications
Name	Canon imageRUNNER ADVANCE C350i/C250i
Type	Reader-printer separated, Desktop
Color Supported	Full Color
Resolution for Reading	600 x 600 dpi
Resolution for Writing	600 x 600 dpi
Number of Tones	256
Available Paper	Paper Drawer: Weight: 60 to 163 g/m^2 Type: Thin (60 to 63 g/m^2), Plain 1 (64 to 75 g/m^2), Plain 2 (76 to 90 g/m^2), Plain 3 (91 to 105 g/m^2), Recycled, Color, Pre-Punched, Bond, Heavy 1 (106 to 128 g/m^2), Heavy 2 (129 to 163 g/m^2), and Envelopes* Multi-Purpose Tray: Weight: 60 to 220 g/m^2 Type: Thin (60 to 63 g/m^2), Plain 1 (64 to 75 g/m^2), Plain 2 (76 to 90 g/m^2), Plain 3 (91 to 105 g/m^2), Recycled, Color, Pre-Punched, Bond, Heavy 1 (106 to 128 g/m^2), Heavy 2 (129 to 163 g/m^2), Heavy 3 (164 to 220 g/m^2), Labels, Transparency, and Envelopes * Envelopes can only be loaded in Paper Drawer 1.
Acceptable Originals	Sheet, book, and three dimensional objects (up to 2 kg)
Paper Sizes	Paper Drawer: A4, B5, A5, and Custom size (98.4 x 190.5 mm to 216 x 355.6 mm) Multi-Purpose Tray: A4, B5, A5, and Custom size (98.4 x 148 mm to 216 x 355.6 mm)

Item	Specifications
Warm-Up Time*	After Powering ON (when [Quick Startup Settings for Main Power] is set to 'Off'): 34 seconds or less After Powering ON (when [Quick Startup Settings for Main Power] is set to 'On'): 10 seconds or less The time until key operations can be performed on the touch panel display is 7 seconds or less. Even if [Quick Startup Settings for Main Power] is set to 'On', the machine does not startup quickly, depending on the situations. Returning from the Sleep mode: 10 seconds or less * Activation time may vary, depending on the environment and conditions under which the machine is being used. (At a room temperature of 20 °C in all above cases.)
First Copy Time	imageRUNNER ADVANCE C350i Full Color: 7.4 seconds Black-and-White: 5.9 seconds imageRUNNER ADVANCE C250i Full Color: 10.5 seconds Black-and-White: 8.4 seconds
Copy Speed*	1:1 imageRUNNER ADVANCE C350i A4 35 sheets/minute B5 26 sheets/minute A5 26 sheets/minute imageRUNNER ADVANCE C250i A4 25 sheets/minute B5 26 sheets/minute A5 26 sheets/minute * Except when paper is fed from the multi-purpose tray. The copy speed may vary, depending on the settings for paper type, paper size, and the sending method. When continuously copying, adjustments for machine temperature or image quality may cause machine operations to pause or become slow.
Margin	Top: 4.0 mm Left and Right: 2.5 mm Bottom: 2.5 mm
Magnification	Regular paper size: Same Ratio 1:1 Reduction 1:0.86 (A4 → B5), 1:0.81 (B5 → A5), 1:0.70 (A4 → A5), 1:0.50, and 1:0.25 Enlargement 1:1.15 (B5 → A4), 1:1.22 (A5 → B5), 1:1.41 (A5 → A4), 1:2.00, and 1:4.00 Copy Ratio: 25 to 400% (in 1% increment)
Paper Feeding System/Capacity	Paper Drawer: 550 sheets (80 g/m^2) or 640 sheets (64 g/m^2) Multi-Purpose Tray: 100 sheets (80 g/m^2)

Item	Specifications
Multiple Copies	999 sheets
Memory Capacity	2 GB
Hard Disk Capacity*	160 GB (Used space: 80 GB) * The hard disk capacity is subject to change in future release.
Power Source	220 - 240 V AC, 50/60 Hz, 4.0 A
Power Consumption	Maximum Power Consumption: 1.5 kW or less When the machine is in the Sleep mode*: 1 W When the main power switch is turned OFF: When [Quick Startup Settings for Main Power] is set to 'On': 0.5 W When [Quick Startup Settings for Main Power] is set to 'Off': 0.1 W * Depending on the system and conditions of use, these values may differ.
Dimensions (H x W x D)	610 mm x 511 mm x 621 mm
Weight	Approximately 45 kg
Installation Space (W x D)	852 mm x 621 mm (when the multi-purpose tray is extended)

Feeder

Item	Specifications
Original Feeding Mechanism	Automatic Document Feeder
Size and Weight of Originals	Size: A4, B5, A5, and B6 Weight: 1-Sided Scanning*: 50 to 105 g/m^2 2-Sided Scanning: 64 to 105 g/m^2 * When scanning only one sheet of paper, originals from 50 to 128 g/m^2 are supported.
Original Tray Capacity	50 sheets (80 g/m^2)
Original Scanning Speed	imageRUNNER ADVANCE C350i: Copying: 1-sided scanning: 35 sheets/minute (A4 in Black-and-White/Full Color at 300 x 600 dpi) Scanning: 1-sided scanning: 35 sheets/minute (A4 in Black-and-White/Full Color at 300 x 300 dpi) imageRUNNER ADVANCE C250i: Copying: 1-sided scanning: 25 sheets/minute (A4 in Black-and-White/Full Color at 300 x 600 dpi) Scanning: 1-sided scanning: 25 sheets/minute (A4 in Black-and-White/Full Color at 300 x 300 dpi)

Cassette Feeding Unit-AG1

Item	Specifications
Paper Sizes	A4, B5, A5, and Custom size (98.4 x 190.5 mm to 216 x 355.6 mm)
Paper Drawers Capacity	550 sheets (80 g/m^2) or 640 sheets (64 g/m^2)
Power Source/Maximum Power Consumption	From the main unit/Approximately 25 W
Dimensions (H x W x D)	425 mm x 511 mm x 508 mm
Weight	Approximately 15 kg

Cassette Feeding Unit-AH1

Item	Specifications
Paper Sizes	A4, B5, A5, and Custom size (98.4 x 190.5 mm to 216 x 355.6 mm)
Paper Drawers Capacity	550 sheets (80 g/m^2) or 640 sheets (64 g/m^2)
Power Source/Maximum Power Consumption	From the main unit/Approximately 35 W
Dimensions (H x W x D)	425 mm x 511 mm x 508 mm
Weight	Approximately 19 kg

Staple Finisher-S1

Item	Specifications
Paper Size/Weight/Type	Size: A4, B5, A5, Custom Size (98.4 x 148 mm to 216 x 355.6 mm), and Envelopes Weight: 60 to 220 g/m^2 Type: Thin (60 to 63 g/m^2), Plain 1 (64 to 75 g/m^2), Plain 2 (76 to 90 g/m^2), Plain 3 (91 to 105 g/m^2), Recycled, Color, Pre-Punched, Bond, Heavy 1 (106 to 128 g/m^2), Heavy 2 (129 to 163 g/m^2), Heavy 3 (164 to 220 g/m^2), Labels, Transparency, and Envelopes
Capacity Per Tray	No finishing set, Collate, and Collate + Offset and Group + Offset mode: 500 sheets (or 73.5 mm in height) Staple mode: 500 sheets/20 sets (or 73.5 mm in height)
Max. Stapling capacity/ Available Staple Size	30 sheets
Power Source/Maximum Power Consumption	From the main unit/Approximately 37 W
Dimensions (H x W x D)	301 mm x 589 mm x 459 mm
Weight	Approximately 14 kg
Installation Space Including the Main Unit (W x D)	1,066 mm x 573 mm (when the multi-purpose tray is extended)

Copy Card Reader-F1

Item	Specifications
Available Cards	Magnetic
Card Readout Method	Magnetic readout
Magnetic Card Reading Direction	Face up
Store/Replay	Replay
Power Source	From the main unit
Dimensions (H x W x D)	40 mm x 88 mm x 96 mm (excluding the attachment kit and cable)
Weight	Approximately 200 g (including the attachment kit and cable)

Super G3 FAX Board-AN1

Item	Specifications
Telephone Line Used*1	Public Switched Telephone Network
Scan Line Density (Scan Transmission)	Normal: 8 pels*2/mm x 3.85 line/mm Fine: 8 pels*2/mm x 7.7 line/mm Super-Fine: 8 pels*2/mm x 15.4 line/mm Ultra-Fine: 16 pels*2/mm x 15.4 line/mm
Transmission Speed	Super G3: 33.6 kbps, G3: 14.4 kbps
Compression Method	MH, MR, MMR, JBIG
Transmission Type	Super G3, G3
Sending Original Sizes	A4, B5*3, A5*3
Receiving Paper Sizes	A3, B4, A4, B5, A5
Transmission Times	JBIG: Approximately 2.6 seconds
Auto Dial Function	Address Book: 1,800 destinations (including destinations stored in one-touch buttons)
Image Memory	Approximately 6,000 pages

*1 When using an IP telephone service, facsimile communication may not be performed normally via an IP telephone line. It is recommended to use facsimile communication via a general telephone (Public Switched Telephone Network) line.
*2 Pels stands for picture elements (pixels).
*3 Sent as A4

Send Function (Scan Features)

Item	Specifications
Communication Protocol	FTP (TCP/IP), SMB (TCP/IP), WebDAV
Data Format	TIFF, JPEG, PDF, XPS, OOXML (PowerPoint)
Resolution	Black-and-White: 100 x 100 dpi, 150 x 150 dpi, 200 x 100 dpi, 200 x 200 dpi, 200 x 400 dpi, 300 x 300 dpi, 400 x 400 dpi, 600 x 600 dpi Color: 100 x 100 dpi, 150 x 150 dpi, 200 x 100 dpi, 200 x 200 dpi, 300 x 300 dpi
System Environment	Windows Server 2003 R2 SP2, Windows Vista SP2, Windows Server 2008 SP2, Windows Server 2008 R2 SP2, Windows 7, Windows 8, Windows 8.1, Windows Server 2012, Windows Server 2012 R2, Solaris 10, Mac OS X 10.6.x/10.7.x/10.8.x/10.9.x, Red Hat Linux 9
Interface	1000BASE-T, 100BASE-TX, 10BASE-T
Color Mode	Automatic-Color Select (Full Color/Grayscale), Automatic-Color Select (Full Color/Black-and-White), Full Color, Grayscale, Black-and-White
Original Type	Text, Text/Photo, Photo
Other	Preview, Browse Windows (SMB) File Server
Optional PDF/XPS/OOXML Functions	PDF: Compact, Trace and Smooth, Encryption, OCR, Device Signature, User Signature, Optimization for Web*1, PDF/A-1b, Reader Extensions XPS: Compact, OCR, Device Signature, User Signature OOXML: PowerPoint, OCR

*1 PDF files optimized for Web viewing.

Send Function (E-Mail and I-Fax Features)

Item	Specifications
Communication Protocol	SMTP, POP3
I-Fax Communication Mode	Simple, Full
Resolution	For Sending E-mail (Black-and-White): 100 x 100 dpi, 150 x 150 dpi, 200 x 100 dpi, 200 x 200 dpi, 200 x 400 dpi, 300 x 300 dpi, 400 x 400 dpi, 600 x 600 dpi For Sending E-mail (Color): 100 x 100 dpi, 150 x 150 dpi, 200 x 100 dpi, 200 x 200 dpi, 300 x 300 dpi For Sending I-Fax: 200 x 100 dpi, 200 x 200 dpi, 200 x 400 dpi*1, 300 x 300 dpi*1, 400 x 400 dpi*1, 600 x 600 dpi*1
Format	E-mail: TIFF, JPEG, PDF, XPS, OOXML(PowerPoint) I-Fax (Black-and-White): TIFF (MH, MR*1, MMR*1)
Original Size	E-mail: A4, B5, A5 I-Fax: A4, B5*2, A5*2
Server Software	Microsoft Exchange 2003 SP2, Microsoft Exchange 2007 SP2, Microsoft Exchange 2010, Microsoft Exchange 2013, Sendmail 8.14.4, Lotus Domino R7.0
Other	Searches a destination via the LDAP Server, Preview
Optional PDF/XPS/OOXML Functions (E-mail only)	PDF: Compact, Trace and Smooth, Encryption, OCR, Device Signature, User Signature, Optimization for Web*3, PDF/A-1b, Reader Extensions XPS: Compact, OCR, Device Signature, User Signature OOXML: PowerPoint, OCR

*1 Available after setting RX conditions of the destination.
*2 Sent as A4.
*3 PDF files optimized for Web viewing.

Network Environment (Hardware Specifications)

Item	Specifications
Network Interface	10Base-T/100Base-TX/1000Base-T (RJ-45)

Network Environment (Software Specifications)

Item	Specifications
Protocol Supported	TCP/IP: Frame type: Ethernet II Print applications: LPD/Raw/IPP/IPPS/FTP/WSD/SMB/NetWare IPX/SPX Frame type: Ethernet II/Ethernet 802.2/Ethernet 802.3/Ethernet SNAP/Auto Detect Print applications: Bindery PServer/NDS PServer/RPrinter/NPrinter

Printer Settings (Software Specifications)

Item	Specifications
Resident Fonts	PCL: 93 Scalable fonts, 2 OCR fonts, 10 Bitmap fonts, and AndaleFont* (Japanese, Korean, Simplified Chinese, Traditional Chinese) PS: 136 Scalable fonts * The optional PCL International Font Set needs to be activated to use Andale® and WorldType® Collection, or Andale Mono WT.
Printable Area	PCL5c, PCL6: Reduced to 4.2 mm from the top, bottom, left, and right edges of the paper. When printing in the Expand Print Region and Print mode, the upper margin becomes 4 mm, the lower margin becomes 2.5 mm, and the side margins both become 4.2 mm. The printable area is enlarged. When an original has data that extends all the way to the edges, even if you select [Expand Print Region and Print], the periphery of the data may be cut off when printing. In this case, specify the reduction ratio in the printer driver so that data is not cut off, and perform printing again.

Legal Notices

Product Name

Safety regulations require the product's name to be registered. In some regions where this product is sold, the following name(s) in parenthesis may be registered instead.

- imageRUNNER ADVANCE C350i/C250i (F162600)

EMC requirements of EC Directive

This equipment conforms with the essential EMC requirements of EC Directive. We declare that this product conforms with the EMC requirements of EC Directive at nominal mains input 230 V, 50 Hz although the rated input of the product is 220 to 240 V, 50/60 Hz. Use of shielded cable is necessary to comply with the technical EMC requirements of EC Directive.

Laser Safety

This Product is certified as a Class 1 laser product under IEC60825-1:2007 and EN60825-1:2007. This means that the product does not produce hazardous laser radiation.

Since radiation emitted inside the product is completely confined within protective housings and external covers, the laser beam cannot escape from the machine during any phase of user operation.

Do not remove protective housings or external covers, except as directed by the equipment's manual.

Additional Information

When servicing or adjusting the optical system of the product, be careful not to place screwdrivers or other shiny objects in the path of the laser beam. Also, accessories such as watches and rings should be removed before working on the product.

The reflected beam, even though visible or invisible, can permanently damage your eyes.

The label shown below is attached to the inside of the front cover.

This Product has been classified under IEC60825-1:2007 and EN60825-1:2007, which conform to the following classes;

CLASS 1 LASER PRODUCT

LASER KLASSE 1

APPAREIL Á LASER DE CLASSE 1

APPARECCHIO LASER DI CLASSE 1

PRODUCTO LÁSER DE CLASE 1

APARELHO A LASER DE CLASSE 1

LUOKAN 1 LASER-TUOTE

LASERPRODUKT KLASS 1

CAUTION

Use of controls, adjustments, or performance of procedures other than those specified in the manuals for this machine may result in hazardous radiation exposure.

IPv6 Ready Logo

The protocol stack included in this machine has obtained the IPv6 Ready Logo Phase-2 established by the IPv6 Forum.

WEEE Directive / Rule

-European Union (and EEA) only-

This symbol attached on the product is according to the WEEE Directive (2002/96/EC).

-India only-

This product is not to be disposed of with your household waste, according to the e-waste (Management and Handling) Rules, 2011. This product should be handed over to a designated collection point, e.g., to an authorized collection site for recycling waste electrical and electronic equipment (EEE). Improper handling of this type of waste could have a possible negative impact on the environment and human health due to potentially hazardous substances that are generally associated with EEE. At the same time, your cooperation in the correct disposal of this product will contribute to the effective usage of natural resources. For more information regarding return and recycling of WEEE products, please visit <http://www.canon.co.in/environment>.

Also, this product complies with the "India E-waste Rule 2011" and prohibits use of lead, mercury, hexavalent chromium, polybrominated biphenyls or polybrominated diphenyl ethers in concentrations exceeding 0.1 % by weight and 0.01 % by weight for Cadmium, except for the exemptions set in Schedule II of the Rule.

Information Security Standard (IEEE 2600)

This machine is compliant with IEEE Std 2600™ - 2008 (hereinafter referred to as IEEE 2600), a global information security standard for multifunction peripherals and printers, and is able to achieve the security requirements defined in IEEE 2600.*

For information on how this machine meets the security requirements defined in IEEE 2600, see e-Manual > Security > IEEE 2600 Security Standard.

* IEEE 2600.1 CC Authentication has not been obtained for this machine by itself.

Copyright

Copyright 2014 by Canon Inc. All rights reserved.

No part of this publication may be reproduced or transmitted in any form or by any means, electronic or mechanical, including photocopying and recording, or by any information storage or retrieval system without the prior written permission of Canon Inc.

This product includes software and/or software modules that are licensed by Canon Inc. or its licensors from third parties. Use and distribution of this software and/or software modules are subject to conditions (a) through (c) below.

(a)
UFST: Copyright © 1989 - 1996, 1997, 2003, 2004, 2008, all rights reserved, by Monotype Imaging Inc.

(b)
Copyright © Unpublished Work of Novell, Inc.
All Rights Reserved.

(c)
Portions of this software are copyright © 2007
The FreeType Project (www.freetype.org).
All rights reserved.

Disclaimers

The information in this document is subject to change without notice.

CANON INC. MAKES NO WARRANTY OF ANY KIND WITH REGARD TO THIS MATERIAL, EITHER EXPRESS OR IMPLIED, EXCEPT AS PROVIDED HEREIN, INCLUDING WITHOUT LIMITATION, THEREOF, WARRANTIES AS TO MARKETABILITY, MERCHANTABILITY, FITNESS FOR A PARTICULAR PURPOSE OR USE, OR NON-INFRINGEMENT. CANON INC. SHALL NOT BE LIABLE FOR ANY DIRECT, INCIDENTAL, OR CONSEQUENTIAL DAMAGES OF ANY NATURE, OR LOSSES OR EXPENSES RESULTING FROM THE USE OF THIS MATERIAL.

Legal Limitations on the Usage of Your Product and the Use of Images

Using your product to scan, print or otherwise reproduce certain documents, and the use of such images as scanned, printed or otherwise reproduced by your product, may be prohibited by law and may result in criminal and/or civil liability. A non-exhaustive list of these documents is set forth below. This list is intended to be a guide only. If you are uncertain about the legality of using your product to scan, print or otherwise reproduce any particular document, and/or of the use of the images scanned, printed or otherwise reproduced, you should consult in advance with your legal advisor for guidance.

- Paper Money
- Travelers Checks
- Money Orders
- Food Stamps
- Certificates of Deposit
- Passports
- Postage Stamps (canceled or uncanceled)
- Immigration Papers
- Identifying Badges or Insignias
- Internal Revenue Stamps (canceled or uncanceled)
- Selective Service or Draft Papers
- Bonds or Other Certificates of Indebtedness
- Checks or Drafts Issued by Governmental Agencies
- Stock Certificates
- Motor Vehicle Licenses and Certificates of Title
- Copyrighted Works/Works of Art without Permission of Copyright Owner

Super G3

Super G3 is a phrase used to describe the new generation of fax machines that use ITU-T V.34 standard 33.6 Kbps* modems. Super G3 High Speed Fax machines allow transmission times of approximately 3 seconds* per page which results in reduced telephone line charges.

* Approximately 3 seconds per page fax transmission time based on CCITT/ITU-T No.1 Chart, (JBIG, Standard Mode) at 33.6 Kbps modem speed. The Public Switched Telephone Network (PSTN) currently supports 28.8 Kbps modem speeds or slower, depending on telephone line conditions.

NOTE

The fax function is available only if the FAX Board is installed.

Important Safety Instructions

Please read these "Important Safety Instructions" thoroughly before operating the machine. As these instructions are intended to prevent injury to the user or other persons or destruction of property, always pay attention to these instructions. Also, since it may result in unexpected accidents or injuries, do not perform any operation unless otherwise specified in the manual. Improper operation or use of this machine could result in personal injury and/or damage requiring extensive repair that may not be covered under your Limited Warranty.

Installation

WARNING

- Never block the ventilation slots and louvers on the machine. These openings are provided for proper ventilation of working parts inside the machine. Blocking these openings can cause the machine to overheat. Never place the machine on a soft surface, such as a sofa or rug.
- Do not install the machine in the following locations:
  - A damp or dusty location
  - A location near water faucets or water
  - A location exposed to direct sunlight
  - A location subject to high temperatures
  - A location near open flames
- Do not install the machine near alcohol, paint thinner, or other flammable substances. If flammable substances come into contact with electrical parts inside the machine, it may result in a fire or electrical shock.
- Do not place the following items on the machine. If these items come into contact with a high-voltage area inside the machine, it may result in a fire or electrical shock.
  If these items are dropped or spilled inside the machine, immediately turn OFF the main power switch, and disconnect the power cord from the power outlet. Then, contact your local authorized Canon dealer.
  - Necklaces and other metal objects
  - Cups, vases, flowerpots, and other containers filled with water or liquids

CAUTION

Do not install the machine in unstable locations, such as unsteady platforms or inclined floors, or in locations subject to excessive vibrations, as this may cause the machine to fall or tip over, resulting in personal injury.

Power Supply

WARNING

- Do not damage or modify the power cord. Also, do not place heavy objects on the power cord, or pull on or excessively bend it, as this could cause electrical damage and result in a fire or electrical shock.
- Keep the power cord away from a heat source; failure to do this may cause the power cord coating to melt, resulting in a fire or electrical shock.
- Do not connect or disconnect the power cord with wet hands, as this may result in electrical shock.
- Do not connect the power cord to a multiplug power strip, as this may cause a fire or electrical shock.
- Do not bundle up or tie the power cord in a knot, as this may result in a fire or electrical shock.
- Insert the power plug completely into the power outlet, as failure to do so may result in a fire or electrical shock.
- Do not use power cords other than the power cord provided, as this may result in a fire or electrical shock.
- As a general rule, do not use extension cords. Using an extension cord may result in a fire or electrical shock.
- Do not use power supplies with voltages other than those specified herein, as this may result in a fire or electrical shock.
- Always grasp the power plug when disconnecting the power cord. Pulling on the power cord may expose or snap the core wire, or otherwise damage the power cord. If the power cord is damaged, this could cause current to leak, resulting in a fire or electrical shock.

IMPORTANT

Leave sufficient space around the power plug so that it can be unplugged easily. If objects are placed around the power plug, you will be unable to unplug it in an emergency.

Handling

WARNING

- Do not attempt to disassemble or modify the machine. There are high-temperature and high-voltage components inside the machine which may result in a fire or electrical shock.
- If the machine makes strange noises, or gives off smoke, heat, or strange smells, immediately turn OFF the main power switch, and disconnect the power cord from the power outlet. Then, contact your local authorized Canon dealer. Continued use of the machine in this condition may result in a fire or electrical shock.
- Do not use highly flammable sprays near the machine. If gas from these sprays comes into contact with the electrical components inside the machine, it may result in a fire or electrical shock.
- To avoid damage to the power cord and creating a fire hazard, always turn OFF the main power switch, and unplug the interface cable when moving the machine. Otherwise, the power cord or interface cable may be damaged, resulting in a fire or electrical shock.
- Make sure that the power plug is firmly inserted into the power outlet if the machine was moved. Do not use the machine while the connection is loose, as doing so may cause a fire.
- Do not drop paper clips, staples, or other metal objects inside the machine. Also, do not spill water, liquids, or flammable substances (alcohol, benzene, paint thinner, etc.) inside the machine. If these items come into contact with a high-voltage area inside the machine, it may result in a fire or electrical shock. If these items are dropped or spilled inside the machine, immediately turn OFF the main power switch, and disconnect the power cord from the power outlet. Then, contact your local authorized Canon dealer.
- Do not use this product for uses other than as a color digital multitasking machine.

CAUTION

- Do not place heavy objects on the machine, as they may tip over or fall resulting in personal injury.
- Close the feeder gently to avoid catching your hands, as this may result in personal injury.

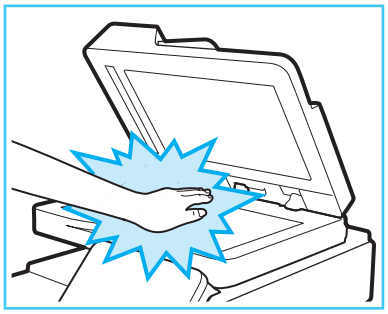

- Do not press down hard on the feeder when using the platen glass to make copies of thick books. Doing so may damage the platen glass and result in personal injury.
- Do not touch the finisher while the machine is printing, as this may result in personal injury.
- Paper that has just been output from the machine may be hot. Be careful when removing or aligning paper from the output tray. Touching paper right after it is output may result in low-temperature burns.
- Do not place your hands, hair, clothing, etc., near the exit and feed rollers. Even if the machine is not in operation, your hands, hair, or clothing may get caught in the rollers, which may result in personal injury or damage if the machine suddenly starts printing.
- Do not place your hands in the part of the tray where stapling is performed (near the rollers) when a finisher is attached, as this may result in personal injury.

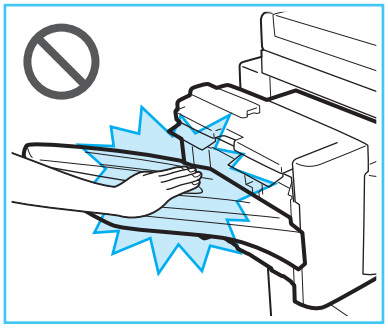

Staple Finisher-S1

- Do not insert your hand into the machine while the paper drawer is removed, as this may result in personal injury.

- The laser beam can be harmful to human bodies. Since radiation emitted inside the product is completely confined within protective housings and external covers, the laser beam cannot escape from the machine during any phase of user operation. Read the following remarks and instructions for safety.
  - Never open covers other than those instructed in the manuals for this machine.
  - Do not remove the following caution label which is attached to the machine. If the label has been removed, contact your local authorized Canon dealer.

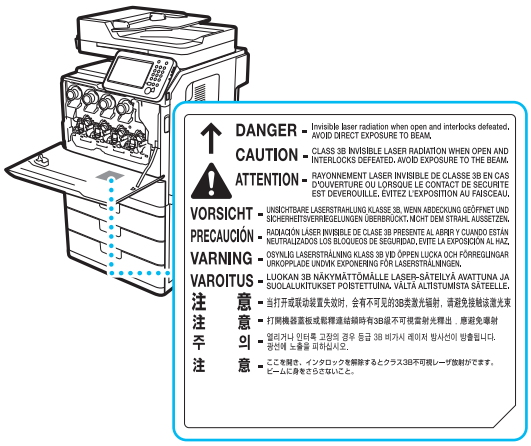

  - If the laser beam escapes from the machine, exposure may cause serious damage to your eyes.
  - Controlling, adjusting, or operating the machine in ways not mentioned in the manuals for this machine may cause dangerous radiation to escape from the machine.

IMPORTANT

Press (Energy Saver) for safety when the machine will not be used for a long period of time, such as overnight. Also, turn OFF the main power switch, and disconnect the power cord for safety when the machine will not be used for an extended period of time, such as during consecutive holidays.

Maintenance and Inspections

WARNING

- When cleaning the machine, first turn OFF the main power switch, then disconnect the power cord. Failure to observe these steps may result in a fire or electrical shock.
- Unplug the power plug periodically and clean with a dry cloth to remove dust and grime. Accumulated dust may absorb humidity in the air and may result in a fire if it comes into contact with electricity.
- Clean the machine using a slightly dampened cloth with a mild detergent mixed with water. Do not use alcohol, benzene, paint thinner, or other flammable substances. Check detergent for flammability prior to use. If flammable substances come into contact with a high-voltage area inside the machine, it may result in a fire or electrical shock.
- There are some areas inside the machine which are subject to high-voltages. When removing jammed paper or when inspecting the inside of the machine, do not allow necklaces, bracelets, or other metal objects to touch the inside of the machine, as this may result in burns or electrical shock.
- Do not burn or throw used toner cartridges into open flames, as this may cause the toner remaining inside the cartridges to ignite, resulting in burns or a fire.
- Make sure that the power plug is firmly inserted into the power outlet after cleaning the machine. Do not use the machine while the connection is loose, as doing so may cause a fire.
- Check the power cord and power plug regularly. If the following conditions occur, contact your local authorized Canon dealer, as the condition may cause a fire:
  - There are burn marks on the power plug.
  - The blade on the power plug is deformed or broken.
  - The power goes OFF and ON when the power cord is bent.
  - There are cuts, cracks, or indentations on the power cord.
  - A part of the power cord becomes hot.
- Check the power cord and power plug regularly to make sure that they are not handled in the following manner, as this may result in a fire or electrical shock:
  - The connection part of the power plug is loose.
  - Stress is being applied to the power cord by a heavy object or by affixing it with staples.
  - The power plug is loose.
  - The power cord is tied in a bundle.
  - The power cord protrudes into a walkway.
  - The power cord is in front of a heater.

CAUTION

- The fixing unit and its surroundings inside the machine may become hot during use. When removing jammed paper or when inspecting the inside of the machine, do not touch the fixing unit and its surroundings, as doing so may result in burns or electrical shock.
- When removing jammed paper or when inspecting the inside of the machine, do not expose yourself to the heat emitted from the fixing unit and its surroundings for a prolonged period of time. Doing so may result in low temperature burns, even though you did not touch the fixing unit and its surroundings directly.
- There are high-temperature and high-voltage components inside the machine. Touching them may result in personal injury or burns. Do not touch the internal parts of the machine which are not instructed to in the manuals for the machine.

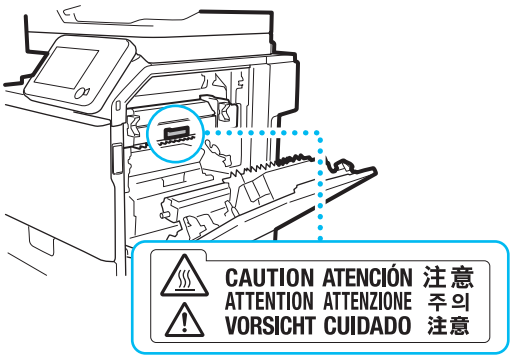

Consumables

WARNING

- Do not burn or throw used toner cartridges into open flames, as this may cause the toner remaining inside the cartridges to ignite, resulting in burns or a fire.
- Do not store toner cartridges or copy paper in places exposed to open flames, as this may cause the toner or paper to ignite, resulting in burns or a fire.
- If you accidentally spill or scatter toner, carefully wipe up the loose toner with a damp, soft cloth and avoid inhaling any toner dust. Do not use a vacuum cleaner that is not equipped with safety measures to prevent dust explosions to clean up loose toner. Doing so may cause damage to the vacuum cleaner or result in a dust explosion due to static discharge.
- For cardiac pacemaker users:
  This drum unit emits low level magnetic flux. If you use a cardiac pacemaker and feel abnormalities, please move away from the drum unit, and consult a physician.

CAUTION

- Keep toner and other consumables out of the reach of small children. If these items are ingested, consult a physician immediately.
- Do not dismantle the toner cartridge, as doing so may cause toner to fly out and enter your eyes or mouth. If toner gets into your eyes or mouth, wash them immediately with cold water and immediately consult a physician.
- If toner escapes from the toner cartridge, make sure not to ingest the toner or allow it to directly touch your skin. If toner touches your skin, wash it away with soap and water. If your skin still feels irritated after washing it, or you ingest toner, consult a doctor immediately.
- Do not touch the electrical contacts.

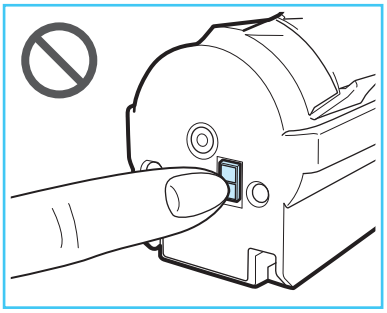

Other Warnings

WARNING

For cardiac pacemaker users:
This product emits low level magnetic flux. If you use a cardiac pacemaker and feel abnormalities, please move away from the product and consult your doctor.

Canon

CANON INC.
30-2, Shimomaruko 3-chome, Ohta-ku, Tokyo 146-8501, Japan

CANON U.S.A., INC.
One Canon Park, Melville, NY 11747, U.S.A.

CANON CANADA INC.
6390 Dixie Road Mississauga, Ontario L5T 1P7, Canada

CANON EUROPA N.V.
Bovenkerkerweg 59, 1185 XB Amstelveen, The Netherlands
(See http://www.canon-europe.com/ for details on your regional dealer)

CANON LATIN AMERICA, INC.
One Canon Park, Melville, NY 11747, U.S.A.

CANON AUSTRALIA PTY. LTD
Building A, The Park Estate, 5 Talavera Road, Macquarie Park, NSW 2113, Australia

CANON CHINA CO., LTD
15F Jinbao Building No.89 Jinbao Street, Dongcheng District, Beijing 100005, China

CANON SINGAPORE PTE. LTD.
1 HarbourFront Avenue #04-01 Keppel Bay Tower, Singapore 098632

CANON HONGKONG CO., LTD
19/F., The Metropolis Tower, 10 Metropolis Drive, Hunghom, Kowloon, Hong Kong

FT6-0499 (010) XXXXXXXXXX Copyright CANON INC. 2014 PRINTED IN CHINA