Canon

Trouble and Maintenance

Support Guide

imageRUNNER
ADVANCE
C3330 / C3325 / C3320

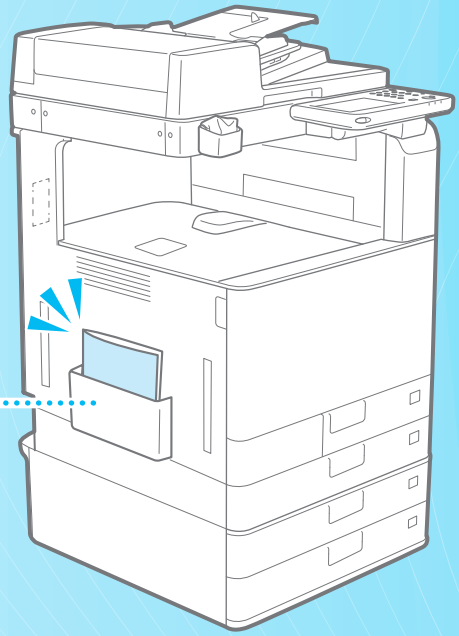

Read this guide first.

Please read this guide before operating this product. After you finish reading the guide, store it in a safe place for future reference.

Do You Have the Following Troubles?

If You Cannot Print

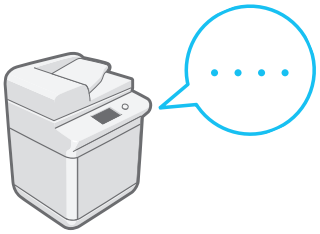

P.12

If Paper Jams Occur

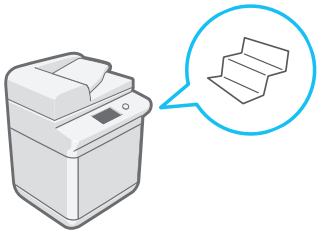

P.14

How to Print on Special Paper

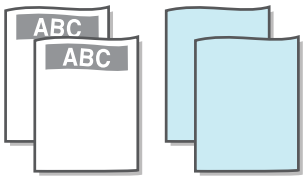

P.19

How to Print on Envelopes

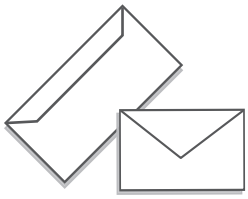

P.18

How to Print on the Reverse Side of Paper

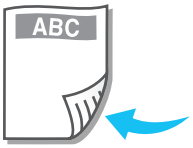

P.20

If Originals Loaded in the Feeder and Prints Become Dirty

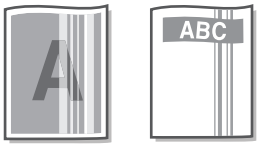

P.16

If Two-Sided Printing Settings Do Not Work Correctly P.17

If You Cannot Send/Forward P.22

If the "Call service representative." Message Is Displayed P.24

If the "Load paper." Message Is Displayed P.21

If an Error Message Is Displayed P.20

Trouble with Print Results

Paper Curls P.26

Irregularities Appear in Images/Images Are Faint P.27

Streaks Appear in Images P.28

Images Are Shifted/ Slanted/Skewed P.29

Colors Are Shifted P.30

Colors Are Too Light/ Color Quality Is Poor P.30

Bleed-through Occurs P.30

Documents Are Not Printed with the Specified Size P.31

The Front and Back Sides of a Document Are Reversed P.31

Contents

Preface 06

How To Use This Manual 06
- Symbols 06
- Keys and Buttons 06
- Screens 07
- Illustrations 07
- Trademarks 07

Manuals for the Machine 09

How to Use the e-Manual 10
- How to Install the e-Manual 10
- If the e-Manual (CD-ROM) Does Not Start 10
- Top Page of the e-Manual 10

Chapter 1 Troubleshooting

If You Cannot Print 12
- Check the following first. 12
- If You Cannot Print from a Computer 13

If Paper Jams Occur 14
- Paper Jams Occur Frequently 14

If Originals Loaded in the Feeder and Prints Become Dirty 16
- Cleaning the Feeder Rollers 16
- Cleaning the Document Feed Scanning Area 16

If Two-Sided Printing Settings Do Not Work Correctly 17

How to Print on Envelopes 18

How to Print on Special Paper 19

How to Print on the Reverse Side of Paper 20

If an Error Message Is Displayed 20

If the "Load paper." Message Is Displayed 21

If You Cannot Send/Forward 22
- If You Cannot Save Documents to a Server Using [Scan and Send] 22
- If You Cannot Send/Forward Faxes 22
- If the Problem Cannot Be Solved 23

If the "Call service representative." Message Is Displayed 24
- When You Need to Contact Your Local Authorized Canon Dealer 24
- When the Print or Scan Function Does Not Operate Normally 24
- When a Message Is Displayed on the Touch Panel Display 24
- Before Contacting Your Local Authorized Canon Dealer 25

Trouble with Print Results 26
- Paper Curls 26
- Irregularities Appear in Images/Images Are Faint 27
- Streaks Appear in Images 28
- Images Are Shifted/Slanted/Skewed 29
- Colors Are Shifted 30
- Colors Are Too Light/Color Quality Is Poor 30
- Bleed-through Occurs 30
- Documents Are Not Printed with the Specified Size 31
- The Front and Back Sides of a Document Are Reversed 31

Chapter 2 Routine Maintenance

Loading Paper 34
- Loading Paper into a Paper Drawer 34
- Checking the Types of Paper That Can Be Used 36

Replacement Parts 37

Replacing the Stamp Cartridge (For the DADF-AQ1) 38

Replacing the Staple Case in the Staple Unit (Staple Finisher-U1/Booklet Finisher-U1) 39

Replacing the Staple Cartridge in the Saddle Stitcher Unit (Booklet Finisher-U1) 41

Replacing the Staple Case (Inner Finisher-G1) 43

Replacing the Toner Cartridge 45

Replacing the Waste Toner Container 48

Consumables 50
- Recommended Paper 50
- Toner 50
- Stamp Ink Cartridge 51
- Staple Cartridge 51

Chapter 3
Before Using This Machine

Parts and Their Functions 54
External View 54
Internal View 55
Control Panel Parts and Functions 56
Adjusting the Angle of the Control Panel 57

Main Power and Energy Saver Key 58
How to Turn ON the Main Power 58
Energy Saver Key 59
Shutting Down the Machine 59

Backing Up/Exporting Data 60
Data You Can Back Up 60
Data You Can Export 60
Batch Exporting 60
Individual Exporting 60

Specifications 61
Main Unit 61
DADF-AQ1 64
Cassette Feeding Unit-AL1 64
Inner Finisher-G1 65
Staple Finisher-U1 67
Booklet Finisher-U1 68
Inner 2way Tray-J1 69
Copy Tray-J2 70
Copy Card Reader-F1 70
Super G3 FAX Board-AR1 71
Send Function (Scan Features) 72
Send Function (E-Mail and I-Fax Features) 73
Network Environment (Hardware Specifications) 73
Network Environment (Software Specifications) 74
Printer Settings (Software Specifications) 74

Chapter 4
Appendix

Installation Location and Handling 76
Installation Precautions 76
Avoid Installing the Machine in the Following Locations 76
Select a Safe Power Supply 77
Moving the Machine 77
Provide Adequate Installation Space 77
Handling Precautions 78

Important Safety Instructions 79
Installation 79
Power Supply 79
Handling 80
Maintenance and Inspections 81
Consumables 82
Other Warnings 82

Legal Notices 83
Product Name 83
EMC requirements of EC Directive 83
Laser Safety 83
Additional Information 83
IPv6 Ready Logo 84
WEEE Directive / Rule 84
Information Security Standard (IEEE 2600) 85
Copyright 85
Disclaimers 85
Legal Limitations on the Usage of Your Product and the Use of Images 85
Super G3 85

Preface

Thank you for purchasing the Canon imageRUNNER ADVANCE C3330/C3325/C3320. Please read this manual thoroughly before operating the machine to familiarize yourself with its capabilities, and to make the most of its many functions. For information on the detailed settings for the functions described in this manual, see the e-Manual. After reading this manual, store it in a safe place for future reference.

How To Use This Manual

Symbols

The following symbols are used in this manual to explain procedures, restrictions, handling precautions, and instructions that should be observed for safety.

WARNING

Indicates a warning concerning operations that may lead to death or injury to persons if not performed correctly. To use the machine safely, always pay attention to these warnings.

CAUTION

Indicates a caution concerning operations that may lead to injury to persons if not performed correctly. To use the machine safely, always pay attention to these cautions.

IMPORTANT

Indicates operational requirements and restrictions. Be sure to read these items carefully to operate the machine correctly, and avoid damage to the machine or property.

NOTE

Indicates a clarification of an operation, or contains additional explanations for a procedure. Reading these notes is highly recommended.

Indicates an operation that must not be performed. Read these items carefully, and make sure not to perform the described operations.

Keys and Buttons

The following symbols and key/button names are a few examples of how keys and buttons to be clicked or pressed are expressed in this manual:

- Touch Panel Display Keys: [Key Name]
  Example: [Cancel]
- Control Panel Keys: Key Icon (Key Name)
  Example: (Start)
- Buttons on Computer Operation Screens: [Button Name]
  Example: [OK]

Screens

Screens of the touch panel display used in this manual are those taken when the imageRUNNER ADVANCE C3330 has the following optional equipment attached to it:

- DADF-AQ1
- Cassette Feeding Unit-AL1
- Booklet Finisher-U1
- 3 Way Unit-D1
- Super G3 FAX Board
- Web Access Software

Note that functions that cannot be used depending on the model or options do not appear on the touch panel display.

Keys to Press for Operation

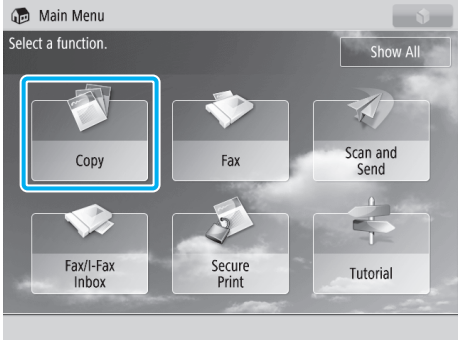

The keys which you should press are marked with a ( ), as shown above. When multiple keys can be pressed on the touch panel display, all keys are marked. Select the keys, which suit your needs.

Screens used in this manual may differ from the ones you actually see.

Illustrations

Illustrations used in this manual are those displayed when the imageRUNNER ADVANCE C3330 has the following optional equipment attached to it:

- DADF-AQ1
- Cassette Feeding Unit-AL1
- Booklet Finisher-U1
- 3 Way Unit-D1

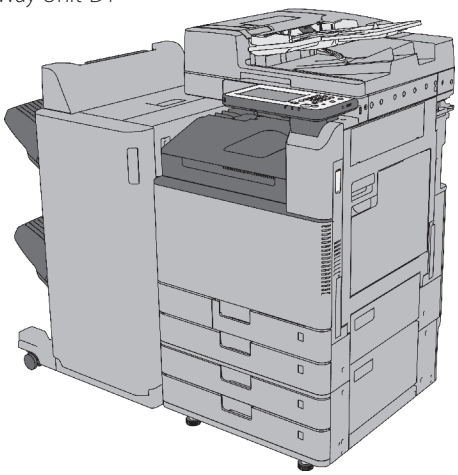

Trademarks

"MEAP" is a trademark of CANON Inc., referring to an "application platform" for Canon multifunction and single function printers.

This product contains the Universal Font Scaling Technology or UFST® under license from Monotype Imaging, Inc. UFST® is a trademark of Monotype Imaging, Inc. registered in the United States Patent and Trademark Office and may be registered in certain jurisdictions.

Apple, AppleTalk, EtherTalk, LocalTalk, Mac, Macintosh, Mac OS, and Safari are trademarks of Apple Inc., registered in the U.S. and other countries.

Microsoft, Windows, Windows Vista, Windows Server, Internet Explorer, Excel, and PowerPoint are either registered trademarks or trademarks of Microsoft Corporation in the United States and/or other countries.

Adobe, PostScript, and the PostScript logo are either registered trademarks or trademarks of Adobe Systems Incorporated in the United States and/or other countries.

Copyright © 2007 -08 Adobe Systems Incorporated. All rights reserved.

Protected by U.S. Patents 5,737,599; 5,781,785; 5,819,301; 5,929,866; 5,943,063; 6,073,148; 6,515,763; 6,639,593; 6,754,382; 7,046,403; 7,213,269; 7,242,415; Patents pending in the U.S. and other countries.

All instances of the name PostScript in the text are references to the PostScript language as defined by Adobe Systems Incorporated unless otherwise stated. The name PostScript also is used as a product trademark for Adobe Systems' implementation of the PostScript language interpreter.

Except as otherwise stated, any reference to a "PostScript printing device," "PostScript display device," or similar item refers to a printing device, display device or item (respectively) that contains PostScript technology created or licensed by Adobe Systems Incorporated and not to devices or items that purport to be merely compatible with the PostScript language.

Adobe, the Adobe logo, PostScript, the PostScript logo, and PostScript 3 are either registered trademarks or trademarks of Adobe Systems Incorporated in the United States and/or other countries.

Linux is a registered trademark of Linus Torvalds. Microsoft and Windows are either registered trademarks or trademarks of Microsoft Corporation in the United States and/or other countries.

All other trademarks are the property of their respective owners.

The PDF logo is a trademark or registered trademark of Adobe Systems Incorporated in the United States and other countries.

Copyright © 2008 Adobe Systems Incorporated. All rights reserved.

Protected by U.S. Patents 6,185,684; 6,205,549; 7,213,269; 7,272,628; 7,278,168; Patents pending in the U.S. and other countries.

All instances of the name PostScript in the text are references to the PostScript language as defined by Adobe Systems Incorporated unless otherwise stated. The name PostScript also is used as a product trademark for Adobe Systems' implementation of the PostScript language interpreter.

Except as otherwise stated, any reference to a "PostScript printing device," "PostScript display device," or similar item refers to a printing device, display device or item (respectively) that contains PostScript technology created or licensed by Adobe Systems Incorporated and not to devices or items that purport to be merely compatible with the PostScript language.

Adobe, the Adobe logo, PostScript, the PostScript Logo, and PostScript 3 are either registered trademarks or trademarks of Adobe Systems Incorporated in the United States and/or other countries.

All other trademarks are the property of their respective owners.

Other product and company names herein may be the trademarks of their respective owners.

Manuals for the Machine

The manuals for this machine are divided as follows. Please refer to them for detailed information.

Guides with this symbol are printed manuals.

Guides with this symbol are included on the accompanying CD-ROM.

Support Guide (This Manual)

- Describes the troubleshooting procedures and maintenance procedures for the machine.
- Includes the specifications of the machine.
- Describes the precautions for using the machine.

Quick Operation Guide

- Describes the operations of the basic functions using simple steps.
- Describes the functions in an easy to understand manner using illustrations.

e-Manual (HTML Manual)

- Describes all the functions of the machine. Also provided with a search function that is useful for finding and checking information.
- Includes "Practical Workflows," which introduces flows of practical operations using functions of the machine.

Driver Installation Guide

- Provides instructions on installing the printer, fax, and other drivers. Included on the same CD-ROM as each driver.
  Windows:
  - Printer Driver Installation Guide
  - Fax Driver Installation Guide
  - Color Network ScanGear 2 Installation Guide
  Mac OS:
  - Canon Printer Driver Guide
  - Canon Fax Driver Guide

The CD-ROM/DVD-ROM provided for this product may include manuals in PDF format. If you do not have access to Adobe Reader to view the manuals in PDF format, try other programs such as PDF Preview developed by Vivid Document Imaging Technologies.

How to Use the e-Manual

How to Install the e-Manual

Windows

1. Insert the e-Manual CD-ROM in your computer.
2. Select the language for the e-Manual → click [Next].
   If you select [Display], the e-Manual is displayed without installation.
3. Read the License Agreement, and then click [Yes].
4. Click [Install].

NOTE

If the shortcut icon created on the Desktop or the [index.html] file is double-clicked, the e-Manual is displayed.

Macintosh

1. Insert the e-Manual CD-ROM into your computer.
2. Drag-and-drop the [iRADV_C3330 Manual_ene] folder to the location you want to save it.
3. Double-click [index.html] in the [iRADV_C3330 Manual_ene] folder, and the e-Manual is displayed.

NOTE

Depending on the operating system you are using, a security protection message may appear. In this case, allow the content to be displayed.

If the e-Manual (CD-ROM) Does Not Start

The CD-ROM auto run function may be disabled. In this case, you must perform the following procedure.

Windows 8/Server 2012

1. Display the desktop → click the explorer icon on the taskbar.
2. Click [Computer].
3. Double-click the e-Manual icon.
4. Double-click [Maninst.exe].

Windows Vista/7/Server 2008

1. Click [Start] on the taskbar → click [Computer].
2. Double-click the e-Manual icon.
3. Double-click [Maninst.exe].

Windows XP/Server 2003

1. Click [Start] on the taskbar → click [My Computer].
2. Double-click the e-Manual icon.
3. Double-click [Maninst.exe].

Top Page of the e-Manual

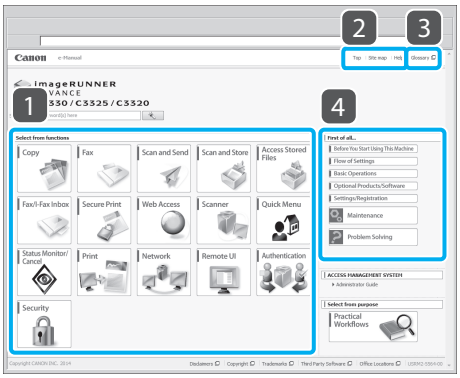

1 Select from functions

The instructions for each function and operation method are described.

2 Top, Site map, Help

Links to the e-Manual's top page, site map, and help are displayed.

3 Glossary

A link to the glossary is displayed.

4 First of all...

This section contains information needed to use the machine, and information on optional products and software.

1

Troubleshooting

If You Cannot Print 12
Check the following first. 12
If You Cannot Print from a Computer 13
If Paper Jams Occur 14
Paper Jams Occur Frequently 14
If Originals Loaded in the Feeder and Prints Become Dirty 16
Cleaning the Feeder Rollers 16
Cleaning the Document Feed Scanning Area 16
If Two-Sided Printing Settings Do Not Work Correctly 17
How to Print on Envelopes 18
How to Print on Special Paper 19
How to Print on the Reverse Side of Paper 20
If an Error Message Is Displayed 20
If the "Load paper." Message Is Displayed 21
If You Cannot Send/Forward 22
If You Cannot Save Documents to a Server Using [Scan and Send] 22
If You Cannot Send/Forward Faxes 22
If the Problem Cannot Be Solved 23
If the "Call service representative." Message Is Displayed 24
When You Need to Contact Your Local Authorized Canon Dealer 24
When the Print or Scan Function Does Not Operate Normally 24
When a Message Is Displayed on the Touch Panel Display 24
Before Contacting Your Local Authorized Canon Dealer 25
Trouble with Print Results 26
Paper Curls 26
Irregularities Appear in Images/Images Are Faint 27
Streaks Appear in Images 28
Images Are Shifted/Slanted/Skewed 29
Colors Are Shifted 30
Colors Are Too Light/Color Quality Is Poor 30
Bleed-through Occurs 30
Documents Are Not Printed with the Specified Size 31
The Front and Back Sides of a Document Are Reversed 31

If You Cannot Print

Check the following first.

Check 1

Is a message displayed on the touch panel display?

For information on the meaning of messages and their remedies, see the e-Manual.

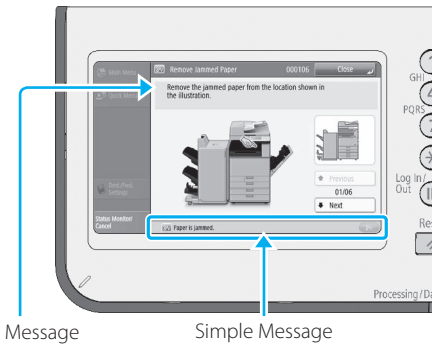

Check 2

Is (Energy Saver) lit?

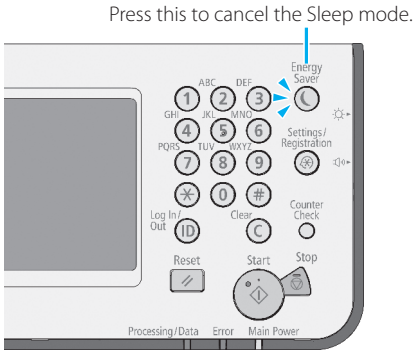

Check 3

Is the main power indicator Off?

If the main power indicator does not light when you turn the main power ON, check the power plug.

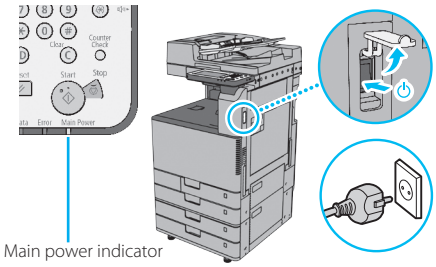

Check 4

Is the machine correctly connected to the computer?

Check the network connection. For more information, see the e-Manual.

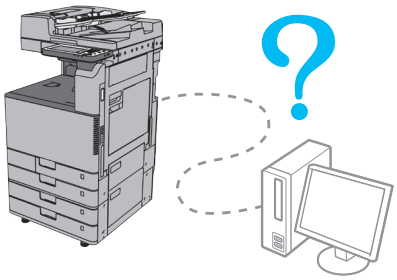

If You Cannot Print from a Computer

Cause Internal processes have stopped for some reason.

Remedy Restart the machine. Turn OFF the machine, wait at least 10 seconds, and then turn it ON.

▼

Cause The printer driver is not installed correctly.

Remedy Install the printer driver again. For more information, see the driver installation guide.

▼

Cause The IP address is not set correctly.

Remedy Set the IP address again. For more information, see the e-Manual.

If Paper Jams Occur

If a paper jam occurs, the procedure for removing the jammed paper is displayed on the touch panel display. Refer to the screen to remove the jammed paper. For more information, see the e-Manual.

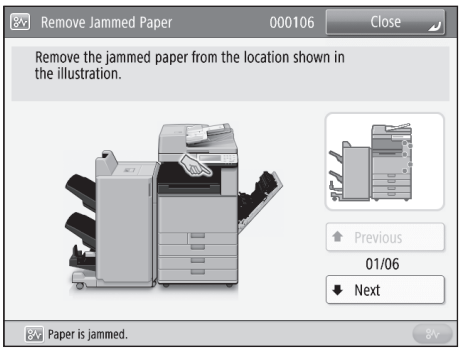

Paper Jams Occur Frequently

Cause The position of the slide guides is not correct.

Remedy Adjust the slide guides to match the size of the paper. If multiple sheets of paper are fed together or paper jams occur, change the orientation of the paper and load it again.

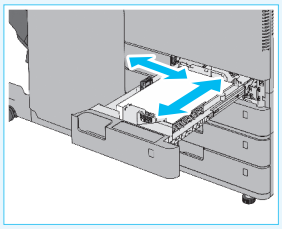

Paper Drawer 1

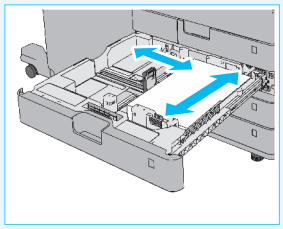

Paper Drawer 2, 3, and 4

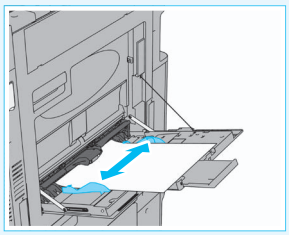

Multi-Purpose Tray

Cause The paper settings do not match the paper that is loaded.

Remedy Check the paper settings in [Consmbls./Others] in [Status Monitor/Cancel]. If the paper settings do not match the paper that is loaded, change the settings so that they match.

NOTE

The paper loaded in the paper drawers and multi-purpose tray can be set in (Settings/Registration) → [Preferences] → [Paper Settings]. For more information, see the e-Manual.

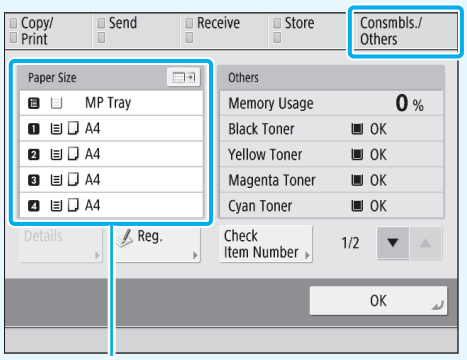

Paper settings

Cause There are torn pieces of paper left inside the machine.

Remedy When you pull out jammed paper, the paper may tear, causing pieces of paper to remain in the machine. Check the location where the paper jam is, and remove any torn pieces of paper.

Cause The paper is damp.

Remedy Turn the Dehumidification switch on. If the problem is still not resolved, load paper that is not damp. For information on loading paper, see "Loading Paper," on p.34.

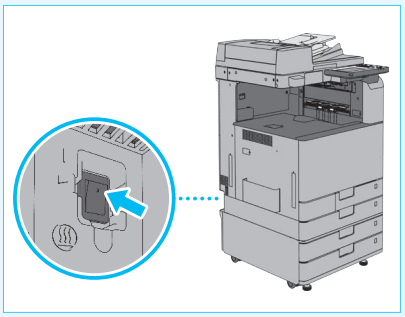

If Originals Loaded in the Feeder and Prints Become Dirty

If originals loaded in the feeder and paper that is output get dirty, clean the area that is illustrated below.

Clean the machine with a cloth which is wrung after being dampened in water, and then wipe it clean with a soft, dry cloth.

IMPORTANT

Never use alcohol, benzene, paint thinner, or other solvents for cleaning.

Clean the machine with the glass cleaning sheet included with the machine.

NOTE

When the glass cleaning sheet is dirty, rinse it with water and spread it out to let it dry.

Cleaning the Feeder Rollers

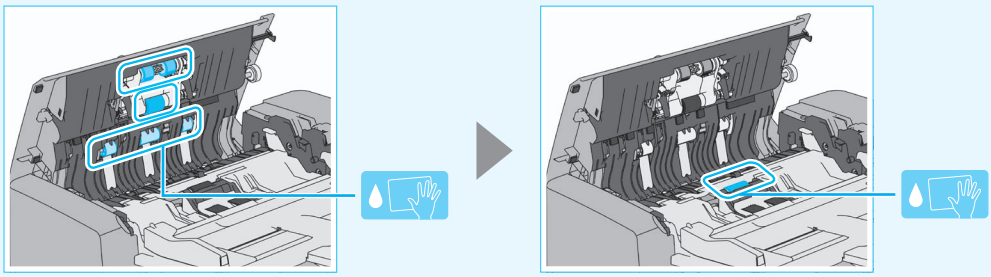

IMPORTANT

Spin the rollers while cleaning them.

Cleaning the Document Feed Scanning Area

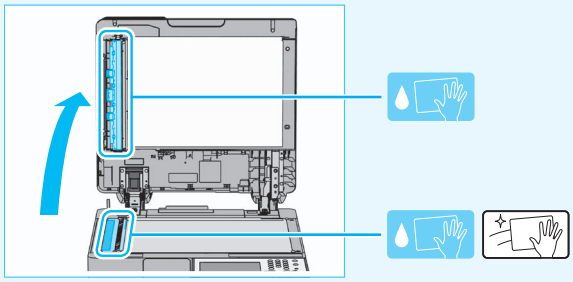

If Two-Sided Printing Settings Do Not Work Correctly

Two-sided printing settings are specified with a combination of [Orientation] and [Binding Location] on the [Properties] screen of the printer driver. Follow the procedure below to specify the settings again.

1 Select [2-sided Printing].

2 Specify a combination of [Orientation] and [Binding Location] by referring to the following table.

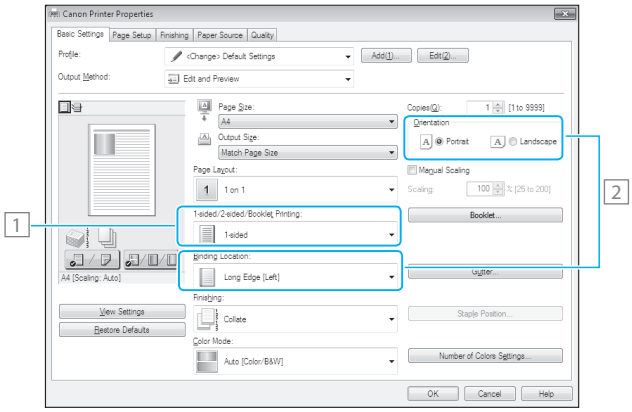

		Orientation	
		Portrait	Landscape
Binding Location	Short Edge		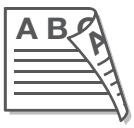
	Long Edge		

How to Print on Envelopes

Envelopes can be loaded into Paper Drawer 1, Paper Drawer 2, and the multi-purpose tray. Load the paper correctly by referring to the illustrations. For more information, see the e-Manual.

NOTE

- After loading the paper, specify the loaded paper in (Settings/Registration) → [Preferences] → [Paper Settings].
- When loading envelopes other than ISO-C5 and Kakugata 2 envelopes in a paper drawer, the Envelope Feeder Attachment must be attached.

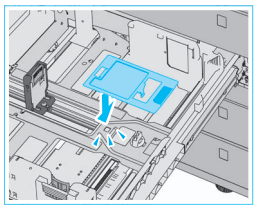

Paper Drawer 2

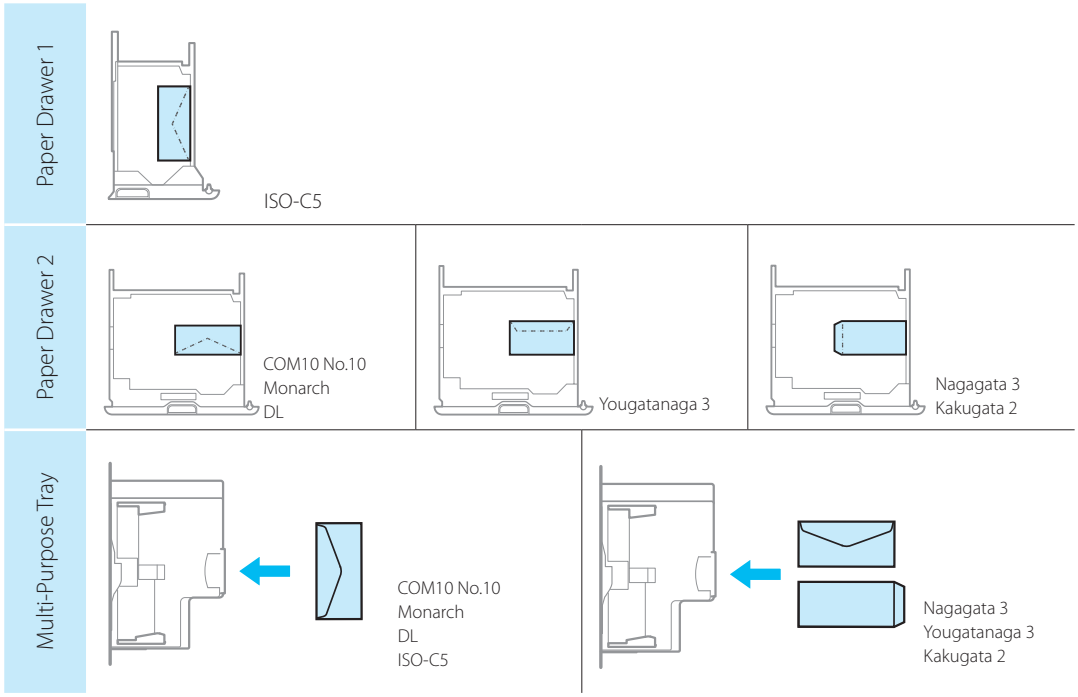

How to Print on Special Paper

Load paper such as labels or paper with printed logos in the multi-purpose tray. The printing result differs according to the direction that the paper is loaded. Refer to the illustration below to load the paper correctly.

NOTE

- After loading the paper, specify the loaded paper in (Settings/Registration) → [Preferences] → [Paper Settings].
- Load the side to print on face down when using the multi-purpose tray.

Example: A4 size paper with printed logos

Orientation	How to load a paper	Printing result
A4	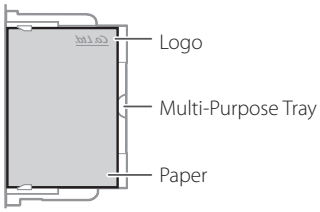	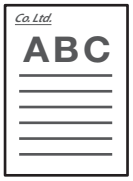
	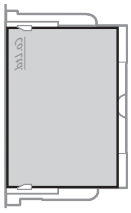	
A4R	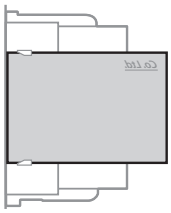	
	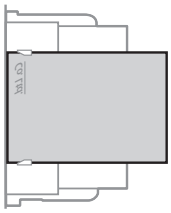	

How to Print on the Reverse Side of Paper

If you want to print on the reverse side of the paper, load the paper face down in the multi-purpose tray. After loading the paper, select [2nd Side of 2-Sided Page] on the paper type selection screen.

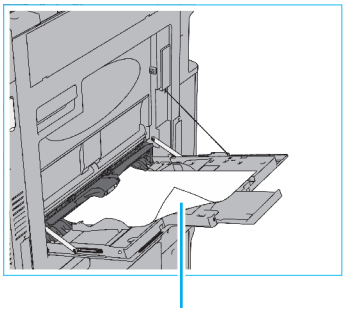

Side to Print on

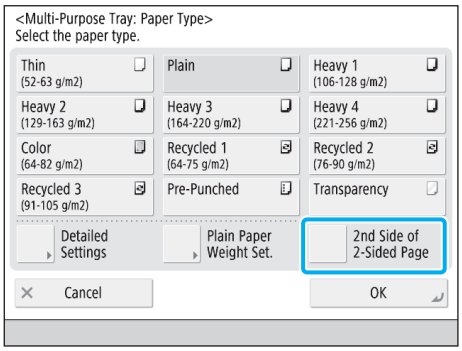

If an Error Message Is Displayed

In the following cases, an error message may be displayed on the touch panel display or in the Web browser. For information on resolving errors, etc., see the e-Manual.

- When scanning or printing cannot be performed because of an operational error
- When you need to perform an operation while scanning or printing

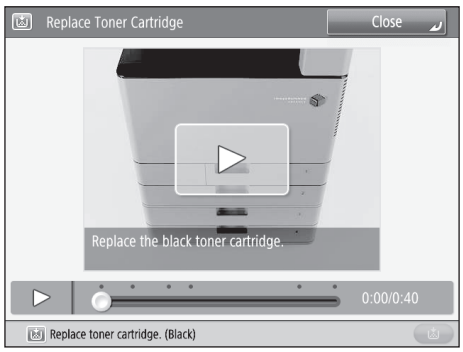

Touch Panel Display

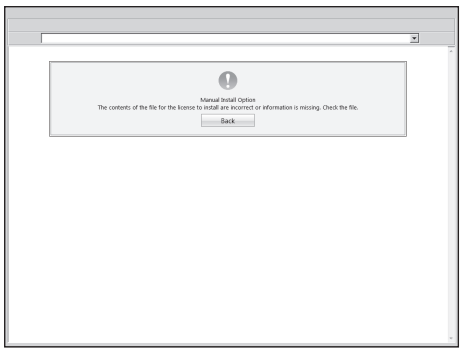

Web Browser

If the "Load paper." Message Is Displayed

Cause The paper source is out of paper.

Remedy Load paper in the paper source indicated on the touch panel display. For information on loading paper, see "Loading Paper," on p.34.

Cause The position of the slide guides is not correct.

Remedy Adjust the slide guides to match the size of the paper. Paper may overlap when it is fed or a paper jam may occur, depending on the cut surface of the paper. Changing the paper orientation and loading it again may reduce the effect of the cut surface.

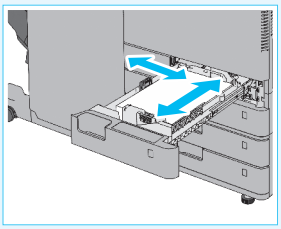

Paper Drawer 1

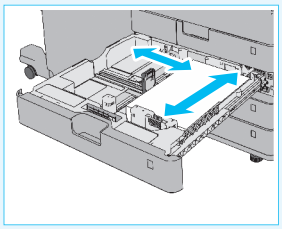

Paper Drawer 2, 3, and 4

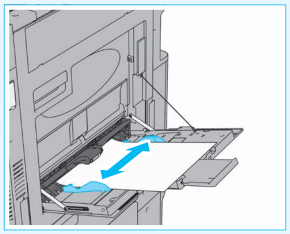

Multi-Purpose Tray

Cause The paper settings do not match the paper that is loaded.

Remedy Check the paper settings in [Consmbls./Others] in [Status Monitor/Cancel]. If the paper settings do not match the paper that is loaded, change the settings so that they match.

NOTE

The paper loaded in the paper drawers and multi-purpose tray can be set in (Settings/Registration) → [Preferences] → [Paper Settings]. For more information, see the e-Manual.

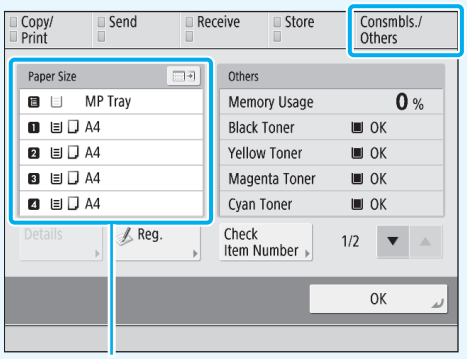

Paper settings

Cause The paper settings in the printer driver or application differ from the paper that is loaded.

Remedy Check the paper settings on the [Printing Preference] sheet of the printer driver, and match them with the paper that is loaded.

If You Cannot Send/Forward

If You Cannot Save Documents to a Server Using [Scan and Send]

Cause The password of the file server has been updated.

Remedy For information on the updated password, contact your server administrator.

▼

Cause The directory and name of folder to save to has been changed on the server.

Remedy Change the address of the file server that is registered in the machine. You can check whether the machine can connect to the file server correctly by pressing [Check Connection] on the screen for registering destinations. For more information, see the e-Manual.

If You Cannot Send/Forward Faxes

Cause The destination is not set correctly.

Remedy If you cannot send faxes, register the destination again in [Dest./Fwd. Settings] → [Register Destinations] → [Register New Dest.]. If you cannot forward, register the destination again in (Settings/Registration) → [Function Settings] → [Forwarding Settings]. For more information, see the e-Manual.

NOTE

When setting destinations, it is convenient to use the Remote UI. For more information, see the e-Manual.

▼

Cause The fax transmission speed is too fast, which causes a communication error.

Remedy Set the speed again in (Settings/Registration) → [Function Settings] → [TX Start Speed].

If the Problem Cannot Be Solved

A three digit number (error code) is displayed on the detailed information screen of [Status Monitor/ Cancel]. For information on each error code and its remedy, see the e-Manual.

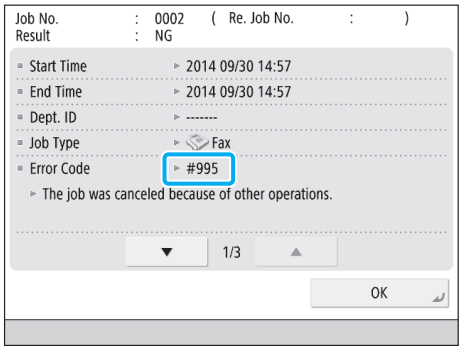

NOTE

Error codes are also printed in the Results column of various reports such as the Communication Management Report.

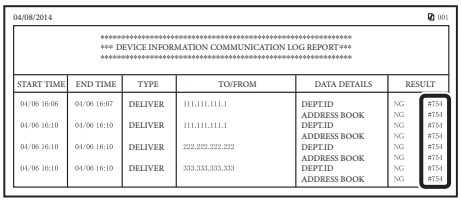

04/08/2014 001

*** DEVICE INFORMATION COMMUNICATION LOG REPORT***

START TIME	END TIME	TYPE	TO/FROM	DATA DETAILS	RESULT	
04/06 16:06	04/06 16:07	DELIVER	111.111.111.1	DEPT.ID	NG	#754
				ADDRESS BOOK	NG	#754
04/06 16:10	04/06 16:10	DELIVER	111.111.111.1	DEPT.ID	NG	#754
				ADDRESS BOOK	NG	#754
04/06 16:10	04/06 16:10	DELIVER	222.222.222.222	DEPT.ID	NG	#754
				ADDRESS BOOK	NG	#754
04/06 16:10	04/06 16:10	DELIVER	333.333.333.333	DEPT.ID	NG	#754
				ADDRESS BOOK	NG	#754

If the "Call service representative." Message Is Displayed

When You Need to Contact Your Local Authorized Canon Dealer

If a malfunction occurs and the machine cannot operate normally, a screen prompting you to contact your local authorized Canon dealer is displayed. If a screen is displayed, contact the dealer. For more information, see "Before Contacting Your Local Authorized Canon Dealer," on p.25.

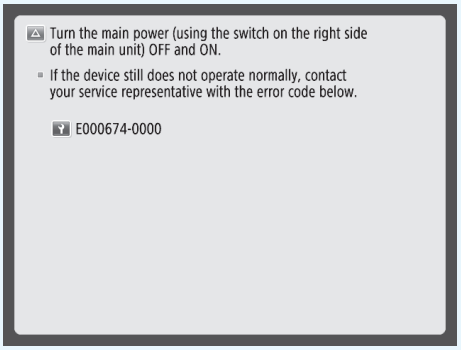

When the Print or Scan Function Does Not Operate Normally

The selected function cannot be used. Press [Main Menu] to return to the Main Menu.

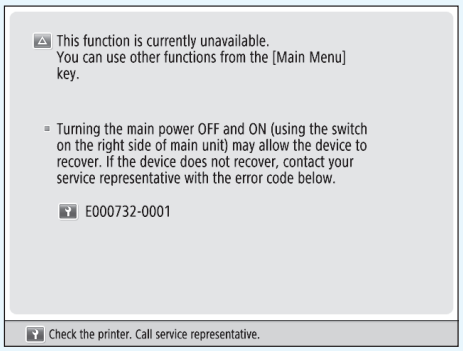

When a Message Is Displayed on the Touch Panel Display

If the message "Call service representative." is displayed on the bottom of the touch panel display, you may be able to continue using the machine, depending on the function. For more information, see the table on the next page.

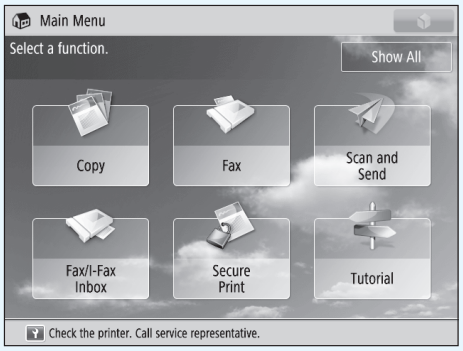

Available Functions	When the Print function is restricted	When the Scan function is restricted
Copy	-	-
Fax	✓*1	-
Scan and Send	✓	-
Scan and Store	✓	-
Access Stored Files	-	✓*2
Fax/I-Fax Inbox	-	✓
Secure Print	-	✓
Scanner	✓	-
Web Access	✓	✓
Shortcut to Settings/Registration	-	-
Tutorial	✓	✓
iW Function Flow	-	-
Document Scan Code Analyzer*3	✓	✓
MEAP Applications*4	✓	✓
Quick Menu*5	✓	✓
The Status Monitor/Cancel Screen	✓*6	✓
Settings/Registration	-	-
Remote UI*7	✓	✓

*1 Sending a fax from a computer is not available.
*2 [Add Files (Scan and Store)] on the Edit File screen is not available.
*3 Document Scan Code Analyzer is included in the Document Scan Lock Kit.
*4 Available by installing each MEAP application. May not be available depending on the restricted functions.
*5 The registered button may not be available depending on the restricted functions.
*6 [Print List] on the Job Log screen and [Register] on the Consumable screen are not available.
*7 Some of the menus may not be available depending on the restricted functions.

Before Contacting Your Local Authorized Canon Dealer

Turn the main power OFF and then ON. If the operation still cannot be performed correctly, follow the procedure described below to contact your local authorized Canon dealer.

IMPORTANT

If you turn OFF the main power switch when there is a job waiting to print, that job is erased.

01 Make a note of the code displayed on the screen.

02 Turn the machine OFF, and disconnect the power plug from the power outlet.

03 Check the product name and contact your local authorized Canon dealer.

Trouble with Print Results

Paper Curls

Cause The paper settings do not match the paper that is loaded.

Remedy Check the paper settings in [Consmbls./Others] in [Status Monitor/Cancel]. If the paper settings do not match the paper that is loaded, change the settings so that they match.

NOTE

The paper loaded in the paper drawers and multi-purpose tray can be set in (Settings/Registration) → [Preferences] → [Paper Settings]. For more information, see the e-Manual.

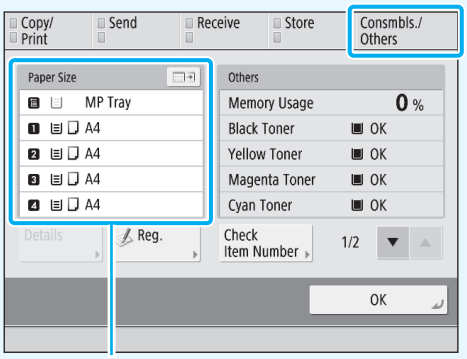

Paper settings

Cause The paper is damp.

Remedy Turn the Dehumidification switch on. If the problem is still not resolved, load paper that is not damp. For information on loading paper, see "Loading Paper," on p.34.

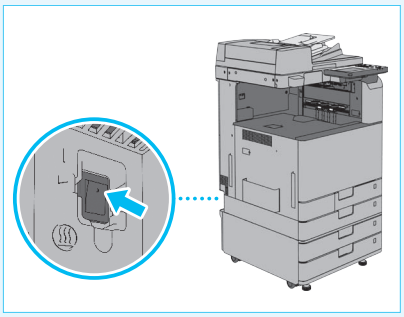

Irregularities Appear in Images/Images Are Faint

Cause The paper is damp.

Remedy Turn the Dehumidification switch on. If the problem is still not resolved, load paper that is not damp. For information on loading paper, see "Loading Paper," on p.34.

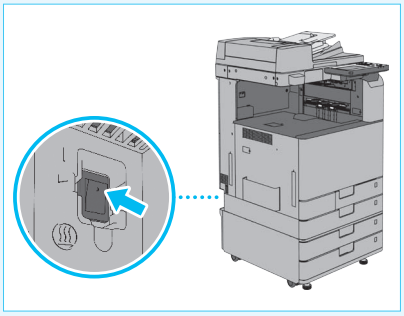

Cause The gradation, density, and color settings need adjustment.

Remedy Adjust the machine with (Settings/Registration) → [Adjustment/Maintenance] → [Auto Adjust Gradation].

Streaks Appear in Images

Cause The document feed scanning area is dirty.

Remedy Clean the document feed scanning area. For information on cleaning the document feed scanning area, see "Cleaning the Document Feed Scanning Area," on p.16.

Cause The dust proof glass is dirty.

Remedy Use the dust proof glass cleaner included with the machine to clean the four areas illustrated below.

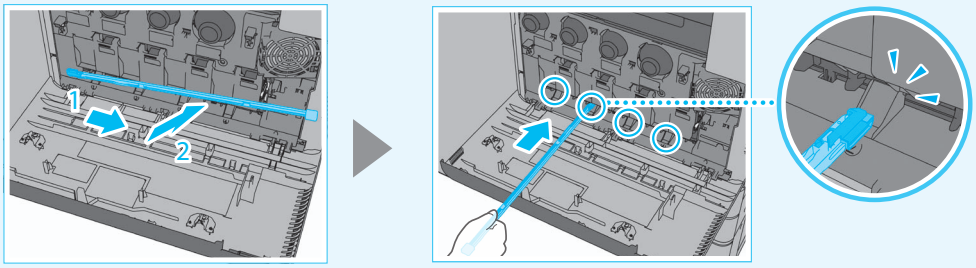

Cause The feeder rollers are dirty.

Remedy Clean the rollers using (Settings/Registration) → [Adjustment/Maintenance] → [Clean Feeder].

Cause The inside of the machine is dirty.

Remedy Clean the inside of the machine using (Settings/Registration) → [Adjustment/Maintenance] → [Clean Inside Main Unit].

Images Are Shifted/Slanted/Skewed

Cause The position of the slide guides is not correct.

Remedy Adjust the guides to match the size of the paper.

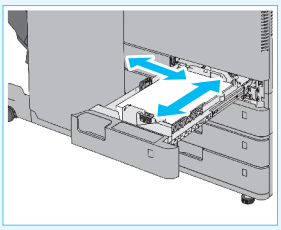

Paper Drawer 1

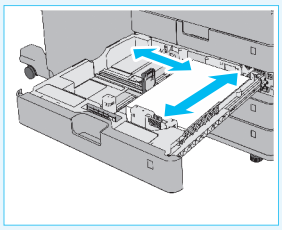

Paper Drawer 2, 3, and 4

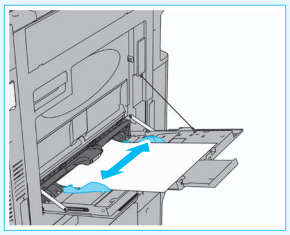

Multi-Purpose Tray

Cause The paper settings do not match the paper that is loaded.

Remedy Check the paper settings in [Consmbls./Others] in [Status Monitor/Cancel]. If the paper settings do not match the paper that is loaded, change the settings so that they match.

NOTE

The paper loaded in the paper drawers and multi-purpose tray can be set in (Settings/Registration) → [Preferences] → [Paper Settings]. For more information, see the e-Manual.

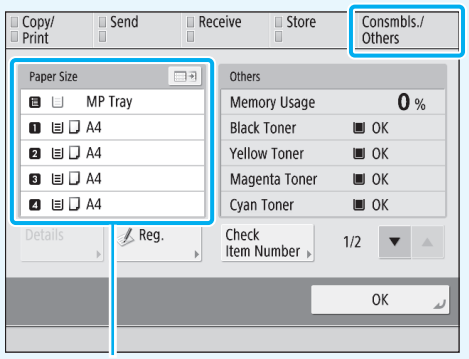

Paper settings

Colors Are Shifted

Adjust the machine with (Settings/Registration) → [Adjustment/Maintenance] → [Auto Correct Color Mismatch]. For more information, see the e-Manual.

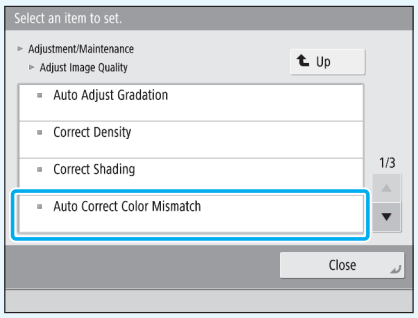

Colors Are Too Light/Color Quality Is Poor

Execute [Full Adjust] in (Settings/Registration) → [Adjustment/Maintenance] → [Auto Adjust Gradation]. If the problem is still not resolved, adjust the density using the [Density] setting of each function. For more information, see the e-Manual.

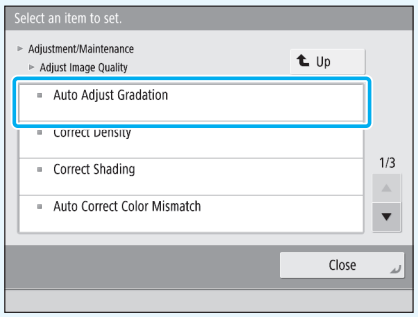

Bleed-through Occurs

Set <Background Density> in [Density] of each function. For more information, see the e-Manual.

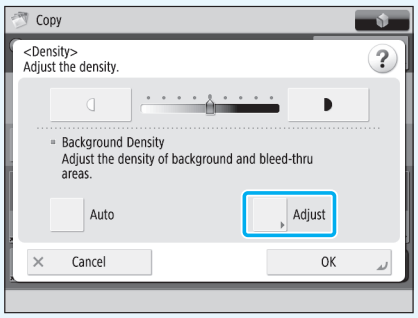

Documents Are Not Printed with the Specified Size

Cause The paper settings in the printer driver or application differ from the paper that is loaded.

Remedy Check the paper settings on the [Printing Preference] sheet of the printer driver, and match them with the paper that is loaded.

The Front and Back Sides of a Document Are Reversed

Cause The paper orientation is incorrect or the paper is set as the front and back are reversed.

Remedy Load the paper in the correct orientation.

- For information on loading paper in paper drawers, see "Loading Paper," on p.34.
- For information on loading paper in the multi-purpose tray, see "How to Print on Special Paper," on p.19.
- For information on loading envelopes, see "How to Print on Envelopes," on p.18.

2

Routine Maintenance

Loading Paper 34
- Loading Paper into a Paper Drawer 34
- Checking the Types of Paper That Can Be Used 36

Replacement Parts 37

Replacing the Stamp Cartridge (For the DADF-AQ1) 38

Replacing the Staple Case in the Staple Unit (Staple Finisher-U1/Booklet Finisher-U1) 39

Replacing the Staple Cartridge in the Saddle Stitcher Unit (Booklet Finisher-U1) 41

Replacing the Staple Case (Inner Finisher-G1) 43

Replacing the Toner Cartridge 45

Replacing the Waste Toner Container 48

Consumables 50
- Recommended Paper 50
- Toner 50
- Stamp Ink Cartridge 51
- Staple Cartridge 51

Loading Paper

If the selected paper runs out, or the selected paper drawer runs out of paper during printing, a screen prompting you to load paper appears on the touch panel display.

CAUTION

When handling paper, take care not to cut your hands on the edges of the paper.

Loading Paper into a Paper Drawer

When loading paper into the paper drawer for the first time, or when a message is displayed on the touch panel display prompting you to load paper, follow the procedure below.

IMPORTANT

- A screen prompting you to load paper also appears if the paper drawer is not fully inserted into the machine. Make sure that the paper drawer is properly in place.
- Do not load the following types of paper into the paper drawers. Doing so may cause a paper jam.
  - Severely curled or wrinkled paper
  - Thin straw paper
  - Paper which has been printed on using a thermal transfer printer
  - The reverse side of paper which has been printed on using a thermal transfer printer
- Fan the stack of paper well before loading it. Paper such as thin paper, recycled paper, pre-punched paper, and heavy paper should be fanned particularly well before loading it.
- Never place paper or any other items in the empty part of the drawer next to the paper stack. Doing so may cause paper jams.
- When you are printing in the Staple mode, do not remove the output sheets that are waiting to be stapled. (Printing and stapling resume after you clear the paper jam.)

NOTE

- Register the size and type of the loaded paper in [Paper Settings] in [Preferences] (Settings/Registration).
- You can use custom paper sizes. (See e-Manual > Settings/Registrations.)
- You can name, register, and edit custom paper types. (See e-Manual > Settings/Registrations.)
- Paper Drawers 3 and 4 can be used if the optional Cassette Feeding Unit-AL1 is attached.
- For information on paper that can be loaded, see e-Manual > Basic Operations.
- If a message prompting you to load paper appears while printing, the remaining prints are automatically made after you load the correct paper. If you select a different paper drawer, the remaining prints are made after you press [OK].
- Press [Cancel] to cancel printing.

01 Grip the handle, and pull out the paper drawer until it stops.

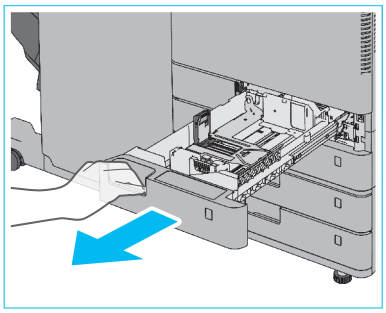

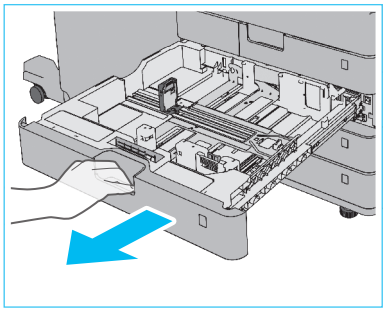

02 When loading paper into the paper drawer for the first time, or when changing the paper size, adjust the position of the paper drawer guides.

1. Slide the left guide while squeezing it on the top to align it with the mark for the desired paper size.
2. Slide the front guide while squeezing it on the top to align it with the mark for the desired paper size.

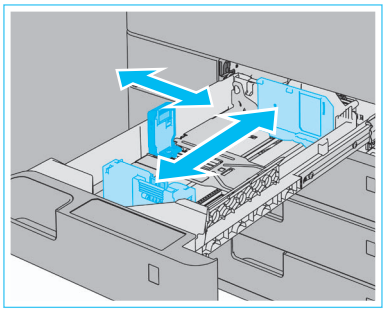

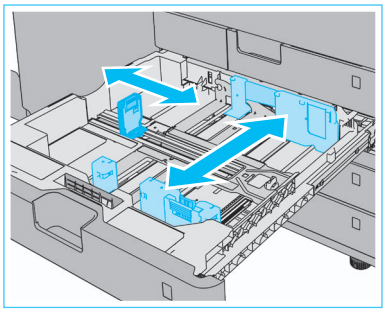

IMPORTANT

Slide the guides until they click into place. If the left guide and front guide are not aligned correctly, the paper size will not correctly appear on the touch panel display. It is also necessary to adjust the guides correctly to avoid causing a paper jam, dirty prints, or making the inside of the machine dirty.

03 Prepare the paper to load.

Open the packaging for the paper and remove the paper stack.

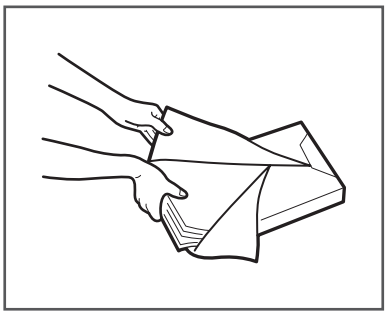

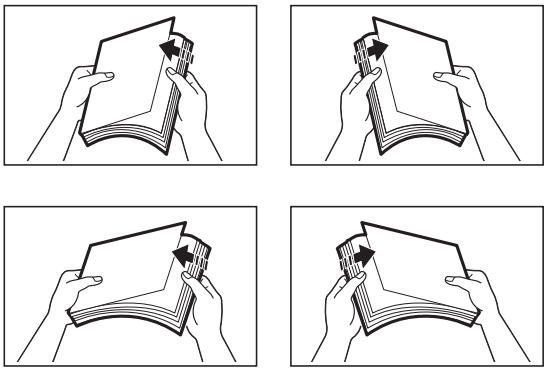

NOTE

- For high-quality printouts, use paper recommended by Canon.
- Before loading paper, always fan the sheets several times, and align the edges to facilitate feeding.

04 Load the paper stack into the paper drawer.

1. Make sure that the paper size setting of the paper drawer matches the size of the paper to load in the paper drawer.
2. Load the paper stack against the right wall of the paper drawer.
3. Gently push the paper drawer back into the machine.

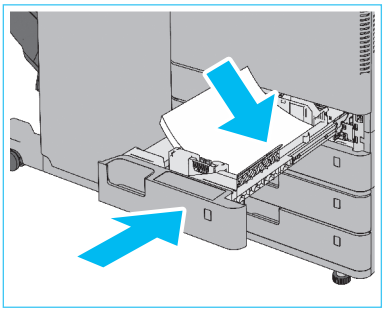

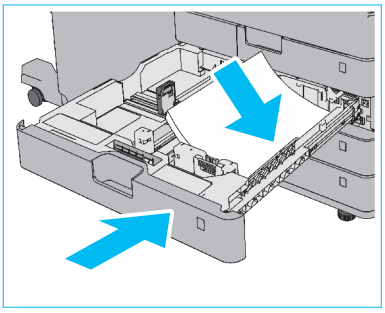

CAUTION

When returning the paper drawer to its original position, be careful not to get your fingers caught, as this may result in personal injury.

IMPORTANT

- Paper which is curled must be straightened out before loading it into the paper drawer.
- You will not be able to make copies or print if you load paper that exceeds the loading limit mark (▲), or if the paper drawer is not completely pushed into the machine.
- Make sure that the height of the paper stack does not exceed the loading limit mark (▲).
- Always check that the paper drawers are in place.

NOTE

- Each paper drawer holds up to 550 sheets of paper (80 g/m^2) or 640 sheets of paper (64 g/m^2).
- If there are instructions on the paper package about which side of the paper to load, follow those instructions.
- When the paper is loaded into the paper drawer, the side facing up is the one printed on.
- Paper may overlap when it is fed or a paper jam may occur, depending on the cut surface of the paper. Changing the paper orientation and loading it again may reduce the effect of the cut surface.
- Rewrap any remaining paper in its original package, and store it in a dry place, away from direct sunlight.
- If paper runs out and printing is stopped, load a new paper stack. Printing restarts after the new paper stack is loaded.

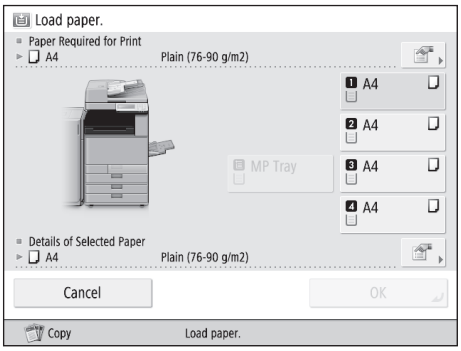

- If you print on the paper which has absorbed moisture, steam may come out from the output area of the machine. This is because the moist on the paper evaporates when the high temperature is applied when a toner is fixed to the paper. It is not a malfunction. (This especially happens in low room temperature.)

05 When loading paper into the paper drawer for the first time, or when changing the paper size, attach a paper size label to the paper drawer.

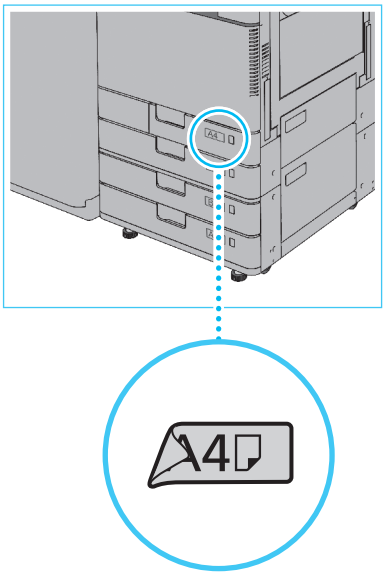

IMPORTANT

The paper size labels included with the machine contain paper sizes not supported by the machine.

06 If the paper has been changed, register the size and type of the loaded paper.

Register the size and type of paper you loaded in the paper drawer in [Paper Settings] in [Preferences] (Settings/Registration). For more information, see e-Manual > Settings/Registration.

Checking the Types of Paper That Can Be Used

For more information on the types of paper you can use, see e-Manual > Basic Operations.

Replacement Parts

This section describes those parts that require replacement and their item numbers. Use a replacement part after checking its item number.

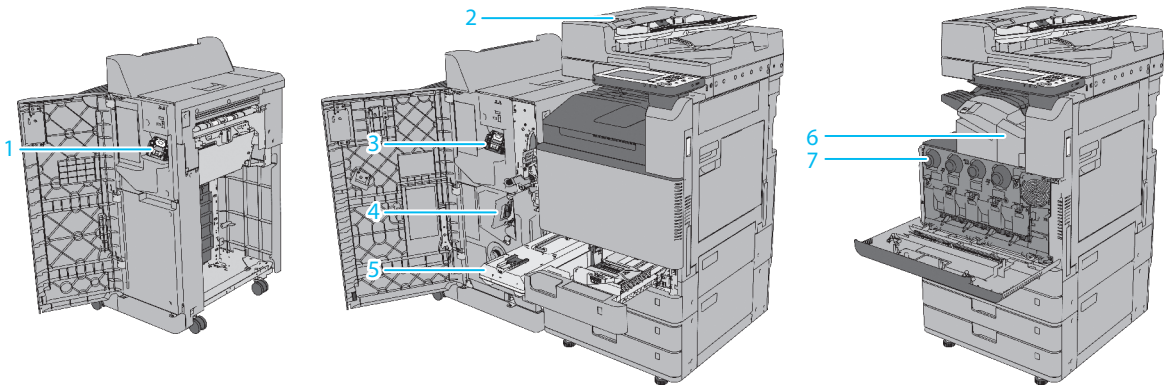

1 **Staple Case for the Staple Finisher-U1**
Item Number: Staple-J1

2 **Stamp Ink Cartridge**
Item Number: Stamp Ink Cartridge-C1

3 **Staple Case for the Booklet Finisher-U1**
Item Number: Staple-J1

4 **Staple Cartridge for the Booklet Finisher-U1**
Item Number:

Staple Cartridge-D2

Staple Cartridge-D3

5 **Waste Toner Container**
Item Number: WT-202

6 **Staple Case for the Inner Finisher-G1**
Item Number: Staple-P1

7 **Toner Cartridge**
Item Number:

Canon NPG-67 Toner Black

Canon NPG-67 Toner Cyan

Canon NPG-67 Toner Magenta

Canon NPG-67 Toner Yellow

For instructions on replacing parts 1 to 7, see the following page.

Replacing the Stamp Cartridge (For the DADF-AQ1)

Originals sent via the feeder can be stamped to indicate that they have been sent. Replace the stamp cartridge when the stamp mark is faint or no longer visible.

CAUTION

When replacing the stamp cartridge, take care not to allow ink to come into contact with your hands or clothing. If ink gets onto your hands or clothing, wash it off immediately with cold water.

NOTE

The DADF-AQ1 is an optional product.

01 Open the covers.

1. Pull the lever → open the feeder cover.
2. Open the inner cover, holding it by its tab.

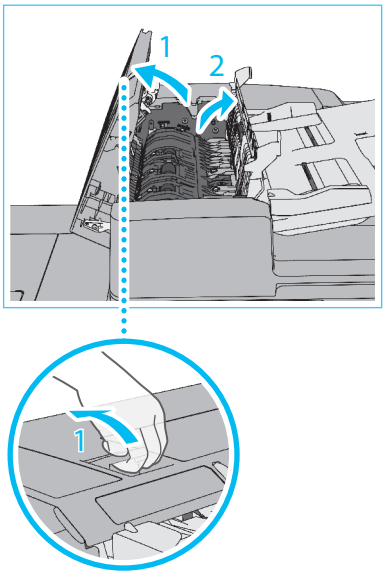

02 Load the stamp cartridge.

1. Remove the old stamp cartridge, using tweezers.
2. Push in the new stamp cartridge until it clicks, using tweezers.

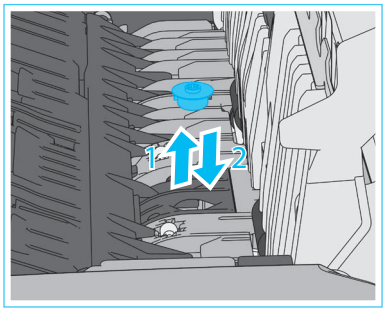

IMPORTANT

- Make sure that the stamp cartridge is not protruding from the surface.
- Insert the stamp cartridge properly, or paper jams may occur.

03 Close the covers.

1. Close the inner cover.
2. Close the feeder cover.

CAUTION

When closing the covers, be careful not to get your fingers caught, as this may result in personal injury.

Replacing the Staple Case in the Staple Unit

(Staple Finisher-U1/Booklet Finisher-U1)

When the stapler unit of the Staple Finisher-U1 or Booklet Finisher-U1 is almost out of staples and the staple case in the stapler unit must be replaced, a screen prompting you to replace the staple case appears on the touch panel display. Follow the procedure described below to replace the staple case.

IMPORTANT

Remove the orange seal that holds the staples together after you place the staple case into the staple cartridge.

NOTE

- The Staple Finisher-U1 and Booklet Finisher-U1 are optional products.
- We recommend that you order staple case from your local authorized Canon dealer before your stock runs out.
- Use only staple cases intended for use with this machine.

01 Open the front cover of the finisher.

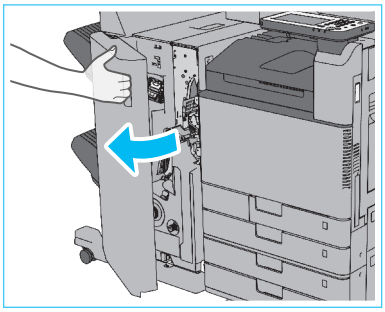

Booklet Finisher-U1

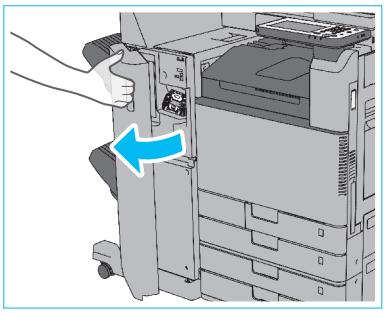

Staple Finisher-U1

02 Pull out the staple cartridge.

1. Hold and pull up the green part to unlock the staple cartridge.
2. Pull out the staple cartridge.

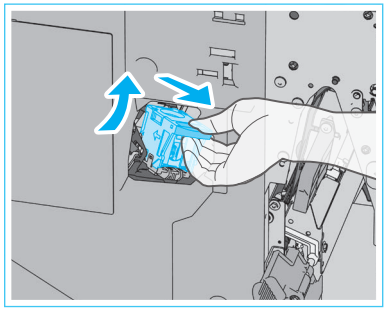

03 Pull out the empty staple case from the staple cartridge.

1. Press the areas indicated by PUSH on both sides of the staple cartridge.
2. Pull up the clear part.
3. Remove the empty staple case.

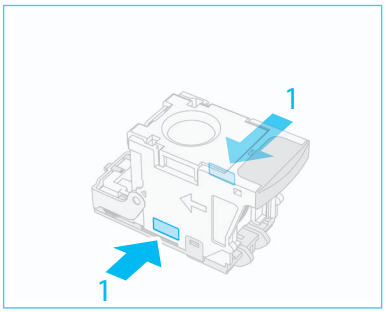

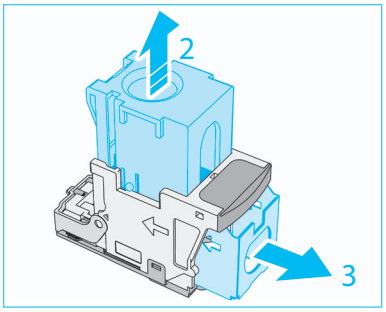

04 Remove the new staple case from its box.

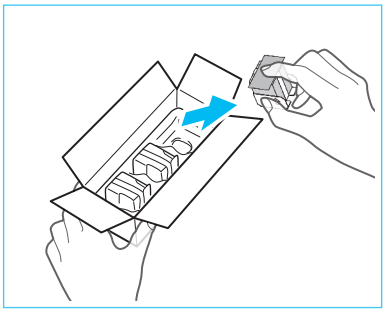

IMPORTANT

Do not remove the seal that holds the staples together with a tag before you place the staple cartridge into the staple case.

05 Insert a new staple case into the staple cartridge.

1. Insert a new staple case.
2. Push down the clear part.
3. Hold the tag of the seal, and pull it straight out.

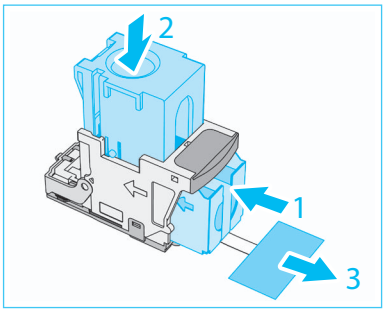

IMPORTANT

- Only one staple case can be inserted at a time.
- Make sure that you pull the seal straight out. If you pull it out at an angle, it may tear.

06 Gently push the staple cartridge back into the finisher and push down firmly until it is securely in place.

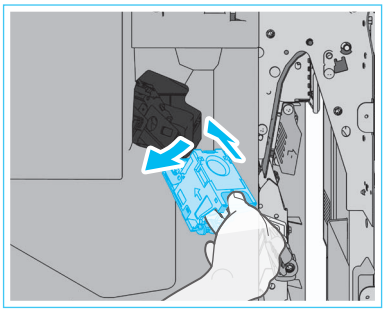

07 Close the front cover of the finisher.

CAUTION

When closing the front cover of the finisher, be careful not to get your fingers caught, as this may result in personal injury.

NOTE

After the cover is closed, the stapler unit may automatically perform a "dry" stapling operation to reposition the staples.

Replacing the Staple Cartridge in the Saddle Stitcher Unit (Booklet Finisher-U1)

When the saddle stitcher unit of the Booklet Finisher-U1 is almost out of staples and the staple cartridge must be replaced, a screen prompting you to replace the staple cartridge appears on the touch panel display. Follow the procedure described below to replace the staple cartridge.

IMPORTANT

If necessary, remove all output paper in the booklet tray before replacing the staple cartridge of the saddle stitcher unit.

NOTE

- The Booklet Finisher-U1 is an optional product.
- We recommend that you order staple cartridge from your local authorized Canon dealer before your stock runs out.
- Use only staple cartridges intended for use with this machine.

01 Open the front cover of the finisher.

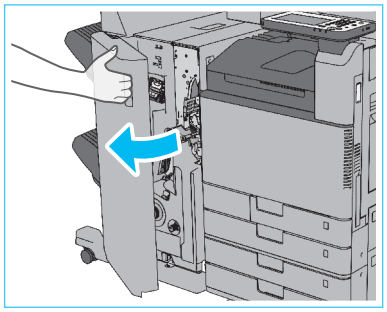

02 Pull out the saddle stitcher unit.

1. Grip the handle of the saddle stitcher unit, and pull out until it stops.
2. Pull the stapler unit of the saddle stitcher unit towards you, and then push it up.

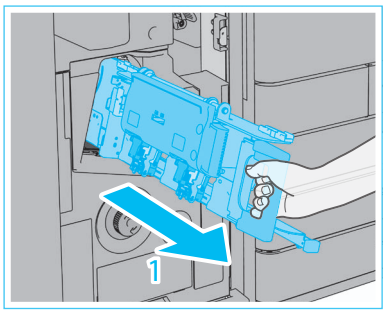

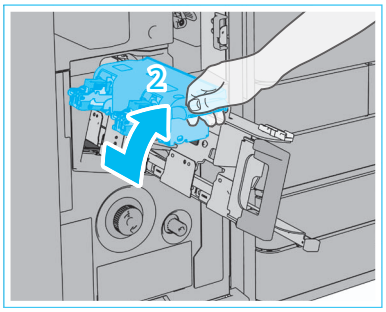

03 Pull out the empty staple cartridge.

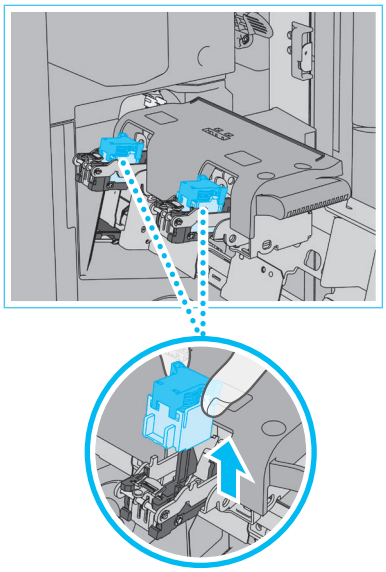

04 Prepare the new staple cartridge.

1. Remove the (two) new staple cartridges from their box.
2. Remove the black part on the end before inserting the staple cartridge.

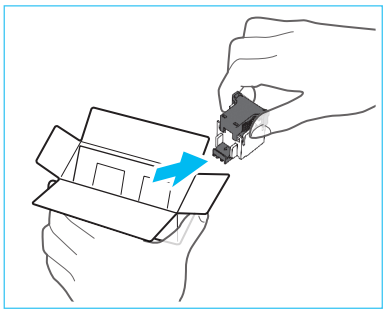

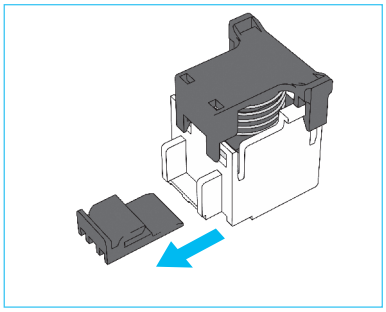

05 Insert the new staple cartridge in until it clicks into place.

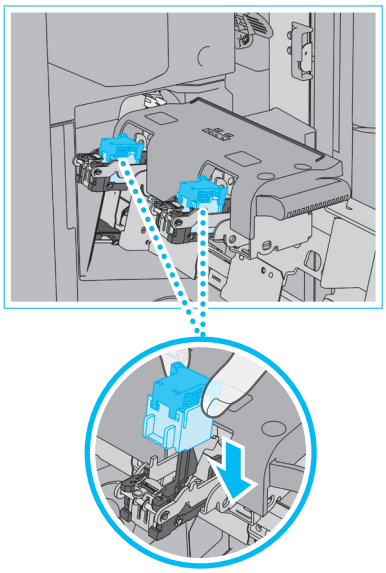

IMPORTANT

- When replacing the staple cartridges, replace both the front and back staple cartridges.
- Only one staple cartridge can be inserted at a time on each side.

06 Push the saddle stitcher unit back into its original position.

1. Pull the stapler unit of the saddle stitcher unit towards you, and then push it down into its original position.
2. Grip the handle of the saddle stitcher unit, and return it to its original position.

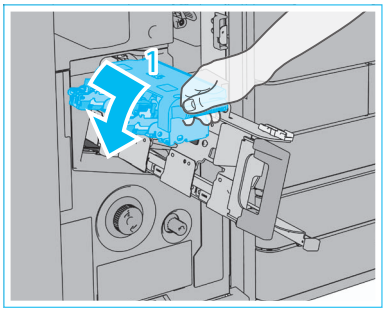

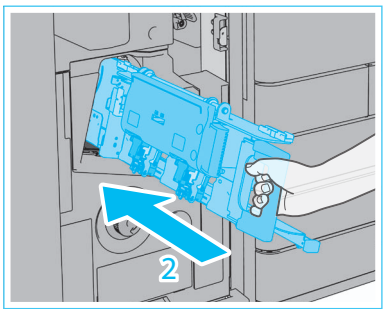

CAUTION

When pushing the saddle stitcher unit back into its original position, be careful not to get your fingers caught, as this may result in personal injury.

07 Close the front cover of the finisher.

CAUTION

When closing the front cover of the finisher, be careful not to get your fingers caught, as this may result in personal injury.

NOTE

When you have replaced the staple case, be sure to manually reposition the staples in the saddle stitcher unit. For more information, see the e-Manual.

Replacing the Staple Case (Inner Finisher-G1)

This section describes how to replace the staple case and staple cartridge in the stapler unit. When the Inner Finisher-G1 is almost out of staples and the staple case must be replaced, a screen prompting you to replace the staple case appears on the touch panel display. Follow the procedure described below to replace the staple case.

NOTE

- The Inner Finisher-G1 is an optional product.
- We recommend that you order staple cases from your local authorized Canon dealer before your stock runs out.
- Use only staple cases intended for use with this machine.

01 Open the front cover of the finisher.

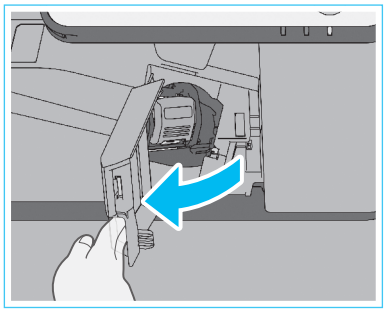

02 Pull out the staple cartridge from the finisher.

1. Push down the green part to unlock the staple cartridge.
2. Push up the staple cartridge slightly and pull it out.

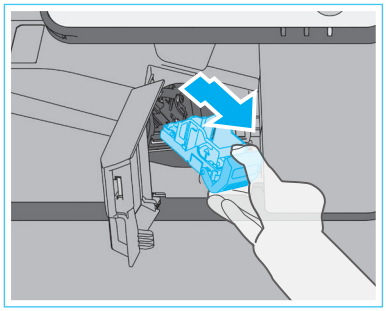

03 Pull out the empty staple case from the staple cartridge.

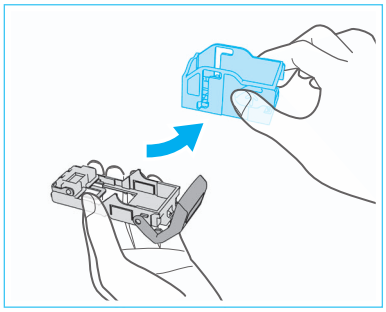

04 Remove the new staple case from its box.

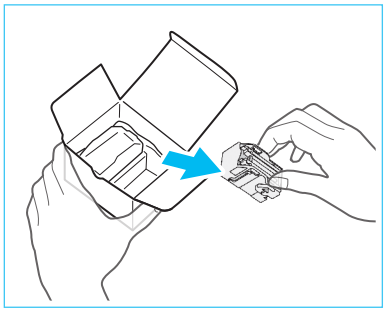

05 Insert a new staple case into the staple cartridge.

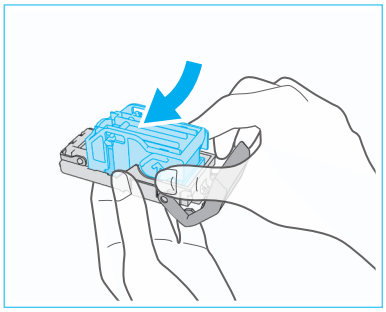

IMPORTANT

Only one staple case can be inserted at a time.

06 Push the staple cartridge into the finisher until it clicks into place.

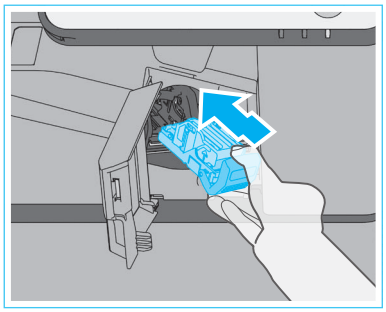

07 Close the front cover of the finisher.

CAUTION

When closing the front cover of the finisher, be careful not to get your fingers caught, as this may result in personal injury.

NOTE

After the cover is closed, the stapler unit may automatically perform a "dry" stapling operation to reposition the staples.

Replacing the Toner Cartridge

When there is only a small amount of toner remaining inside the machine, a message appears on the touch panel display. You can continue printing, but at this time you should purchase a new toner cartridge to have it available when needed.

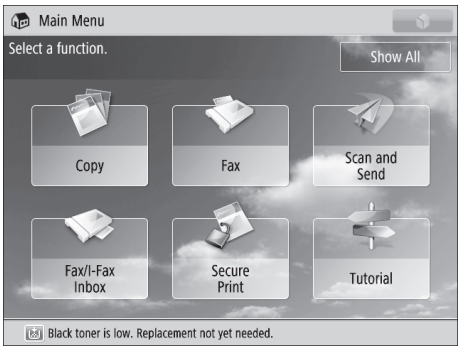

When the Black toner or all of the toners run out completely and prints can no longer be made, a screen with instructions on how to replace the toner cartridge appears on the touch panel display. Follow the procedure described below to replace the toner cartridge.

If you press [Close], you can continue operations, such as setting modes and scanning originals, even if you do not replace the toner cartridge immediately.

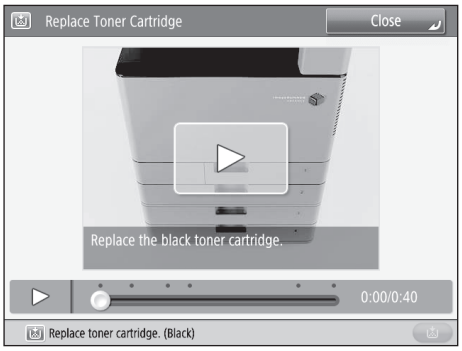

WARNING

- Do not burn or throw used toner cartridges into open flames, as this may cause the toner to ignite, resulting in burns or a fire.
- If you accidentally spill or scatter toner, carefully wipe up the loose toner with a damp, soft cloth and avoid inhaling any toner dust. Do not use a vacuum cleaner that is not equipped with safety measures to prevent dust explosions to clean up loose toner. Doing so may cause damage to the vacuum cleaner or result in a dust explosion due to static discharge.

CAUTION

- Keep toner out of the reach of small children.
- If toner is ingested, consult a physician immediately.
- If toner gets onto your hands or clothing, wash it off immediately with cold water. Washing it off with warm water will set the toner, and make it impossible to remove the toner stains.

IMPORTANT

- Use only toner cartridges intended for use with this machine.
- For information on the supported Canon genuine toner, see "Replacement Parts," on p.37.
- Do not replace toner cartridges until the message prompting you to do so appears.
- Do not attempt to replace the toner cartridge while the machine is printing.
- The color of the toner to be replaced is displayed on the touch panel display. If multiple toner cartridges must be replaced, replace the toner cartridges in the following order: Black, Yellow, Magenta, Cyan.
- If you continue copying or printing in black-and-white after cyan, magenta, or yellow toner runs out, do not remove the depleted toner cartridges from the machine.
- You can set the machine to display a message indicating that the remaining toner is low. (See e-Manual > Settings/Registrations.)

NOTE

- If toner runs out during a print job, the remaining prints are made after you replace the toner cartridge.
- If black toner is left, you can continue copying and printing in black-and-white.
- After replacing toner cartridges, if printed colors are different from the colors printed before you replaced the toner cartridges, perform [Auto Adjust Gradation] in [Adjustment/Maintenance]. (See e-Manual > Settings/Registrations.)

01 Press .

NOTE

If the Black toner or all of the toners run out, this step is not necessary.

02 Remove the toner cartridge of the displayed color.

1. Open the front cover of the main unit.
2. Pull out the toner cartridge to replace.

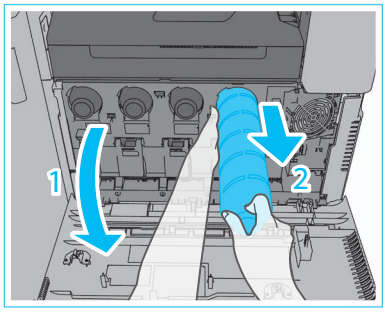

Pull the toner cartridge out halfway, and then remove it completely while supporting it and keeping it straight with your other hand from underneath.

WARNING

Do not burn or throw used toner cartridges into open flames, as this may cause the toner remaining inside the cartridges to ignite, resulting in burns or a fire.

IMPORTANT

Do not subject the toner cartridge to shock or hit it. Doing so may cause the toner cartridge to leak.

03 Prepare the new toner cartridge.

1. Open the package of the toner cartridge, and remove the toner cartridge.

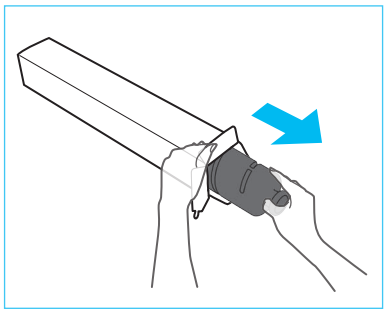

2. Hold the new toner cartridge in both hands as shown in the illustration, and shake it vertically approximately 10 times.

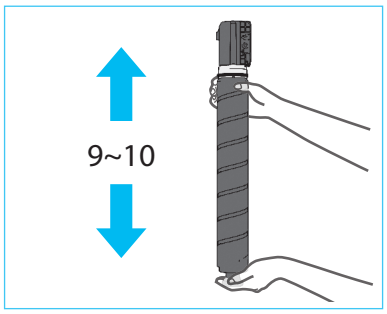

IMPORTANT

Do not allow the white part of the toner cartridge to face down. Doing so may cause the toner to not output properly.

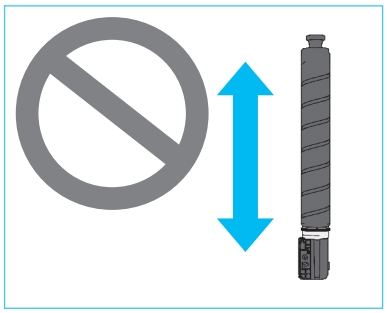

04 Insert the new toner cartridge.

1. Match the new toner cartridge with the slot on the main unit as shown in the illustration.
2. Push the new toner cartridge in as far as possible.

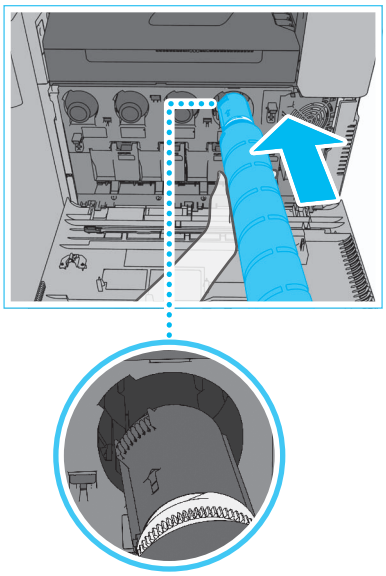

NOTE

Support the new toner cartridge with your hand from underneath while pushing it into the machine with your other hand.

05 Close the front cover of the main unit.

CAUTION

When closing the cover, be careful not to get your fingers caught, as this may result in personal injury.

If the Following Screen Is Displayed after Replacing the Toner Cartridge

After replacing the toner cartridge, the following screen may appear.

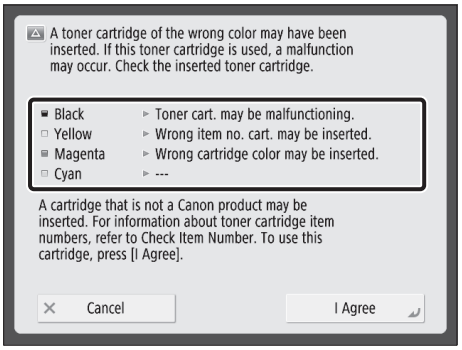

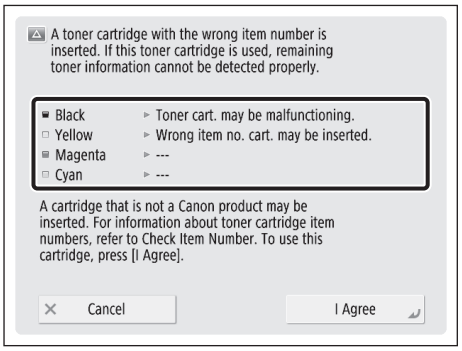

The status of each of the toner cartridges attached to the machine is displayed in the enclosed area of the screen, shown above.

Message	Status
Wrong cartridge color may be inserted.	A toner cartridge of the wrong color is inserted.
Wrong item no. cart. may be inserted.	A toner cartridge with the wrong item number is inserted.
Toner cart. may be malfunctioning.	The inserted toner cartridge may have been damaged.
----	The correct toner cartridge is inserted.

To continue using the toner cartridge, press [I Agree]. If you select this option, the operation of the machine is not guaranteed.

To replace the toner cartridge, press [Cancel].

If you are not sure about the remedies, contact your local authorized Canon dealer from which you purchased the toner cartridge.

Replacing the Waste Toner Container

When the waste toner container nears capacity, a message appears on the touch panel display. In this case, you should prepare a new waste toner container.

Even if you do not replace the waste toner container immediately, you can perform printing for a while. The number of prints you can make depends on the content you print.

When the waste toner container is full, a screen with instructions on how to replace the waste toner container appears on the touch panel display. Follow the procedure described below to replace the waste toner container.

WARNING

- Do not burn or throw used waste toner containers into open flames. Also, do not store waste toner containers in places exposed to open flames, as this may cause the toner to ignite, resulting in burns or a fire.
- If you accidentally spill or scatter toner, carefully wipe up the loose toner with a damp, soft cloth and avoid inhaling any toner dust. Do not use a vacuum cleaner that is not equipped with safety measures to prevent dust explosions to clean up loose toner. Doing so may cause damage to the vacuum cleaner or result in a dust explosion due to static discharge.

CAUTION

- If toner is ingested, consult a physician immediately.
- If toner gets onto your hands or clothing, wash it off immediately with cold water. Washing it off with warm water will set the toner, and make it impossible to remove the toner stains.

IMPORTANT

- Your local authorized Canon dealer will dispose of used waste toner containers.
- Used toner cannot be reused. Do not mix new and used toner together.
- Use only waste toner containers intended for use with this machine.
- Do not replace the waste toner container before the message prompting you to replace it appears on the touch panel display.

NOTE

If the waste toner container must be replaced during a print job, the remaining prints are made after the new waste toner container is installed.

01 Press .

02 Open the waste toner cover.

1. Pull out Paper Drawer 1.
2. Pull the tab, and open the cover of the waste toner container.

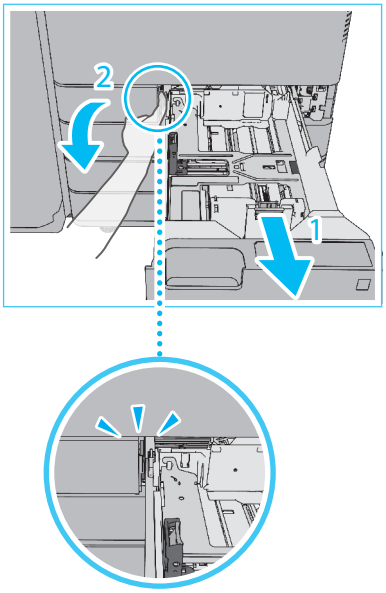

03 Remove the waste toner container.

1. Grip the handle, and pull out the waste toner container slowly until the entire handle on top can be seen.
2. Grip the handle on top, and remove the waste toner container.

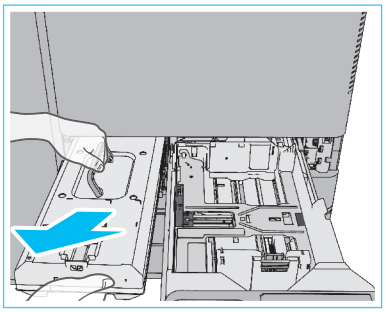

CAUTION

Be careful not to drop the waste toner container when you pull it out. Doing so may cause injury.

04 Prepare a new waste toner container, and store the removed waste toner container.

1. Take the new waste toner container out of the box.
2. Insert the removed waste toner container into a bag.

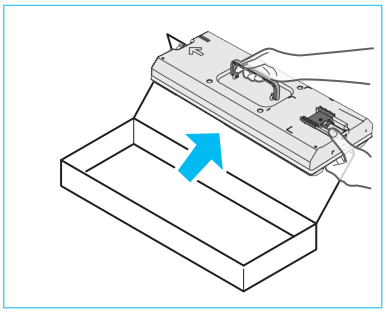

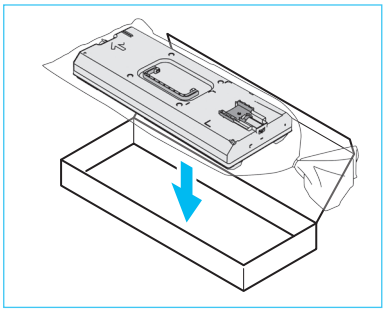

- Tie up the opening of the bag as indicated in the diagram, so that the waste toner does not spill out.

05 Insert the new waste toner container into the main unit.

1. Insert the waste toner container with the Canon logo on top of the container towards the back of the machine, and push it in to load it.
2. Close the waste toner cover and the paper drawer 1.

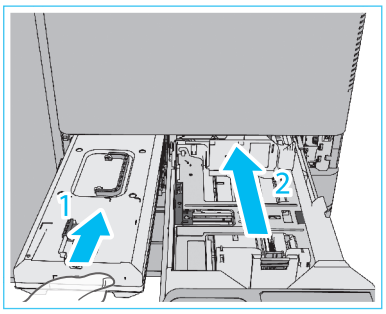

Consumables

The following consumables are available from Canon. For more information, contact your local authorized Canon dealer. We recommend that you order paper stock and toner from your local authorized Canon dealer before your stock runs out.

Recommended Paper

In addition to plain paper (A3, B4, A4, B5, and A5 sizes), recycled paper, color paper, transparencies (recommended for this machine), tracing paper, labels, and other types of paper stock are available.

CAUTION

Do not store paper in places exposed to open flames, as this may cause the paper to ignite, resulting in burns or a fire.

IMPORTANT

- Some commercially available paper types are not suited for this machine. Contact your local authorized Canon dealer when you need to purchase paper.
- To prevent moisture build-up, tightly wrap any remaining paper in its original package for storage.

NOTE

For high-quality printouts, use paper recommended by Canon.

Toner

Confirm that the code on the front cover of the machine and the one on the package of the genuine toner are the same.

NPG

If a message prompting you to replace the toner cartridge appears on the touch panel display, replace the used toner cartridge of the displayed color with a new one.

Toner comes in four colors: black, cyan, magenta, and yellow.

Check the toner color that you need to replace before ordering toner from your local authorized Canon dealer. Also, when replacing the toner cartridge, make sure that you replace toner of the correct color.

Use only toner cartridges intended for use with this machine.

For optimum print quality, using Canon genuine toner is recommended.

For information on the dedicated toner cartridge item numbers for this machine, see "Replacement Parts," on p.37.

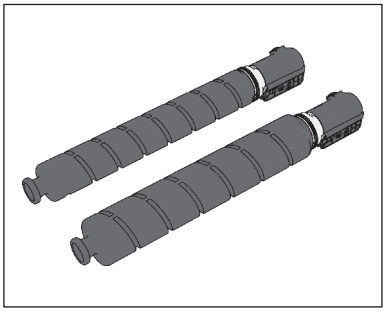

WARNING

- Do not burn or throw used toner cartridges into open flames, as this may cause the toner remaining inside the cartridges to ignite, resulting in burns or a fire.
- Do not store toner cartridges in places exposed to open flames, as this may cause the toner to ignite, resulting in burns or a fire.
- If you accidentally spill or scatter toner, carefully wipe up the loose toner with a damp, soft cloth and avoid inhaling any toner dust. Do not use a vacuum cleaner that is not equipped with safety measures to prevent dust explosions to clean up loose toner. Doing so may cause damage to the vacuum cleaner or result in a dust explosion due to static discharge.

CAUTION

- Keep toner out of the reach of small children.
- If toner is ingested, consult a physician immediately.

IMPORTANT

- Store toner cartridges in a cool location, away from direct sunlight. (The recommended storage conditions are temperatures below 30°C and humidity below 80%.)
- Do not store toner cartridges in an upright position.
- [Be careful of counterfeit toners]
  Please be aware that there are counterfeit Canon toners in the marketplace. Use of counterfeit toner may result in poor print quality or machine performance. Canon is not responsible for any malfunction, accident or damage caused by the use of counterfeit toner.
  For more information, see canon.com/counterfeit.

CAUTION

For cardiac pacemaker users:
This drum unit emits low level magnetic flux. If you use a cardiac pacemaker and feel abnormalities, please move away from the drum unit, and consult a physician.

Stamp Ink Cartridge

The stamp ink cartridge is used to stamp originals. Use the tweezers provided to remove and replace the stamp ink cartridge.

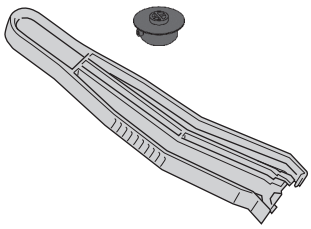

Stamp Ink Cartridge-C1

Staple Cartridge

Finisher	Name	Shape
Staple Finisher-U1	Staple-J1	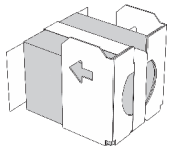
Booklet Finisher-U1	Staple Cartridge-D2 Staple Cartridge-D3	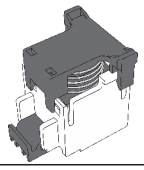
	Staple-J1	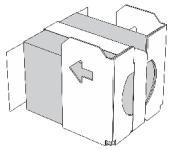
Inner Finisher-G1	Staple-P1	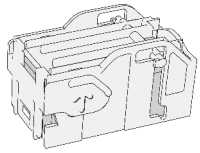

Genuine Consumables

Canon continuously develops technology innovations in Canon Toners, Drums and Cartridges, specifically designed for use in Canon Multi-Functional machines.

Experience the benefits of optimal print performance, print volume and high quality outputs, achieved through Canon's new advanced technologies. Therefore, the use of Canon genuine consumables is recommended for your Canon Multi-Functional machines.

CANON
GENUINE
TONER, CARTRIDGE & PARTS

3

Before Using This Machine

Parts and Their Functions 54
External View 54
Internal View 55
Control Panel Parts and Functions 56
Main Power and Energy Saver Key 58
How to Turn ON the Main Power 58
Energy Saver Key 59
Shutting Down the Machine 59
Backing Up/Exporting Data 60
Data You Can Back Up 60
Data You Can Export 60
Specifications 61
Main Unit 61
DADF-AQ1 64
Cassette Feeding Unit-AL1 64
Inner Finisher-G1 65
Staple Finisher-U1 67
Booklet Finisher-U1 68
Inner 2way Tray-J1 69
Copy Tray-J2 70
Copy Card Reader-F1 70
Super G3 FAX Board-AR1 71
Send Function (Scan Features) 72
Send Function (E-Mail and I-Fax Features) 73
Network Environment (Hardware Specifications) 73
Network Environment (Software Specifications) 74
Printer Settings (Software Specifications) 74

Parts and Their Functions

This section provides you with the names and functions of all the parts of the machine. For more information on optional products, parts and their functions, see e-Manual > Optional Products/Software.

External View

When the Cassette Feeding Unit-AL1 and DADF-AQ1 are attached:

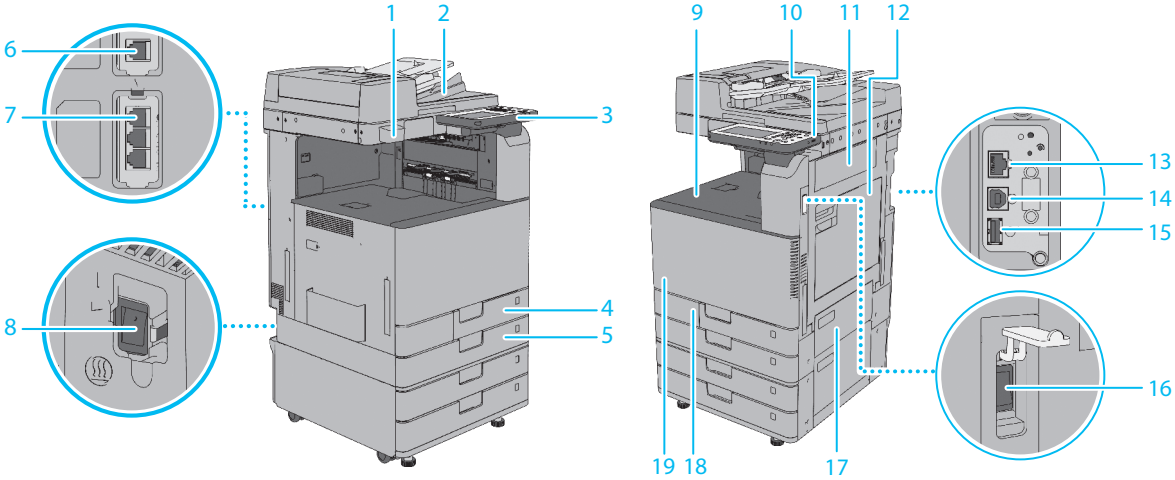

1 Glass Cleaning Sheet Storage Box
Use this box to store sheets for cleaning the platen glass.

2 Feeder
Originals placed in the feeder are automatically fed sheet by sheet to the scanning area. The feeder also automatically turns over two-sided originals to make one- or two-sided copies.

3 Control Panel
The control panel includes the keys, touch panel display, and indicators required for operating the machine. (See "Control Panel Parts and Functions," on p.56.)

4 Paper Drawer 1
Holds up to 550 sheets of paper (80 g/m^2).

5 Paper Drawer 2
Holds up to 550 sheets of paper (80 g/m^2).

6 LINE2
Use this port to connect the Super G3 2nd Line Fax Board to the machine.

7 LINE 1
Use this port to connect a fax line to the machine.

8 Dehumidification Switch
Use this switch when paper in a paper drawer is damp to dry the paper by warming it up, in order to prevent printing problems.

9 Output Tray
Prints are output to this tray.

10 USB Port (1)
Use the USB port to connect USB memory, external hard disks, and other devices to the machine.

11 Right Cover of the Main Unit
Open this cover when clearing a paper jam inside the main unit. (See e-Manual > Problem Solving.)

12 Multi-Purpose Tray
Use the multi-purpose tray to feed paper manually, and for loading nonstandard paper stock. (See e-Manual > Basic Operations.)

13 LAN Port
Use an Ethernet cable to connect the machine to a network.

14 USB Port (2)
Use the USB port to insert a USB cable for connecting to a computer.

15 USB Port (3)
Use the USB port to connect external hard disks and other devices to the machine.

16 Main Power Switch
Press to the "I" side to turn ON the machine. (See "Main Power and Energy Saver Key," on p.58.)

17 Upper Right Cover of the Paper Drawer
Open this cover when clearing a paper jam. (See e-Manual > Problem Solving.)

18 Waste Toner Cover
Open this cover when replacing the waste toner container.

19 Toner Code
This code indicates the type of genuine toner that can be used with the machine. Use toner with a code that includes the same letters as the code on the front cover of the machine.

Internal View

When the Cassette Feeding Unit-AL1 and DADF-AQ1 are attached:

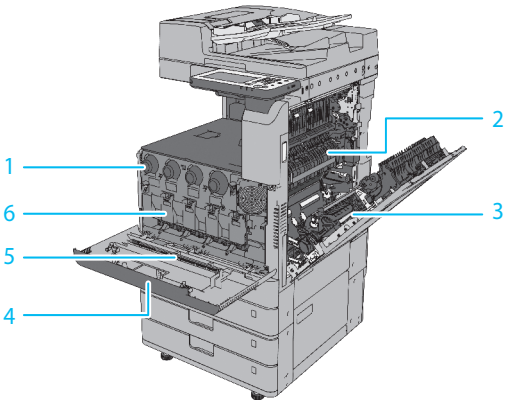

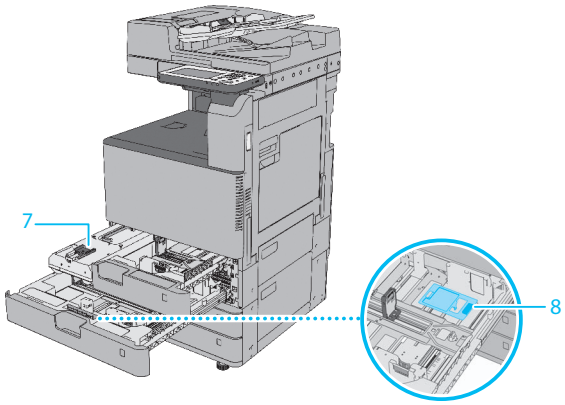

1 Toner Cartridge
When toner runs out, pull out the toner cartridge and replace it with a new one (p.45.)

2 Fixing Assembly
The unit that fixes toner onto paper.

3 Duplexing Unit
If paper is jammed in the duplexing unit, remove the paper jam. (See e-Manual > Problem Solving.)

4 Front Cover of the Main Unit
Open this cover to replace the toner cartridge and the drum unit.

5 Dust Proof Glass Cleaner
Use this cleaner when cleaning the dust proof glass.

6 Drum Unit
The unit that sets toner onto paper.

7 Waste Toner Container
When the waste toner container becomes full, replace it with a new one (p.48.)

8 Envelope Feeder Attachment A
Used with Paper Drawer 2. Envelopes are loaded vertically.

Control Panel Parts and Functions

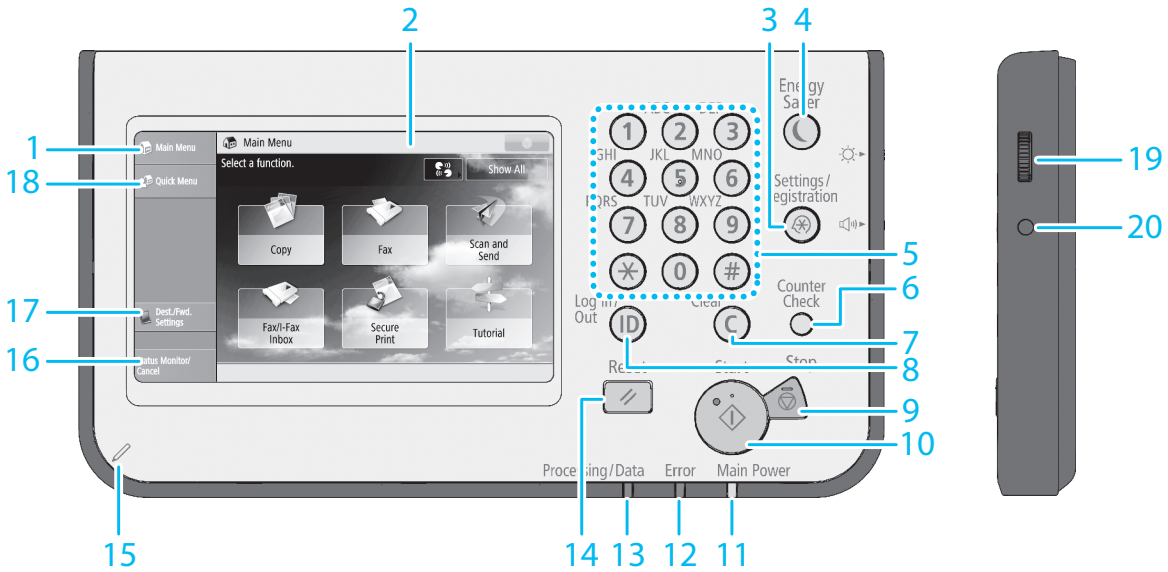

1 [Main Menu]
Press to display the Main Menu screen. If the Main Menu screen is not displayed when using a function, it is necessary to press [Main Menu] before using the function.

2 Touch Panel Display
The settings screen for each function is shown on this display. Six function keys are displayed by default.

3 Settings/Registration key
Press to specify settings/registration.

4 Energy Saver key
Press to set or cancel the Sleep mode. Lights when the machine enters the Sleep mode. For more information on the Auto Sleep mode, see "Main Power and Energy Saver Key," on p.58.

5 Numeric keys
Press to enter numerical values.

6 Counter Check key
Press to display the copy and print count totals on the touch panel display.

7 Clear key
Press to clear entered values or characters.

8 ID (Log In/Out) key
Press to log in/out when a login service such as User Authentication or DepartmentID Authentication has been set.

9 Stop key
Press to stop a job in progress, such as a scan, copy, or fax (scanning only) job.

10 Start key
Press to start an operation.

11 Main Power Indicator
Lights when the main power is turned On.

12 Error Indicator
Flashes or lights if there is an error in the machine. When the Error indicator flashes, follow the instructions that appear on the touch panel display. When the Error indicator maintains a steady red light, contact your local authorized Canon dealer.

13 Processing/Data Indicator
Flashes or blinks green when the machine is performing operations, and maintains a steady green light when there is a job or received data waiting to be processed. However, when the machine is in the complete Sleep mode, the light will not turn on, even if the received data is stored in memory.

Control Panel Parts and Functions

14 Reset key
Press to restore the standard settings of the machine.

15 Edit Pen
Use when operating the touch panel display, such as to enter characters.

16 [Status Monitor/Cancel]
Press to check the status of jobs or to cancel print jobs. Also, you can check the status of the machine such as the amount of paper remaining in the paper source.

17 [Dest./Fwd. Settings]
Press to register e-mail addresses and phone numbers, and set forwarding destinations for received documents.

18 [Quick Menu]
Press to display functions registered in the Quick Menu.

19 Brightness Adjustment Dial
Use to adjust the brightness of the touch panel display.

20 Volume Settings key
Press to display the screen for adjusting settings, such as the transmission volume and fax sending/receiving alarm volume.

Adjusting the Angle of the Control Panel

The angle of the control panel is adjustable as shown below.

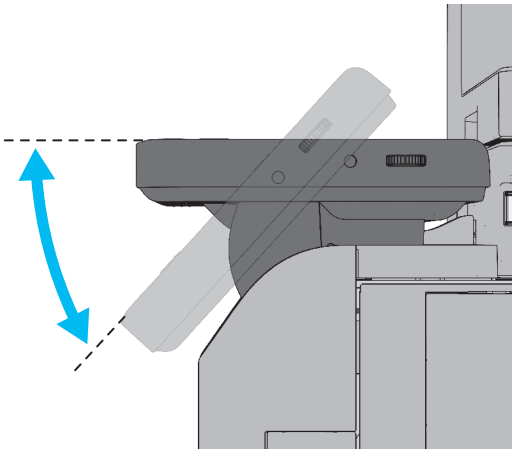

IMPORTANT

Do not apply excess force to the control panel when adjusting its angle.

Main Power and Energy Saver Key

This section describes how to use the main power switch and the Energy Saver key.

How to Turn ON the Main Power

Make sure that the power plug is firmly inserted into the power outlet.

WARNING

Do not connect or disconnect the power cord with wet hands, as this may result in electrical shock.

IMPORTANT

If you want to turn OFF the main power and then back ON again, wait for at least 10 seconds after the main power indicator is turned OFF before turning ON the main power. However, when [Quick Startup Settings for Main Power] is enabled, if you do not wait more than 20 seconds after the main power indicator is turned OFF, quick startup is not performed.

01 Press the switch to the "I" side to turn the main power ON.

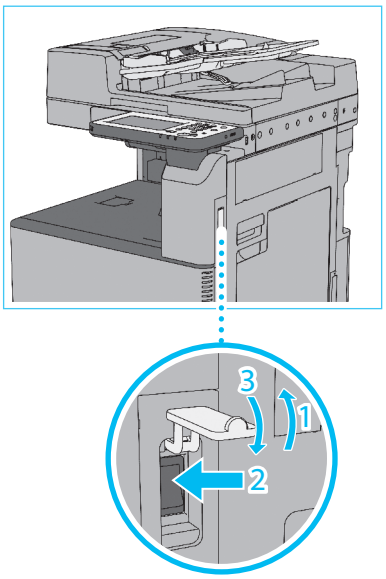

The main power indicator on the control panel lights when you turn ON the main power switch.

Various screens appear when system software is loading.

If you are using a login service, log in using the procedure for the login service you are using.

NOTE

- You can change the default display that appears after the machine is turned ON from [Default Screen after Startup/Restoration] on the Settings/Registration screen. (See e-Manual > Settings/Registration.)
- If this machine is connected to a powered off Macintosh computer by USB cable, the computer may turn on automatically when this machine does. In this case, disconnect the USB cable from the machine. You may also be able to solve this problem by using a USB hub between the machine and the computer.
- The response of the buttons and keys may not be optimal immediately after you turn ON the main power of the machine.
- If you set [Quick Startup Settings for Main Power] to 'On' in [Preferences] (Settings/Registration), the tone sounds when turning ON the main power of the machine. (Depending on the conditions, the machine does not startup quickly and the tone does not sound.)
- Depending on the conditions under which the machine is being used, the machine may not startup quickly if you set [Quick Startup Settings for Main Power] to 'On'. For more information, see e-Manual > Settings/Registration.
- For information on the method for logging in using DepartmentID Management with the Copy Card Reader-F1, see e-Manual > Optional Products/ Software.
- For information on the method for logging in when User Authentication is set, see the e-Manual.
- For information on the method for logging in when DepartmentID Management is set, see the e-Manual.

Energy Saver Key

You can press (Energy Saver) to make the machine enter the Sleep mode and reduce power consumption.

The machine also enters the Sleep mode if no operations have been performed for a certain period of time. You can press (Energy Saver) to cancel the Sleep mode.

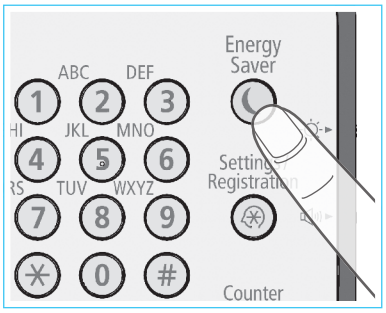

NOTE

The machine can receive and print documents from a personal computer when it is in the Sleep mode. I-fax and fax documents can also be received while the machine is in the Sleep mode.

Shutting Down the Machine

This machine performs a procedure to protect the memory when the machine is shut down.

This enables the machine to be shut down safely, even if there are any jobs being processed, or a MEAP application is running while the machine is shutting down.

01 Press the switch to the "⏻" side to turn the main power OFF.

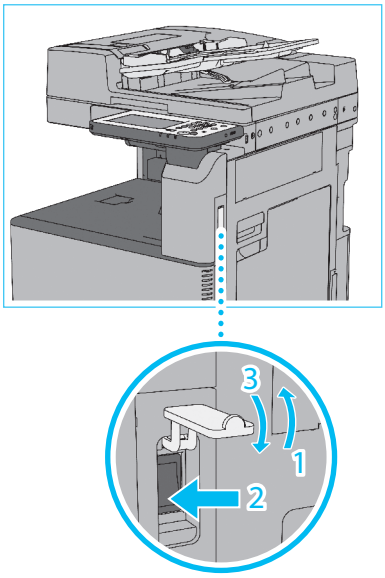

IMPORTANT

- Do not turn the main power OFF while using the Fax/I-Fax function. Sending or receiving I-fax or fax documents cannot be completed when the main power is turned OFF.
- The machine may take some time to completely shutdown. Do not unplug the power cord until the main power indicator of the machine is Off.
- If the main power is turned OFF while scanning or printing, a paper jam may occur.

NOTE

- If [Quick Startup Settings for Main Power] in [Preferences] (Settings/Registration) and [Sleep Mode Tone], which appears when you press on the control panel, are both set to 'On', the tone sounds when turning OFF the main power of the machine. (Depending on the situations, the machine does not startup quickly and the tone does not sound.)
- You can shut down the machine from the Remote UI using the Remote Shutdown mode. For more information, see e-Manual > Remote UI.

Backing Up/Exporting Data

Various data such as the received data, stored data, address book, and Settings/Registration settings are stored on the hard disk of the machine. A malfunction in the hard disk may cause these data to be lost. Please regularly back up/export your important data. Please note that Canon will not be held responsible for any damages caused by the loss of data.

NOTE

- The passwords and PINs are backed up at the same time. However, some of the passwords may not be backed up, depending on the type of the password.
- If your machine is not connected to a network, it is recommended that you print and store important information such as the Address Book.
- You can connect USB memory to the machine to export data using the USB memory.

Data You Can Back Up

You can use the backup function of the Remote UI to save a copy of data to your computer.

- Mail Box Settings
- Memory RX Inbox Settings
- Confidential Fax Inbox Settings
- Files in the Mail Box/Confidential Fax Inbox/Memory RX Inbox
- License files for MEAP applications

Data You Can Export

You can use the export function of the Remote UI to save the converted data to your computer. The data can be imported to another imageRUNNER ADVANCE series machine.

Batch Exporting

You can use the batch export function to export the data of your choice from various types of data.

- Settings/Registration Basic Information
- Paper Type Management Settings
- Forwarding Settings
- Mail Box related settings
- DepartmentID Management Settings
- Key Settings
- Certificate/Certificate Revocation List (CRL) Settings
- Main Menu Settings
- Web Access Settings
- Favorite Settings
- Address Book
- Authenticated user settings
- Personal Setting Information
- Quick Menu Settings
- MEAP Application Setting Information

Individual Exporting

You can individually export the data of your choice.

- Address Lists
- Device Settings (Forwarding Settings, Address Book, Send Function Favorite Settings)
- Printer Settings
- Paper Information
- Web Access Favorites
- User information registered in the Local Device Authentication of User Authentication

Specifications

Specifications are subject to change without notice for product improvement or future release.

Main Unit

Item	Specifications
Name	Canon imageRUNNER ADVANCE C3330/C3325/C3320
Type	Reader-printer separated, Desktop
Color Supported	Full Color
Resolution for Reading	600 x 600 dpi
Resolution for Writing	1,200 x 1,200 dpi
Number of Tones	256
Available Paper	Paper Drawer: Weight: 52 to 220 g/m^2 Type: Thin (52 to 63 g/m^2), Plain 1 (64 to 75 g/m^2), Plain 2 (76 to 90 g/m^2), Plain 3 (91 to 105 g/m^2), Recycled 1 (64 to 75 g/m^2), Recycled 2 (76 to 90 g/m^2), Recycled 3 (91 to 105 g/m^2), Color, Pre-Punched, Bond, Heavy 1 (106 to 128 g/m^2), Heavy 2 (129 to 163 g/m^2), Heavy 3 (164 to 220 g/m^2), Transparency, and Envelopes Multi-Purpose Tray: Weight: 52 to 256 g/m^2 Type: Thin (52 to 63 g/m^2), Plain 1 (64 to 75 g/m^2), Plain 2 (76 to 90 g/m^2), Plain 3 (91 to 105 g/m^2), Recycled 1 (64 to 75 g/m^2), Recycled 2 (76 to 90 g/m^2), Recycled 3 (91 to 105 g/m^2), Color, Pre-Punched, Bond, Heavy 1 (106 to 128 g/m^2), Heavy 2 (129 to 163 g/m^2), Heavy 3 (164 to 220 g/m^2), Heavy 4 (221 to 256 g/m^2), Tracing, Coated, Labels, Transparency, and Envelopes
Acceptable Originals	Sheet, book, and three dimensional objects (up to 2 kg)
Paper Sizes	Paper Drawer1: A4, B5, A5R, Custom size (139.7 x 182 mm to 297 x 215.9 mm), and Envelopes (Nagagata 3, Younagagata 3, and ISO-C5) Paper Drawer2: A3, B4, A4, A4R, B5, B5R, A5R, OFFICIO, E-OFFICIO, B-OFFICIO, M-OFFICIO, A-OFFICIO, FOLIO, A-LTR, A-LTRR, GLTR, GLTR-R, GLGL, ILGL, AFLS, FLS, Custom size (139.7 x 182 mm to 304.8 x 457.2 mm), and Envelopes (Nagagata 3, Younagagata 3, Kakugata 2, Monarch, COM10 No.10, and DL) Multi-Purpose Tray: A3, B4, A4, A4R, B5, B5R, A5, A5R, OFFICIO, E-OFFICIO, B-OFFICIO, M-OFFICIO, A-OFFICIO, FOLIO, A-LTR, A-LTRR, GLTR, GLTR-R, GLGL, ILGL, AFLS, FLS, Custom size (98.4 x 139.7 mm to 320 x 457.2 mm), and Envelopes

Item	Specifications
Warm-Up Time*	After Powering ON (when [Quick Startup Settings for Main Power] is set to 'Off'): 34 seconds or less After Powering ON (when [Quick Startup Settings for Main Power] is set to 'On'): 10 seconds or less The time until key operations can be performed on the touch panel display is 7 seconds or less. Even if [Quick Startup Settings for Main Power] is set to 'On', the machine does not startup quickly, depending on the situations. Returning from the Sleep mode: 10 seconds or less * Activation time may vary, depending on the environment and conditions under which the machine is being used. (At a room temperature of 20 °C in all above cases.)
First Copy Time	Full Color: 8.2 seconds Black-and-White: 5.9 seconds
Copy Speed*	1:1 imageRUNNER ADVANCE C3330: A3 15 sheets/minute B4 15 sheets/minute A4 30 sheets/minute B5 30 sheets/minute imageRUNNER ADVANCE C3325: A3 15 sheets/minute B4 15 sheets/minute A4 25 sheets/minute B5 25 sheets/minute imageRUNNER ADVANCE C3320: A3 15 sheets/minute B4 15 sheets/minute A4 20 sheets/minute B5 20 sheets/minute * Except when paper is fed from the multi-purpose tray. The copy speed may vary, depending on the settings for paper type, paper size, and the sending method. When continuously copying, adjustments for machine temperature or image quality may cause machine operations to pause or become slow.
Margin	Top: 4.0 mm Left and Right: 2.5 mm Bottom: 2.5 mm
Magnification	Regular paper size: Same Ratio 1:1 Reduction 1:0.86 (A3 → B4, A4 → B5), 1:0.81 (B4 → A4, B5 → A5), 1:0.70 (A3 → A4, B4 → B5), 1:0.61 (A3 → B5), 1:0.50 (A3 → A5), and 1:0.25 Enlargement 1:1.15 (B4 → A3, B5 → A4), 1:1.22 (A4 → B4, A5 → B5), 1:1.41 (A4 → A3, B5 → B4), 1:2.00 (A5 → A3), and 1:4.00 Copy Ratio: 25 to 400% (in 1% increment)

Item	Specifications
Paper Feeding System/Capacity	Paper Drawer: 550 sheets (80 g/m^2) or 640 sheets (64 g/m^2) Multi-Purpose Tray: 100 sheets (80 g/m^2)
Multiple Copies	999 sheets
Memory Capacity	2 GB (RAM)
Hard Disk Capacity*	250 GB or more (Used space: 215 GB) * The hard disk capacity is subject to change in future release.
Power Source	220 - 240 V AC, 50/60 Hz, 4.0 A
Power Consumption	Maximum Power Consumption: 1.5 kW or less When the machine is in the Sleep mode*: 0.8 W When the main power switch is turned OFF: When [Quick Startup Settings for Main Power] is set to 'On': 0.45 W When [Quick Startup Settings for Main Power] is set to 'Off': 0.1 W * Depending on the system and conditions of use, these values may differ.
Dimensions (H x W x D)	742 mm x 565 mm x 665 mm
Weight (Including the toner cartridges)	Approximately 66.1 kg
Installation Space (W x D)	894 mm x 1,088 mm (when the multi-purpose tray is extended)

DADF-AQ1

Item	Specifications
Original Feeding Mechanism	Automatic Document Feeder
Size and Weight of Originals	Size: A3, B4, A4, A4R, B5, B5R, A5, A5R, and B6 Weight: 1-Sided Scanning: 42 to 128 g/m^2 2-Sided Scanning: 50 to 128 g/m^2
Original Tray Capacity	100 sheets (80 g/m^2)
Original Scanning Speed	Copying: 1-sided scanning: 30 sheets/minute (A4 in Black-and-White/Full Color at 600 x 600 dpi) Scanning: 1-sided scanning: 55 sheets/minute (A4 in Black-and-White/Full Color at 300 x 300 dpi)
Power Source/Maximum Power Consumption	From the main unit/Approximately 36 W
Dimensions (H x W x D)	139 mm x 565 mm x 525 mm
Weight	Approximately 8.1 kg

Cassette Feeding Unit-AL1

Item	Specifications
Paper Sizes	A3, B4, A4, A4R, B5, B5R, A5R, OFFICIO, E-OFFICIO, B-OFFICIO, M-OFFICIO, A-OFFICIO, FOLIO, A-LTR, A-LTRR, GLTR, GLTR-R, GLGL, ILGL, AFLS, FLS, and Custom size (139.7 x 182 mm to 304.8 x 457.2 mm)
Paper Drawers Capacity	550 sheets (80 g/m^2)
Power Source/Maximum Power Consumption	From the main unit/Approximately 30 W
Dimensions (H x W x D)	248 mm x 565 mm x 615 mm
Weight	Approximately 16.1 kg

Inner Finisher-G1

Item	Specifications
Paper Size/Weight/Type	Size: 305 mm x 457 mm, 320 mm x 450 mm (SRA3), A3, B4, A4, A4R, B5, B5R, A5, A5R, OFFICIO, E-OFFICIO, B-OFFICIO, M-OFFICIO, A-OFFICIO, FOLIO, A-LTR, A-LTRR, GLTR, GLTR-R, GLGL, ILGL, AFLS, FLS, and Custom Size (98.4 x 139.7 mm to 320 x 457.2 mm) Weight: 52 to 256 g/m^2 Type: Thin (52 to 63 g/m^2), Plain 1 (64 to 75 g/m^2), Plain 2 (76 to 90 g/m^2), Plain 3 (91 to 105 g/m^2), Recycled 1 (64 to 75 g/m^2), Recycled 2 (76 to 90 g/m^2), Recycled 3 (91 to 105 g/m^2), Color, Pre-Punched, Bond, Heavy 1 (106 to 128 g/m^2), Heavy 2 (129 to 163 g/m^2), Heavy 3 (164 to 220 g/m^2), Heavy 4 (221 to 256 g/m^2), Tracing, Coated, Labels, Transparency, and Envelopes
Capacity Per Tray (Upper Tray)	No finishing set, Collate, and Group mode: A4, B5, A5, and A5R: 100 sheets (or 10.4 mm in height) 305 mm x 457 mm, 320 mm x 450 mm (SRA3), A3, B4, A4R, and B5R: 50 sheets (or 5.2 mm in height) With different paper sizes: 50 sheets (or 5.2 mm in height)
Capacity Per Tray (Lower Tray)	No finishing set, Collate, Group, Collate + Offset, and Group + Offset mode: A4 and B5: 500 sheets (or 52 mm in height) A3, B4, and A4R: 250 sheets (or 26 mm in height) Staple mode: A4 and B5: 30 sets (or 52 mm in height) A3, B4, and A4R: 30 sets (or 26 mm in height) With different paper sizes: 30 sets (or 26 mm in height) No finishing set, Collate, and Group mode: With different paper sizes: 250 sheets (or 26 mm in height)

Item	Specifications
Max. Stapling Capacity/ Available Staple Size	Corner: A4 and B5: 50 sheets (52 to 81.4 g/m^2) 30 sheets (81.5 to 105 g/m^2) 2 sheets (106 to 256 g/m^2) A3, B4, and A4R: 30 sheets (52 to 81.4 g/m^2) 20 sheets (81.5 to 105 g/m^2) 2 sheets (106 to 256 g/m^2) Staple-Free (Eco): A3, B4, A4, and B5: 5 sheets (52 to 64 g/m^2) 4 sheets (65 to 81.4 g/m^2) 3 sheets (81.5 to 105 g/m^2) Manual Staple: All sizes: 40 sheets (80 g/m^2)
Power Source/Maximum Power Consumption	From the main unit/Approximately 36 W
Dimensions (H x W x D)	188 mm x 604 mm x 525 mm (when the extension tray is extended)
Weight	Approximately 7.2 kg
Installation Space Including the Main Unit (W x D)	1,026 mm x 693 mm (when the DADF-AQ1 is attached and the multi-purpose tray is extended)

Staple Finisher-U1

Item	Specifications
Paper Size/Weight/Type	Size: 305 mm x 457 mm, 320 mm x 450 mm (SRA3), A3, B4, A4, A4R, B5, B5R, A5, A5R, OFFICIO, E-OFFICIO, B-OFFICIO, M-OFFICIO, A-OFFICIO, FOLIO, A-LTR, A-LTRR, GLTR, GLTR-R, GLGL, ILGL, AFLS, FLS, and Custom Size (98.4 x 139.7 mm to 320 x 457.2 mm) Weight: 52 to 256 g/m^2 Type: Thin (52 to 63 g/m^2), Plain 1 (64 to 75 g/m^2), Plain 2 (76 to 90 g/m^2), Plain 3 (91 to 105 g/m^2), Recycled 1 (64 to 75 g/m^2), Recycled 2 (76 to 90 g/m^2), Recycled 3 (91 to 105 g/m^2), Color, Pre-Punched, Bond, Heavy 1 (106 to 128 g/m^2), Heavy 2 (129 to 163 g/m^2), Heavy 3 (164 to 220 g/m^2), Heavy 4 (221 to 256 g/m^2), Tracing, Coated, Labels, Transparency, and Envelopes
Capacity Per Tray	No finishing set, Collate, and Group mode: A4, B5, A5, and A5R: 1,000 sheets (or 147 mm in height) 305 mm x 457 mm, 320 mm x 450 mm (SRA3), A3, B4, A4R, and B5R: 500 sheets (or 73.5 mm in height) With different paper sizes: 500 sheets (or 73.5 mm in height) Collate + Offset and Group + Offset mode: A4 and B5: 1,000 sheets (or 147 mm in height) A3, B4, and A4R: 500 sheets (or 73.5 mm in height) Staple mode: A4 and B5: 50 sets (or 147 mm in height) A3, B4, and A4R: 50 sets (or 73.5 mm in height) With different paper sizes: 50 sets (or 73.5 mm in height)
Max. Stapling capacity/ Available Staple Size	A4 and B5: 50 sheets (52 to 81.4 g/m^2) 30 sheets (81.5 to 105 g/m^2) 2 sheets (106 to 256 g/m^2) A3, B4, and A4R: 30 sheets (52 to 81.4 g/m^2) 20 sheets (81.5 to 105 g/m^2) 2 sheets (106 to 256 g/m^2)
Power Source/Maximum Power Consumption	From the Buffer Pass Unit/Approximately 106 W
Dimensions (H x W x D)	971 mm x 662 mm x 646 mm (when the extension tray is extended)
Weight	Approximately 40.5 kg
Installation Space Including the Main Unit (W x D)	1,561 mm x 693 mm (when the DADF-AQ1 is attached and the multi-purpose tray is extended)

Booklet Finisher-U1

Item	Specifications
Paper Size/Weight/Type	Size: 305 mm x 457 mm, 320 mm x 450 mm (SRA3), A3, B4, A4, A4R, B5, B5R, A5, A5R, OFFICIO, E-OFFICIO, B-OFFICIO, M-OFFICIO, A-OFFICIO, FOLIO, A-LTR, A-LTRR, GLTR, GLTR-R, GLGL, ILGL, AFLS, FLS, and Custom Size (98.4 x 139.7 mm to 320 x 457.2 mm) Weight: 52 to 256 g/m^2 Type: Thin (52 to 63 g/m^2), Plain 1 (64 to 75 g/m^2), Plain 2 (76 to 90 g/m^2), Plain 3 (91 to 105 g/m^2), Recycled 1 (64 to 75 g/m^2), Recycled 2 (76 to 90 g/m^2), Recycled 3 (91 to 105 g/m^2), Color, Pre-Punched, Bond, Heavy 1 (106 to 128 g/m^2), Heavy 2 (129 to 163 g/m^2), Heavy 3 (164 to 220 g/m^2), Heavy 4 (221 to 256 g/m^2), Tracing, Coated, Labels, Transparency, and Envelopes
Capacity Per Tray	No finishing set, Collate, and Group mode: A4, B5, A5, and A5R: 1,000 sheets (or 147 mm in height) 305 mm x 457 mm, 320 mm x 450 mm (SRA3), A3, B4, A4R, and B5R: 500 sheets (or 73.5 mm in height) With different paper sizes: 500 sheets (or 73.5 mm in height) Collate + Offset and Group + Offset mode: A4 and B5: 1,000 sheets (or 147 mm in height) A3, B4, and A4R: 500 sheets (or 73.5 mm in height) Staple mode: A4 and B5: 50 sets (or 147 mm in height) A3, B4, and A4R: 50 sets (or 73.5 mm in height) With different paper sizes: 50 sets (or 73.5 mm in height)
Max. Stapling capacity/ Available Staple Size	A4 and B5: 50 sheets (52 to 81.4 g/m^2) 30 sheets (81.5 to 105 g/m^2) 2 sheets (106 to 256 g/m^2) A3, B4, and A4R: 30 sheets (52 to 81.4 g/m^2) 20 sheets (81.5 to 105 g/m^2) 2 sheets (106 to 256 g/m^2)

Item	Specifications
Max. Saddle Stitch Capacity/ Available Saddle Stitch Size	Saddle Stitch: 16 sheets/10 sets (60 to 81.4 g/m^2) 10 sheets/15 sets (81.5 to 105 g/m^2) 5 sheets/10 sets (106 to 120 g/m^2) Saddle Folding: 1 sheet/25 sets (60 to 105 g/m^2) 1 sheet/10 sets (106 to 256 g/m^2) Size: 305 mm x 457 mm, A3, B4, and A4R
Power Source/Maximum Power Consumption	From the Buffer Pass Unit/Approximately 220 W
Dimensions (H x W x D)	971 mm x 771 mm x 657 mm (when the extension tray is extended)
Weight	Approximately 67.5 kg
Installation Space Including the Main Unit (W x D)	1,670 mm x 693 mm (when the DADF-AQ1 is attached and the multi-purpose tray is extended)

Inner 2way Tray-J1

Item	Specifications
Paper Size/Weight/Type	Size: 305 mm x 457 mm, 320 mm x 450 mm (SRA3), A3, B4, A4, A4R, B5, B5R, A5, A5R, OFFICIO, E-OFFICIO, B-OFFICIO, M-OFFICIO, A-OFFICIO, FOLIO, A-LTR, A-LTRR, GLTR, GLTR-R, GLGL, ILGL, AFLS, FLS, and Custom Size (98.4 x 139.7 mm to 320 x 457.2 mm) Weight: 52 to 256 g/m^2 Type: Thin (52 to 63 g/m^2), Plain 1 (64 to 75 g/m^2), Plain 2 (76 to 90 g/m^2), Plain 3 (91 to 105 g/m^2), Recycled 1 (64 to 75 g/m^2), Recycled 2 (76 to 90 g/m^2), Recycled 3 (91 to 105 g/m^2), Color, Pre-Punched, Bond, Heavy 1 (106 to 128 g/m^2), Heavy 2 (129 to 163 g/m^2), Heavy 3 (164 to 220 g/m^2), Heavy 4 (221 to 256 g/m^2), Tracing, Coated, Labels, Transparency, and Envelopes
Capacity Per Tray*	Tray A: 250 sheets Tray B: 100 sheets * When A4 size paper is used.
Dimensions (H x W x D)	76 mm x 427 mm x 407 mm
Weight	Approximately 574 g

Copy Tray-J2

Item	Specifications
Paper Size/Weight/Type	Size: A3, B4, A4, A4R, B5, B5R, A5R, OFFICIO, E-OFFICIO, B-OFFICIO, M-OFFICIO, A-OFFICIO, FOLIO, A-LTR, A-LTRR, GLTR, GLTR-R, GLGL, ILGL, AFLS, FLS, and Custom Size (139.7 x 182 mm to 297 x 431.8 mm) Weight: 52 to 220 g/m^2 Type: Thin (52 to 63 g/m^2), Plain 1 (64 to 75 g/m^2), Plain 2 (76 to 90 g/m^2), Plain 3 (91 to 105 g/m^2), Recycled 1 (64 to 75 g/m^2), Recycled 2 (76 to 90 g/m^2), Recycled 3 (91 to 105 g/m^2), Color, Pre-Punched, Bond, Heavy 1 (106 to 128 g/m^2), Heavy 2 (129 to 163 g/m^2), and Heavy 3 (164 to 220 g/m^2)
Capacity Per Tray*	100 sheets * When A4 size paper is used.
Dimensions (H x W x D)	176 mm x 444 mm x 373 mm (when the extension tray is extended)
Weight	Approximately 473 g
Installation Space Including the Main Unit (W x D)	1,009 mm x 693 mm (when the DADF-AQ1 is attached and the multi-purpose tray is extended)

Copy Card Reader-F1

Item	Specifications
Available Cards	Magnetic
Card Readout Method	Magnetic readout
Magnetic Card Reading Direction	Face up
Store/Replay	Replay
Power Source	From the main unit
Dimensions (H x W x D)	40 mm x 88 mm x 96 mm (excluding the attachment kit and cable)
Weight	Approximately 200 g (including the attachment kit and cable)

Super G3 FAX Board-AR1

NOTE

Specifications remain the same even when the Super G3 2nd Line Fax Board is installed.

Item	Specifications
Telephone Line Used*1	Public Switched Telephone Network
Scan Line Density (Scan Transmission)	Normal: 8 pels*2/mm x 3.85 line/mm Fine: 8 pels*2/mm x 7.7 line/mm Super-Fine: 8 pels*2/mm x 15.4 line/mm Ultra-Fine: 16 pels*2/mm x 15.4 line/mm
Transmission Speed	Super G3: 33.6 kbps G3: 14.4 kbps
Compression Method	MH, MR, MMR, and JBIG
Transmission Type	Super G3 and G3
Sending Original Sizes	A3, B4, A4, B5*3, and A5*4
Receiving Paper Sizes	A3, B4, A4, B5, and A5
Transmission Times	JBIG: Approximately 2.6 seconds
Auto Dial Function	Address Book: 1,800 destinations (including destinations stored in one-touch buttons)
Image Memory	Approximately 6,000 pages

*1 When using an IP telephone service, facsimile communication may not be performed normally via an IP telephone line. It is recommended to use facsimile communication via a general telephone (Public Switched Telephone Network) line.
*2 Pels stands for picture elements (pixels).
*3 Sent as B4.
*4 Sent as A4.

Send Function (Scan Features)

Item	Specifications
Communication Protocol	FTP (TCP/IP), SMB (TCP/IP), and WebDAV
Data Format	TIFF, JPEG, PDF, XPS, and OOXML (PowerPoint and Word)
Resolution	100 x 100 dpi, 150 x 150 dpi, 200 x 100 dpi, 200 x 200 dpi, 200 x 400 dpi, 300 x 300 dpi, 400 x 400 dpi, 600 x 600 dpi
System Environment	Windows Server 2003 R2 SP2, Windows Vista SP2, Windows Server 2008 SP2, Windows Server 2008 R2 SP2, Windows 7, Windows 8, Windows 8.1, Windows Server 2012, Windows Server 2012 R2, Solaris 10, Mac OS X 10.7.x/10.8.x/10.9.x, and Red Hat Linux 9
Interface	1000BASE-T, 100BASE-TX, and 10BASE-T
Color Mode	Automatic-Color Select (Full Color/Grayscale), Automatic-Color Select (Full Color/Black-and-White), Full Color, Grayscale, and Black-and-White
Original Type	Text, Text/Photo, and Photo
Other	Preview and Browse Windows (SMB) File Server
Optional PDF/XPS/OOXML Functions	PDF: Compact, Trace and Smooth, Encryption, OCR, Device Signature, User Signature, Optimization for Web*1, PDF/A-1b, and Reader Extensions XPS: Compact, OCR, Device Signature, and User Signature OOXML: OCR

*1 PDF files optimized for Web viewing.

Send Function (E-Mail and I-Fax Features)

Item	Specifications
Communication Protocol	SMTP and POP3
I-Fax Communication Mode	Simple and Full
Resolution	For Sending E-mail (Black-and-White/Color): 100 x 100 dpi, 150 x 150 dpi, 200 x 100 dpi, 200 x 200 dpi, 200 x 400 dpi, 300 x 300 dpi, 400 x 400 dpi, 600 x 600 dpi For Sending I-Fax (Black-and-White): 200 x 100 dpi, 200 x 200 dpi, 200 x 400 dpi*1, 300 x 300 dpi*1, 400 x 400 dpi*1, 600 x 600 dpi*1
Format	E-mail: TIFF, JPEG, PDF, XPS, and OOXML (PowerPoint and Word) I-Fax (Black-and-White): TIFF (MH, MR*1, and MMR*1)
Original Size	E-mail: A3, B4, A4, B5, and A5 I-Fax: A3, B4, A4, B5*2, and A5*3
Server Software	Microsoft Exchange 2003 SP2, Microsoft Exchange 2007 SP2, Microsoft Exchange 2010, Microsoft Exchange 2013, Sendmail 8.14.4, and Lotus Domino R7.0
Other	Searches a destination via the LDAP Server and Preview
Optional PDF/XPS/OOXML Functions (E-mail only)	PDF: Compact, Trace and Smooth, Encryption, OCR, Device Signature, User Signature, Optimization for Web*4, PDF/A-1b, and Reader Extensions XPS: Compact, OCR, Device Signature, and User Signature OOXML: OCR

*1 Available after setting RX conditions of the destination.
*2 Sent as B4.
*3 Sent as A4.
*4 PDF files optimized for Web viewing.

Network Environment (Hardware Specifications)

Item	Specifications
Network Interface	10Base-T/100Base-TX/1000Base-T (RJ-45)

Network Environment (Software Specifications)

Item	Specifications
Protocol Supported	TCP/IP: Frame type: Ethernet II Print applications: LPD/Raw/IPP/IPPS/FTP/WSD AppleTalk

Printer Settings (Software Specifications)

Item	Specifications
Operating Modes	Auto, PS, PCL, XPS, Imaging, and PDF
Resident Fonts	PCL: 93 Scalable fonts, 2 OCR fonts, and AndaleFont*1 (Japanese, Korean, Simplified Chinese, and Traditional Chinese) PS: 136 Scalable fonts When using the Direct Print (for PDF/XPS): Japanese Fonts: 2 Canon Heisei fonts*2 (Heisei Mincho W3/Heisei Kaku Gothic W5) European Fonts: 136 fonts*2 *1 The optional PCL International Font Set needs to be activated to use Andale® and WorldType® Collection, or Andale Mono WT. *2 These fonts are included for use with PDF files.
Printable Area	PCL5c and PCL6: Reduced to 4.2 mm from the top, bottom, left, and right edges of the paper. PostScript 3: Reduced to 4 mm from the top, bottom, left, and right edges of the paper. When printing in the Expand Print Region and Print mode, the upper margin becomes 4 mm, the lower margin becomes 2.5 mm, and the side margins both become 2.5 mm. The printable area is enlarged. When an original has data that extends all the way to the edges, even if you select [Expand Print Region and Print], the periphery of the data may be cut off when printing. In this case, specify the reduction ratio in the printer driver so that data is not cut off, and perform printing again.

4

Appendix

Installation Location and Handling 76
- Installation Precautions 76
- Handling Precautions 78

Important Safety Instructions 79
- Installation 79
- Power Supply 79
- Handling 80
- Maintenance and Inspections 81
- Consumables 82
- Other Warnings 82

Legal Notices 83
- Product Name 83
- EMC requirements of EC Directive 83
- Laser Safety 83
- Additional Information 83
- IPv6 Ready Logo 84
- WEEE Directive / Rule 84
- Information Security Standard (IEEE 2600) 85
- Copyright 85
- Disclaimers 85
- Legal Limitations on the Usage of Your Product and the Use of Images 85
- Super G3 85

Installation Location and Handling

This section describes precautions for installation location and handling. We recommend that you read this section prior to using this machine.

Installation Precautions

Avoid Installing the Machine in the Following Locations

Avoid locations subject to temperature and humidity extremes, whether low or high.
For example, avoid installing the machine near water faucets, hot water heaters, humidifiers, air conditioners, heaters, or stoves.

Avoid installing the machine in direct sunlight.
If this is unavoidable, use curtains to shade the machine. Be sure that the curtains do not block the machine's ventilation slots or louvers, or interfere with the electrical cord or power supply.

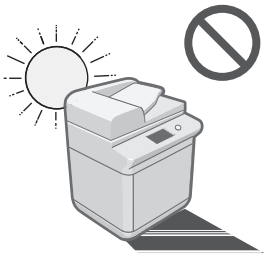

Avoid locations where a considerable amount of dust accumulates./Avoid locations where ammonia gas is emitted./Avoid locations near volatile or flammable materials, such as alcohol or paint thinner.

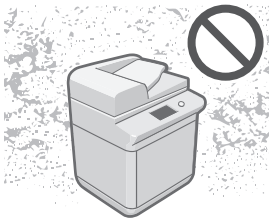

Avoid installing the machine near televisions, radios, or similar electronic equipment.
The machine might interfere with sound and picture signal reception.

Insert the power plug into a dedicated power outlet, and maintain as much space as possible between the machine and other electronic equipment.

Avoid poorly ventilated locations.
This machine generates a slight amount of ozone etc. during normal use. Although sensitivity to ozone etc. may vary, this amount is not harmful. Ozone etc. may be more noticeable during extended use or long production runs, especially in poorly ventilated rooms. It is recommended that the room be appropriately ventilated, sufficient to maintain a comfortable working environment, in areas of machine operation. In addition, do not install this machine where it exhausts directly onto a person.

Avoid installing the machine on a sheet with low heat-resistance.
The machine includes a paper drawer heater to maintain performance in high humidity environments. When placing the machine directly on a desk or other surface without attaching the optional Cassette Feeding Unit-AL1, avoid placing it on something such as a desk mat made from vinyl, or another material that has a low heat resistance. The bottom of the machine will get hot.

Avoid locations that are subject to vibration./ Avoid exposing the machine to rapid changes in temperature.
If the room in which the machine is installed is cold but rapidly heated, water droplets (condensation) may form inside the machine. This may result in a noticeable degradation in the quality of the copied image, the inability to properly scan an original, or the copies having no printed image at all.

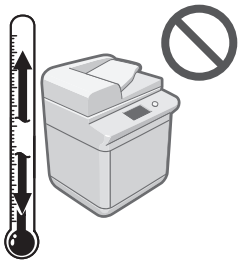

Avoid installing the machine near computers or other precision electronic equipment.
Electrical interference and vibrations generated by the machine while printing can adversely affect the operation of such equipment.

Avoid installing the machine at high altitudes of about 3,000 metres above sea level, or higher.

Machines with a hard disk may not operate properly when used at high altitudes of about 3,000 metres above sea level, or higher.

Connecting the Telephone Line

This machine conforms to a analog telephone line standard. The machine can be connected to the public switched telephone network (PSTN) only.

If you connect the machine to a digital telephone line or a dedicated telephone line, it might impede proper operation of the machine and could be the cause of damage. Make sure to confirm a type of telephone line before connecting the machine.

Contact your optical fiber line or IP telephone line service providers if you want to connect the machine to those telephone lines.

Contact an authorized Canon dealer if communication is unavailable.

Depending on your locale or your telephone connection, you may be unable to perform data communication. In this case, contact your local authorized Canon dealer.

Select a Safe Power Supply

- Plug the machine into a 220 - 240 V AC outlet.
- Make sure that the power supply for the machine is safe, and has a steady voltage.
- Do not connect other electrical equipment to the same power outlet to which the machine is connected.
- Do not connect the power cord to a multiplug power strip, as this may cause a fire or electrical shock.
- The power cord may become damaged if it is stepped on, affixed with staples, or if heavy objects are placed on it. Continued use of a damaged power cord can lead to an accident, such as a fire or electrical shock.
- The power cord should not be taut, as this may lead to a loose connection and cause overheating, which could result in a fire.
- If excessive stress is applied to the connection part of the power cord, it may damage the power cord or the wires inside the machine may disconnect. This could result in a fire. Avoid the following situations:
  - Connecting and disconnecting the power cord frequently.
  - Tripping over the power cord.
  - The power cord is bent near the connection part, and continuous stress is being applied to the power outlet or the connection part.
  - Applying excessive force on the power plug.

Moving the Machine

If you intend to move the machine, even to a location on the same floor of your building, contact your local authorized Canon dealer beforehand. Do not attempt to move the machine yourself.

Provide Adequate Installation Space

Provide enough space on each side of the machine for unrestricted operation.

When the DADF-AQ1 is attached:

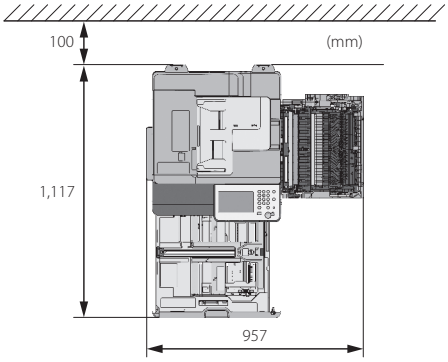

When the DADF-AQ1, Cassette Feeding Unit-AL1, and Booklet Finisher-U1 are attached:

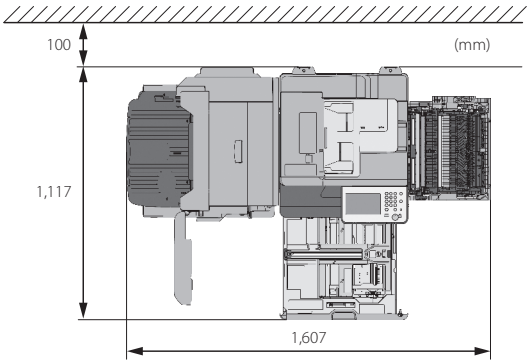

Handling Precautions

- Do not attempt to disassemble or modify the machine.
- Some parts inside the machine are subject to high-voltages and temperatures. Take adequate precautions when inspecting the inside of the machine. Do not carry out any inspections that are not described in the manuals for this machine.

- Be careful not to spill liquid or drop any foreign objects, such as paper clips or staples inside the machine. If a foreign object comes into contact with electrical parts inside the machine, it might cause a short circuit and result in a fire or electrical shock.

- If there is smoke, or unusual noise, immediately turn the main power switch OFF, disconnect the power cord from the power outlet, and then call your local authorized Canon dealer. Using the machine in this state may cause a fire or electrical shock. Also, avoid placing objects around the power plug so that the machine can be disconnected whenever necessary.
- Do not turn the main power switch OFF or open the covers while the machine is in operation. This may result in paper jams.
- Do not use flammable sprays, such as spray glue, near the machine. There is a danger of ignition.

- For safety reasons, press (Energy Saver) when it will not be used for a long period of time, such as overnight. As an added safety measure, turn OFF the main power switch, and disconnect the power cord when the machine will not be used for an extended period of time, such as during consecutive holidays.

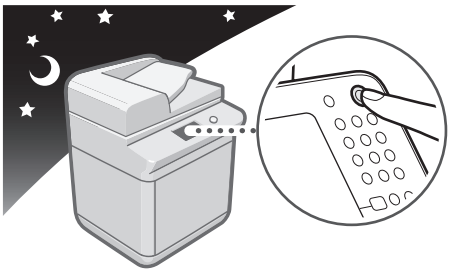

- Use a modular cable that is shorter than 3 meters.
- Use a USB cable that is shorter than 3 meters.

Important Safety Instructions

Please read these "Important Safety Instructions" thoroughly before operating the machine. As these instructions are intended to prevent injury to the user or other persons or destruction of property, always pay attention to these instructions. Also, since it may result in unexpected accidents or injuries, do not perform any operation unless otherwise specified in the manual. Improper operation or use of this machine could result in personal injury and/or damage requiring extensive repair that may not be covered under your Limited Warranty.

Installation

WARNING

- Never block the ventilation slots and louvers on the machine. These openings are provided for proper ventilation of working parts inside the machine. Blocking these openings can cause the machine to overheat. Never place the machine on a soft surface, such as a sofa or rug.
- Do not install the machine in the following locations:
  - A damp or dusty location
  - A location near water faucets or water
  - A location exposed to direct sunlight
  - A location subject to high temperatures
  - A location near open flames
- Do not install the machine near alcohol, paint thinner, or other flammable substances. If flammable substances come into contact with electrical parts inside the machine, it may result in a fire or electrical shock.
- Do not place the following items on the machine. If these items come into contact with a high-voltage area inside the machine, it may result in a fire or electrical shock.
  If these items are dropped or spilled inside the machine, immediately turn OFF the main power switch, and disconnect the power cord from the power outlet. Then, contact your local authorized Canon dealer.
  - Necklaces and other metal objects
  - Cups, vases, flowerpots, and other containers filled with water or liquids

CAUTION

- Do not install the machine in unstable locations, such as unsteady platforms or inclined floors, or in locations subject to excessive vibrations, as this may cause the machine to fall or tip over, resulting in personal injury.
- Do not remove the machine's leveling feet after the machine has been installed, as this may cause the machine to fall or tip over, resulting in personal injury.

Power Supply

WARNING

- Do not damage or modify the power cord. Also, do not place heavy objects on the power cord, or pull on or excessively bend it, as this could cause electrical damage and result in a fire or electrical shock.
- Keep the power cord away from a heat source; failure to do this may cause the power cord coating to melt, resulting in a fire or electrical shock.
- Do not connect or disconnect the power cord with wet hands, as this may result in electrical shock.
- Do not connect the power cord to a multiplug power strip, as this may cause a fire or electrical shock.
- Do not bundle up or tie the power cord in a knot, as this may result in a fire or electrical shock.
- Insert the power plug completely into the power outlet, as failure to do so may result in a fire or electrical shock.
- Do not use power cords other than the power cord provided, as this may result in a fire or electrical shock.
- The provided power cord is intended for use with this machine. Do not connect the power cord to other devices.
- As a general rule, do not use extension cords. Using an extension cord may result in a fire or electrical shock.
- Do not use power supplies with voltages other than those specified herein, as this may result in a fire or electrical shock.
- Always grasp the power plug when disconnecting the power cord. Pulling on the power cord may expose or snap the core wire, or otherwise damage the power cord. If the power cord is damaged, this could cause current to leak, resulting in a fire or electrical shock.

IMPORTANT

Install this machine near the power outlet and leave sufficient space around the power plug so that it can be unplugged easily in an emergency.

Handling

WARNING

- Do not attempt to disassemble or modify the machine. There are high-temperature and high-voltage components inside the machine which may result in a fire or electrical shock.
- If the machine makes strange noises, or gives off smoke, heat, or strange smells, immediately turn OFF the main power switch, and disconnect the power cord from the power outlet. Then, contact your local authorized Canon dealer. Continued use of the machine in this condition may result in a fire or electrical shock.
- Do not use highly flammable sprays near the machine. If gas from these sprays comes into contact with the electrical components inside the machine, it may result in a fire or electrical shock.
- To avoid damage to the power cord and creating a fire hazard, always turn OFF the main power switch, and unplug the interface cable when moving the machine. Otherwise, the power cord or interface cable may be damaged, resulting in a fire or electrical shock.
- Make sure that the power plug is firmly inserted into the power outlet if the machine was moved. Do not use the machine while the connection is loose, as doing so may cause a fire.
- Do not drop paper clips, staples, or other metal objects inside the machine. Also, do not spill water, liquids, or flammable substances (alcohol, benzene, paint thinner, etc.) inside the machine. If these items come into contact with a high-voltage area inside the machine, it may result in a fire or electrical shock. If these items are dropped or spilled inside the machine, immediately turn OFF the main power switch, and disconnect the power cord from the power outlet. Then, contact your local authorized Canon dealer.
- Do not use this product for uses other than as a color digital multitasking machine.

CAUTION

- Do not place heavy objects on the machine, as they may tip over or fall resulting in personal injury.
- Close the feeder gently to avoid catching your hands, as this may result in personal injury.
- Close the feeder gently to avoid catching your hands in the back of the feeder, as this may result in personal injury.

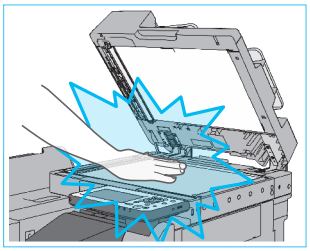

- Do not press down hard on the feeder when using the platen glass to make copies of thick books. Doing so may damage the platen glass and result in personal injury.
- Do not touch the finisher while the machine is printing, as this may result in personal injury.
- Paper that has just been output from the machine may be hot. Be careful when removing or aligning paper from the output tray. Touching paper right after it is output may result in low-temperature burns.
- Do not place your hands, hair, clothing, etc., near the exit and feed rollers. Even if the machine is not in operation, your hands, hair, or clothing may get caught in the rollers, which may result in personal injury or damage if the machine suddenly starts printing.
- Do not place your hands in the part of the tray where stapling is performed (near the rollers) when a finisher is attached, and be especially careful of staples, as this may result in personal injury.

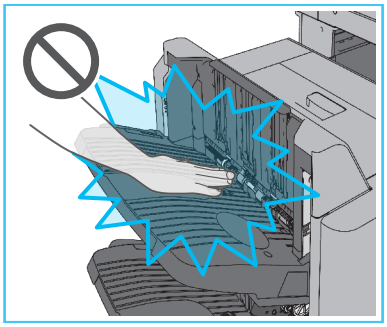

Booklet Finisher-U1

- Do not insert your hand into the machine while the paper drawer is removed, as this may result in personal injury.

- The laser beam can be harmful to human bodies. Since radiation emitted inside the product is completely confined within protective housings and external covers, the laser beam cannot escape from the machine during any phase of user operation. Read the following remarks and instructions for safety.
  - Never open covers other than those instructed in the manuals for this machine.
  - Do not remove the following caution label which is attached to the machine. If the label has been removed, contact your local authorized Canon dealer.

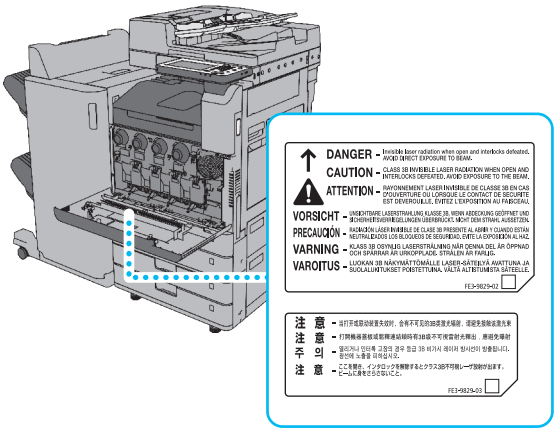

  - If the laser beam escapes from the machine, exposure may cause serious damage to your eyes.
  - Controlling, adjusting, or operating the machine in ways not mentioned in the manuals for this machine may cause dangerous radiation to escape from the machine.

IMPORTANT

Press (Energy Saver) for safety when the machine will not be used for a long period of time, such as overnight. Also, turn OFF the main power switch, and disconnect the power cord for safety when the machine will not be used for an extended period of time, such as during consecutive holidays.

Maintenance and Inspections

WARNING

- When cleaning the machine, first turn OFF the main power switch, then disconnect the power cord. Failure to observe these steps may result in a fire or electrical shock.
- Unplug the power plug periodically and clean with a dry cloth to remove dust and grime. Accumulated dust may absorb humidity in the air and may result in a fire if it comes into contact with electricity.
- Clean the machine using a slightly dampened cloth with a mild detergent mixed with water. Do not use alcohol, benzene, paint thinner, or other flammable substances. Check detergent for flammability prior to use. If flammable substances come into contact with a high-voltage area inside the machine, it may result in a fire or electrical shock.
- There are some areas inside the machine which are subject to high-voltages. When removing jammed paper or when inspecting the inside of the machine, do not allow necklaces, bracelets, or other metal objects to touch the inside of the machine, as this may result in burns or electrical shock.
- Do not burn or throw used toner cartridges into open flames, as this may cause the toner remaining inside the cartridges to ignite, resulting in burns or a fire.
- Make sure that the power plug is firmly inserted into the power outlet after cleaning the machine. Do not use the machine while the connection is loose, as doing so may cause a fire.
- Check the power cord and power plug regularly. If the following conditions occur, contact your local authorized Canon dealer, as the condition may cause a fire:
  - There are burn marks on the power plug.
  - The blade on the power plug is deformed or broken.
  - The power goes OFF and ON when the power cord is bent.
  - There are cuts, cracks, or indentations on the power cord.
  - A part of the power cord becomes hot.
- Check the power cord and power plug regularly to make sure that they are not handled in the following manner, as this may result in a fire or electrical shock:
  - The connection part of the power plug is loose.
  - Stress is being applied to the power cord by a heavy object or by affixing it with staples.
  - The power plug is loose.
  - The power cord is tied in a bundle.
  - The power cord protrudes into a walkway.
  - The power cord is in front of a heater.

CAUTION

- The fixing unit and its surroundings inside the machine may become hot during use. When removing jammed paper or when inspecting the inside of the machine, do not touch the fixing unit and its surroundings, as doing so may result in burns or electrical shock.
- When removing jammed paper or when inspecting the inside of the machine, do not expose yourself to the heat emitted from the fixing unit and its surroundings for a prolonged period of time. Doing so may result in low temperature burns, even though you did not touch the fixing unit and its surroundings directly.
- There are high-temperature and high-voltage components inside the machine. Touching them may result in personal injury or burns. Do not touch the internal parts of the machine which are not instructed to in the manuals for the machine.

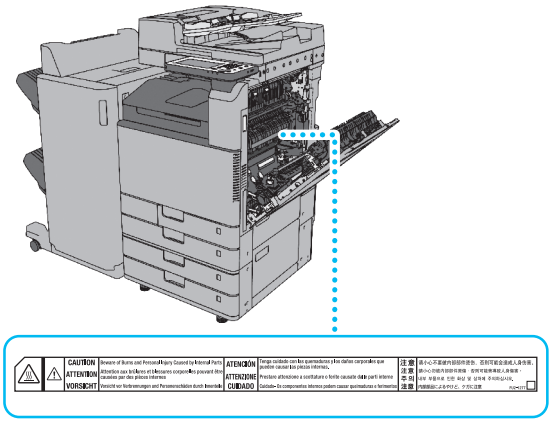

Consumables

WARNING

- Do not burn or throw used toner cartridges into open flames, as this may cause the toner remaining inside the cartridges to ignite, resulting in burns or a fire.
- Do not store toner cartridges or copy paper in places exposed to open flames, as this may cause the toner or paper to ignite, resulting in burns or a fire.
- If you accidentally spill or scatter toner, carefully wipe up the loose toner with a damp, soft cloth and avoid inhaling any toner dust. Do not use a vacuum cleaner that is not equipped with safety measures to prevent dust explosions to clean up loose toner. Doing so may cause damage to the vacuum cleaner or result in a dust explosion due to static discharge.
- For cardiac pacemaker users:
  This drum unit emits low level magnetic flux. If you use a cardiac pacemaker and feel abnormalities, please move away from the drum unit, and consult a physician.

CAUTION

- Keep toner and other consumables out of the reach of small children. If these items are ingested, consult a physician immediately.
- Do not dismantle the toner cartridge, as doing so may cause toner to fly out and enter your eyes or mouth. If toner gets into your eyes or mouth, wash them immediately with cold water and immediately consult a physician.
- If toner escapes from the toner cartridge, make sure not to ingest the toner or allow it to directly touch your skin. If toner touches your skin, wash it away with soap and water. If your skin still feels irritated after washing it, or you ingest toner, consult a doctor immediately.
- Do not touch the electrical contacts.

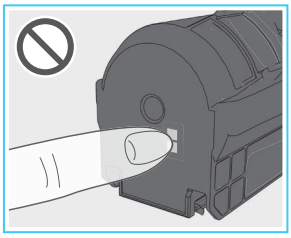

Other Warnings

WARNING

For cardiac pacemaker users:
This product emits low level magnetic flux. If you use a cardiac pacemaker and feel abnormalities, please move away from the product and consult your doctor.

Legal Notices

Product Name

Safety regulations require the product's name to be registered. In some regions where this product is sold, the following name(s) in parenthesis may be registered instead.

- imageRUNNER ADVANCE C3330/C3325/C3320 (F167600)

EMC requirements of EC Directive

This equipment conforms with the essential EMC requirements of EC Directive. We declare that this product conforms with the EMC requirements of EC Directive at nominal mains input 230 V, 50 Hz although the rated input of the product is 220 to 240 V, 50/60 Hz. Use of shielded cable is necessary to comply with the technical EMC requirements of EC Directive.

Laser Safety

This Product is certified as a Class 1 laser product under IEC60825-1:2007 and EN60825-1:2007. This means that the product does not produce hazardous laser radiation.

Since radiation emitted inside the product is completely confined within protective housings and external covers, the laser beam cannot escape from the machine during any phase of user operation.

Do not remove protective housings or external covers, except as directed by the equipment's manual.

Additional Information

When servicing or adjusting the optical system of the product, be careful not to place screwdrivers or other shiny objects in the path of the laser beam. Also, accessories such as watches and rings should be removed before working on the product.

The reflected beam, even though visible or invisible, can permanently damage your eyes.

The label shown below is attached to the inside of the front cover.

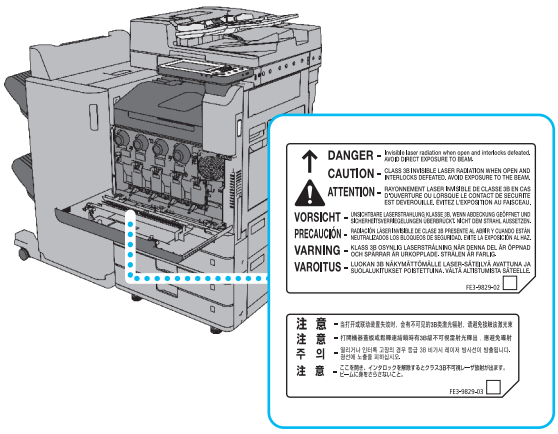

This Product has been classified under IEC60825-1:2007 and EN60825-1:2007, which conform to the following classes;

CLASS 1 LASER PRODUCT

LASER KLASSE 1

APPAREIL Á LASER DE CLASSE 1

APPARECCHIO LASER DI CLASSE 1

PRODUCTO LÁSER DE CLASE 1

APARELHO A LASER DE CLASSE 1

LUOKAN 1 LASER-TUOTE

LASERPRODUKT KLASS 1

CAUTION

Use of controls, adjustments, or performance of procedures other than those specified in the manuals for this machine may result in hazardous radiation exposure.

IPv6 Ready Logo

The protocol stack included in this machine has obtained the IPv6 Ready Logo Phase-2 established by the IPv6 Forum.

WEEE Directive / Rule

-European Union (and EEA) only-

This symbol attached on the product is according to the WEEE Directive (2002/96/EC).

-India only-

This product is not to be disposed of with your household waste, according to the e-waste (Management and Handling) Rules, 2011. This product should be handed over to a designated collection point, e.g., to an authorized collection site for recycling waste electrical and electronic equipment (EEE). Improper handling of this type of waste could have a possible negative impact on the environment and human health due to potentially hazardous substances that are generally associated with EEE. At the same time, your cooperation in the correct disposal of this product will contribute to the effective usage of natural resources. For more information regarding return and recycling of WEEE products, please visit <http://www.canon.co.in/environment>.

Also, this product complies with the "India E-waste Rule 2011" and prohibits use of lead, mercury, hexavalent chromium, polybrominated biphenyls or polybrominated diphenyl ethers in concentrations exceeding 0.1 % by weight and 0.01 % by weight for Cadmium, except for the exemptions set in Schedule II of the Rule.

Information Security Standard (IEEE 2600)

This machine is compliant with IEEE Std 2600™ - 2008 (hereinafter referred to as IEEE 2600), a global information security standard for multifunction peripherals and printers, and is able to achieve the security requirements defined in IEEE 2600.*

For information on how this machine meets the security requirements defined in IEEE 2600, see e-Manual > Security > IEEE 2600 Security Standard.

* IEEE 2600.1 CC Authentication has not been obtained for this machine by itself.

Copyright

Copyright 2016 by Canon Inc. All rights reserved.

No part of this publication may be reproduced or transmitted in any form or by any means, electronic or mechanical, including photocopying and recording, or by any information storage or retrieval system without the prior written permission of Canon Inc.

This product includes software and/or software modules that are licensed by Canon Inc. or its licensors from third parties. Use and distribution of this software and/or software modules are subject to conditions (a) through (c) below.

(a)
UFST: Copyright © 1989 - 1996, 1997, 2003, 2004, 2008, all rights reserved, by Monotype Imaging Inc.

(b)
Copyright © Unpublished Work of Novell, Inc.
All Rights Reserved.

(c)
Portions of this software are copyright © 2007
The FreeType Project (www.freetype.org).
All rights reserved.

Disclaimers

The information in this document is subject to change without notice.

CANON INC. MAKES NO WARRANTY OF ANY KIND WITH REGARD TO THIS MATERIAL, EITHER EXPRESS OR IMPLIED, EXCEPT AS PROVIDED HEREIN, INCLUDING WITHOUT LIMITATION, THEREOF, WARRANTIES AS TO MARKETABILITY, MERCHANTABILITY, FITNESS FOR A PARTICULAR PURPOSE OF USE OR NON-INFRINGEMENT. CANON INC. SHALL NOT BE LIABLE FOR ANY DIRECT, INCIDENTAL, OR CONSEQUENTIAL DAMAGES OF ANY NATURE, OR LOSSES OR EXPENSES RESULTING FROM THE USE OF THIS MATERIAL.

Legal Limitations on the Usage of Your Product and the Use of Images

Using your product to scan, print or otherwise reproduce certain documents, and the use of such images as scanned, printed or otherwise reproduced by your product, may be prohibited by law and may result in criminal and/or civil liability. A non-exhaustive list of these documents is set forth below. This list is intended to be a guide only. If you are uncertain about the legality of using your product to scan, print or otherwise reproduce any particular document, and/or of the use of the images scanned, printed or otherwise reproduced, you should consult in advance with your legal advisor for guidance.

- Paper Money
- Travelers Checks
- Money Orders
- Food Stamps
- Certificates of Deposit
- Passports
- Postage Stamps (canceled or uncanceled)
- Immigration Papers
- Identifying Badges or Insignias
- Internal Revenue Stamps (canceled or uncanceled)
- Selective Service or Draft Papers
- Bonds or Other Certificates of Indebtedness
- Checks or Drafts Issued by Governmental Agencies
- Stock Certificates
- Motor Vehicle Licenses and Certificates of Title
- Copyrighted Works/Works of Art without Permission of Copyright Owner

Super G3

Super G3 is a phrase used to describe the new generation of fax machines that use ITU-T V.34 standard 33.6 Kbps* modems. Super G3 High Speed Fax machines allow transmission times of approximately 3 seconds* per page which results in reduced telephone line charges.

* Approximately 3 seconds per page fax transmission time based on CCITT/ITU-T No.1 Chart, (JBIG, Standard Mode) at 33.6 Kbps modem speed. The Public Switched Telephone Network (PSTN) currently supports 28.8 Kbps modem speeds or slower, depending on telephone line conditions.

NOTE

The fax function is available only if the FAX Board is installed.

Canon

CANON INC.
30-2, Shimomaruko 3-chome, Ohta-ku, Tokyo 146-8501, Japan

CANON U.S.A., INC.
One Canon Park, Melville, NY 11747, U.S.A.

CANON CANADA INC.
6390 Dixie Road Mississauga, Ontario L5T 1P7, Canada

CANON EUROPA N.V.
Bovenkerkerweg 59, 1185 XB Amstelveen, The Netherlands
(See http://www.canon-europe.com/ for details on your regional dealer)

CANON AUSTRALIA PTY. LTD
Building A, The Park Estate, 5 Talavera Road, Macquarie Park, NSW 2113, Australia

CANON CHINA CO., LTD
2F Jinbao Building No.89 Jinbao Street, Dongcheng District, Beijing 100005, China

CANON SINGAPORE PTE. LTD.
1 Fusionopolis Place, #15-10, Galaxis, Singapore 138522

CANON HONGKONG CO., LTD
19/F., The Metropolis Tower, 10 Metropolis Drive, Hunghom, Kowloon, Hong Kong

FT6-1007 (010) XXXXXXXXXX Copyright CANON INC. 2016 PRINTED IN THAILAND