Canon

PUB. MIE-0014-000D

DP-V1710
DP-V1711

Video Display

- Before use, be sure to read this guide, including the safety and handling precautions.
- Reading this guide will help you learn to use the video display properly.
- Store this guide safely so that you can use it in the future.

Instruction Manual

English

Table of Content

Introduction 3
About this manual 3
Trademarks 3
Supplied Accessories 3

Important Usage Instructions 4

Safety Instructions and Handling Precautions 6

Features 11

Nomenclature 12

Installation/Connection 15
Carrying the video display 15
Removing the carrying handle 15
Attaching the protective plate: PP-17U Protect Panel (sold separately) 16
Removing/attaching the stand 17
Preventing from Tipping 18
Mounting the Main Unit on a Stand or Wall 19
Mounting the Main Unit on a 19 Inch Rack: RB-02 Rack Mount Bracket (sold separately) 20
Connecting the Main Unit to Input Devices 22

Turning on the Power 24
Turning on the Power of the Main Unit 24
Attaching/detaching the HC-01 AC Power Cord Clamp (provided) 25

Operating the Video Display 26
Basic operations to use the OSD menu 26
Adjusting Image Quality While Viewing the Entire Image 27
Temporarily Saving Parameters (Anchor Point Setting) 29
Enlarging the display (Zoom function) 29
Changing Image Quality Automatically According to Input Signal 30
Adjust image quality on left/right side of screen (image comparison mode) 31
Changing the screen display area 31
Performing calibrations 32
Export/Import 33
Set Date/Time 36
Inputting Characters 36
Using the Function (F) Buttons 37
Using the Channel (CH) Button 38
Checking Signal Information and Status of the Main Unit 41
Operating the video display using an external device [REMOTE terminal (GPI)] 41
Operating the video display using an external device [LAN terminal] 42
Operating the video display using an external device [USB terminal: Wi-Fi connection] 43
Use a web browser to remotely operate the video display 45

OSD Menu 48
OSD Menu Index 48
Adjustment 53
Channel Settings 69
Display Settings 74
Audio Settings 78
Marker Settings 79
Function Settings 84
Picture Function Settings 97
Network/IMD Settings 101
System Settings 103
Signal Information 110
System Information 110

Main specifications/Performance 111
Dimensions 113

Appendix 115
Supported Signal Format 115
Image/Frame Display 130

Error Messages 133
Troubleshooting 136
Software Used in This Product 139
Index 144

Introduction

Thank you for purchasing the Video Display DP-V1710 / DP-V1711.
The On Screen Display (thereafter referred to OSD) default language setting is English. To change the OSD menu language setting, please refer to p. 103.

About this manual

The illustrations used in this document are for the DP-V1710. Some of the illustrations used in the manual have been simplified for clarity.

Conventions used in this manual

📖: Indicates a reference page.
Reference: Indicates reference information.
ⓘ Note: Indicates a note.
CAUTION: Indicates an item you must observe.
MENU ➤ [Adjustment] ➤ [Picture Mode]: Pressing the MENU button shows the OSD Menu levels. You can move between the items and select from them.
OPTION: Indicates a function which requires a license to be enabled.

Trademarks

- HDMI, HDMI logo, and High-Definition Multimedia Interface are trademarks or registered trademarks of HDMI Licensing Administrator, Inc. in the U.S. and other countries.
- VESA is a registered trademark or trademark of Video Electronics Standards Association in the U.S. and other countries.
- Wi-Fi, WPA, and WPA2 are registered trademarks of the Wi-Fi Alliance.
- Apple and Safari are trademarks of Apple Inc. registered in the United States and other countries.
- Google and Google Chrome are trademarks or registered trademarks of Google LLC.
- Other product and company names herein are trademarks or registered trademarks of their respective owners.

Supplied Accessories

The following items are supplied with this product. Please check before using.

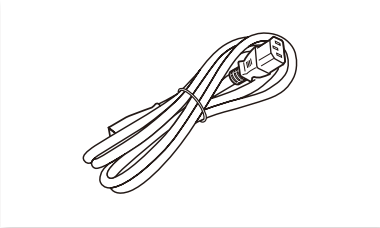

AC Power Cord HT-21

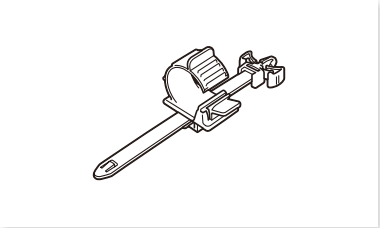

AC Power Cord clamp
HC-01

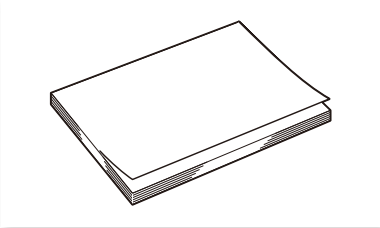

Instruction Manual
(this document)

Important Usage Instructions

Warning;
This is a class A product. In a domestic environment this product may cause radio interference in which case the user may be required to take adequate measures.

For the customers in the U.S.A.
This equipment has been tested and found to comply with the limits for a Class A digital device, pursuant to Part 15 of the FCC Rules.
These limits are designed to provide reasonable protection against harmful interference when the equipment is operated in a commercial environment. This equipment generates, uses, and can radiate radio frequency energy and, if not installed and used in accordance with the instruction manual, may cause harmful interference to radio communications. Operation of this equipment in a residential area is likely to cause harmful interference in which case the user will be required to correct the interference at his own expense.

Do not make any changes or modifications to the equipment unless otherwise specified in the manual. If such changes or modifications should be made, you could be required to stop operation of the equipment.
Use of shielded cable is required to comply with class A limits in Subpart B of Part 15 of FCC Rules.

This device complies with Part 15 of the FCC Rules. Operation is subject to the following two conditions: (1) This device may not cause harmful interference, and (2) this device must accept any interference received, including interference that may cause undesired operation.

Canon U.S.A Inc.
One Canon Park, Melville, NY 11747, U.S.A.
Tel No. (631)330-5000

For the customers in Canada
CAN ICES-3 (A) / NMB-3 (A)

For the customers in Europe
CANON INC.
30-2, Shimomaruko 3-chome, Ohta-ku, Tokyo 146-8501, Japan

CANON EUROPA N.V.
Bovenkerkerweg 59, 1185 XB Amstelveen, The Netherlands

Only for European Union and EEA (Norway, Iceland and Liechtenstein)
This symbol indicates that this product is not to be disposed of with your household waste, according to the WEEE Directive (2012/19/EU) and national legislation. This product should be handed over to a designated collection point, e.g., on an authorized one-for-one basis when you buy a new similar product or to an authorized collection site for recycling waste electrical and electronic equipment (EEE). Improper handling of this type of waste could have a possible negative impact on the environment and human health due to potentially hazardous substances that are generally associated with EEE. At the same time, your cooperation in the correct disposal of this product will contribute to the effective usage of natural resources. For more information about where you can drop off your waste equipment for recycling, please contact your local city office, waste authority, approved WEEE scheme or your household waste disposal service. For more information regarding return and recycling of WEEE products, please visit www.canon-europe.com/sustainability/approach/.

Only for the United Kingdom
This symbol indicates that this product is not to be disposed of with your household waste, according to the UK Waste Electrical and Electronic Equipment Regulations. This product should be handed over to a designated collection point, e.g., on an authorized one-for-one basis when you buy a new similar product or to an authorized collection site for recycling waste electrical and electronic equipment (EEE). Improper handling of this type of waste could have a possible negative impact on the environment and human health due to potentially hazardous substances that are generally associated with EEE. At the same time, your cooperation in the correct disposal of this product will contribute to the effective usage of natural resources. For more information about where you can drop off your waste equipment for recycling, please contact your local city office, waste authority, approved WEEE scheme or your household waste disposal service. For more information regarding return and recycling of WEEE products, please visit www.canon-europe.com/sustainability/approach/.

Per l'Italia, Etichettatura ambientale: per il corretto riciclo degli imballaggi dei nostri prodotti e articoli, visita il sito https://www.canon-europe.com/sustainability/approach/packaging

Safety Instructions and Handling Precautions

Be sure to read these instructions in order to operate the product safely.
Follow these instructions to prevent injury or harm to the operator of the product or others.

⚠ WARNING

Denotes the risk of serious injury or death.

- **Do not disassemble or modify the video display.**
  Inside, the video display contains high-voltage/extremely hot/movable parts that can cause fire, electric shock, burns or injury.
- **Do not insert foreign objects or liquids into the video display.**
  If metallic objects, flammable objects or liquids get inside the video display, this may cause fire, electric shock or malfunction.
- **Be sure to use the correct voltage.**
  Using a power source with a voltage other than that specified in this instruction manual can cause fire or electric shock. Always use the supplied (or specified) AC power cord. For your safety, do not use this AC power cord to power other equipment.
- **Do not connect non-standard input voltage to the DC input terminal.**
  Applying non-standard input voltage to the DC input terminal can cause a fire or electric shock.
- **Do not use the video display in the following places.**
  Doing so can cause fire, electric shock or malfunction.
  - Close to a window when it is raining or snowing.
  - Places subject to high humidity and dust.
  - Places exposed to water and moisture such as bathrooms, kitchens etc.
  - Places directly exposed to dust, smoke or steam, or nearby heaters and humidifiers.
  - Places where flammable gases may be present.
  - Places exposed to direct sunlight.
- **Do not install or store the video display in places exposed to direct sunlight.**
  The video display's internal temperature can rise and cause fire or malfunction.
- **Do not damage the power cord.**
  Do not place heavy objects on the power cord and do not pull, modify, heat or tie the power cord in a bundle. The power cord may be damaged (exposed or broken wires, etc.) and cause fire or electric shock.
- **When using three-pronged plugs with a ground connection:**
  Always connect the ground prong.
  A short circuit occurring when the ground prong is not connected can cause fire or electric shock.
  The video display's power cable features a three-pronged plug.
- **Do not touch the power cable or plug during lightning storms.**
  This can cause electric shock.
- **Do not touch the power cable or plug with wet hands.**
  This can cause electric shock.

- **Observe the following precautions regarding the power source and power plug.**
  Failing to do so can cause fire or electric shock.
  - Insert the power plug fully and securely into the power outlet. Do not use a damaged power cable or plug or a loose power outlet.
  - Hold the plug itself when unplugging the power cable. Pulling the power cord can damage the power cord and cause fire or electric shock.
  - Periodically remove any dust buildup from the power plug.
  - Do not obstruct the access to the power plug by placing other objects around it.
  - Do not connect many power cords to the same power outlet.
  - When using an extension cable, make sure the total power consumption of the devices you connect to the extension cable does not exceed its rated power.
- **If the video display was dropped or exposed to a strong impact, turn it off immediately and unplug the power plug.**
  The video display is a precision instrument and continued use in such case can result in a short circuit and cause fire or electric shock.
- **Before starting any maintenance work, turn off the video display and unplug the power plug.**
  Failing to do so can cause electric shock.
- **In any case of unusual circumstances such as the presence of smoke or abnormal sounds or smell, immediately turn off the video display and unplug the power plug.**
  Continued use can cause fire or electric shock.
- **Before moving, installing, removing or connecting the video display to peripheral devices, turn off the video display and all connected devices and unplug their power plugs.**
  Failing to do so can cause fire, electric shock or malfunction.
- **For your safety, unplug the power plug from the power outlet when not using the video display for extended periods of time.**
  Dust buildup on the power plug can cause fire.
- **Do not obstruct the access to the power plug so it can always be easily unplugged.**
  Failing to disconnect the power plug immediately after unusual circumstances have occurred can cause fire or electric shock.
- **Do not block the ventilation holes.**
  Blocking the video display's vent holes can result in the internal temperature rising and cause fire or malfunction. Observe the following precautions to ensure proper ventilation.
  - Do not push the video display into narrow confined spaces or enclosures.
  - Do not wrap the video display in cloth or other materials.
  - Do not place the video display facing up, lay it sideways or upside-down.
- **If the screen is damaged, do not touch the leaking liquid crystal or other internal liquids.**
  If the LCD panel is damaged and liquid crystal or other internal liquids leak out, do not put the liquids in the mouth, inhale or swallow it or let it come in contact with the skin. If the liquids get in the eye or mouth, wash it immediately with plenty of water. If the liquids come in contact with the skin or clothes, wipe them immediately with alcohol etc. and wash the exposed area with soap. Leaving the liquids untreated can cause injury or damage.
- **Use the carrying handle to carry the video display.**
  When carrying the video display, be sure to hold it by the carrying handle. Failure to do so could cause the display to fall and cause an injury.
- **Keep all packaging material out of the reach of children.**
  Packaging material tightly wrapped around someone's head can result in strangulation or suffocation.

⚠ CAUTION

Denotes the risk of injury.

- **Do not place any objects on the video display and do not climb on it.**
  The video display can tip or fall and cause injury.
- **Do not install the video display on an unstable surface.**
  Installing the video display on a wobbly or slanted surface can cause the display to tip or fall and cause injury. Thoroughly check also the strength and sturdiness of the surface where the video display will be placed or installed.
- **Take precautions to prevent the video display from tipping or falling.**
  In an earthquake the video display can tip or fall. For your safety, when installing the video display on a TV stand or other furniture, take precautionary measures to secure the video display against tipping or falling (📖18). Taking such measures can be effective in reducing the risk of injury or damage but the effectiveness of the prevention measures cannot be guaranteed in all earthquakes.
- **Always follow the specified procedure to install the video display (📖15).**
  If the installation is not performed correctly, the video display may tilt or fall and cause injury.
- **Inspect the condition of the installation about once per year.**
  An inadequate fitting or mounting can cause the video display to fall and cause injury.
- **Regularly check to ensure that the carrying handle remains securely attached.**
  If the carrying handle screws are loose or broken, the display could fall and cause an injury.
- **Attach the carrying handle securely.**
  The carrying handle screws should be tightened securely, if they have ever been removed. Failure to do so could cause the display to fall and cause an injury.
- **When using headphones, set the volume at a safe level.**
  Listening through headphones at a high volume can harm your hearing.
- **Do not look at the screen for long periods of time.**
  Doing so can cause conditions such as eye strain or decreased vision. When looking at the screen for long periods of time, rest periodically. If you feel discomfort after continued usage, stop using the video display immediately and rest. If you continue to feel discomfort, consult a physician.

When Using the Main Unit

- The screen may be damaged if it is left facing strong source of light. Please take precautions when placing it near a window.
- Do not press firmly on the screen, scratch it or place an object on the screen. It can cause non-uniformity or damage to the panel.
- The screen and cabinet may become warm during use. Note this does not constitute a malfunction.
- Viewing the display for prolonged periods of time may lead to eye strain or decreased vision. Please ensure to take rest periodically to avoid these symptoms.
- Refer to Recommendation ITU-R BT.1702 "Guidance for the reduction of photosensitive epileptic seizures caused by television" and related guidelines.

About Backlight

The backlight has a limited service life so its brightness may degrade and color may change due to aging.

About Temporary Screen burn-in

If a stationary image is displayed for a prolonged period, screen burn-in may occur where you see remnants of what was displayed. This is a characteristic of LCD and is not a failure. However, this is only temporary and will disappear when playing video.

About the LCD screen

The screen is produced using extremely high-precision manufacturing techniques, with more than 99.99% of the pixels operating to specification. Less than 0.01% of the pixels may occasionally misfire or appear as black, red, blue or green dots. In addition, this tendency may increase through long term use due to characteristic of the LCD panel. These do not constitute a malfunction.

Condensation

If this equipment is brought into a warm room while it is cold or if the room is heated suddenly, condensation may form on the surface or inside the equipment. Note that the equipment may be damaged if it is used under such condition. If condensation has formed on the surface or inside the equipment, do not use the video display as it may get damaged. Turn the power off and wait until the condensation has evaporated before using the video display.

Cleaning

- Before cleaning, be sure to unplug the power plug.
- The screen has a special surface treatment, avoid touching it directly with your hand. In addition, never affix adhesive objects such as seals.
- Never use alcohol or benzene, thinner, acidic cleaning solution, alkaline cleaning solution, abrasive or chemical wipes because these will damage the screen.
- If the screen is dirty, wipe gently with soft dry cloth such as cleaning cloth or eye glasses cleaning cloth. Wiping the screen too hard may cause unevenness on the screen or damage the LCD panel. The screen may be scratched if wiped too hard with a cleaning cloth with foreign particles attached.
- When the screen is extremely dirty, wipe with soft cloth such as cleaning cloth or eye glasses cleaning cloth moistened with water-diluted neutral detergent.
- Use a blower to remove dust from the surface of the screen.
- Wipe dirt on cabinet with a soft cloth. If the screen is very dirty, use a moistened cloth with water or mild detergent diluted with water. Do not use alcohol, benzene, paint thinner, or pesticides as they may damage the surface finish or erase characters on the cabinet.

Disposing

- Do not dispose together with normal waste. Do not include the video display in waste that will be taken to landfill.
- Observe the rules and regulations of your local authorities when disposing.

Features

The DP-V1710 / DP-V1711 Video Display provides a wide range of support for video production as a way to check video on location, in a secondary control room in a studio, or in a live broadcast vehicle.

17-Inch 4K display

- Equipped with a panel with 3840x2160 resolution and backlight system.
- Allows for high adjustment precision and high contrast.
- Works with 19-inch rack mount (7U) (complies with EIA standards)
- High uniformity is provided by minimizing the variation due to temperature changes and aging.
- Supports a range of color gamut standards (ITU-R BT.2020, ITU-R BT.709, etc.)
- Equipped with the HDR display function. (SMPTE ST 2084 and Hybrid Log-Gamma are supported)

Includes a range of interfaces to improve ease of use.

- Supports 6G-SDI (Including V1711 12G-SDI).
- Supports DC 12 V input (4 XLR pins).
- Includes the REMOTE terminal (GPI) and LAN terminal to allow control from an external device.
- Grading controllers and calibration sensors can be connected from outside using USB ports.
  (Tangent Wave's Element-Tk, Konica Minolta's CA-310, etc.)

Supports a wide range of workflows on location from videoing to editing.

- Supports 4K RAW. A 4K RAW workflow is constructed on ACES2065-1.
- CINEMA EOS SYSTEM link
- ARRI / Panasonic Camera System link
- Supports multiple LUT/CDL settings.
- Supports the "2 Sample Interleave" signal transmission method.
- Supports dual screen and quad screen displays. HDR and SDR content can be displayed for comparison and image quality adjustment using the dual-screen display.
- Includes built-in Wave Form Monitor, Vector Scope, Zoom, Peaking, False Color, and more.
- Includes a tally light.

Rigidity and flexible installation

- High durability achieved by a metal outer covering
- Includes a convenient carrying handle for portability and a stand designed to ensure stability and prevent tipping.

Nomenclature

Front face of the main unit

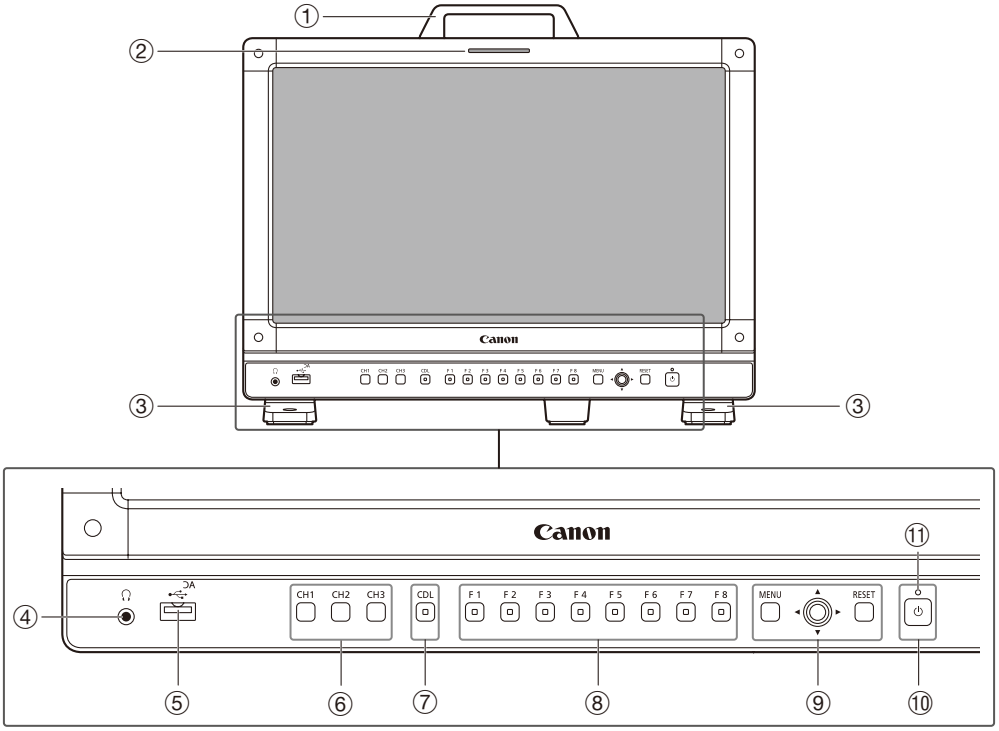

① Carrying handle (📖15)
② Tally light (📖41)
③ Front stand (📖17)
④ Headphone terminal (📖78)
⑤ USB port
For connecting an external sensor for calibration (📖32), USB memory, hub, color grading controller (Element-Tk made by Tangent Wave Ltd), or wireless LAN adapter (Wi-Fi adapter, 📖43).
⑥ Channel (CH) button CH1 to CH3 (📖38)
⑦ CDL button
For switching CDL mode.
⑧ Function (F) button F1 to F8 (📖37)
⑨ MENU button (📖26)
Jog dial (📖26)
RESET button (📖26)
⑩ ⏻ (Power) button (📖24)
⑪ Power indicator (📖24)

Back face of the main unit

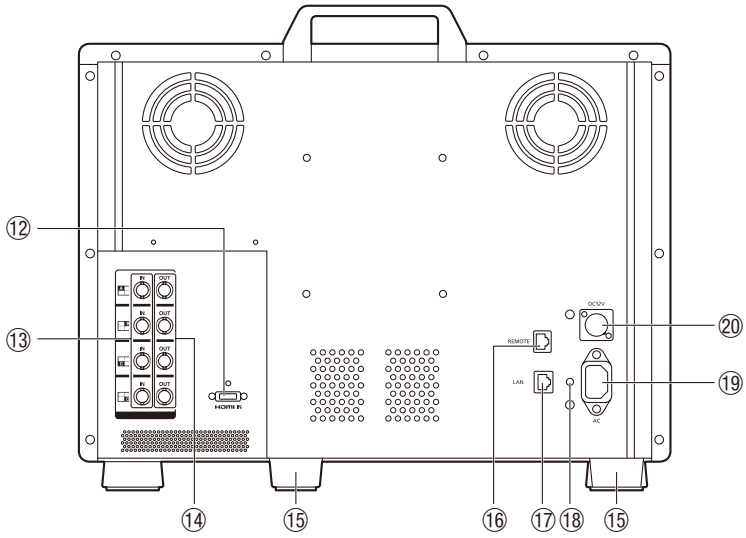

⑫ HDMI input terminal (📖23)
⑬ SDI input terminal (📖22)
⑭ SDI output terminal
For passing through output corresponding to ⑬.
⑮ Rear stand (📖17)
⑯ REMOTE terminal (📖41)
For connecting remote control devices.
⑰ LAN (10/100 BASE) terminal (📖42)
For connecting Display Controller CL-01 (included with DP-V3010), external control devices, and Canon displays
⑱ Cord clamp mounting hole (📖25)
⑲ AC power input terminal (📖24)
⑳ DC power input terminal (📖24)

CAUTION

- When connecting an external sensor for calibration to the USB port, the USB cable length must not exceed 3 m (9.8 ft.). Otherwise, communication error may occur and correct calibration may not be possible.
- The video display can perform measurement or calibration of the display using the DP-V Color Adjustment software. Refer to the Canon website for the DP-V Color Adjustment.
- **V1711** When the video display performs measurement or calibration of the display using the DP-V Color Adjustment or it is being used via LAN, "DP-V1710" will be displayed as the display name.
- Do not use the HUB when connecting a wireless LAN adapter (Wi-Fi adapter) to a USB terminal. The video display may not work.
- For safety, do not connect any connector that may have excessive voltage to the terminal of the video display when connecting peripheral devices.
- Pass through SD-SDI signals are not output correctly.

Note

- About USB Memory
  - Both FAT16 and FAT32 USB memory devices are supported.
  - Proper operation cannot be guaranteed for all USB memories.
  - It may take 10 seconds or more for the USB memory to be recognized. If the function to save data on a USB memory is executed during recognition, the message [Detecting USB memory] is displayed.
- When using a Display Controller CL-01 (provided with the DP-V3010) with the main unit, update the controller firmware version to 4.19.0 or later.

Carrying the video display

When carrying the video display, be sure to hold it by the carrying handle.

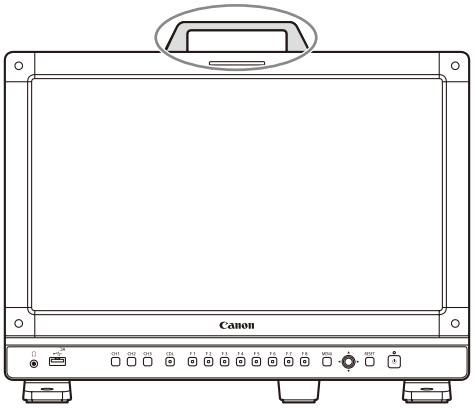

CAUTION

- When carrying the video display, handle it carefully not to touch or damage the screen.

Removing the carrying handle

The carrying handle can be removed.

1 Remove the two screws from the carrying handle, as shown in the diagram below.
   - Use a hexagonal key (6 mm).
   - Do not lose the screws or carrying handle you removed. Do not use these for other purposes.

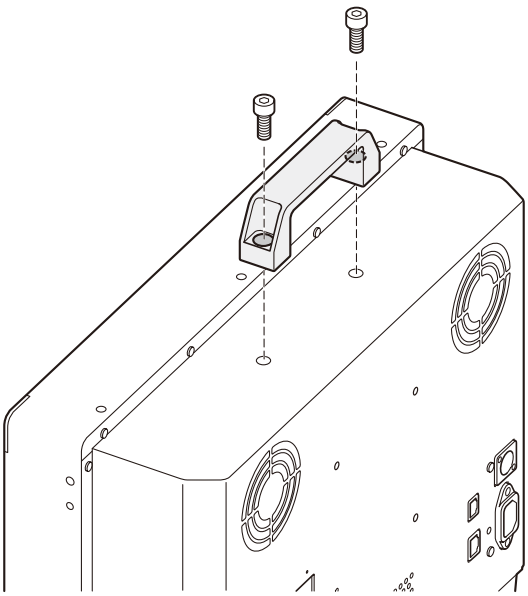

CAUTION

- Ensure that you do not touch or damage the screen during this process.
- When attaching a carrying handle to the video display, check that it's securely attached after fastening the screws.

Attaching the protective plate: PP-17U Protect Panel (sold separately)

You can attach the protection panel to protect the screen when carrying the video display or when using it outdoors. The separately-sold PP-17U Protect Panel is attached as follows. Please also see the instruction manual for the PP-17U Protect Panel.

CAUTION

- Avoid touching the screen during this step as it may damage it.

Use the HK-02 Hex Key for the Protect Panel (the 1.5 mm hexagonal key that is supplied with the Protect Panel) to remove or attach the screws.

1 Unscrew the four screws on the front face of the display.

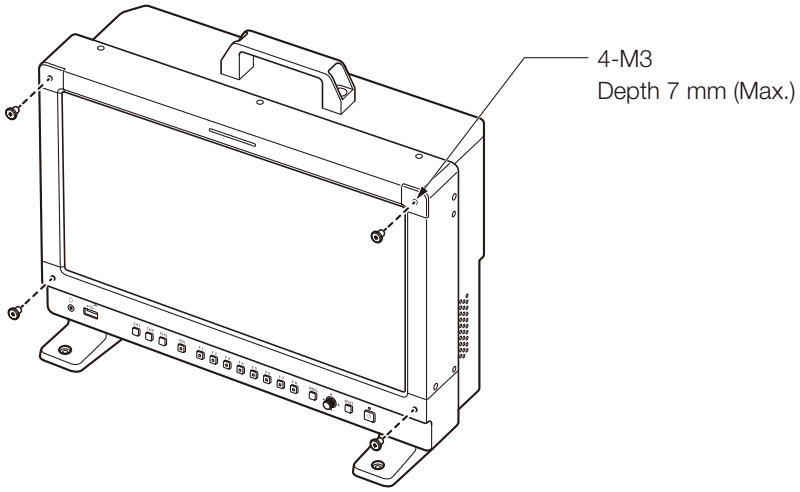

2 Remove the protective film from both sides of the Protect Panel.

3 Line up the Protect Panel and the display screw holes and fasten the screws from Step 1.
   - Take care when attaching the Protect Panel in order to avoid damaging it.

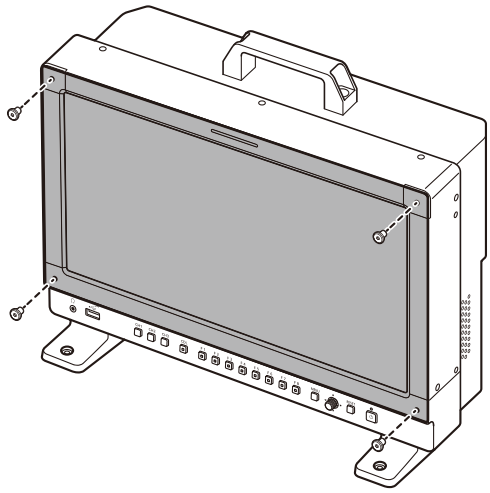

Note

- When viewing the screen with the Protect Panel in place.
  - The colors and brightness may appear different with and without the panel in place.
  - Light may reflect off the screen.

Removing/attaching the stand

The main unit is supplied with two stands which can be detached.

CAUTION

- Use a flat, clear surface when attaching/detaching the stands.
- The display can tip over if the stand has not been attached.
- Avoid touching the screen during this step as it may damage it.

Detaching

1 Place the display with the screen facing down on a soft cloth or cushioning material that is larger than the display.

2 Front stand: Remove the mounting screws (two each) from the left and right stands.
Rear stand: Remove the mounting screws (one each) from the left and right stands.
- Do not lose the removed screws. Do not use these screws for other purposes.

Attaching

1 Place the display with the screen facing down on a soft cloth or cushioning material that is larger than the display.

2 Align the position of the stand and screw hole on the video display.
- Alight the convex part of the stand and concave part of the video display.

3 Front stand: Fix the left and right stands using the mounting screws (two each).
Rear stand: Fix the left and right stands using the mounting screws (one each).

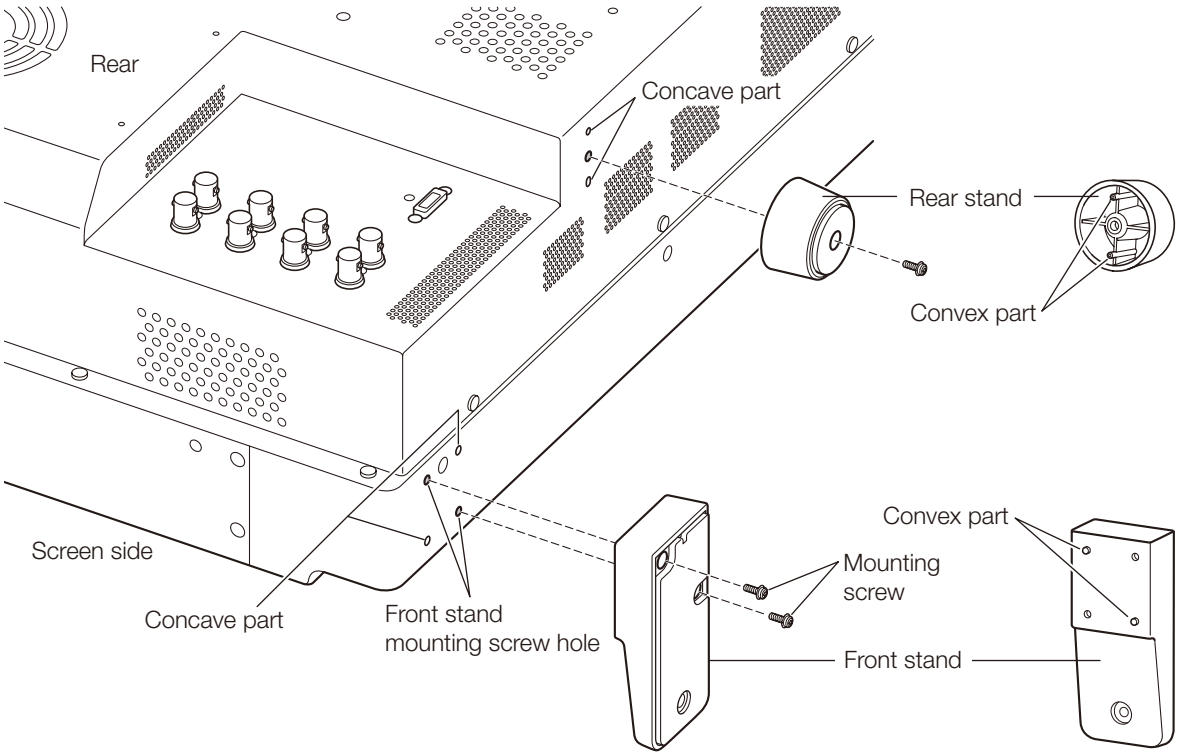

Preventing from Tipping

The video display can be fastened down to a desk or table by using the screw holes on the stand.

CAUTION

- When securing the main unit to a table or desk, please ensure the table or desk is strong enough to carry the weight of the main unit.
- It is recommended to obtain assistance from another person when performing this step.
- Avoid touching the screen during this step as it may damage it.

1 Use screws that fit the screw holes to fasten it to a desk or table.

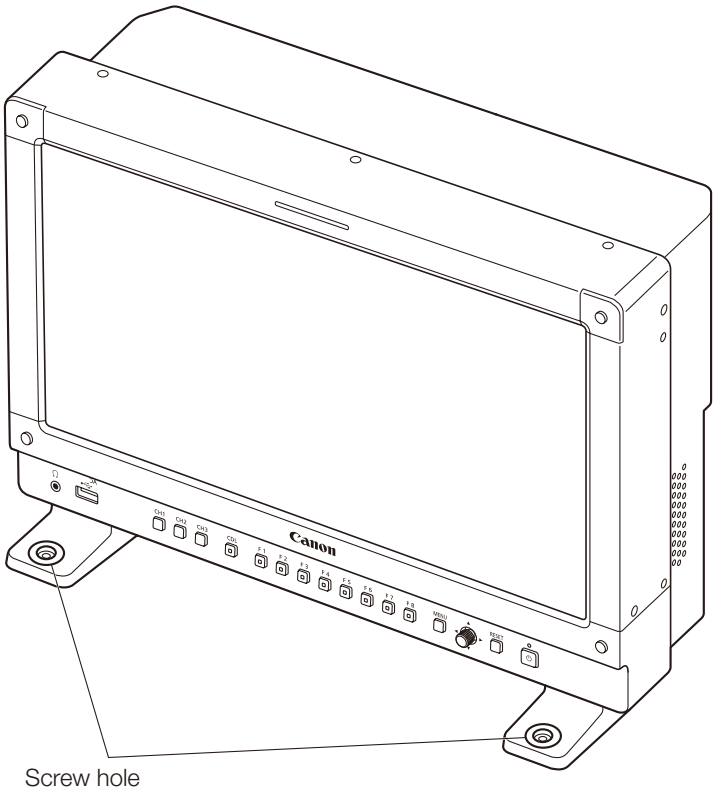

Mounting the Main Unit on a Stand or Wall

This main unit can be fitted to a stand* or to a wall mount bracket*. Remove the stands beforehand (📖17).

* Commercially available.

CAUTION

- For safety, make sure to perform this step with at least two people.
- When mounting the main unit on a wall, make sure the wall has sufficient strength. If necessary, apply reinforcement. Also, make sure to check the load capacity of the stand or wall mount bracket.
- When the video display is placed on a rack or display stand and ventilation around it is blocked by equipment placed above or below or in a surrounding area, the operating temperature may increase, causing a failure or overheating. In order to maintain the operating temperature condition of the video display (0 ˚C to 40 ˚C), make space of at least 1U (4.4 cm) above and below and at least 4 cm (1.6 in.) space from its back. Make sufficient space from peripheral equipment, secure vents, or install a ventilation fan.
- When installing the video display on a wall, make sufficient space from the wall so that cables are not squeezed or twisted.
- Avoid touching the screen during this step as it may damage it.
- Make sure that the main unit does not fall during installation/removal.

1 Attach a commercially available stand or wall mount bracket using the screw holes on the back or side face of the main unit.

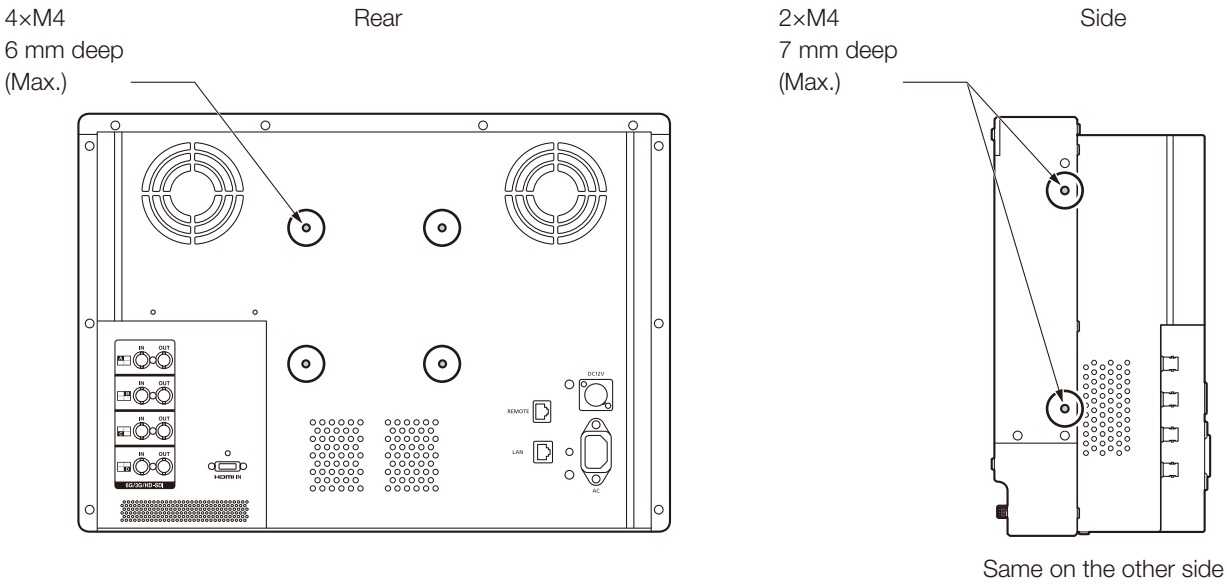

Mounting the Main Unit on a 19 Inch Rack: RB-02 Rack Mount Bracket (sold separately)

This video display is compatible with a 19-inch rack mount (7U / complies with EIA standards). The video display can be attached to a 19-inch rack using the separately-sold RB-02 Rack Mount Bracket. The angle can be selected depending on how it is attached (–15/–6/6/15 degrees). Remove the carrying handle and stand before starting work (📖15, 17).
The Rack Mount Bracket is supplied with the SW-04 and SW-05 screws for attaching it. Please also see the instruction manual for the RB-02 Rack Mount Bracket.

CAUTION

- For safety, make sure to perform this step with at least two people.
- When the video display is placed on a rack and ventilation around it is blocked by equipment placed above or below or in a surrounding area, the operating temperature may increase, causing a failure or overheating. In order to maintain the operating temperature condition of the video display (0 ˚C to 40 ˚C), make space of at least 1U (4.4 cm) above and below and at least 4 cm space from its back. Make sufficient space from peripheral equipment, secure vents, or install a ventilation fan.
- Ensure that you do not touch or damage the screen during this process.
- Make sure that the main unit does not fall during installation/removal.

1 Attaching a Rack Mount Bracket to the Video Display.
  - Use the SW-04 screws in two locations each on the left and right.

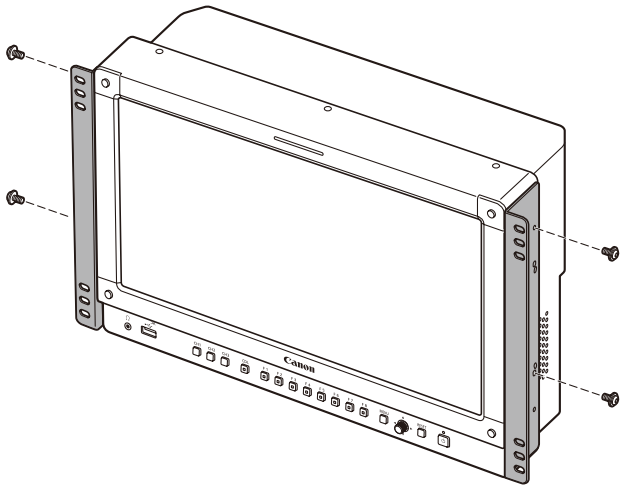

Rack Mount Bracket Screw
SW-04

Side view

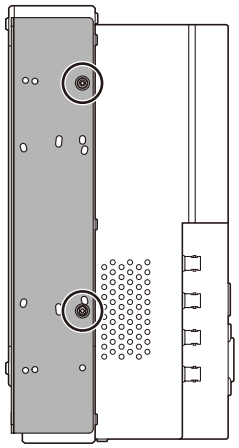

Same on the other side

- Screw positions for attaching the display at –15, –6, +6, or +15 degrees

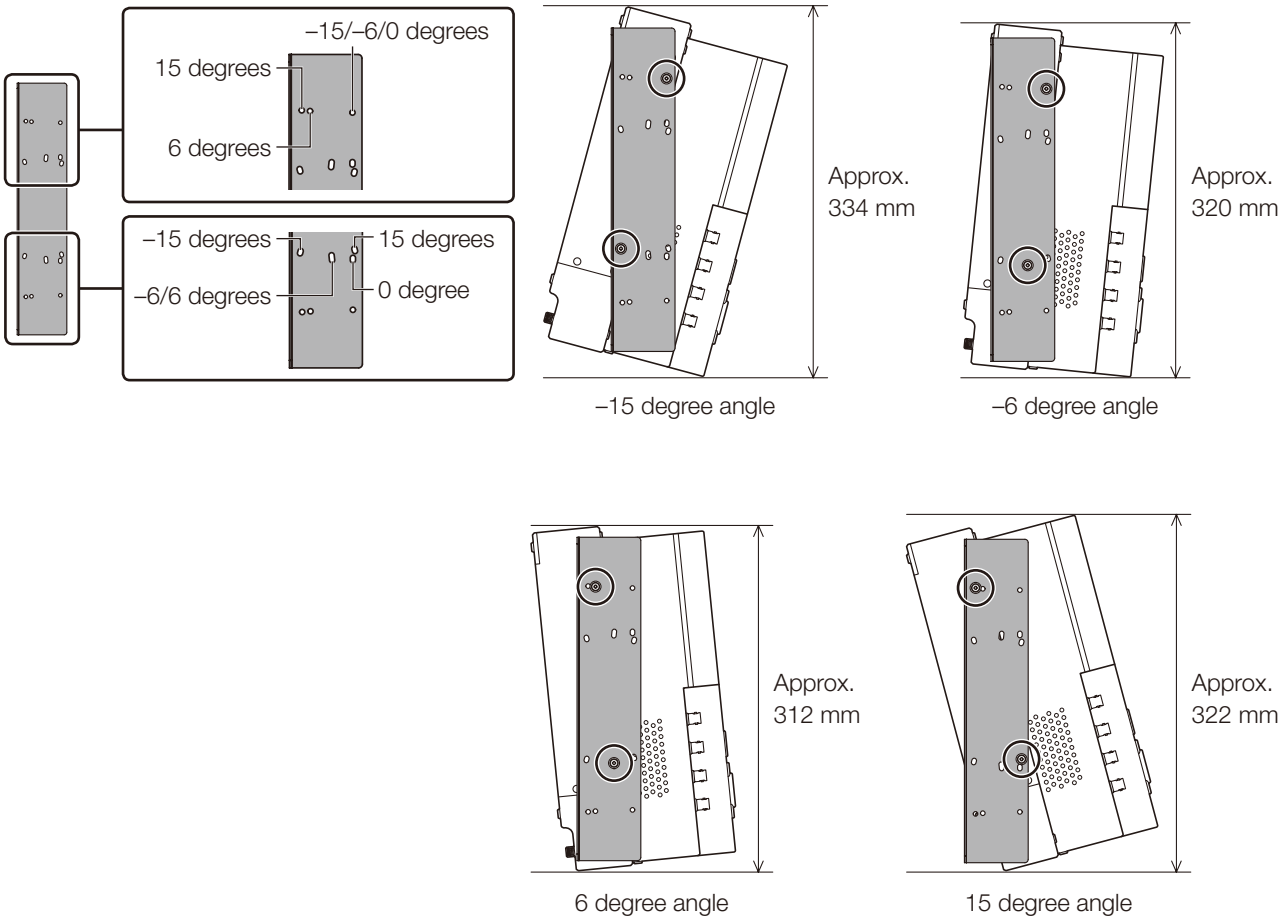

2 Attach the video display to the rack (📖114).

- Use the SW-05 screws or commercially available screws appropriate for the rack in two locations each on the left and right. We recommend attaching the video display to the rack using the middle screw holes (as shown in the illustration below) in all 4 locations.
  SW-05: M5 x 7 mm (excluding screw head)

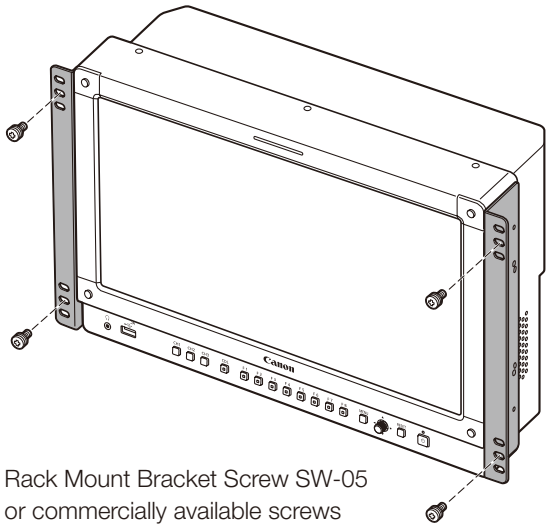

Connecting the Main Unit to Input Devices

The video display has SDI and HDMI input terminals to connect input devices.

CAUTION

- Check that the power of the video display and input devices is switched off before connecting.

SDI input signals

DP-V1710

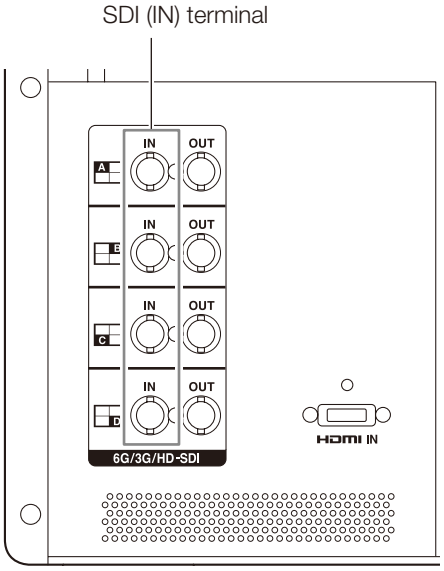

DP-V1711

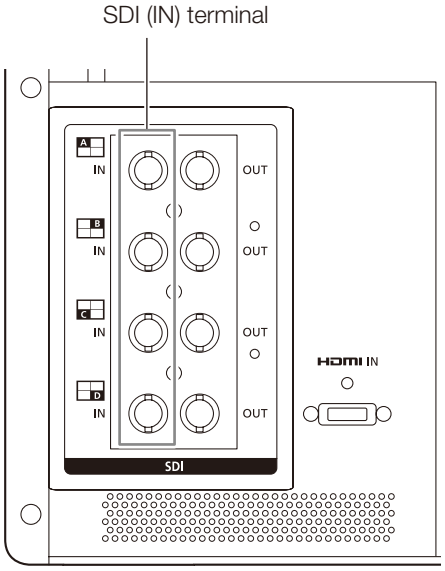

	Input signal		Input terminal	
Quad Link (Square Division)	V1710 6G/3G/HD-SDI V1711 12G/6G/3G/HD-SDI	Top left, Mapping signal	Input A	Single input system
		Top right, Mapping signal	Input B	
		Bottom left, Mapping signal	Input C	
		Bottom right, Mapping signal	Input D	
Quad Link[1] (2 Sample Interleave)	3G-SDI	Link 1	Input A	Single input system
		Link 2	Input B	
		Link 3	Input C	
		Link 4	Input D	
Dual Link[1]	6G/3G-SDI	Link 1	Input A	Two input systems
		Link 2	Input B	
		Link 1	Input C	
		Link 2	Input D	
Single Link	V1710 6G/3G/HD/SD-SDI V1711 12G/6G/3G/HD/SD-SDI	—	Input A/Input B/Input C/Input D	Four input systems

[1] The signals are automatically switched when [Link Order] is set to [Automatic].

Reference

- V1710 The connection is tested using 4VS03A-5C BNC cables (multi) manufactured by Canare Electric Co.
  V1711 The connection is tested using D5.5UHDC03E BNC cables manufactured by Canare Electric Co.
- When 3G-SDI RAW signal frequency exceeds 30.00P, it becomes a dual connection.
- Each input terminal is compatible with through output. When signals are input from Input A, connect the cable to the SDI (OUT) terminal of Input A.

HDMI input signal

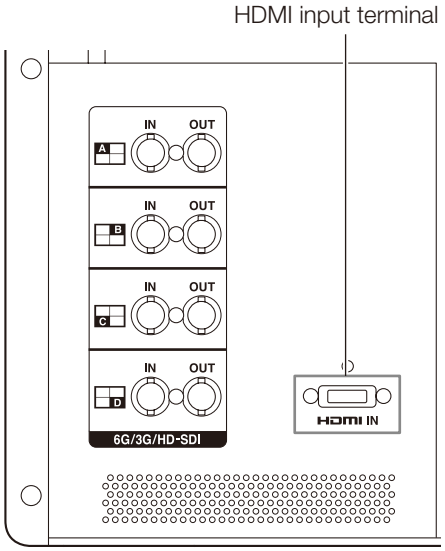

CAUTION

- Use a HDMI cable with the High Speed logo that complies with the HDMI standard. When a non-compliant HDMI standard cable is used, the video display may not work normally, for example a video becomes choppy or nothing is displayed.

Turning on the Power of the Main Unit

1 When using AC power supply

Plug the provided AC power cord HT-21 to the AC power supply input terminal at the rear.

- The video display goes into standby and the power indicator lights up in amber.

When using DC power supply (12 V DC)

Insert the DC power cord into the DC power supply input terminal at the rear.

- When connected normally, the video display goes into standby and the power indicator lights up in amber.
- DC power supply input terminal specifications are shown below.

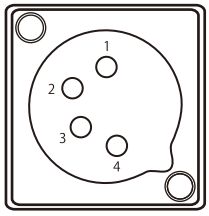

Pin No.	Signal
1	- (GND)
2	N.C.
3	N.C.
4	+ (12 V, max. 10 A)

2 Press the power supply button ⏻ at the front.

- The power indicator lights green.

About the power indicator

Displays the status of the main unit. The brightness of the power indicator can be set from [Off] or [1 (dark)] to [5 (brightest)] (📖105). The power indicator will flash during firmware updates or when an error is detected even if it is set to [Off].

Off: when power supply is not connected

Green lit: when a power supply is connected and the power of the video display is on

Green flash: during calibration or firmware update

Amber lit: during standby (a power supply is connected and the power to the video display is off)

Amber flash: when error is detected

CAUTION

- Check the specifications of the DC power supply input terminal and use a power supply that is compatible with the video display. Using a power supply with incompatible voltage and polarity may cause fire or electric shock.
- Use a DC power cord with an allowable current of at least 10 A and a length of 2 m or less. If a DC power cord longer than 2 m is used, the video display may not work normally: for example, the video becomes choppy or nothing is displayed.
- Do not connect cables for audio devices or sound cables to the DC power supply input terminal, as it may cause damage to the display unit.

Note

- Warming-up is necessary to stabilize the brightness of the video display. Wait at least 10 minutes after turning on the power before using.
- When an AC power supply is connected during the use of DC power supply, the power source is switched to the AC power supply. When this happens, the power is turned off temporarily and then turned on again.

Attaching/detaching the HC-01 AC Power Cord Clamp (provided)

Attaching

Install the AC power cord clamp before connecting the AC power cord to the main unit.

1 Insert the AC power cord clamp connector into the cord clamp mounting hole (①).

2 Connect the AC power cord to the main unit (②).

3 Secure the AC power cord in place with the holder (③).
- The holder should always be fastened in the position shown in the illustration of the AC power cord.

4 Press the holder against the main unit (④).
- Make sure that there is no slack (**A**).
- Pulling the holder lock lever in the direction of the arrow will allow you to adjust the holder position (⑤).

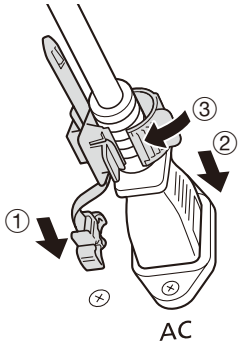

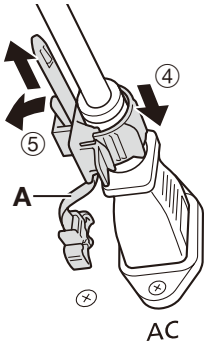

Detaching

1 Pull the holder lever in the direction of the arrow (⑥) and remove the AC power cord clamp from the AC power cord.

2 Press the knobs on the top and bottom and pull out the AC power cord clamp from the video display (⑦).

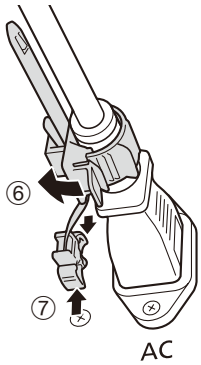

Operating the Video Display

Using buttons and jog dial on the video display, you can adjust image quality and configure settings for input signals. In addition, you can assign frequently used functions to the CH (Channel) and F (Function) buttons.

Basic operations to use the OSD menu

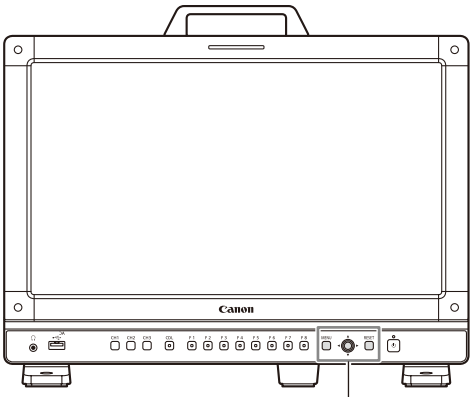

MENU button
Opens/closes the OSD menu, or moves up one level in a menu.

RESET button
Resets the items to be adjusted using the slider and entered characters.

Jog dial
▲▼◀▶ or rotation: Used to move to a different item and change settings.
Press: Confirms settings or moves the selection frame up/down 1 level.

The video display settings are changed from the OSD menu.

1 Open the OSD menu.
- Press the MENU button.

2 Select the Main Menu.
- Select the Main Menu item using the jog dial and press it to determine the selection.

3 Select the Sub Menu.
- Select the Sub Menu item using the jog dial and press it to determine the selection.

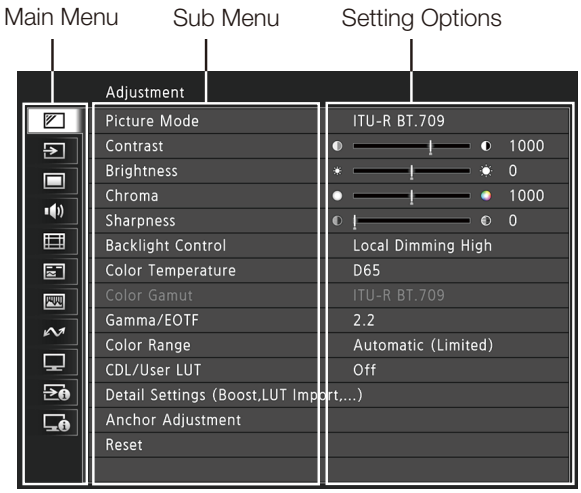

4 Select the setting to change.
- Select the setting to change using the jog dial and press it to determine the selection. You will be returned to the Sub Menu item selection screen.

5 Exit menu.
- Pressing the MENU button will return you to the Main Menu item selection screen. Pressing the MENU button again will close the menu screen.

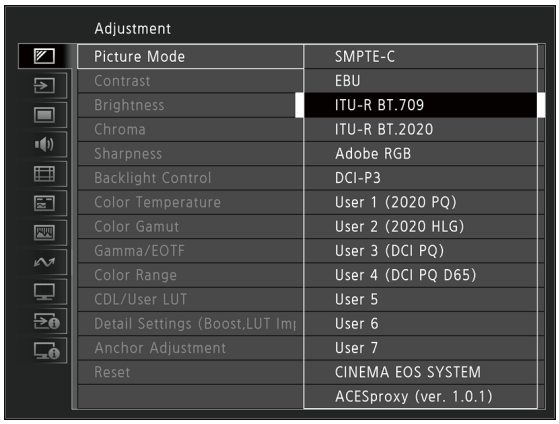

Note

- To adjust image quality, warming-up is necessary to stabilize the brightness of the video display. Wait at least 10 minutes after turning on the power before using.
- The OSD menu and slider will disappear automatically if no operation is performed for approximately 1 minute. The F button will disappear automatically if no operation is performed for approximately 10 seconds.
- The settings that cannot be set, are grayed out.
- The following functions can be returned to their factory default settings or their anchor point (📖 29) by pressing the RESET button, after adjusting the image quality.
  - [Contrast], [Brightness], [Chroma], [Sharpness], [Power], [Saturation], [Offset], [Slope]

  When [Picture Mode] ➤ [User 1–7]: When executing calibration, pressing the RESET button while adjusting the image quality will return you to the settings after calibration.

Adjusting Image Quality While Viewing the Entire Image

You can adjust the OSD menu to display as a slider at the bottom of the screen. This allows for the image quality to be adjusted whilst it is displayed on the screen.

1 Press the jog dial when the selection frame is on setting options.
- A slider appears at the bottom of the screen.

2 Make adjustments using the jog dial with using the slider as guide.

3 When adjustments are completed, press the jog dial.
- The screen returns to the original OSD menu.

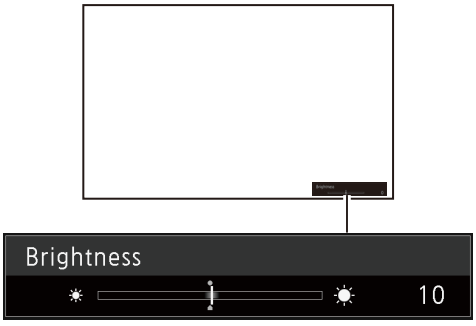

Color temperature detailed settings (gain, bias)

You can adjust RGB all at once or individually when the screens for adjusting [Gain] or [Bias] are displayed.

1 Open the [Color Temperature] menu.
MENU ➤ [Adjustment] ➤ [Color Temperature]
- [Gain R], [Gain G], [Gain B], [Bias R], [Bias G], and [Bias B] can be set individually using the jog dial (◀▶).

2 Select one.
- The setting screen for [Gain] or [Bias] will be displayed.

3 Switch the guide in the upper right area of the slider screen using the jog dial (▲▼).
- The indication changes to [RGB], [R], [G], and [B]. Selecting [RGB] will allow you to adjust RGB as a whole.

4 When adjustments are completed, press the jog dial.
- The screen returns to the original OSD menu.

Color temperature detailed settings (xy values)

1 Open the [Color Temperature] menu.
MENU ➤ [Adjustment] ➤ [Color Temperature]

2 Select [Custom (xy)].
- You can set [x] and [y] individually using the jog dial (◀▶).

3 Select either [x] or [y].
- The color map is displayed.

4 Adjust [x] with the ◀▶ and [y] with ▲▼.
- The adjusted value is indicated by the "◯" mark on the color map.

5 When adjustments are completed, press the jog dial.
- The screen returns to the original OSD menu.

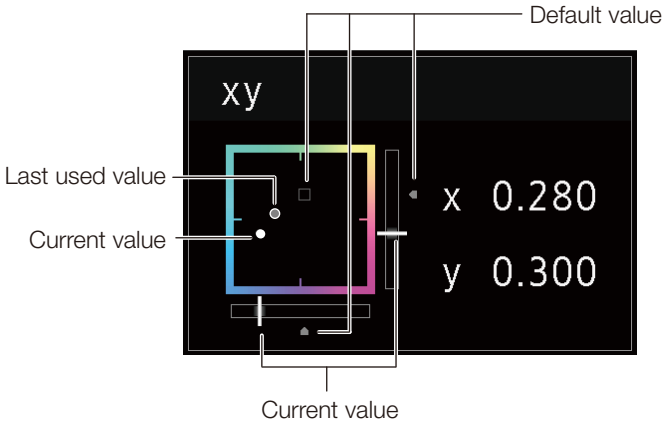

Temporarily Saving Parameters (Anchor Point Setting)

You can temporarily save parameters for [Contrast], [Brightness], [Chroma], [Sharpness], and [HDR Range]. See 📖58 for setting anchor points during CDL adjustment.

1 Open the [Anchor Adjustment] menu.
MENU ➤ [Adjustment] ➤ [Anchor Adjustment]

2 Press the jog dial, and when the confirmation screen appears, select [OK].
- The parameter is saved and the anchor point is set.

3 Adjust the image quality again and press the RESET button on the video display.
- Returns you to the anchor point for each function.

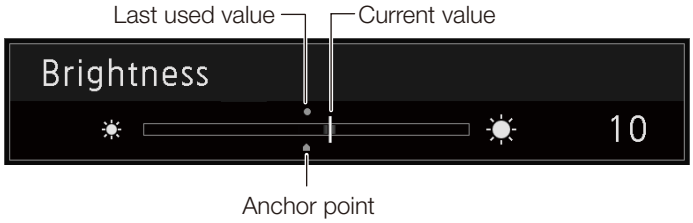

Note

- Executing [Adjustment] ➤ [Reset] or [System Settings] ➤ [Reset All Settings] resets saved anchor points and the settings return to their factory default values.
- When calibration is executed, the values are saved as anchor points.

Enlarging the display (Zoom function) (📖75)

The zoom display position can be adjusted, and the zoom magnification (2x, 4x, 8x) can be selected.

1 Open the [Zoom] menu.
MENU ➤ [Display Settings] ➤ [Zoom]

2 Select [Zoom Preset] using the jog dial.
- Select a preset zoom display.

3 Select [Position] using the jog dial.
- The zoom adjustment screen is displayed.
  - To move the display position: Move the jog dial (▲▼◀▶ or rotation).
  - To return to the center: Press the RESET button.

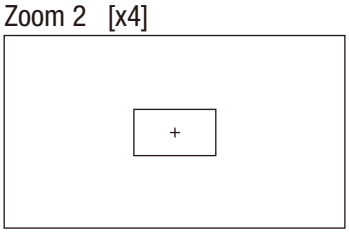

4 When adjustments are completed, press the jog dial.
- The screen returns to the original OSD menu.

Note

- When magnifying the image and the OSD menu is not being displayed,
  - you can set the magnification ratio by pressing the jog dial.
  - You can move the display location by moving the jog dial (▲▼◀▶ or rotation).
  - You can set the following functions using the CH button:
    CH1: Select zoom type; CH2: Switch between zoom presets (Zoom 1/Zoom 2/Zoom 3); CH3: Zoom off

Changing Image Quality Automatically According to Input Signal

On this video display, you can automatically change the image quality according to video resolution or metadata.

Changing [Picture Mode] automatically (📖71)

1 Select the [Select Channel] menu.
MENU ➤ [Channel Settings] ➤ [Select Channel]
- Select the channel.

2 Open the [Type] menu.
MENU ➤ [Channel Settings] ➤ [Picture Mode] ➤ [Type]

3 Select the Type using the jog dial.
Changing by individual video resolution (4K/2K)
Select [4K/2K].

Changing according to video resolution (4K/2K) or metadata (SDI)
Select [Automatic].

4 Select the Picture Mode using the jog dial.

Changing the image quality setting according to video metadata (HDMI) (📖61)

1 Select [User 1] to [User 7].
MENU ➤ [Adjustment] ➤ [Picture Mode] ➤ [User 1-7]

2 Open the [Type] menu.
MENU ➤ [Channel Settings] ➤ [Picture Mode] ➤ [Type]
- Select other than [L/R].

3 Open the [Automatic Adjustment] menu.
MENU ➤ [Adjustment] ➤ [Detail Settings] ➤ [HDMI Link] ➤ [Automatic Adjustment]
- Select [On].
- See [HDMI Link] (📖61) for the configurable settings.

ⓘ Note

- When automatic changing of image quality according to video resolution (4K/2K) or SDI metadata is set, information showing which resolution (4K/2K, etc.) is selected will be displayed at the top right of the menu screen.

Resolution: 4K

Adjust image quality on left/right side of screen (image comparison mode)

You can divide the screen in two and adjust the image quality on the left and right sides of the screen individually.

1 Open the [Type] menu.
MENU ➤ [Channel Settings] ➤ [Picture Mode] ➤ [Type]
- Select [L/R].

2 Select the screen to adjust image quality.
- When the OSD menu is opened:
  - Press the ◀ in the jog dial when the [Adjustment] main menu is selected.
  - Press the CH1 button when the [Adjustment] main menu or sub menu is selected.
- When the OSD menu is closed: Switch using the jog dial (◀▶).
- Each time the target screen is switched, the set [Picture Mode] is displayed at the top.

3 Adjust the image quality on the selected screen.

Note

- When in Image Comparison mode, an icon showing which screen (L/R) is selected for image quality adjustment will be displayed at the right top of the [Adjustment] menu screen.
- The functions that cannot be used when the right screen is selected are as follows.
  - Sub Menu items for [Adjustment]: [Contrast], [Backlight Control], [Boost Contrast] OPTION, [HDR/SDR View], [Calibration]
- When two screens are displayed, you can adjust the image quality on each screen individually and compare them.
  - When two screens are displaying the same image ([Single Input Dual View] 📖72)
  - When two screens are displaying different images ([Multi View (Dual)] 📖70)
  - You can check HDR (High Dynamic Range) display and SDR (Standard Dynamic Range) display side-by-side. ([HDR/SDR View] 📖60)

Changing the screen display area

When a video signal of 4096x2160 or 2048x1080 is input, the left and right parts will be trimmed for display.

1 Open the [Image Division] menu.
MENU ➤ [Channel Settings] ➤ [Image Division]
- Once [Square Division] has been selected, press the jog dial to determine the selection.

2 Open the [Screen Scaling] menu.
MENU ➤ [Display Settings] ➤ [Screen Scaling]
- Once either [Native] has been selected, press the jog dial to determine the selection.

3 Press the jog dial (◀▶) while the OSD menu is closed.
- Shifts to the left or right.

Performing calibrations (📖61)

You can perform calibration using an external sensor, without using a computer.
The supported external sensors are Konika Minolta Display Color Analyzers CA-310 and CA-210. Be sure to also read the instruction manual of the CA-310 and CA-210.
The video display can perform measurement or calibration of the display using the DP-V Color Adjustment software. Refer to the Canon website for the DP-V Color Adjustment.

1 Connect the display color analyzer to the USB port of the main unit.

2 Select [User 1] to [User 7] and then open the [Calibration] menu.
① MENU ➤ [Adjustment] ➤ [Picture Mode] ➤ [User 1–7]
② MENU ➤ [Adjustment] ➤ [Detail Settings] ➤ [Calibration]
• Set each target value.

3 Press the jog dial and select [Start].
• Please follow the information indicated on the screen.

4 Initialize the sensor.
• Set the mode dial of the Universal Measuring Probe to [0-CAL].
• Press the jog dial of the video display, select [OK], and execute initialization.

5 Place the universal measuring probe pointing at the center of the video display.
• Set the mode dial of the universal measuring probe to [MEAS] and place the probe as shown below according to the displayed content. Press the jog dial of the video display, select [OK], and execute calibration.

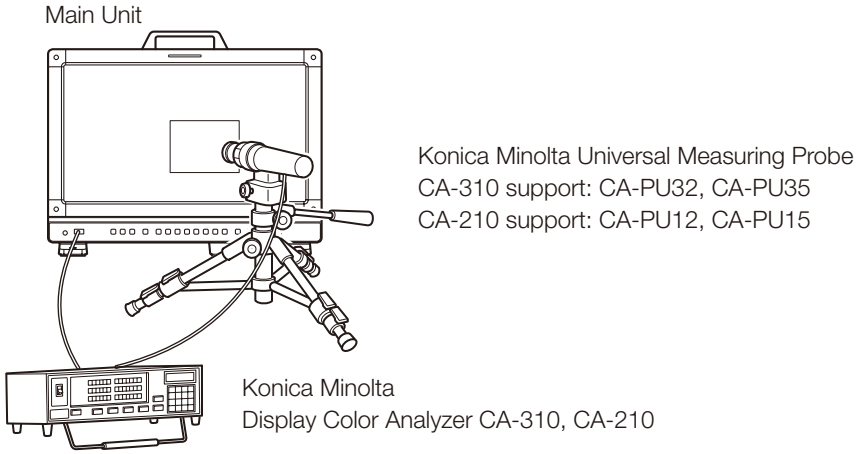

6 Finish calibration.
• When the message [Calibration is completed.] is displayed, press the jog dial and select [OK].

• If the message [Calibration error.] is displayed.
Calibration has been terminated due to an error. The main unit returns to the state before calibration. (📖133)
• To cancel calibration
Press the jog dial during calibration and select [Cancel]. The main unit returns to the state before calibration.

Note

- Perform matrix calibration of the display color analyzer prior to calibration. If calibration is performed without performing matrix calibration, an error may occur. Refer to the CA-310 and CA-210 instruction manual for the detail operation.
- Warming-up is necessary to stabilize the brightness of the video display. Wait at least 10 minutes after turning on the power before calibration.
- Perform calibration in a dark room so that no external light enters the sensor. If external light enters the sensor, low brightness characteristics cannot be calibrated correctly.
- Due to the characteristic of LCD panel and individual difference of CA-310 and CA-210, the calibration results may differ.

Export/Import

You can export/import LUT and CDL parameters as well as main menu settings.

LUT Import (📖59)

1 Insert a USB memory stick into the USB port of the main unit.

2 Open the [LUT Import] menu.
MENU ➤ [Adjustment] ➤ [Detail Settings] ➤ [LUT Import]

3 Select the file using the jog dial.
- In the [Filename] field, search and display a file with extension [.clut] in the root folder.

4 Select the LUT type using the jog dial.
- Select the LUT type by using [User LUT], [Gamma LUT] or [Gamut LUT].
- Refer to the "Concept Drawing of Display Image Processing and LUT" (📖34). Or, also refer to the "User LUT Creation Guide" on the Canon website.

5 Select [Select LUT] using the jog dial.
- Selects User LUT 1-8/Gamma LUT 1-8/Gamut LUT 1-8.

6 Select the standard color gamut using the jog dial.
- Select the color gamut used when creating the LUT (when [Gamut LUT] under [LUT Type] is selected).

7 Select [Execute] using the jog dial.
- When the confirmation screen appears, select [OK]. Import starts.

Note

- The LUT file is proprietary to Canon Video Display. Refer to the Canon website for the file format and how to create.
- Up to 1000 LUT import files are recognized.
- You can delete the imported LUT. You can specify the name of LUT (📖59).

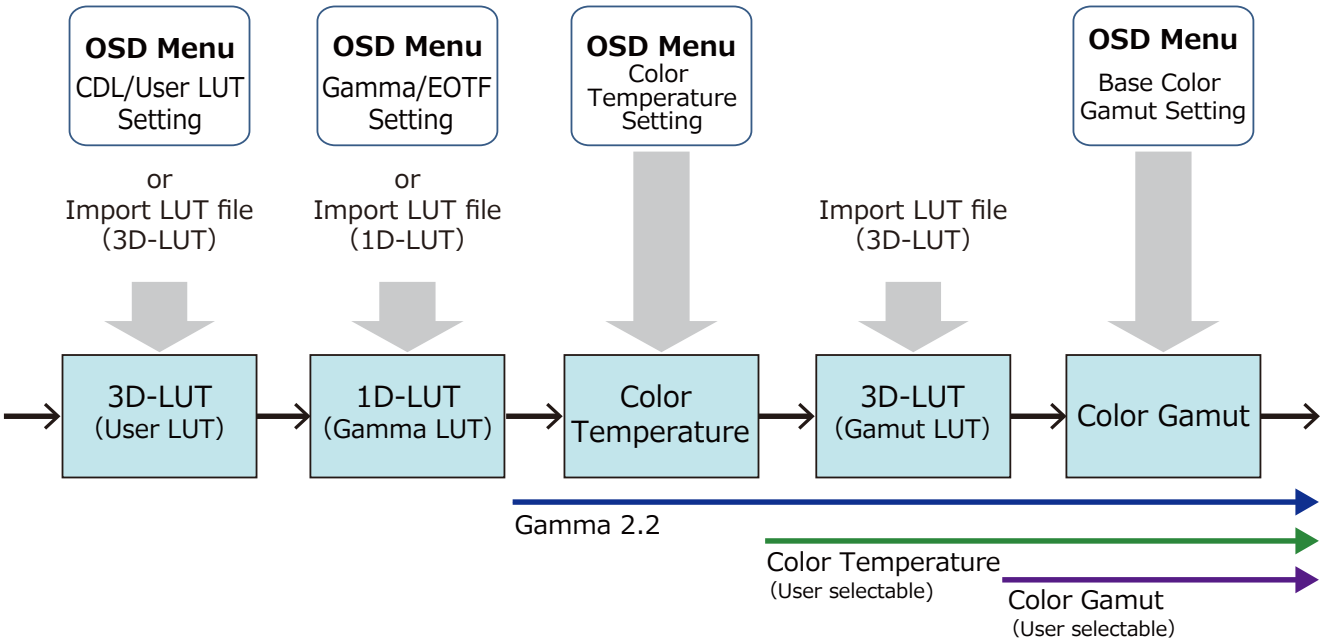

Concept Drawing of Display Image Processing and LUT

Export/Import Main Menu Settings (📖106)

1 Open the [Export/Import] menu.
MENU ➤ [System Settings] ➤ [Export/Import]

2 Select [Export] or [Import] using the jog dial.

Exporting

①Select [Target] from [USB], [User 1] to [User 3] or [LAN].
Export [USB] to the USB memory and [User 1] to [User 3] to the built-in memory of the main unit. When you select [LAN], the file is exported to a display connected via LAN.

②If you selected [USB] or [User 1] to [User 3], select [Filename].

- Factory default is [dinfo_dpv1710.dat] (V1711 [dinfo_dpv1711.dat]). You can change the name of the file to be exported to the USB memory within 16 one-byte characters including alphabetical characters, numbers, and symbols.

If you selected [LAN], select [Display].

- Select the display to which to export the settings from the displays connected via LAN.

Importing

①Select [Target] from [USB] or [User 1] to [User 3].
Specify the destination to save the file to be imported.

②Select [Filename] when [USB] is selected.

③In [Settings], select [All] or Main Menu name.

3 Select [Execute] using the jog dial.

- When the confirmation screen appears, select [OK]. Export/Import starts.

Note

- After export to [User 1] to [User 3], you can select the configurations at startup from [User 1] to [User 3] in [Power on Setting] in [System Settings] (📖106).
- To export this device's settings to other Canon displays:
  - If a display model has functions with different menu settings or setting ranges, some settings will not be correctly exported (settings will not be changed, will revert to factory defaults, etc.)
  - When the export is completed, a message will appear on the target display.

Exporting/Importing CDL Parameters (📖58)

1 Open the [CDL/User LUT] menu.
MENU ➤ [Adjustment] ➤ [CDL/User LUT]

2 Select [CDL 1-8] using the jog dial.

3 Select [Detail Settings] ➤ [CDL Export] or [CDL Import].

Exporting
①Select [CDL Preset].
②Select a file format [.ccc] or [.cdl].

Importing
①Select [Filename].
②Select [CDL Preset].

4 Select [Execute] using the jog dial.
- When the confirmation screen appears, select [OK]. Export/Import starts.

Note

- The exported file is automatically saved under the name "YYYYMMDDhhmmss_Preset name.ccc (cdl)".
- Up to 1000 CDL import files are recognized.

Set Date/Time (📖103)

This section describes how to set the Date/Time. The Date/Time of this video display will be reset if the power cord is not connected for about 20 days.

1 Open the [Date/Time] menu.
MENU ➤ [System Settings] ➤ [Date/Time]
- A screen to input the Date/Time appears.

2 Set the Date/Time using the jog dial.
- The selection frame moves and numbers change as you operate the jog dial. Repeat until you complete setting the year, month, date, hour, and minute.

3 Press the jog dial when you are finished.
- The selection frame moves to [OK].

4 Check the content and press the jog dial to confirm the settings.

Reference

- When selecting [Cancel] or pressing MENU button before selecting [OK], the settings will be reset and the previous screen will be displayed.

Inputting Characters

This section describes how to input the characters.

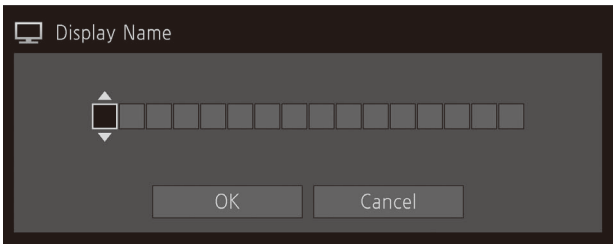

1 When the character input screen is displayed, use the jog dial (◀ ▶) to select the area you wish to input.

2 Select characters using the jog dial (▲▼ or rotation).
- The following characters can be selected: Press ▲▼ buttons to display them one by one.
  Alphanumeric characters: A to Z, a to z, 0 to 9
  Symbols: , . : ; ‘ ` - + / = % & ! ? # _ | $ ^ ~ @ { } [ ] < >
  ( ) space
- Characters that cannot be entered are automatically skipped.

3 Repeat steps 1 and 2 until the desired text has been inputted.

4 Press the jog dial when you are finished.
- The selection frame moves to [OK].

5 Check the content and press the jog dial to confirm the settings.

Reference

- When selecting [Cancel] or pressing MENU button before selecting [OK], the settings will be reset and the previous screen will be displayed.
- To erase characters in the selection frame or reset it, press the RESET button on the video display.

Using the Function (F) Buttons

You can assign functions to the F buttons on the video display to execute them instantly. You can assign different functions on F buttons in the normal and CDL modes respectively.

1 Open the [Display Function] or [Display Function (CDL)] menu.
MENU ➤ [System Settings] ➤ [Function/Channel Button] ➤ [Display Function] or [Display Function (CDL)]
- The button selection screen will be displayed.

2 Select the name of the button using the jog dial and press the jog dial to determine the selection.

3 Select the function to assign using the jog dial.
- Refer to the "Function to allow registration for the display F buttons (📖108)" for the available functions.

4 Press the jog dial to determine the selection.
- The setting is confirmed.

The following content is assigned to function buttons on the video display by factory default.

F button	Normal mode	CDL mode
F1	Picture Mode	CDL/User LUT
F2	Brightness	CDL SOP/SAT
F3	TC/ALM	CDL/User LUT Bypass
F4	WFM/VEC	Single Input Dual View
F5	Histogram/Frame Luminance	False Color
F6	Pixel Value Check	Over Range
F7	Zoom Preset	2020 Outside of Gamut View
F8	Boost Contrast	Compare View

Reference

- Holding the F button down will display the function selection screen, and you can set the function you wish to register.
- You can check the function assigned to the F buttons of the main unit.
  Open the MENU ➤ [System Settings] ➤ [OSD Settings] ➤ [Function Button Guide] menu and select [On]. Pressing/moving the jog dial (▲▼◀▶, or Rotate) while OSD is not showing will display the list of functions. Selecting a function from the list and pressing/moving (▶) the jog dial will display the detailed settings screen, or execute that function.

Using the Channel (CH) Button

You can assign channels (various settings related to input signal) to the CH buttons on the video display and switch channels instantly.

1 Open the [Display Channel] menu.
MENU ➤ [System Settings] ➤ [Function/Channel Button] ➤ [Display Channel]
- The button selection screen will be displayed.

2 Select the name of the button using the jog dial and press the jog dial to determine the selection.

3 Select the channel to assign using the jog dial.
- See [Channel Settings] (📖69) for the configurable settings.

4 Press the jog dial to determine the selection.
- The setting is confirmed.

The following content is assigned to channel buttons on the video display and to each channel by factory default.

CH		CH1	CH2	CH3	CH4	CH5
Input Configuration	V1710	6G/3G/HD-SDI	HDMI	3G-SDI RAW	6G/3G/HD-SDI	6G/3G/HD-SDI
	V1711	12-3G/HD-SDI	HDMI	3G-SDI RAW	12-3G/HD-SDI	12-3G/HD-SDI
Select Input Signal		Automatic	Automatic	Automatic	Automatic	Automatic
Image Division		Automatic	Automatic	Automatic	Automatic	Automatic
Link Order		Automatic	Automatic	Automatic	Automatic	Automatic
Format		Automatic	Automatic	Automatic	Automatic	Automatic
Audio Input		Automatic	Automatic	Automatic	Automatic	Automatic
Marker/TC/CameraInfo Input		Input A	Input A	Input A	Input A	Input A
Internal Sync		Off	Off	Off	Off	Off
Channel Name		(Blank)	(Blank)	(Blank)	(Blank)	(Blank)
Picture Mode ❯ Type		Normal	Normal	Normal	4K/2K	L/R
Picture Mode Picture Mode L Resolution 4K		ITU-R BT.709	ITU-R BT.709	CINEMA EOS SYSTEM	User 1 (2020 PQ)	User 1 (2020 PQ)
Picture Mode R Resolution 2K		ITU-R BT.709				
Payload	UHD/PQ	User 1 (2020 PQ)				
	UHD/HLG	User 2 (2020 HLG)				
	UHD	ITU-R BT.2020				
	709/PQ	—				
	709/HLG	—				
	709	ITU-R BT.709				
	VANC	—				
	Unknown	—				
Camera	CINEMA EOS SYSTEM	CINEMA EOS SYSTEM				
	ARRI	User 6				
	VARICAM	User 7				
Single Input Dual View		Off	Off	Off	Automatic	Off
Separator		Off	Off	Off	Off	White

CH		CH6	CH7	CH8	CH9	CH10~CH20
Input Configuration	V1710	6G/3G/HD-SDI	6G/3G/HD-SDI	6G/3G/HD-SDI	6G/3G/HD-SDI	— (Not set)
	V1711	12-3G/HD-SDI	12-3G/HD-SDI	12-3G/HD-SDI	12-3G/HD-SDI	— (Not set)
Select Input Signal		Automatic	Automatic	Automatic	Automatic	Automatic
Image Division		Automatic	Automatic	Automatic	Automatic	Automatic
Link Order		Automatic	Automatic	Automatic	Automatic	Automatic
Format		Automatic	Automatic	Automatic	Automatic	Automatic
Audio Input		Automatic	Automatic	Automatic	Automatic	Automatic
Marker/TC/CameraInfo Input		Input A	Input A	Input A	Input A	Input A
Internal Sync		Off	Off	Off	Off	Off
Channel Name		(Blank)	(Blank)	(Blank)	(Blank)	(Blank)
Picture Mode ❯ Type		L/R	4K/2K	L/R	L/R	Normal
Picture Mode Picture Mode L Resolution 4K		User 1 (2020 PQ)	User 2 (2020 HLG)	User 2 (2020 HLG)	User 2 (2020 HLG)	ITU-R BT.709
Picture Mode R Resolution 2K		ITU-R BT.709				
Payload	UHD/PQ	User 1 (2020 PQ)				
	UHD/HLG	User 2 (2020 HLG)				
	UHD	ITU-R BT.2020				
	709/PQ	—				
	709/HLG	—				
	709	ITU-R BT.709				
	VANC	—				
	Unknown	—				
Camera	CINEMA EOS SYSTEM	CINEMA EOS SYSTEM				
	ARRI	User 6				
	VARICAM	User 7				
Single Input Dual View		Automatic	Automatic	Off	Automatic	Off
Separator		Off	Off	White	Off	Off

Note

- Holding the CH button down displays the channel list, allowing the user to select the desired channel. However, in the following cases, a list of input signals will be displayed and the user can temporarily switch signals: When a 6G-SDI signal (V1711 a 12G-SDI signal or 6G-SDI signal) is input; or when video that can be displayed simultaneously with a 6G-SDI signal (V1711 a 12G-SDI or 6G-SDI signal) is input and [Select Input Signal] is set to [Automatic].

Checking Signal Information and Status of the Main Unit

The video display is equipped with a banner display function.

1 Press the jog dial when the OSD menu is closed.
- The channel name, signal information, and status of the main unit will be displayed in the banner. It will automatically disappear after 6 seconds.

Note

- You can select how the banner is displayed (104).
  MENU ➤ [System Settings] ➤ [OSD Settings] ➤ [Banner]
- You can monitor the input signal status. (90)
  MENU ➤ [Function Settings] ➤ [Signal Monitoring]
- For more detailed signal information, please refer to the section on [Signal Information] (110).
- The [Detecting sync.] banner will continue to appear until the input signal is synchronized.

Operating the video display using an external device [REMOTE terminal (GPI)]

You can operate the video display using an external device connected to the REMOTE terminal and execute the functions registered in each pin. Remote operation is possible only when the video display is turned on.

Pin layout for REMOTE terminal

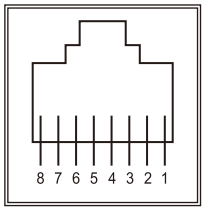

Pin No.	Signal	Factory default
1	Pin1	CH1
2	Pin2	CH2
3	Pin3	CH3
4	Pin4	Time Code
5	Pin5	Tally Green
6	Pin6	Tally Red
7	Pin7	Power On
8	Pin8 (GND)	—

1 Connect an external control device to the REMOTE terminal.

2 Open the [Remote(GPI)] menu.
MENU ➤ [System Settings] ➤ [Remote(GPI)]
- The pin selection screen will be displayed.

3 Select a pin number using the jog dial and press it to determine the selection.

4 Select the function to assign using the jog dial.
- Please see [Remote(GPI)] (103) for settable functions.

5 Press the jog dial to determine the selection.
- The setting is confirmed.

Operating the video display using an external device [LAN terminal]

The video display supports Television Systems Ltd.'s "TSL UMD Protocol Ver. 5.0". You can operate the video display using an external device connected to the LAN terminal and display characters and tally lights on the screen. There are two tally lights, on the left and right. Up to 16 characters can be displayed.

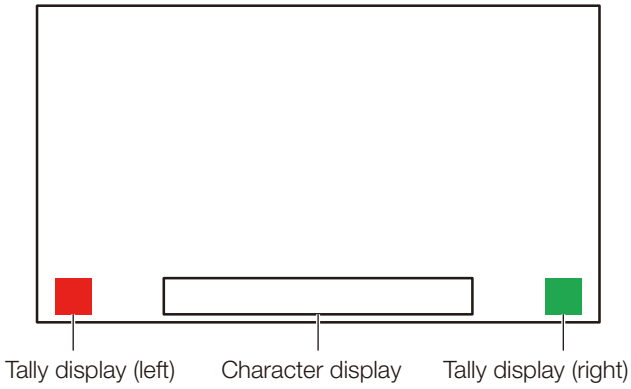

1 Connect an external control device to the LAN terminal.

2 Set [SCREEN] and [INDEX] to [0x0000] in the TSL Protocol settings.

3 Open the [In Monitor Display] menu.
MENU ➤ [Network/IMD Settings] ➤ [In Monitor Display]

4 Select [Control] ➤ [TSL Ver. 5.00] using the jog dial.
- This will allow operation from an external control device, and display characters and tally lights.

5 Select [Position] ➤ [Top] or [Bottom] using the jog dial.
- This sets the position where characters and tally lights will be displayed.

Note

- When [Multi View (Dual)] or [Multi View (Quad)] is displayed, set the [INDEX] setting to from [0x0001] to [0x0004].
- The port number for the controlling is fixed at "45000".
- With [In Monitor Display] you can also display user-selected characters on the screen. (102)

Operating the video display using an external device [USB terminal: Wi-Fi connection]

A Wi-Fi adapter can be connected to the USB terminal of the video display so that the video display can be connected to a portable terminal in the Wi-Fi network environment in use. The following two methods can be used to connect:
Infrastructure: This method connects to Wi-Fi via an access point.
Access Point: This device acts as an access point, and this method connects the device directly to the Wi-Fi device.

- Network settings such as IP address and subnet mask are acquired automatically.
- Supported encryption schemes
  Infrastructure: WEP64 (ASCII), WEP128 (ASCII), WPA-TKIP, WPA-AES (CCMP), WPA2-TKIP, WPA2-AES (CCMP)
  Access Point: WPA2-AES (CCMP)

CAUTION

- Note that we cannot accept any liability for damages that arise as a result of incorrect settings made on the network to use network functions and for damage that arise as a result of use of this function.
- Avoid connecting to Wi-Fi or network environments that are not protected by appropriate security measures. Remember to change the default password when setting the access point. Doing so may cause the customers' personal information or other important information to leak to a third party. When not using Wi-Fi, set [Wi-Fi] ➤ [Control] to [Off].
- The specifications and restrictions of Wi-Fi connection methods differ depending on the Wi-Fi network in use.
- There is no guarantee that the Wi-Fi adapter functions in use will work on the video display. For information about Wi-Fi adapter related defects, contact the device manufacturer. Also, in various countries and regions, approval is needed to use the Wi-Fi adapter, and use of non-approved Wi-Fi adapters is not permitted. If you are unclear of whether or not use is approved, check with the device manufacturer.

Note

- Refer to the Canon website for a list of supported devices (Wi-Fi adapters).
- For details on how to use the Wi-Fi adapter, precautions for use, how to set access points, and other information, either refer to the device Instruction Manual or contact the manufacturer.
- Up to 24 access points can be displayed and selected on the video display.

1 Connect the Wi-Fi adapter to the USB terminal.

2 Open the [Wi-Fi] menu.
  MENU ➤ [Network/IMD Settings] ➤ [Wi-Fi]

When using the [Infrastructure] method

3 Select [Control] ➤ [Infrastructure] using the jog dial.

4 Set the access point to connect to.

5 If a password is needed when connected to an access point, enter the password (📖101).
  - This is set using up to 24 alpha-numerical characters and symbols. The following characters can be entered.
    Alphanumeric characters: A to Z, a to z, 0 to 9
    Symbols: _ or -

When using the [Access Point] method

3 Select [Control] ❯ [Off] using the jog dial.

4 Select [Access Point] using the jog dial (📖101).
- Enter the SSID. This is set using up to 24 alpha-numerical characters and symbols.
- Sets the communication mode.
- Sets the channel.
- Enter the password. This is set using between 8 and 24 alpha-numerical characters and symbols.
- [SSID], [Password]: The following characters can be entered.
  Alphanumeric characters: A to Z, a to z, 0 to 9
  Symbols: _ or -

5 Select [Control] ❯ [Access Point] using the jog dial.

Use a web browser to remotely operate the video display

A web browser can be used to remotely operate the video display using a computer terminal connected to the LAN terminal or a portable terminal (📖43) connected via a Wi-Fi adapter to the USB terminal. From the device connected to the network, you can change image quality settings or switch channels.
This function checks operation using the following web browsers.

- Safari (Apple)
- Google Chrome (Google)

* Correct operation cannot be guaranteed on all supported OS or web browser editions.

CAUTION

- Remember to change the initial settings for ID and Password when using this function.

Note

- Access is only possible from a single terminal.
- This function may not work if the video display is accessed using LAN and a Wi-Fi adapter, at the same time.
- Opening multiple pages in multiple tabs on the web browser can cause it to not function properly.
- Executing [Capture] in the [View] screen can cause the video on this video display to pause temporarily.
- Operating the video display itself while it is being accessed from a web browser can cause the network connection to be lost.
- A delay may occur in video display or in the various settings depending on the network environment and communication conditions.
- The IP address can be checked in the [System Information] screen.
- The operation screen only displays English.

1 Connect external control devices via the network.

2 Open the [Web] menu.
MENU ➤ [Network/IMD Settings] ➤ [Web]

3 Select [Control] ➤ [On] using the jog dial.

4 Select [User ID] and [Password] using the jog dial (📖 101).
- [User ID]: Enter the user ID. This is set using up to 16 alpha-numerical characters and symbols.
  [Password]: Enter the password. This is set using between 8 and 16 alpha-numerical characters and symbols.
  The following characters can be entered.
  Alphanumeric characters: A to Z, a to z, 0 to 9
  Symbols: _ or -

5 Start up a web browser on the device connected to a network.

6 Enter the IP address of this video display in the address bar.
- The remote operation screen is displayed on the web browser.
- When the basic authentication screen is displayed, enter the user ID and password.

7 When operation ends, close the web browser.

■ Operation screen

[View] screen

After pressing one of the image capture buttons, the captured image will be displayed. You can also operate the CH buttons and F buttons (function/channel buttons).

Captured image

Image capture button

[Control] screen

Allows the Picture Mode, Channel, and various marker displays to be set.

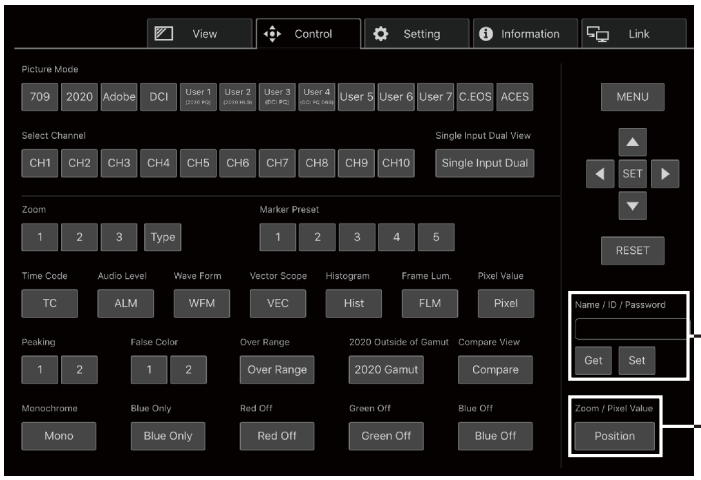

[Name / ID /Password]
Enter the text.
[Get]: Get the text data to be entered.
[Set]: Apply the text data to the text input screen.

[Zoom / Pixel Value]
Sets the display position for [Zoom] or the pixel position for [Pixel Value Check].

[Setting] screen

You can import LUT, export [Frame Luminance Monitor], and import or export this video display's settings.

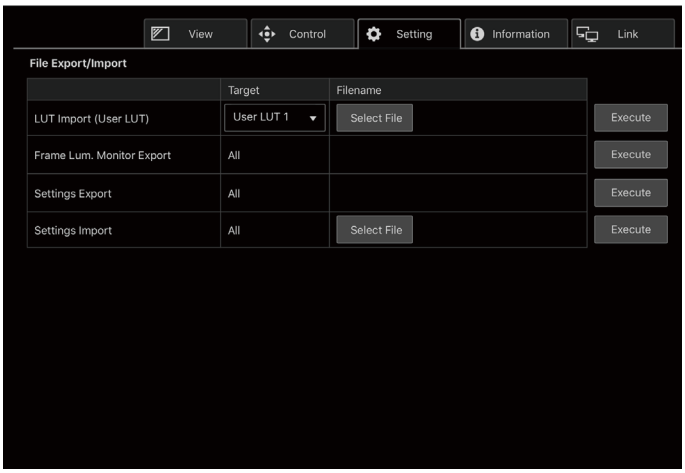

[LUT Import (User LUT)]
Imports a LUT. When the LUT import is completed, the setting of the imported LUT will be applied to the current [Picture Mode]'s [CDL/User LUT].

[Frame Lum. Monitor Export]
Exports [Frame Luminance Monitor]. Exporting [Frame Luminance Monitor] will create a "latest.csv" file for the luminance in the final screen and an "all.tar.gz" file (a file compressed using the tar.gz method) that contains all acquired luminance information.

[Information] screen

Displays the settings for [Adjustment] and [Channel Settings], and information for [Signal Information] and [System Information].

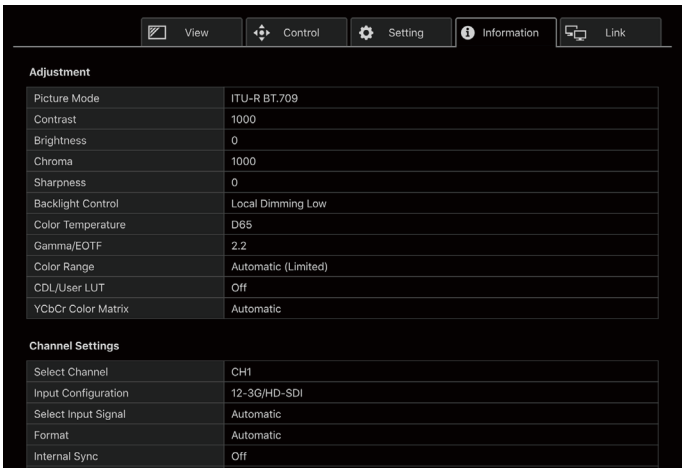

[Link] screen

You can display a list of the display connected via LAN to this video display, set [Display Setting Link], and change the display names.

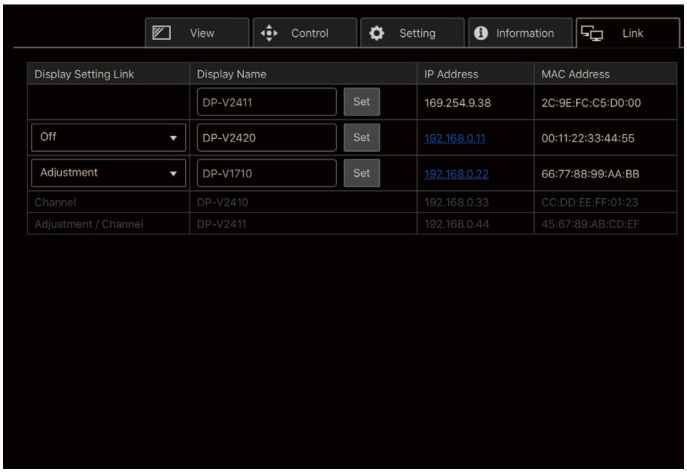

OSD Menu Index

Adjustment (📖53)

- Picture Mode
- Contrast
- Brightness
- Chroma
- Sharpness
- Backlight Control
- Color Temperature
- Color Gamut
- Gamma/EOTF
  - HDR Range
- Color Range
- Input Transform
- Output Transform
- Output Transform Surround
- CDL/User LUT
  - CDL/User LUT
  - Power
  - Saturation
  - Offset
  - Slope
  - CDL/User LUT Bypass
  - Detail Settings
    - CDL Export
    - CDL Import
    - CDL Preset Name
  - Anchor CDL
  - Reset CDL
- Detail Settings
  - Boost Contrast OPTION
  - LUT Import
  - LUT Name
  - LUT Delete
  - YCbCr Color Matrix
  - 2020 Constant Luminance
  - 2020 Gamut Mapping
  - Hybrid Log-Gamma System
  - HDR/SDR View
  - Calibration
  - HDMI Link
  - Copy Picture Mode
  - Picture Mode Name
- Anchor Adjustment
- Reset

Channel Settings (📖69)

- Select Channel
- Input Configuration
- Select Input Signal
- Image Division
- Link Order
- Format
- Audio Input
- Marker/TC/CameraInfo Input
- Internal Sync
- Channel Name
- Picture Mode
- Single Input Dual View
- Separator

Display Settings (📖74)

- Screen Scaling
- Anamorphic
- Scaling Method
- Video Position (Multi View)
- Zoom
  - Zoom Preset
  - Magnification
  - Position
  - Type
- Frame Hold
- I/PsF
- PsF
- I/P Conversion
- Film Cadence

Audio Settings (📖78)

- SDI Group
- CH L/R (SDI)
- CH L/R (HDMI)
- Volume
- Audio Switch

Marker Settings (📖79)

- Marker Preset
- Aspect Marker
  - Enable
  - Mask
  - Aspect Ratio
  - Line
  - Line Width
  - Line Color
  - Line Brightness
  - H Position
  - V Position
- Safety Zone Marker 1, 2
  - Enable
  - Aspect Ratio
  - Area Size
    - Rate (%)
    - Width (dot)
    - Height (dot)
  - Shape
  - Line Width
  - Line Color
  - Line Brightness
  - H Position
  - V Position
- Area Marker
  - Enable
  - H Position
  - V Position
  - Width (dot)
  - Height (dot)
  - Mask
  - Line
  - Line Width
  - Line Color
  - Line Brightness
- Center Marker
  - Enable
  - Size
  - Line Width
  - Line Color
  - Line Brightness
- Grid Marker
  - Enable
  - Distance
  - Line Width
  - Line Color
  - Line Brightness

Function Settings (📖84)

- Time Code
  - Enable
  - Type
  - Size
  - Position
  - H Offset
  - Type String Display
  - Brightness
- Audio Level Meter
  - Enable
  - Channel Number (SDI)
  - Channel Number (HDMI)
  - Size
  - Peak Hold
  - Reference Level
  - Brightness
- Wave Form Monitor
  - Enable
  - Select Signal
  - Display Type
    - Select Line
  - Scale
  - Reference Line
  - Reference Level
    - Reference Level High
    - Reference Level Low
  - Color
  - Brightness OPTION
  - Position
  - Size
- Vector Scope
  - Enable
  - Target
  - Position
  - Size
- Histogram
  - Enable
  - Color
  - Gain
  - HDR Range
  - HDR/SDR Ratio
  - Peak/Ave. Luminance
  - Size
- Frame Luminance Monitor
  - Enable
  - Display
  - Luminance Graph Settings
  - HDR/SDR Ratio Graph Settings
  - Size
  - Reset
  - Export
- Pixel Value Check
  - Enable
  - H Position
  - V Position
  - Reset Position
- Test Pattern
- Signal Monitoring
  - Control
  - Error Hold
  - No Signal/Unsupported Signal
  - 2SI Link Order
  - V1711 SDI CRC Error
  - V1711 8K 2SI Format
  - V1711 8K 2SI Switching
  - Error Log
- Screen Capture
  - Capture
  - Frame Hold
  - Capture Source
  - File Type
  - Create HDR/SDR Compare File
  - Playback File
  - Finish Playback File

- Camera Link
  - Automatic Adjustment (CINEMA EOS)
    - Color Gamut/Gamma/EOTF
    - Color Temperature
    - Display Color Gamut
  - Automatic Adjustment (ARRI)
    - User LUT
  - Automatic Adjustment (VARICAM)
    - User LUT
  - Anamorphic
  - Area Marker
  - Tally
  - Fan
  - Camera Information

Picture Function Settings (📖97)

- Peaking
  - Enable
  - Monochrome
  - Frequency
  - Range
  - Color
- False Color
  - Enable
  - Type
  - HDR/SDR Border
  - Range - SDR
  - Range - HDR
- Over Range
  - Enable
  - Range (HDR/SDR)
- 2020 Outside of Gamut View
  - Enable
  - Color Gamut
  - Range
- Monochrome
- Blue Only
- Red Off
- Green Off
- Blue Off
- Compare View
  - Enable
  - Type
  - HDR/SDR Convert Method
    - Contrast (SDR)
    - Color Temperature (SDR)
    - Gain (SDR)
  - User LUT Target 1
  - V1711 User LUT Target 2 (Quad)
  - V1711 User LUT Target 3 (Quad)

Network/IMD Settings (📖101)

- LAN
- Wi-Fi
- Web
- Display Setting Link
- In Monitor Display

System Settings (📖103)

- Function/Channel Button
  - Display Function
  - Display Function (CDL)
  - Display Channel
- Remote(GPI)
- Language
- Date/Time
- Display Name
- OSD Settings
  - Banner
  - Function Button Guide
  - OSD Brightness OPTION
- Protect Settings
  - Password
  - Protect Target
  - Protect
- Power Indicator/Button LED Settings
  - Power Indicator Brightness
  - Display Button LED
  - Button Name Lighting Time (sec.)
- Fan Settings
  - Fan Control
  - Fan Stop
- Compatible Settings
  - HDMI
  - Color Range
  - Backlight Control
  - Reduce Backlight Flash
  - V1711 User LUT
- Firmware / License Update
- Export/Import
- Power on Setting
- Reset All Settings

Signal Information (📖110)

System Information (📖110)

Adjustment

This menu is used to adjust the image quality and perform calibration. The factory defaults differ according to the [Picture Mode] setting. (📖66)

Sub Menu	Setting Options (Bold: factory default)	
Picture Mode	SMPTE-C EBU **ITU-R BT.709** ITU-R BT.2020 Adobe RGB DCI-P3 User 1 (2020 PQ) User 2 (2020 HLG) User 3 (DCI PQ) User 4 (DCI PQ D65) User 5 ~ User 7 CINEMA EOS SYSTEM ACESproxy (ver. 1.0.1)[1]	Select a preset mode. [SMPTE-C], [EBU], [ITU-R BT.709], [ITU-R BT.2020], [Adobe RGB], [DCI-P3]: Mode set to the brightness, color temperature, gamma/EOTF, and color gamut of the three primary colors chromaticity points of each standard. [User 1–7] (User 1 (2020 PQ), User 2 (2020 HLG), User 3 (DCI PQ), User 4 (DCI PQ D65), User 5 ~ User 7): This mode allows you to set each item in [Adjustment] individually. You can change the mode name within 24 one-byte characters including alphabetical characters, numbers, and symbols (📖62). [CINEMA EOS SYSTEM]: Canon Log is the ideal mode for displaying images captured with Cinema EOS cameras. Using Camera Link, you can have the image quality setting change automatically ([Automatic Adjustment (CINEMA EOS)] 📖91). [ACESproxy (ver. 1.0.1)]: A mode to display ACESproxy videos in optimum gamma/EOTF and color gamut.
Contrast[2]	0 to 3000 OPTION When [Boost Contrast] ➤ [On] 0 to 6000	Adjusts the white level of the image. (Increments of 1) • OPTION When [Boost Contrast] is [On], [Contrast [BOOST]] is displayed. • When using DC power, the upper limit of the setting value is [1000] when [Backlight Control] is set to [Local Dimming Low/High].
Brightness	-500 to 500 (**0**)	Adjusts the black level of the image. (Increments of 1)
Chroma[3]	0 to 2000 (**1000**)	Adjusts the color saturation of the image (color depth). (Increments of 1)
Sharpness	0 to 100 (**0**)	Adjusts the sharpness of the image. (Increments of 1)
Backlight Control[4]	Local Dimming High Local Dimming Low Off OPTION When [Boost Contrast] ➤ [On] Global Dimming Off	Switches the backlight control method. [Local Dimming High, Low]: Local dimming technology controls the amount of light emitted by the backlight for each display area. The backlight of bright area is increased and the dark area is decreased according to the displayed content. OPTION When [Local Dimming High/Low] is selected and [Boost Contrast] is set to [On], it turns to [Global Dimming]. [Global Dimming]: Global dimming is the ability to control the amount of light emitted by the backlight on the entire screen. If the image is dark, the whole display is darkened.

Sub Menu	Setting Options (Bold: factory default)	
Color Temperature[5]	D93, D65, D65 Custom, D61, D60, D56, D50, DCI-P3 Custom (xy), Off • When a preset is selected Gain R/G/B: 0 to **1023** Bias R/G/B: -500 to 500 (**0**) • When Custom (xy) is selected x: 0.260 to 0.360 y: 0.260 to 0.360	Sets the color temperature. (📖28) [D93], [D65], [D61], [D60], [D56], [D50], [DCI-P3]: Select from preset color temperatures. [D65 Custom]: This preset is for adjusting the color of the video display and displays having different display characteristics. The gain and bias are adjusted based on D65. [Gain R/G/B], [Bias R/G/B]: Adjusts the preset color temperature. (Increments of 1) [Custom (xy)]: Adjusts CIE x and y. (Increments of 0.001)
Color Gamut[6]	SMPTE-C EBU ITU-R BT.709 ITU-R BT.2020 Adobe RGB DCI-P3 Native Cinema Gamut to 709 Cinema Gamut to 2020 Cinema Gamut to DCI DCI-P3+ to 709 DCI-P3+ to DCI S-Gamut3 to 709 S-Gamut3 to 2020 S-Gamut3 to DCI S-Gamut3.Cine to 709 S-Gamut3.Cine to 2020 S-Gamut3.Cine to DCI Gamut LUT 1 to Gamut LUT 8	Sets the color range. When [Picture Mode] ❯ [User 1–7] or [CINEMA EOS SYSTEM] [SMPTE-C], [EBU], [ITU-R BT.709], [ITU-R BT.2020], [Adobe RGB], [DCI-P3]: Color gamut compliant to each standard. [Native]: Color gamut that can be displayed by this video display. [Cinema Gamut to 709], [Cinema Gamut to 2020], [Cinema Gamut to DCI], [DCI-P3+ to 709], [DCI-P3+ to DCI]: Modes where the color gamut is converted to monitor Cinema Gamut and DCI-P3+ videos recorded by the Cinema EOS cameras. [S-Gamut3 to 709], [S-Gamut3 to 2020], [S-Gamut3 to DCI], [S-Gamut3.Cine to 709], [S-Gamut3.Cine to 2020], [S-Gamut3.Cine to DCI]: Preset modes where the color gamut is converted. [Gamut LUT 1] to [Gamut LUT 8]: Selects an external LUT.

Sub Menu	Setting Options (Bold: factory default)	
Gamma/EOTF[7]	1.0, 2.2, 2.35, 2.4, 2.6, ITU-R BT.1886 SMPTE ST 2084 (PQ) Hybrid Log-Gamma Hybrid Log-Gamma RGB Canon Log Canon Log (HDR) Canon Log 2 Canon Log 2 (HDR) Canon Log 3 Canon Log 3 (HDR) S-Log2 (HDR) S-Log3 (HDR) Gamma LUT 1 to Gamma LUT 8 Off	Sets the Gamma/EOTF. [1.0], [2.2], [2.35], [2.4], [2.6], [ITU-R BT.1886], [Canon Log], [Canon Log 2], [Canon Log 3], [S-Log2 (HDR)], [S-Log3 (HDR)]: Select the preset gamma. [SMPTE ST 2084 (PQ)], [Hybrid Log-Gamma], [Hybrid Log-Gamma RGB], [Canon Log (HDR)], [Canon Log 2 (HDR)], [Canon Log 3 (HDR)]: Select the gamma/EOTF for HDR display. [Gamma LUT 1] to [Gamma LUT 8]: Selects an external LUT. ❖ About [Hybrid Log-Gamma] This video display supports the following two methods. [Hybrid Log-Gamma]: This method processes the system gamma for the Y signal (Compliant with ITU-R BT.2100). [Hybrid Log-Gamma RGB]: This method processes the system gamma for the RGB signal. If using [Hybrid Log-Gamma] then the system gamma value will be displayed in the [Setting Options] on the menu screen.

Sub Menu	Setting Options (Bold: factory default)	
HDR Range	Sets the display method when Gamma/EOTF for HDR display is selected.	
SMPTE ST 2084 (PQ)	100 to 10000 (**1000**)	Sets the [SMPTE ST 2084 (PQ)] dynamic range to be displayed, from 0.005 to 10,000 cd/m^2 (nits). (100 to 4000: 100 increments. 4000 to 10000: 1000 increments)
Hybrid Log-Gamma	100 to **1000**	Sets how far to display the [Hybrid Log-Gamma] dynamic range. (in increments of 100) The upper limit value will change to match the settings of [Hybrid Log-Gamma System]. (📖60)
Hybrid Log-Gamma RGB	100 to **1000**/2000	
Canon Log (HDR)	100 to **800**	Sets the [Canon Log] dynamic range to be displayed, from 0 to 800%. (in 100 increments)
Canon Log 2 (HDR)	100 to **1600**	Sets the [Canon Log 2] dynamic range to be displayed, from 0 to 1600%. (in 100 increments)
Canon Log 3 (HDR)	100 to **1600**	Sets the [Canon Log 3] dynamic range to be displayed, from 0 to 1600%. (in 100 increments)
S-Log2 (HDR)	100 to 1400 (**1000**)	Sets how far to display the [S-Log] dynamic range. (in 100 increments)
S-Log3 (HDR)	100 to 3900 (**1000**)	
Gamma LUT 1 to Gamma LUT 8	512 to **1023**	Sets how far to display the 10-bit LUT data dynamic range, from 0 to 1023. (in 1 increments)

❖ Setting procedures

The procedures below use Canon Log (HDR) as an example.

When the maximum value (800) is specified, the 800% dynamic range of Canon Log is assigned to the dynamic range of the video display. Although the brightness in appearance lowers, you can check the dynamic range included in video signals.

When [300] is specified, the part exceeding 300% of Canon Log is clipped (gradation is saturated) and the part up to 300% is assigned to the dynamic range of the video display.

The brightness of the video display corresponds to the value set for Contrast.

Canon Log 800% signal
(Contrast: [3000])

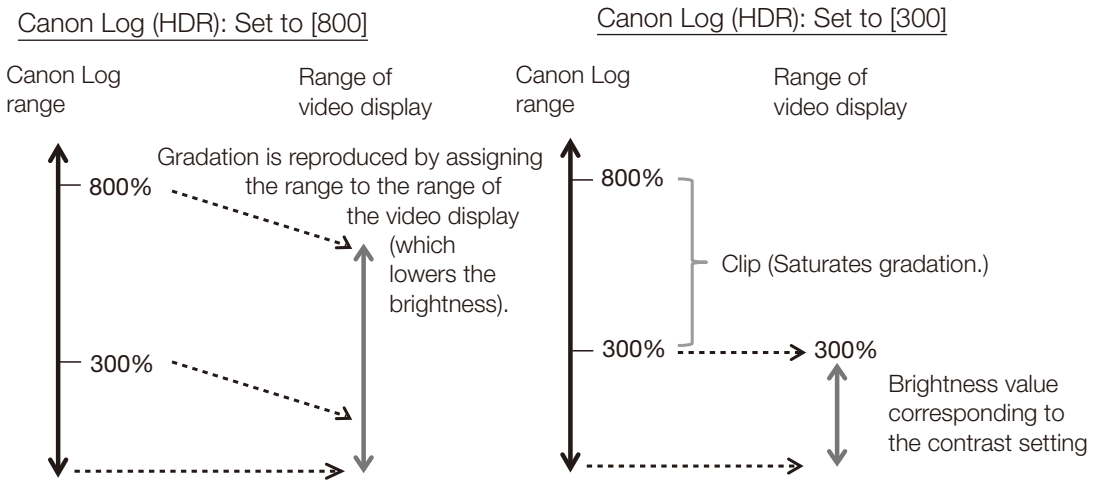

Sub Menu	Setting Options (Bold: factory default)	
Color Range[8]	**Automatic** Full SDI Full (4-1019) Limited When [Color Range] ➤ [Compatible] (📖105) **Automatic** Full (0-1023) SDI Full (4-1019) Limited 1 (64-940) Limited 2 (64-1023)	Sets the quantization range. [Automatic]: Sets the range based on signal information automatically.
Input Transform	Automatic Off	When [Picture Mode] ➤ [ACESproxy (ver. 1.0.1)] Sets whether to apply ACES Input Transform to the [3G-SDI RAW] signal (📖69). [Automatic]: Applied automatically. [Off]: Not applied.
Output Transform	ITU-R BT.709 ITU-R BT.2020 DCI-P3	When [Picture Mode] ➤ [ACESproxy (ver. 1.0.1)] Displayed instead of [Gamma/EOTF] or [Color Gamut]. [ITU-R BT.709], [ITU-R BT.2020], [DCI-P3]: ACESproxy is converted into respective mode.
Output Transform Surround	Dim Surround Dark Surround	When [Picture Mode] ➤ [ACESproxy (ver. 1.0.1)] Displayed instead of [Gamma/EOTF] or [Color Gamut]. [Dim Surround]: Enables Dim Surround process specified by ACESproxy. [Dark Surround]: Enables Dark Surround process specified by ACESproxy.

Sub Menu	Setting Options (Bold: factory default)	
CDL/User LUT[9]	Configures settings for CDL or User LUT.	
CDL/User LUT	CDL 1 to CDL 8 **User LUT 1** to User LUT 8 **Off** Only when [Picture Mode] is [User 1-7] ARRI (Rec2100-PQ-1K-100) ARRI (Rec2100-HLG-1K-200) VARICAM (V-Log to V-709) 2020 PQ to 2020 SDR 2020 PQ to 709 SDR 2020 HLG to 709 HLG 2020 HLG to 709 SDR	Select a preset such as CDL or external LUT.
Power	0.50 to 4.00 (**1.00**)	Adjusts the Gamma of the image. (0.01 increments)
Saturation	0.000 to 2.000 (**1.000**)	Adjusts the color saturation of the image. (0.001 increments)
Offset	-1.000 to 1.000 (**0.000**)	Adjusts the black level of the image. (0.001 increments)
Slope	0.000 to 2.000 (**1.000**)	Adjusts the white level of the image. (0.001 increments)
CDL/User LUT Bypass	On, **Off**	[CDL]: When set to [On], you can temporarily disable the CDL adjustment result and return to previously set image quality. [User LUT]: When set to [On], you can return to the image quality before user LUT was applied.
Detail Settings		
CDL Export		Exports CDL parameters.
CDL Preset	CDL 1 to CDL 15 All	
File Type	CCC CDL	
Execute		
CDL Import		Imports CDL parameters.
Filename		
CDL Preset	CDL 1 to CDL 8	
Execute		
CDL Preset Name		You can specify the name of preset mode within 16 one-byte characters including alphabetical characters, numbers, and symbols.
Anchor CDL		You can temporarily save parameters for [Power], [Saturation], [Offset], and [Slope] and recover the values. (anchor point setting)
Reset CDL		Resets CDL parameters.

Sub Menu	Setting Options (Bold: factory default)	
Detail Settings ❯	Sets details for Picture Mode.	
OPTION Boost Contrast[10]	On **Off**	You can increase the brightness (When AC power is used). The upper limit for [Contrast] and the [Backlight Control] settings vary depending on the [Boost Contrast] settings. [On]: The settings for [Contrast] are from 0 to 6000. When [Backlight Control] is [Local Dimming High/Low] and [Boost Contrast] is set to [On], it turns to [Global Dimming]. [Off]: The settings for [Contrast] are from 0 to 3000.
LUT Import	You can import LUT. File names that can be imported can be up to 48 one-byte characters, including alphabetical characters, numbers, and symbols (including file extensions).	
Filename		Select a filename.
LUT Type	**User LUT** Gamma LUT Gamut LUT	Select the LUT type.
Select LUT	User LUT 1-8 Gamma LUT 1-8 Gamut LUT 1-8	
Base Color Gamut	SMPTE-C EBU **ITU-R BT.709** Adobe RGB DCI-P3 Native	When [LUT Type] ❯ [Gamut LUT] Selects the color gamut used when creating the LUT.
Execute		Performs import.
LUT Name	You can specify the name of LUT within one-byte 24 characters including alphabetical characters, numbers, and symbols.	
LUT Type	**User LUT** Gamma LUT Gamut LUT	Select the LUT type.
Select LUT	User LUT 1-8 Gamma LUT 1-8 Gamut LUT 1-8	
Input Name		Input the LUT name.
LUT Delete	Deletes imported LUT.	
LUT Type	**User LUT** Gamma LUT Gamut LUT	Select the LUT type.
Select LUT	User LUT 1-8 Gamma LUT 1-8 Gamut LUT 1-8	
Delete		Deletes LUT.

Sub Menu	Setting Options (Bold: factory default)	
YCbCr Color Matrix	**Automatic** ITU-R BT.709 ITU-R BT.2020	Sets the matrix conversion method for input signals in YCbCr format. [Automatic]: Matrix coefficient is set in conformance with the ITU-R BT.2020 standard when the [Picture Mode] or [Color Gamut] setting is [ITU-R BT.2020] and in conformance with the ITU-R BT.709 standard otherwise. [ITU-R BT.709]: Matrix coefficient is set in conformance with the ITU-R BT.709 standard. [ITU-R BT.2020]: Matrix coefficient is set in conformance with the ITU-R BT.2020 standard.
2020 Constant Luminance[11]	Constant Luminance **Non-constant Luminance**	When [Picture Mode] or [Color Gamut] ➤ [ITU-R BT.2020] Sets the color matrix conversion method. [Constant Luminance]: YUV signals are linearly converted and then converted into RGB signals. [Non-constant Luminance]: YUV signals are converted into RGB signals without changing gamma 0.45.
2020 Gamut Mapping	Gamut Mapping **Clipping**	When [Picture Mode] or [Color Gamut] ➤ [ITU-R BT.2020] [Gamut Mapping]: Mapping is performed on colors outside the native color gamut by Canon's unique method. [Clipping]: Colors outside the native color gamut are clipped by a general method.
Hybrid Log-Gamma System	Automatic **Manual** • When Manual is selected [Gamma/EOTF] ➤ When [Hybrid Log-Gamma] 1.000 to 1.500 (**1.200**) When [Hybrid Log-Gamma RGB] **γ1.2 - 1000 cd/m²** γ1.2 - 2000 cd/m²	When [Gamma/EOTF] ➤ [Hybrid Log-Gamma] or [Hybrid Log-Gamma RGB] Sets the system gamma or peak luminance. [Automatic]: When [Hybrid Log-Gamma] is selected, it adjusts the system gamma automatically to match the contrast value. It cannot be set when [Hybrid Log-Gamma RGB] is selected. [Manual]: Operations for when [Hybrid Log-Gamma] or [Hybrid Log-Gamma RGB] is selected are as follows: [Hybrid Log-Gamma]: Adjusts the system gamma. (Increments of 0.005) [Hybrid Log-Gamma RGB]: Sets the peak luminance. The maximum value for each setting becomes the upper limit value of [HDR Range].
HDR/SDR View[12]	On, Off	The HDR (High Dynamic Range) and SDR (Standard Dynamic Range) displays can be compared. [On]: The right screen is displayed at SDR luminance. [Off]: Does not compare the HDR and SDR display.

Sub Menu	Setting Options (Bold: factory default)	
Calibration[13]	When [Picture Mode] ➤ [User 1–7] Executes calibration based on set target values.	
Luminance	48 to 300 (**100**) cd/m^2	Sets the target luminance.
Color Temperature	D93, **D65**, D61, D60, D56, D50, DCI-P3 Custom (xy) • When Custom (xy) is selected x: 0.260 to 0.360 (**0.313**) y: 0.260 to 0.360 (**0.329**)	Sets the target color temperature. [D93], [D65], [D61], [D60], [D56], [D50], [DCI-P3]: Select from preset color temperatures. [Custom (xy)]: Adjusts CIE x and y. (Increments of 0.001)
Color Gamut	SMPTE-C EBU **ITU-R BT.709** ITU-R BT.2020 Adobe RGB DCI-P3	Sets the color gamut.
Gamma	**2.2**, 2.35, 2.4, 2.6, ITU-R BT.1886	Sets the target gamma.
Start		Performs calibration.
HDMI Link[14]	When [Picture Mode] ➤ [User 1–7] Video is displayed at the image quality linked to the video image quality setting using the HDMI metadata.	
Automatic Adjustment	On, **Off**	
Color Gamut/Gamma/EOTF	**On**, Off	Matches the [Color Gamut] and [Gamma/EOTF] settings of the video display with the HDMI metadata.
Contrast/HDR Range	**On**, Off	Matches the [Contrast], [HDR Range], and OPTION [Boost Contrast] setting of the video display with the HDMI metadata.
Copy Picture Mode[15]	When [Picture Mode] ➤ [User 1–7] Copy the Picture Mode settings.	
Picture Mode (Copy from)	SMPTE-C EBU **ITU-R BT.709** ITU-R BT.2020 Adobe RGB DCI-P3 User 1 (2020 PQ) User 2 (2020 HLG) User 3 (DCI PQ) User 4 (DCI PQ D65) User 5 ~ User 7	Select "Picture Mode (Copy from)". [User 1–7]: Select from other than the currently set mode.
Execute		Performs copy.

Sub Menu	Setting Options (Bold: factory default)	
Picture Mode Name		You can change the name of [User 1–7] within 24 characters including alphabetical characters, numbers, and symbols.
Anchor Adjustment	OK **Cancel**	Temporarily saves parameters for adjusting [Contrast], [Brightness], [Chroma], [Sharpness], and [HDR Range] and recover the values (anchor point setting). [OK]: Performs anchor point setting. [Cancel]: Returns to the previous screen without setting anchor point.
Reset	OK **Cancel**	Return [Picture Mode] to factory default. Note that in [User 1–7] mode where you are performing calibration, the setting returns to the value after calibration instead of the factory default. When selected, the message [Reset Adjustment settings to defaults?] appears. [OK]: Performs reset. [Cancel]: Returns to the previous screen without resetting.

[1] [ACESproxy (ver. 1.0.1)] cannot be set when [Channel Settings] ➤ [Picture Mode] ➤ [Type] are [L/R], [4K/2K] or [Automatic].

[2] When [Channel Settings] ➤ [Picture Mode] ➤ [Type] is [L/R], [Contrast] cannot be adjusted at the [Picture Mode] setting for the right screen. The right screen's setting will be the same as set for the left screen.

[3] Can only be adjusted when [CDL/User LUT] is [CDL 1-8] or [Off].

[4]
- When [Global Dimming] is selected, the contrast may change temporarily in order to maintain gradation depending on the image. If this is undesirable, turn it [Off] and see if it improves.
- When [Channel Settings] ➤ [Picture Mode] ➤ [Type] is [L/R], [Backlight Control] cannot be set at the [Picture Mode] setting for the right screen. The right screen's setting will be the same as set for the left screen.

[5]
- [Custom (xy)] and [Gain R/G/B] or [Bias R/G/B] cannot be selected at the same time.
- When [Gain R/G/B] or [Bias R/G/B] value is adjusted, an asterisk [*] is displayed by color temperature preset mode.
- The displayed color coordinates (x, y) are just a guide and not guaranteed absolute values.

[6]
- [Color Gamut] cannot be set in the following cases.
  - When [CDL/User LUT] ➤ [ARRI (Rec2100-PQ-1K-100)], [ARRI (Rec2100-HLG-1K-200)], [VARICAM (V-Log to V-709)], [2020 PQ to 2020 SDR], [2020 PQ to 709 SDR], [2020 HLG to 709 HLG] or [2020 HLG to 709 SDR] is selected.
- For checking the video captured with Cinema EOS cameras, please refer to the "Parameter of Cinema EOS cameras and video display (📖95)".

7
- Not settable in the following cases:
  - When [ACESproxy (ver. 1.0.1)] is selected in [Picture Mode]
  - When [CDL/User LUT] ➤ [ARRI (Rec2100-PQ-1K-100)], [ARRI (Rec2100-HLG-1K-200)], [VARICAM (V-Log to V-709)], [2020 PQ to 2020 SDR], [2020 PQ to 709 SDR], [2020 HLG to 709 SDR] is selected.
- For checking the captured video with Cinema EOS cameras and ARRI / Panasonic cinema cameras, please refer to [Camera Link] ➤ [Automatic Adjustment] (📖91).
- The relationship between [Color Gamut] and [Gamma/EOTF] that can be selected is shown below. When [Color Gamut] is changed, [Gamma/EOTF] is changed to the underlined value (default value) when the current [Gamma/EOTF] settings are not selectable.

Picture Mode	Color Gamut	Selectable Gamma/EOTF
SMPTE-C	Cannot be selected	Off, 1.0, 2.2, 2.35, 2.4, 2.6, ITU-R BT.1886, SMPTE ST 2084 (PQ), Canon Log, Canon Log (HDR), Gamma LUT 1 to Gamma LUT 8
EBU		Off, 1.0, 2.2, 2.35, 2.4, 2.6, ITU-R BT.1886, SMPTE ST 2084 (PQ), Canon Log, Canon Log (HDR), Gamma LUT 1 to Gamma LUT 8
ITU-R BT.709, ITU-R BT.2020		Off, 1.0, 2.2, 2.35, 2.4, 2.6, ITU-R BT.1886, SMPTE ST 2084 (PQ), Hybrid Log-Gamma, Hybrid Log-Gamma RGB, Canon Log, Canon Log (HDR), Canon Log 2, Canon Log 2 (HDR), Canon Log 3, Canon Log 3 (HDR), S-Log2 (HDR), S-Log3 (HDR), Gamma LUT 1 to Gamma LUT 8
Adobe RGB		Off, 1.0, 2.2, 2.35, 2.4, 2.6, ITU-R BT.1886, Gamma LUT 1 to Gamma LUT 8
DCI-P3		Off, 1.0, 2.2, 2.35, 2.4, 2.6, ITU-R BT.1886, SMPTE ST 2084 (PQ), Canon Log, Canon Log (HDR), Canon Log 2, Canon Log 2 (HDR), Canon Log 3, Canon Log 3 (HDR), S-Log2 (HDR), S-Log3 (HDR), Gamma LUT 1 to Gamma LUT 8
CINEMA EOS SYSTEM, User 1-7	SMPTE-C	Off, 1.0, 2.2, 2.35, 2.4, 2.6, ITU-R BT.1886, SMPTE ST 2084 (PQ), Canon Log, Canon Log (HDR), Gamma LUT 1 to Gamma LUT 8
	EBU	Off, 1.0, 2.2, 2.35, 2.4, 2.6, ITU-R BT.1886, SMPTE ST 2084 (PQ), Canon Log, Canon Log (HDR), Gamma LUT 1 to Gamma LUT 8
	ITU-R BT.709, ITU-R BT.2020	Off, 1.0, 2.2, 2.35, 2.4, 2.6, ITU-R BT.1886, SMPTE ST 2084 (PQ), Hybrid Log-Gamma, Hybrid Log-Gamma RGB, Canon Log, Canon Log (HDR), Canon Log 2, Canon Log 2 (HDR), Canon Log 3, Canon Log 3 (HDR), S-Log2 (HDR), S-Log3 (HDR), Gamma LUT 1 to Gamma LUT 8
	Adobe RGB	Off, 1.0, 2.2, 2.35, 2.4, 2.6, ITU-R BT.1886, Gamma LUT 1 to Gamma LUT 8
	DCI-P3	Off, 1.0, 2.2, 2.35, 2.4, 2.6, ITU-R BT.1886, SMPTE ST 2084 (PQ), Canon Log, Canon Log (HDR), Canon Log 2, Canon Log 2 (HDR), Canon Log 3, Canon Log 3 (HDR), S-Log2 (HDR), S-Log3 (HDR), Gamma LUT 1 to Gamma LUT 8
	Native	Off, 1.0, 2.2, 2.35, 2.4, 2.6, ITU-R BT.1886, SMPTE ST 2084 (PQ), Gamma LUT 1 to Gamma LUT 8
	Cinema Gamut to 709, Cinema Gamut to 2020	2.2, Canon Log, Canon Log (HDR), Canon Log 2, Canon Log 2 (HDR), Canon Log 3, Canon Log 3 (HDR)
	Cinema Gamut to DCI	Canon Log, Canon Log (HDR), Canon Log 2, Canon Log 2 (HDR), Canon Log 3, Canon Log 3 (HDR)
	DCI-P3+ to 709, DCI-P3+ to DCI	Canon Log, Canon Log (HDR)
	S-Gamut3 to 709 S-Gamut3 to 2020 S-Gamut3.Cine to 709 S-Gamut3.Cine to 2020	Off, 1.0, 2.2, 2.35, 2.4, 2.6, ITU-R BT.1886, SMPTE ST 2084 (PQ), Hybrid Log-Gamma, Hybrid Log-Gamma RGB, S-Log2 (HDR), S-Log3 (HDR), Gamma LUT 1 to Gamma LUT 8
	S-Gamut3 to DCI S-Gamut3.Cine to DCI	Off, 1.0, 2.2, 2.35, 2.4, 2.6, ITU-R BT.1886, SMPTE ST 2084 (PQ), S-Log2 (HDR), S-Log3 (HDR), Gamma LUT 1 to Gamma LUT 8
	Gamut LUT 1 to Gamut LUT 8	Off, 1.0, 2.2, 2.35, 2.4, 2.6, ITU-R BT.1886, Gamma LUT 1 to Gamma LUT 8

8
- Setting is disabled when [ACESproxy (ver. 1.0.1)] is selected for [Picture Mode].
- Operations when [Automatic] is selected are described below.
  - It is set in accordance with the settings if Color Range settings are included in the camera metadata. When there is [Full Range] metadata in Payload when SDI is selected, it will be set to [SDI Full].
  - When HDMI is selected, [Full] or [Limited] ([Full (0-1023)] or [Limited 1 (64-940)]) is set automatically depending on HDMI signal information.
  - When SDI is selected, the setting is configured according to the settings for [Picture Mode], [Color Gamut], and [Gamma/EOTF].

<table>
<tr><th rowspan="3"></th><th rowspan="3">Setting Options</th><th colspan="2">Color Range to be Set</th></tr>
<tr><th colspan="2">[System Settings] ➤ [Compatible Settings] ➤ [Color Range]</th></tr>
<tr><th>When [Normal]</th><th>When [Compatible]</th></tr>
<tr><td>Picture Mode</td><td>DCI-P3</td><td rowspan="10">Full</td><td rowspan="10">Full (0-1023)</td></tr>
<tr><td rowspan="3">Color Gamut</td><td>DCI-P3</td></tr>
<tr><td>Cinema Gamut to DCI</td></tr>
<tr><td>DCI-P3+ to DCI</td></tr>
<tr><td rowspan="7">Gamma/EOTF</td><td>Canon Log (HDR)</td></tr>
<tr><td>Canon Log 2 (HDR)</td></tr>
<tr><td>Canon Log 3 (HDR)</td></tr>
<tr><td>S-Log2 (HDR)</td></tr>
<tr><td>S-Log3 (HDR)</td></tr>
<tr><td>Canon Log</td><td rowspan="4">Limited</td><td rowspan="3">Limited 2 (64-1023)</td></tr>
<tr><td>Canon Log 2</td></tr>
<tr><td>Canon Log 3</td></tr>
<tr><td colspan="2">Other than the above</td><td>Limited 1 (64-940)</td></tr>
</table>

- Operations when [Format] is set to [ICtCp] are described below.
  - When [Color Range] is set to other than [Full], [Wave Form Monitor] will display only a signal set with [Color Range].
  - If [Channel Settings] ➤ [Picture Mode] ➤ [Type] is [L/R], the right screen's [Color Range] setting for the following will be the same as set for the left screen:
    - When displaying a single terminal's input in full-screen
    - When displaying "2 Sample Interleave" or "Dual Link 3G-SDI" signals

9
- When a setting other than [CDL 1-8] is selected, the following functions cannot be set.
  - [Power], [Saturation], [Offset], [Slope], [Detail Settings], [Anchor CDL], [Reset CDL].
- When [ARRI (Rec2100-PQ-1K-100)] is selected, [HDR Range] ➤ [SMPTE ST 2084 (PQ)] settings become [1000].
- When [ARRI (Rec2100-HLG-1K-200)] is selected, [HDR Range] ➤ [Hybrid Log-Gamma] settings become [1000].
- Depending on the [User LUT] settings, [Color Gamut] and [Gamma/EOTF] will be the same as set below.

User LUT	Color Gamut	Gamma/EOTF
ARRI (Rec2100-PQ-1K-100)	ITU-R BT.2020	SMPTE ST 2084 (PQ)
ARRI (Rec2100-HLG-1K-200)	ITU-R BT.2020	Hybrid Log-Gamma
VARICAM (V-Log to V-709)	ITU-R BT.709	2.2
2020 PQ to 2020 SDR	ITU-R BT.2020	2.4
2020 PQ to 709 SDR	ITU-R BT.709	
2020 HLG to 709 HLG	ITU-R BT.709	–
2020 HLG to 709 SDR	ITU-R BT.709	2.4

- [CDL/User LUT Bypass]: Fixed at [Off] when [Picture Function Settings] ➤ [Compare View] ➤ [Enable] is set to [On].

10
- It is not possible to set the function after selecting Picture Mode when the right screen is selected. The right screen's setting will be the same as set for the left screen.
- When [Backlight Control] settings are changed while [Boost Contrast] is [On], the settings for [Backlight Control] when [Boost Contrast] is [Off] are also changed.

[11] • SD-SDI signal is fixed to [Non-constant Luminance].
• If [Channel Settings] ❯ [Picture Mode] ❯ [Type] is [L/R], [2020 Constant Luminance] is fixed at [Non-constant Luminance] for the following. However, if [Color Gamut] for the left and right screens is [ITU-R BT.2020], then the right screen's setting will be the same as set for the left screen.
- When displaying a single terminal's input in full-screen
- When displaying "2 Sample Interleave" or "Dual Link 3G-SDI" signals

[12] • Cannot be set when [Picture Mode] is selected in the right screen.
• When the [Contrast] setting for the left screen is specified as [1000] or less, the luminance of the left and right screens is the same.

[13] • Calibration cannot be executed when using DC power.
• When [Luminance] is set to high brightness, it may be calibrated beyond the brightness adjustment range and set lower than the target value, depending on the [Color Temperature] setting. In that case, set the [Luminance] again.
• Calibration cannot be executed in [Picture Mode] for the right screen.

[14] • Parameter of HDMI metadata and Video Display

HDMI metadata		Video display setting
Color Gamut	BT.709	ITU-R BT.709
	BT.2020	ITU-R BT.2020
Gamma/EOTF	Traditional SDR	2.2
	PQ	PQ
	Hybrid Log-Gamma	Hybrid Log-Gamma

• Cannot set [HDMI Link] when [Channel Settings] ❯ [Picture Mode] ❯ [Type] is [L/R].

[15] In [Picture Mode] other than [User 1–7], the results of calibration performed at the factory are copied.

■ Details of the factory default settings for each [Picture Mode]

Item		SMPTE-C	EBU	ITU-R BT.709	ITU-R BT.2020	Adobe RGB	DCI-P3
Contrast		1000	1000	1000	1000	1000	480
	OPTION	1000	1000	1000	1000	1000	480
Brightness		0	0	0	0	0	0
Chroma		1000	1000	1000	1000	1000	1000
Sharpness		0	0	0	0	0	0
Backlight Control		Local Dimming Low	Local Dimming Low	Local Dimming Low	Local Dimming Low	Local Dimming Low	Local Dimming Low
	OPTION	Local Dimming Low	Local Dimming Low	Local Dimming Low	Local Dimming Low	Local Dimming Low	Local Dimming Low
Color Temperature	Preset	D65	D65	D65	D65	D65	DCI-P3
	x	0.313	0.313	0.313	0.313	0.313	0.314
	y	0.329	0.329	0.329	0.329	0.329	0.351
	Gain R/G/B	1023/1023/1023 (When [D65 Custom]: 1000/1023/1023)					
	Bias R/G/B	0	0	0	0	0	0
Color Gamut		SMPTE-C	EBU	ITU-R BT.709	ITU-R BT.2020	Adobe RGB	DCI-P3
Gamma/EOTF		2.2	2.35	2.2	2.2	2.2	2.6
Color Range		Automatic	Automatic	Automatic	Automatic	Automatic	Automatic
Input Transform		–	–	–	–	–	–
Output Transform		–	–	–	–	–	–
Output Transform Surround		–	–	–	–	–	–
CDL/User LUT		Off	Off	Off	Off	Off	Off
Boost Contrast OPTION		Off	Off	Off	Off	Off	Off
YCbCr Color Matrix		Automatic	Automatic	Automatic	Automatic	Automatic	Automatic
2020 Constant Luminance		Non-constant Luminance	Non-constant Luminance	Non-constant Luminance	Non-constant Luminance	Non-constant Luminance	Non-constant Luminance
2020 Gamut Mapping		Clipping	Clipping	Clipping	Clipping	Clipping	Clipping
Hybrid Log-Gamma System		–		Manual (when [Hybrid Log-Gamma]: 1.200; when [Hybrid Log-Gamma RGB]: γ1.2-1000 cd/m^2)		–	
HDR/SDR View		Off	Off	Off	Off	Off	Off
HDMI Link		Off	Off	Off	Off	Off	Off
Picture Mode Name		–	–	–	–	–	–

Item		User 1	User 2	User 3	User 4	User 5 to User 7
Contrast		3000	3000	3000	3000	1000
	OPTION	6000	6000	6000	6000	1000
Brightness		0	0	0	0	0
Chroma		1000	1000	1000	1000	1000
Sharpness		0	0	0	0	0
Backlight Control		Local Dimming Low	Local Dimming Low	Local Dimming Low	Local Dimming Low	Local Dimming Low
	OPTION	Global Dimming	Global Dimming	Global Dimming	Global Dimming	Local Dimming Low
Color Temperature	Preset	D65	D65	DCI-P3	D65	D65
	x	0.313	0.313	0.314	0.313	0.313
	y	0.329	0.329	0.351	0.329	0.329
	Gain R/G/B	1023/1023/1023 (When [D65 Custom]: 1000/1023/1023)				
	Bias R/G/B	0	0	0	0	0
Color Gamut		ITU-R BT.2020	ITU-R BT.2020	DCI-P3	DCI-P3	ITU-R BT.709
Gamma/EOTF		SMPTE ST 2084 (PQ)	Hybrid Log-Gamma	SMPTE ST 2084 (PQ)	SMPTE ST 2084 (PQ)	2.2
Color Range		Automatic	Automatic	Automatic	Automatic	Automatic
Input Transform		–	–	–	–	–
Output Transform		–	–	–	–	–
Output Transform Surround		–	–	–	–	–
CDL/User LUT		Off	Off	Off	Off	Off
Boost Contrast OPTION		On	On	On	On	Off
YCbCr Color Matrix		Automatic	Automatic	Automatic	Automatic	Automatic
2020 Constant Luminance		Non-constant Luminance	Non-constant Luminance	Non-constant Luminance	Non-constant Luminance	Non-constant Luminance
2020 Gamut Mapping		Clipping	Clipping	Clipping	Clipping	Clipping
Hybrid Log-Gamma System		Manual (when [Hybrid Log-Gamma]: 1.200; when [Hybrid Log-Gamma RGB]: γ1.2-1000 cd/m^2)				
HDR/SDR View		On	On	On	Off	Off
HDMI Link		Off	Off	Off	Off	Off
Picture Mode Name		User 1 (2020 PQ)	User 2 (2020 HLG)	User 3 (DCI PQ)	User 4 (DCI PQ D65)	User 5 to User 7

Item		CINEMA EOS SYSTEM	ACESproxy (ver. 1.0.1)
Contrast		3000	480
	OPTION	6000	480
Brightness		0	0
Chroma		1000	1000
Sharpness		0	0
Backlight Control		Local Dimming Low	Local Dimming Low
	OPTION	Global Dimming	Local Dimming Low
Color Temperature	Preset	D65	D60
	x	0.313	0.322
	y	0.329	0.338
	Gain R/G/B	1023/1023/1023 (When [D65 Custom]: 1000/1023/1023)	
	Bias R/G/B	0	0
Color Gamut		ITU-R BT.2020	–
Gamma/EOTF		Canon Log 2 (HDR)	–
Color Range		Automatic	–
Input Transform		–	Automatic
Output Transform		–	DCI-P3
Output Transform Surround		–	Dark Surround
CDL/User LUT		Off	Off
Boost Contrast OPTION		On	Off
YCbCr Color Matrix		Automatic	Automatic
2020 Constant Luminance		Non-constant Luminance	Non-constant Luminance
2020 Gamut Mapping		Clipping	Clipping
Hybrid Log-Gamma System		Manual (when [Hybrid Log-Gamma]: 1.200; when [Hybrid Log-Gamma RGB]: γ1.2-1000 cd/m^2)	–
HDR/SDR View		Off	Off
HDMI Link		Off	Off
Picture Mode Name		–	–

Channel Settings

This menu is used for input related settings. Select the [Select Channel] and choose a channel number from CH1 to CH20. Finally define the parameter of each of the [Channel Settings].

❖ "Supported Signal Format" (📖115)

Sub Menu	Setting Options	
Select Channel[1]	CH1 to CH20	Display the channel number. In addition, you can assign each content of [Channel Settings] to each channel (📖38).
Input Configuration	**V1710** 6G/3G/HD-SDI 3G-SDI RAW SD-SDI HDMI — (Not set) **V1711** 12G-3G/HD-SDI 3G-SDI RAW SD-SDI HDMI — (Not set)	Select the input. Factory default depend on the channel (📖39).
Select Input Signal[2]	Automatic Quad Input Dual Input A,B Dual Input C,D Single Input A Single Input B Single Input C Single Input D	Sets the signal display method (📖22). [Automatic]: The display method is automatically determined to match the input signal. [Quad Input]: Four input signals (Input A to Input D terminals) are displayed. [Dual Input A,B]: Two input signals (Input A terminal and Input B terminal) are displayed. [Dual Input C,D]: Two input signals (Input C terminal and Input D terminal) are displayed. [Single Input A], [Single Input B], [Single Input C], [Single Input D]: One input signal (any of Input A to Input D) is displayed.

Sub Menu	Setting Options	
Image Division[3]	When [Input Configuration] ➤ [6G/3G/HD-SDI (V1711 12-3G/HD-SDI)] Sets the display method when using either [Quad Input] or [Dual Input]. Two division methods "Square Division" and "2 Sample Interleave" are supported for 4K video signals.	
	Automatic Square Division 2 Sample Interleave [Select Input Signal] ➤ When [Quad Input] Multi View (Quad) When [Dual Input] Dual Link 3G-SDI Multi View (Dual)	[Automatic]: Automatically determined based on payload and displayed. [Square Division]: Displays a signal transmitted over four inputs as a single image. [2 Sample Interleave]: Displays a signal transmitted divided into a 2K/HD signal as a single image. [Multi View (Quad)]: Each of the images from the four inputs are shown in four screens. [Dual Link 3G-SDI]: Displays a Dual Link 3G-SDI signal as a single image. [Multi View (Dual)]: Each of the images (Inputs A/B or Inputs C/D) from the two inputs are shown in two screens. 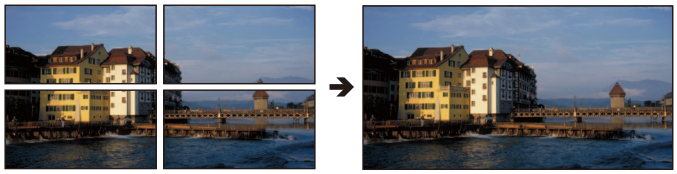 Select Input Signal: Quad Input, Image Division: Square Division
Link Order	**Automatic** Off	Automatically detects and displays correct terminal order based on payload when using [2 Sample Interleave] or [Dual Link 3G-SDI].
Format[4]	SDI Signal Automatic 4:2:2 YCbCr 10-bit 4:2:2 YCbCr 12-bit 4:4:4 YCbCr 10-bit 4:4:4 YCbCr 12-bit 4:2:2 ICtCp 10-bit 4:2:2 ICtCp 12-bit 4:4:4 ICtCp 10-bit 4:4:4 ICtCp 12-bit 4:4:4 RGB 10-bit 4:4:4 RGB 12-bit 4:4:4 XYZ 10-bit 4:4:4 XYZ 12-bit HDMI Signal Automatic 4:4:4 XYZ 12/10-bit	Sets the color format and gradation. [Automatic]: Sets automatically to match the input signal.

Sub Menu	Setting Options	
Audio Input[5]	[Select Input Signal] ➤ When [Quad Input] Automatic, Input A, Input B, Input C, Input D When [Dual Input A,B] Automatic, Input A, Input B When [Dual Input C,D] Automatic, Input C, Input D	Sets the audio terminal. [Automatic]: Sets automatically to match the input signal.
Marker/TC/CameraInfo Input[6]	[Select Input Signal] ➤ When [Automatic] or [Quad Input] Input A, Input B, Input C, Input D When [Dual Input A,B] Input A, Input B When [Dual Input C,D] Input C, Input D	Set the target terminal so that various markers (except Grid Marker), Time Code, and Camera Information are displayed. (Camera Information is available in the [Multi View (Quad)] display only)
Internal Sync	On, Off	When [Image Division] ➤ [Square Division] Sets whether to synchronize four inputs. [On]: Force synchronization. [Off]: Do not force synchronization.
Channel Name		Sets the name of the selected channel. You can input up to 16 alphanumeric characters.
Picture Mode[7]	Set [Picture Mode] by individual channel.	
Type	Normal L/R 4K/2K Automatic	[Normal]: Sets one [Picture Mode]. [L/R]: Sets [Picture Mode] by individual left and right screen. Displays as [Single Input Dual View] when using resolutions of 2K or lower. [4K/2K]: Sets [Picture Mode] by individual 4K or 2K signal screen. [Automatic]: [Picture Mode] is set according to the SDI signal. The set [Picture Mode] is changed to in the order camera metadata → Payload → resolution (4K/2K).

Sub Menu	Setting Options	
[Type] ➤ When [Normal] Picture Mode When [L/R] Picture Mode L Picture Mode R When [4K/2K] Resolution 4K, 2K When [Automatic] Resolution 4K, 2K Payload UHD/PQ, UHD/HLG, UHD, 709/PQ, 709/HLG, 709, VANC, Unknown Camera CINEMA EOS SYSTEM, ARRI, VARICAM	SMPTE-C EBU ITU-R BT.709 ITU-R BT.2020 Adobe RGB DCI-P3 User 1 (2020 PQ) User 2 (2020 HLG) User 3 (DCI PQ) User 4 (DCI PQ D65) User 5 ~ User 7 CINEMA EOS SYSTEM ACESproxy (ver. 1.0.1) — (Not set)	Set the [Picture Mode] for each screen. [ACESproxy (ver. 1.0.1)]: Can be set when [Type] is [Normal]. [—] (Not set): Cannot automatically change image quality to suit input signal. Can be set when other than [Resolution 4K] and [Resolution 2K] are selected in [Type] ➤ [Automatic]. • Colorimetry Bit/Transfer Characteristics of the SDI Payload ID supports the signal in conformity with the following standard. SMPTE ST 2082-10:2018 (12G-SDI) V1711 SMPTE ST 2081-10:2018 (6G-SDI) SMPTE ST 425-1:2017 (3G-SDI Single Link / Square Division) SMPTE ST 425-3:2019 (3G-SDI Dual Link(2SI)) SMPTE ST 425-5:2019 (3G-SDI Quad Link(2SI)) SMPTE ST 292-1:2018 (HD-SDI)
Single Input Dual View[8]	Automatic, Off	When other than [Image Division] ➤ [Multi View (Quad)] or [Multi View (Dual)] The image from the input signal can be reduced and shown in dual-screen. [Automatic]: When [Picture Mode] ➤ [Type] is [L/R], or when the [Picture Function Settings] Sub Menu items are set to [On], identical images are automatically shown and dual-screen comparison can be made. 4K images are shown in reduced size. Relevant [Picture Function Settings] Sub Menu items: [Peaking], [False Color], [Over Range], [2020 Outside of Gamut View], [Monochrome], [Blue Only], [Red Off], [Green Off], [Blue Off], and [Compare View]
Separator	White Half Black Off	In the following cases, screen borders will be displayed. - When [Picture Mode] ➤ [Type] is [L/R] - When [Multi View (Quad)] or [Multi View (Dual)] is selected - When [Single Input Dual View] is set to [Automatic] and the images are shown next to each other for image comparison - When [Picture Function Settings] ➤ [Compare View] ➤ [Enable] is [On]

[1] It may take 5 seconds when switching channels.

[2] Settings that can be set differ according to the input signal.
- [SD-SDI]: Only [Single Input A] to [Single Input D] can be selected.
- [HDMI]: This is fixed to [Automatic].

[3]
- **V1711** The combinations of video signal formats that can be displayed when using two screens or four screens in [Multi View (Quad)] or [Multi View (Dual)] are as follows:
  - Resolution combinations: Same, or "4096x2160, 2048x1080", "3840x2160, 1920x1080"
  - When using a frame rate and I/P/PsF combination that is one of "23.98P / 24P / 25P / 29.97P / 30P"
    "I (All) / PsF (All) / 47.95P / 48P / 50P / 59.94P / 60P"
  - (Quad screen display only) For both left and right, when the top and bottom screen video signal frame rates and I/P/PsF are the same
- There may be periodical deterioration in the image when inputting signals with differing frame rates or I/P/PsF.
- When using [Multi View (Quad)] or [Multi View (Dual)]: For 2048×1080 images, the images are displayed in reduced size when [Screen Scaling] is set to [Automatic]. The left and right parts of the screen will be trimmed for display when anything other than [Automatic] is selected.

[4]
- The HD-SDI signal is either [4:2:2 YCbCr 10-bit] or [4:2:2 ICtCp 10-bit].
- [SD-SDI] is fixed to [4:2:2 YCbCr 10-bit].
- For [3G-SDI RAW], the setting is fixed to [Automatic].
- If [Automatic] is selected, they are rendered in a Payload that is selected in the order A → B → C → D.
- The settings for correctly displaying ICtCp format signals are as follows.
  - [Picture Mode]: [ITU-R BT.709] or [ITU-R BT.2020]
  - [Color Gamut]: [ITU-R BT.709] or [ITU-R BT.2020]
  - [Gamma/EOTF]: [SMPTE ST 2084 (PQ)], [Hybrid Log-Gamma] or [Hybrid Log-Gamma RGB]
- If you need to use the ICtCp format for SDI signals, select any of the following to match the signal: [4:2:2 ICtCp 10-bit], [4:2:2 ICtCp 12-bit], [4:4:4 ICtCp 10-bit], [4:4:4 ICtCp 12-bit]
- To use 4:4:4 XYZ 10-bit for SDI signals, select [4:4:4 XYZ 10-bit]. Then, signals will be processed as signals where XYZ data is included in RGB data output in 4:4:4 RGB 10-bit format.

[5] For [Select Input Signal] ❯ [Automatic] or [Single Input], it is fixed at [Automatic].

[6] This setting becomes invalid except for the [Multi View (Quad)] or [Multi View (Dual)] display.

[7]
- Settings that can be set differ according to the input signal.
  - [SD-SDI]: [Type] is fixed to [Normal]. [Automatic] cannot be set.
  - [3G-SDI RAW] and [HDMI]: [Automatic] and [4K/2K] cannot be set in [Type].
- When [Type] is [L/R]
  - Setting the same [Picture Mode] for both left and right screens will cause [Picture Mode] in the non-selected screen to change to a different mode (for example, the [Picture Mode] settings of the left and right screens are switched).
  - When using a signal 2K or under, it is fixed at [Single Input Dual View].

[8] Cannot be used when an unsupported video signal is input.

Display Settings

This menu is used to configure the display method.

Sub Menu	Setting Options (Bold: factory default)	
Screen Scaling[1]	Native Input Resolution 200% **Automatic**	Defines how the video is scaled and displayed on the screen. [Native Input Resolution]: Displays the input signal without scaling. 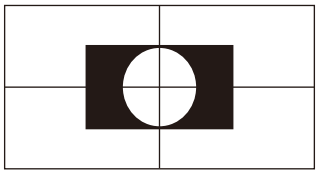 1920x1080 (original) [200%]: Doubles the vertical and horizontal dimensions. 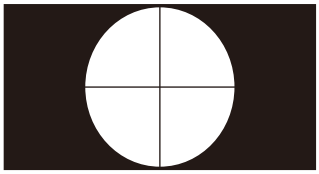 1920x1080→3840x2160 [Automatic]: Fits size to fill screen. 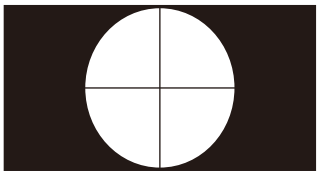 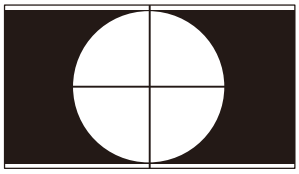 1920x1080→3840x2160 4096×2160→3840×2025
Anamorphic[2]	x2.0 x1.8 x1.5 x1.33 **Off**	Set when checking images photographed using an anamorphic lens. Displayed in accordance with the set magnification.

Sub Menu	Setting Options (Bold: factory default)	
Scaling Method	**Shape Trace** Bicubic Nearest Neighbor	Sets the interpolation method when [Screen Scaling] is set to [200%] or [Automatic]. [Shape Trace]: Canon original processing that produces smooth slopes with reduced jagged lines. [Bicubic]: General interpolation process that uses neighboring pixel information to create interpolated pixels. [Nearest Neighbor]: Process that uses nearest neighbor pixel information to create (copy) new pixels. This is useful as it enlarges the original pixels, thus making any jagged lines visible.
Video Position (Multi View)	Top **Middle** Center	When using [Multi View (Quad)], [Multi View (Dual)], or [Single Input Dual View] Sets the vertical display position for the image. [Top]: Displays at the top of the screen. [Middle]: Displays at the top middle of the screen. [Center]: Displays at the middle of the screen.
Zoom[3]	Enlarges part of the video image. The zoom function can be used when the resolution is [4096x2160], [3840x2160], [2048x1080] or [1920x1080].	
Zoom Preset	Zoom 1 Zoom 2 Zoom 3 **Off**	Sets the zoom display method. There are three presets.
Magnification	x2 x4 x8	Sets the display scale of zoom.
Position		The zoom adjustment screen is displayed. Use the jog dial to adjust the display position.
Type	**Normal** Single Input Dual View	Sets the enlarged image display method. [Normal]: Only displays the enlarged image. [Single Input Dual View]: Displays the overall image on the left and the enlarged image on the right.

Sub Menu	Setting Options (Bold: factory default)	
Frame Hold[4]	On, **Off**	Pauses the video.
I/PsF	**Automatic** Interlace PsF	Defines how the interlace signal or PsF signal is displayed. [Automatic]: Automatically determined based on payload and displayed. If there is no payload, the signal is displayed as an interlace signal. [Interlace]: Displayed as an interlace signal. [PsF]: Displayed as a PsF signal.
PsF	**Progressive** Interlace	Defines how the PsF signal is displayed. [Progressive]: Interpolates giving preference to image quality by detecting paired fields. [Interlace]: Interpolates using two adjacent fields giving priority to speed.
I/P Conversion	**Image Priority** Speed Priority	Sets the interlaced signal I/P conversion method. [Image Priority]: This mode gives priority to image quality. Processing time will be longer than [Speed Priority]. [Speed Priority]: This mode gives priority to speed.
Film Cadence[5]	2-2 2-3 2-3-3-2 **Off**	Sets the film cadence mode. [2-2]: Displays progressive image after conversion for 2-2 pulldown processed interlaced signal input. [2-3]: Displays progressive image after conversion for 2-3 pulldown processed interlaced signal input. [2-3-3-2]: Displays progressive image after conversion for 2-3-3-2 pulldown processed interlaced signal input. [Off]: Does not perform film cadence mode progressive conversion.

[1]
- In the following cases, the maximum magnification is 200% even if [Automatic] is selected.
  - When [Peaking], [False Color] or [Over Range] is [On]
- In the following cases, images are shown in reduced size when [Automatic] is selected.
  - [4096×2160]: When [Image Division] ➤ [Square Division] is selected
  - [2048×1080]: When [Image Division] ➤ [Multi View (Quad)] or [Multi View (Dual)] is selected

[2] Settings are invalid in the following cases:
- When [Peaking], [False Color] or [Over Range] is set to [On]

[3]
- The zoom function cannot be used in the following cases:
  - During execution of [Playback File] under [Screen Capture]
  - During display of the test pattern
  - When [Multi View (Quad)] or [Multi View (Dual)] is selected
  - When [Channel Settings] ➤ [Picture Mode] ➤ [Type] is set to [L/R]
  - When [Picture Function Settings] ➤ [Compare View] ➤ [Enable] is set to [On]
- While the zoom function is in use, the following are not displayed:
  Various markers
- When zoom settings are changed, [Frame Hold] turns [Off].
- When [Type] ➤ [Normal] is selected: When the resolution is [1920x1080], the display position cannot be changed even if [Magnification] is set to [x2].
- When [Type] ➤ [Single Input Dual View] is selected: For 4K video (3840x2160 or 4096x2160), the quality of the enlarged image will be degraded compared to [Normal].

[4]
- Setting is disabled when [Peaking] is set to [On].
- If the image quality setting is changed while the video is paused, the setting may not change correctly.

[5]
- This can be set only when [I/P Conversion] is set to [Image Priority].
- Cannot be set in the [Multi View (Quad)] or [Multi View (Dual)] display. The setting is fixed to [Off].

Audio Settings

This menu is used to set audio output from the headphone terminal.

Sub Menu	Setting Options (Bold: factory default)	
SDI Group	**CH1-CH8** CH9-CH16	Switches the audio group to be input during SDI audio input.
CH L (SDI)	[SDI Group] ➤ When [CH1-CH8] CH1 to CH8 (**CH1**) When [CH9-CH16] CH9 to CH16 (**CH9**)	Sets the audio to be output from the two channels (L/R) of the headphone respectively. The options differ according to the [SDI Group] setting.
CH R (SDI)	[SDI Group] ➤ When [CH1-CH8] CH1 to CH8 (**CH2**) When [CH9-CH16] CH9 to CH16 (**CH10**)	
CH L (HDMI)	CH1 to CH8 (**CH1**)	Sets the audio to be output from the two channels (L/R) of the headphone respectively.
CH R (HDMI)	CH1 to CH8 (**CH2**)	
Volume	0 to 100 (**30**)	Sets the volume. (Increments of 1)
Audio Switch	**L R** L R MIX (L+R)	Sets the stereo output.

Marker Settings

This menu is used to configure various markers.

Sub Menu	Setting Options (Bold: factory default)	
Marker Preset	**Marker 1** to 5 Off	Customizes markers which are assigned to markers 1 to 5.
Aspect Marker[1]	[Aspect Marker] displays a range in accordance with the specified aspect ratio. 	
Enable	On, **Off**	Switches the aspect marker On, Off.
Mask	Black Half **Off**	Switches the mask color. Mask is the blanking area outside the range of the marker. [Black]: [Half] (50% gray): [Off]: Turns mask off.
Aspect Ratio	**16:9**, 15:9, 14:9, 13:9, 4:3, 2.39:1, 2.35:1, 1.896:1, 1.85:1, 1.66:1, Variable • When Variable is selected 1.00:1 to 3.00:1 (**1.78:1**)	Sets the aspect ratio of the aspect marker. The aspect ratio can be entered as a numeric value when you select [Variable] (0.01:1 increments). The grayed out slider becomes active and can be used to set the aspect ratio.
Line	**On**, Off	When [Mask] ❯ [Black] or [Half] Switches lines on mask On, Off.
Line Width	Thick **Normal** Thin	Sets the thickness of the aspect marker line.

Sub Menu	Setting Options (Bold: factory default)	
Line Color	**White**, Red, Green, Blue, Yellow, Cyan, Magenta, Gray	Sets the color of the aspect marker line.
Line Brightness	High, **Low**, Half	Sets the brightness of the aspect marker line.
H Position	-65 to 65 (**0**)	Changes horizontal position without changing the aspect.
V Position	-35 to 35 (**0**)	Changes vertical position without changing the aspect.
Safety Zone Marker 1, 2[1]	There are two types of [Safety Zone Marker]: 1 and 2, which share the same settings. A safety zone marker is used to set the safe zone of the image (actual displayed area) to check the image.	
Enable	On, **Off**	Switches the safety zone marker On, Off.
Aspect Ratio[2]	**16:9**, 15:9, 14:9, 13:9, 4:3, 2.39:1, 2.35:1, 1.896:1, 1.85:1, 1.66:1, Variable • When Variable is selected 1.00:1 to 3.00:1 (**1.78:1**)	Sets the aspect ratio of the safety zone marker. [Variable]: The aspect ratio can be entered as a numeric value (0.01:1 increments). The grayed out slider becomes active and can be used to set the aspect ratio.
Area Size	**80%**, 88%, 90%, 93%, Variable (%), Variable (dot)	Sets the safety zone marker area size. [Variable (%)]: The grayed out [Rate (%)] becomes active. [Variable (dot)]: The grayed out [Width (dot)] and [Height (dot)] become active.
Rate (%)	50 to 100 (**80**)	When [Area Size] ❯ [Variable (%)] Move the slider to set the displayed marker area size without changing the aspect ratio in 1 % increments.
Width (dot)	360 to 3840 (**3072**)	When [Area Size] ❯ [Variable (dot)] Move the slider to set the area width in 2 dot increment.
Height (dot)	240 to 2160 (**1728**)	When [Area Size] ❯ [Variable (dot)] Move the slider to set the area height in 2 dot increment.

Sub Menu	Setting Options (Bold: factory default)	
Shape	**Box** Brackets Enclosure	Sets the area shape of the safety zone marker. [Box]: 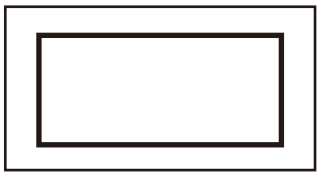 [Brackets]: [Enclosure]:
Line Width	Thick **Normal** Thin	Sets the width of the safety zone marker line.
Line Color	**White**, Red, Green, Blue, Yellow, Cyan, Magenta, Gray	Sets the color of the safety zone marker line.
Line Brightness	High, **Low**, Half	Sets the brightness of the safety zone marker line.
H Position	-65 to 65 (**0**)	Adjusts the marker horizontal position with the set aspect and size.
V Position	-35 to 35 (**0**)	Adjusts the marker vertical position with the set aspect and size.

Sub Menu	Setting Options (Bold: factory default)	
Area Marker[1]	[Area Marker] is used to check a specific area using a rectangular box.	
Enable	On, **Off**	Switches the area marker On, Off.
H Position	0 to 3830 (**240**)	Sets the start position (x-coordinate) to draw the rectangle. (in increments of 2)
V Position	0 to 2150 (**120**)	Sets the start position (y-coordinate) to draw the rectangle. (in increments of 2)
Width (dot)	10 to 3840 (**240**)	Sets the width of the rectangle. (in increments of 2)
Height (dot)	10 to 2160 (**120**)	Sets the height of the rectangle. (in increments of 2)
Mask	Black Half **Off**	Switches the mask color (in the marker).
Line	**On**, Off	When [Mask] ❯ [Black] or [Half] Turns On/Off the outlines of the rectangular box.
Line Width	Thick **Normal** Thin	Sets the width of the area marker line.
Line Color	**White**, Red, Green, Blue, Yellow, Cyan, Magenta, Gray	Sets the color of the area marker line.
Line Brightness	High, **Low**, Half	Sets the brightness of the area marker line.
Center Marker[3]	[Center Marker] shows the center of the image.	
Enable	On, **Off**	Switches the center marker On, Off.
Size	Large **Middle** Small	Sets the size of the center marker.
Line Width	Thick **Normal** Thin	Sets the width of the center marker line.
Line Color	**White**, Red, Green, Blue, Yellow, Cyan, Magenta, Gray	Sets the color of the center marker line.
Line Brightness	High, **Low**, Half	Sets the brightness of the center marker line.

Sub Menu	Setting Options (Bold: factory default)	
Grid Marker[3]	[Grid Marker] is marker used to check the horizontal and vertical position. 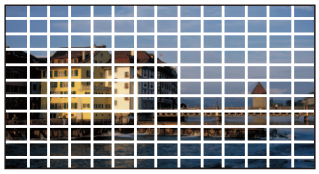	
Enable	On, **Off**	Switches the grid marker On, Off.
Distance	**160 dots** 240 dots 320 dots	Sets the horizontal and vertical line distance.
Line Width	Thick **Normal** Thin	Sets the width of the grid marker line.
Line Color	**White**, Red, Green, Blue, Yellow, Cyan, Magenta, Gray	Sets the color of the grid marker line.
Line Brightness	High, **Low**, Half	Sets the brightness of the grid marker line.

[1] The marker is not displayed in the following cases:
- When there is no signal, unsupported signal, or a channel with [Input Configuration] not set is selected
- When an enlarged image is displayed
- During the execution of [Playback File] under [Screen Capture]
- When a [Test Pattern] is displayed

[2] When [Area Size] is set to [Variable (dot)], you cannot select [Aspect Ratio].

[3] The marker is not displayed in the following cases:
- When an enlarged image is displayed

Function Settings

This menu is used to set the image signal information display and the cinema camera link function.

Sub Menu	Setting Options (Bold: factory default)	
Time Code[1, 2]	Display the time code superimposed on the signal. 	
Enable	On, **Off**	Switches the time code display On, Off.
Type	**VITC** LTC	Selects the type.
Size	Large **Small**	Selects the size.
Position[3]	Top Left Top Right **Bottom Left** Bottom Right	Selects the display position.
H Offset	0 to 1332 (**0**)	Adjusts the display position of the time code.
Type String Display	**On**, Off	Sets display of VITC/LTC strings.
Brightness	**Normal**, Half	Sets the Brightness of the strings.
Audio Level Meter[1, 4]	Configures various settings for the audio level meter. Displays the audio level of the selected channel number. V1711 When using dual or quad screens, setting [Channel Settings] ❯ [Audio Input] to [Automatic] will display multiple audio level meters. You can display up to eight channels on the screen overall.	
Enable	On, **Off**	Switches the audio level meter On, Off.
Channel Number (SDI)	2CH 4CH 6CH **8CH** 8CH (1-4, 5-8)	Sets the number of channels displayed when SDI signal is input. Options change according to the setting for [SDI Group] under [Audio Settings]. When [SDI Group] ❯ [CH1-CH8] [2CH]: CH1 to CH2 [4CH]: CH1 to CH4 [6CH]: CH1 to CH6 [8CH]: CH1 to CH8 When [SDI Group] ❯ [CH9-CH16] [2CH]: CH9 to CH10 [4CH]: CH9 to CH12 [6CH]: CH9 to CH14 [8CH]: CH9 to CH16
Channel Number (HDMI)	**2CH** 4CH 6CH 8CH	Sets the number of channels displayed when HDMI signal is input. [2CH]: CH1 to CH2 [4CH]: CH1 to CH4 [6CH]: CH1 to CH6 [8CH]: CH1 to CH8
Size	Large **Middle** Small	Sets the size of the display.

Sub Menu	Setting Options (Bold: factory default)	
Peak Hold	**On**, Off	One second of audio signal at the peak is kept.
Reference Level	-40 to 0 (**-20**)	Sets the reference level.
Brightness	**Normal** Low Half	Sets brightness for the audio level meter.
Wave Form Monitor[1]	Configures various settings for the wave form monitor. On the wave form monitor, the horizontal axis shows the horizontal resolution of the video and the vertical line shows the signal level. To the right of the wave form monitor, [Color Range] and [HDR Range] information (vertical line) is displayed. 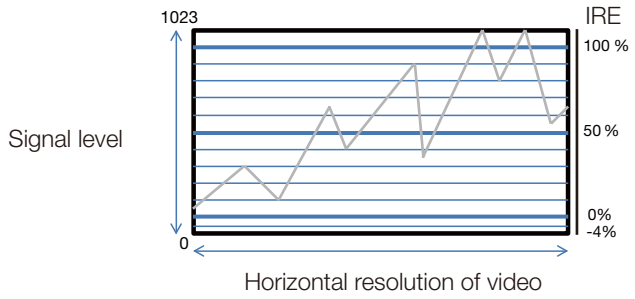 	
Enable	On, **Off**	Switches the wave form monitor On, Off.
Select Signal	**Y**, Cb, Cr, R, G, B	Sets the waveform to be displayed.
Display Type	**All** Line	Sets the display type. [Line]: The data for one line is displayed.
Select Line	**1** to 2160	Selects the line to be displayed when [Line] is selected.
Scale	**Automatic** IRE ST 2084 (PQ) Full ST 2084 (PQ) Limited Hybrid Log-Gamma Canon Log Canon Log 2 Canon Log 3 S-Log2 S-Log3 ARRI (Rec2100-PQ-1K-100) ARRI (Rec2100-HLG-1K-200)	Sets the scale of the wave form monitor. [Automatic]: Sets in accordance with the [Gamma/EOTF] and [Color Range] settings.
Reference Line	4 to **1023**	A guide is displayed at the specified position. [Reference Line] is not displayed when [1023] is selected.

Sub Menu	Setting Options (Bold: factory default)	
Reference Level	**Automatic** Manual	Sets the range of the reference level. Tints the outside of the range of the reference level. [Automatic]: Sets in accordance with the [Gamma/EOTF] and [Color Range] settings. • In the case of [Gamma/EOTF] corresponding to the HDR range, parts that exceed the HDR range are tinted. • When [Color Range] ❯ [Limited], outside the limited range is tinted.
Reference Level High	468 to 1023	Sets the reference display level (high). [Reference Level High] is not displayed when [1023] is selected.
Reference Level Low	0 to 468	Sets the reference display level (low). [Reference Level Low] is not displayed when [0] is selected.
Color	Sets the signals to be displayed and the color of signals exceeding the reference level.	
Y Cb Cr R G B Reference Level High Reference Level Low	White Red Green Blue Yellow Cyan Magenta	[Y], [Cb], [Cr], [R], [G], [B]: Selects the color of the selected signal. Default value of each signal is shown below. Y (White), Cb (White), Cr (White), R (Red), G (Green), B (Blue) [Reference Level High], [Reference Level Low]: Selects the color of the signal of the selected reference level. Default value of each reference level is shown below. Reference Level High (Magenta), Reference Level Low (Cyan)
OPTION Brightness	**Automatic** Normal Low	Sets the Brightness of the wave form monitor. [Automatic]: Brightness is automatically adjusted according to the contrast value and average luminance value of the input signal.
Position[3]	**Bottom Left** Bottom Right	Selects the display position.
Size	Large, **Middle**, Small	Sets the size of the display.
Vector Scope[1]	Configures various settings for the vector scope. Vector scope displays the intensity of color signals and hue with the horizontal axis showing the color difference signal Cb and the vertical line showing Cr.	
Enable	On, **Off**	Switches the vector scope On, Off.

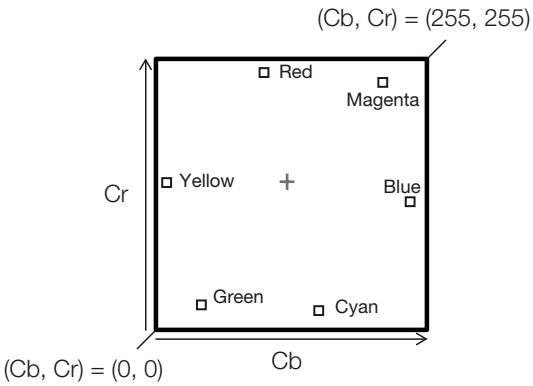

Sub Menu	Setting Options (Bold: factory default)	
Target	75% **100%** 75%+100%	Sets the target.
Position[3]	Bottom Left **Bottom Right**	Selects the display position.
Size	Large, **Middle**, Small	Sets the size of the display.
Histogram[1, 5]	Displays the luminance distribution of the video. 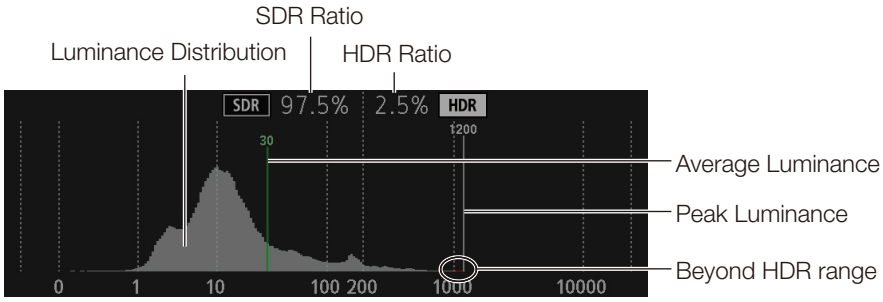 	
Enable	On, **Off**	Switches between displaying or hiding [Histogram].
Color	**Automatic** Normal False Color	[Automatic]: Unless [Picture Function Settings] ➤ [False Color] ➤ [Enable] is set to [Off], it will automatically adjust the display to match the [False Color] settings. [Normal]: Displays in monochrome. [False Color]: When [Gamma/EOTF] is set to [SMPTE ST 2084 (PQ)] or [Hybrid Log-Gamma], then it will adjust the display to match the [False Color] settings. When [False Color] ➤ [Enable] is [False Color 1] or [Off]: Match the [False Color 1] settings. When [False Color] ➤ [Enable] is [False Color 2]: Match the [False Color 2] settings.
Gain	**x1**, x2, x3	Increases the displayed graph size.
HDR Range	**On** On (Clip) Off	[On]: Areas that exceed the HDR range will be tinted. [On (Clip)]: Areas that exceed the HDR range and areas that exceed the HDR range and are clipped will be tinted. [Off]: Areas that exceed the HDR range will not be tinted.
HDR/SDR Ratio	**On**, Off	When [Gamma/EOTF] is set to [SMPTE ST2084 (PQ)] or [Hybrid Log-Gamma] Switches between displaying or hiding [HDR/SDR Ratio]. The ratio calculation for HDR/SDR uses the [False Color] ➤ [HDR/SDR Border] settings.
Peak/Ave. Luminance	**On**, Off	When [Gamma/EOTF] is set to [SMPTE ST2084 (PQ)] or [Hybrid Log-Gamma] Switches between displaying or hiding [Peak/Ave. Luminance].
Size	**Large**, Small	Sets the size of the display.

Sub Menu	Setting Options (Bold: factory default)	
Frame Luminance Monitor[1, 6]	When [Gamma/EOTF] ❯ [SMPTE ST 2084 (PQ)] or [Hybrid Log-Gamma], "Max./Ave. Luminance" for the entire screen (frame) is displayed. For other conditions, "Max./Ave. Gradation Values" is displayed. The frame luminance monitor can be used when the resolution is [4096x2160], [3840x2160], [2048x1080] or [1920x1080]. 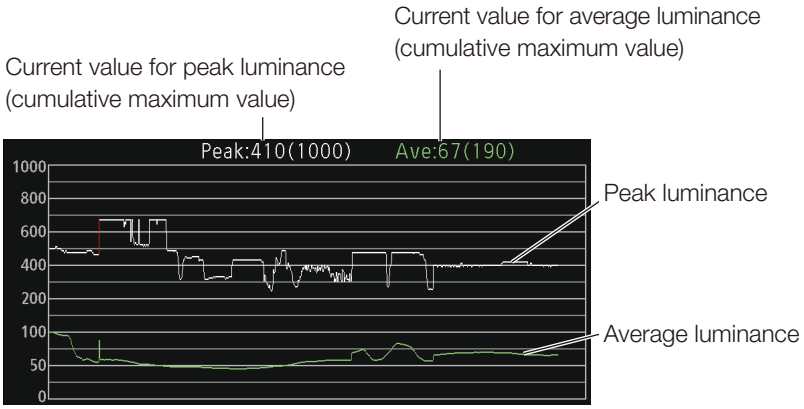 • Luminance graph 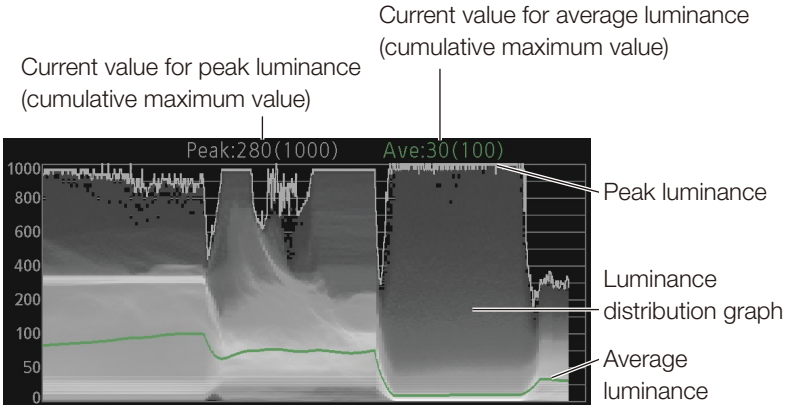 • Ratio graph 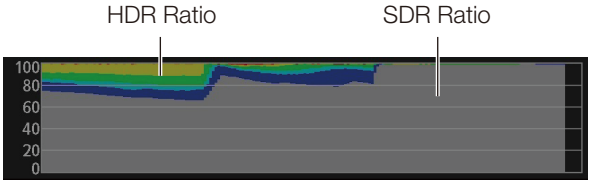 	
Enable	On, **Off**	Sets [Frame Luminance Monitor] on or off. Obtains the luminance value when valid.
Display	**All** Luminance Graph HDR/SDR Ratio Graph Luminance Value Off	Sets whether each graph is displayed. [All]: Displays [Luminance Graph (Including luminance value)] and [HDR/SDR Ratio Graph]. [Luminance Graph]: Displays [Luminance Graph (Including luminance value)]. [HDR/SDR Ratio Graph]: Displays [HDR/SDR Ratio Graph]. [Luminance Value]: Displays the peak and average luminance values. [Off]: Does not display any graphs.

Sub Menu	Setting Options (Bold: factory default)	
Luminance Graph Settings	Sets [Luminance Graph] display method.	
Luminance Distribution	**On**, Off	Switches between displaying and not displaying the luminance distribution graph.
Color	**Automatic** Normal False Color	[Automatic]: Unless [Picture Function Settings] ➤ [False Color] ➤ [Enable] is set to [Off], it will automatically adjust the display to match the [False Color] settings. [Normal]: Displays in monochrome. [False Color]: When [Gamma/EOTF] is set to [SMPTE ST 2084 (PQ)] or [Hybrid Log-Gamma], then it will adjust the display to match the [False Color] settings. When [False Color] ➤ [Enable] is [False Color 1] or [Off]: Match the [False Color 1] settings. When [False Color] ➤ [Enable] is [False Color 2]: Match the [False Color 2] settings.
Reference Luminance Level - Peak	**Automatic** Manual	[Automatic]: Works in conjunction with the [HDR Range] settings to automatically tint the areas that exceed the peak luminance. [Manual]: Sets the upper limit for peak luminance.
	400 to 10000 (**1000**)	Set when using [Manual]. Areas that exceed the set value will be tinted. (400 to 4000: increments of 100. 4000 to 10000: increments of 1000)
Ave.	100 to 1000 (**400**)	Areas that exceed the set value will be tinted. (increments of 100)
Reference Lum. Rise Level - Peak	0 to 1000 (**400**)	Sets the reference value for peak luminance rise level. (increments of 10 cd/m^2)
Ave.	0 to 1000 (**200**)	Sets the reference value for average luminance rise level. (increments of 10 cd/m^2)
HDR/SDR Ratio Graph Settings	Sets the [HDR/SDR Ratio Graph] display method. The ratios for HDR and SDR use the [False Color] ➤ [HDR/SDR Border] settings as well as the settings for each range.	
Type	**HDR/SDR** HDR	[HDR/SDR]: Displays the ratio between the HDR and SDR areas. [HDR]: Displays the ratio of luminance in the HDR area.
Scale	**Automatic**, 100%, 75%, 50%, 25%	When [Type] ➤ [HDR] Sets [Scale] of the luminance value.
Size	**Large**, Small	Sets the size of the display.
Reset		Resets the displayed content.
Export	The luminance information obtained when [Frame Luminance Monitor] is valid, is exported to the USB memory.	
Pixel Value Check[1, 7]	When [Gamma/EOTF] ➤ [SMPTE ST 2084 (PQ)] or [Hybrid Log-Gamma] The luminance and RGB value of the specified pixel (cursor) position are measured and displayed. The pixel value check can be used when the resolution is [4096x2160], [3840x2160], [2048x1080] or [1920x1080].	
Enable	On, **Off**	Switches the pixel value check On, Off.
H Position	1 to 4096 (**960**)	Sets the pixel position (horizontal).
V Position	1 to 2160 (**540**)	Sets the pixel position (vertical).
Reset Position	Normal **Around Peak Luminance**	Sets operation when the RESET button is pressed. [Normal]: Resets the value to the default value. [Around Peak Luminance]: Moves closer to the area of peak luminance inside the display image.

Sub Menu	Setting Options (Bold: factory default)	
Test Pattern[8]	White (1023), White (940), Gray, Black (64), Black (0), Ramp, Color Bars, Color Bars (PQ Full), Color Bars (PQ Limited), Color Bars (HLG), PLUGE, PLUGE (PQ/HLG), **Off**	Sets the test pattern built into the main unit.
Signal Monitoring[9]	Monitors the input signal status.	
Control	On, **Off**	Sets whether [Signal Monitoring] is used or not.
Error Hold	On (No time out) On (5 sec.) **Off**	Sets the length of time for displaying errors, when they are detected. [On (No time out)]: Errors continue to be displayed. To hide the displayed error, press the RESET button when closing the OSD menu. [On (5 sec.)]: The displayed error will disappear 5 seconds after the initial detection. [Off]: Only displays errors during the period when they are detected. The displayed error message will disappear once the error ends.
No Signal/Unsupported Signal	**On**, Off	Displays an error when there is [No Signal] or [Unsupported Signal].
2SI Link Order	**On**, Off	Displays an error when the cables inserted into the input terminals are in the wrong order when using signals input via [2 Sample Interleave].
V1711 SDI CRC Error	On, **Off**	Displays an error when an incorrect SDI signal is detected (CRC error).
V1711 8K 2SI Format	On, **Off**	Monitors the input signal status for the four terminals using the SDI signal when [Channel Settings] ❯ [Select Input Signal] is set to [Automatic].
V1711 8K 2SI Switching	On, **Off**	When there is no [8K 2SI Format] error, displays while switching video between each terminal (12G-SDI signal only).
Error Log		Displays error history.

Sub Menu	Setting Options (Bold: factory default)	
Screen Capture	Captures the screen.	
Capture		Captures the screen. The data is saved under the name "YYYYMMDD_hhmmss.bmp" or "YYYYMMDD_hhmmss.jpg" in the root folder of the USB memory.
Frame Hold	On, **Off**	Pauses the video.
Capture Source	**All** Video	Selects the sources to capture. [All]: Everything is captured including video assistance functions such as markers and wave form monitor as well as OSD menu. [Video]: Only video signals are captured.
File Type	Bitmap **JPEG**	Sets the File Type of the image to capture.
Create HDR/SDR Compare File	On, **Off**	Creates a file that lets you compare the brightness of HDR and SDR images on a computer. When saving, [_pc] is appended to the file name.
Playback File[10]	Select File Execute	Plays back captured images. [Select File]: Selects a file. [Execute]: Plays back the image.
Finish Playback File		Finishes playback.
Camera Link ➤	Sets the functions to link with Cinema EOS cameras and ARRI / Panasonic cinema cameras.	
Automatic Adjustment (CINEMA EOS)	When [Picture Mode] ➤ [CINEMA EOS SYSTEM], [Input Configuration] ➤ [6G/3G/HD-SDI (V1711 12-3G/HD-SDI)] or [3G-SDI RAW] Sets whether or not to link to the camera's image quality setting.	
	On, Off	Refer to the Setting Values Correspondence Table when [Color Gamut/Gamma/EOTF], [Color Temperature], and [Color Range] are all set to [On]. (📖95)
Color Gamut/Gamma/EOTF	**On**, Off	The image quality of the display corresponds to the camera's settings.
Color Temperature	**On**, Off	
Display Color Gamut	ITU-R BT.709 **ITU-R BT.2020** DCI-P3	Sets the color gamut shown on the display when the camera's [Color Space] is set to [Cinema Gamut] or [DCI-P3+].
Automatic Adjustment (ARRI)	When [Picture Mode] ➤ [User 6] to [User 7], [Input Configuration] ➤ [6G/3G/HD-SDI (V1711 12-3G/HD-SDI)] Sets whether or not to link to the camera's image quality setting.	
	On, Off	Refer to the Setting Values Correspondence Table. (📖96)
User LUT	**Rec2100-PQ-1K-100** Rec2100-HLG-1K-200 User LUT 1-8	When [Automatic Adjustment (ARRI)] ➤ [On] Sets the color gamut and gamma/EOTF shown in the display.

Sub Menu	Setting Options (Bold: factory default)	
Automatic Adjustment (VARICAM)	When [Picture Mode] ➤ [User 6] to [User 7], [Input Configuration] ➤ [6G/3G/HD-SDI (V1711 12-3G/HD-SDI)] Sets whether or not to link to the camera's image quality setting.	
	On, Off	Refer to the Setting Values Correspondence Table. (📖96)
User LUT	**V-Log to V-709** User LUT 1-8	When [Automatic Adjustment (VARICAM)] ➤ [On] Sets the color gamut and gamma/EOTF shown in the display.
Anamorphic	**On**, Off	When a Canon camera is connected, displays in accordance with the settings when anamorphic lens display settings are included in the camera metadata.
Area Marker[11]	ARRI Frame line 1A ARRI Frame line 1B **Off**	When an ARRI cinema camera is connected to this device, the [H Position], [V Position], [Width], and [Height] for the [Area Marker] change depending on the metadata.
Tally	**On**, Off	The display's tally lamp will illuminate in red when the camera starts recording. The tally lamp will go out when the camera stops recording.
Fan[12]	**On**, Off	Allows you to link stopping the fan to the camera's recording operation (For Cinema EOS cameras, Canon professional-use video cameras, or ARRI cinema cameras that are compatible with this video display). Set [System Settings] ➤ [Fan Control] to [On] to enable the fan to be stopped and then set [Fan] to [On] to stop the fan whenever the camera starts recording. At room temperature (25 °C), the fan remains off for approximately one minute (about 10 minutes when using DC power). The fan operates at a faster speed than usual before and after the fan is stopped to lower the internal temperature.
Camera Information	**Automatic** On Off	Sets conditions to display camera information. [Automatic]: Camera information is displayed for 4 seconds when the information has changed. [On]: Camera information is always displayed. [Off]: Camera information is not displayed.

[1] The information display functions that can be displayed vary depending on the video display's settings or the input signal status.

●: Can view —: Cannot view

	Time Code	Audio Level Meter	Wave Form Monitor	Vector Scope	Histo-gram	Frame Luminance Monitor	Pixel Value Check
With an SD-SDI signal	●	●	—	—	—	—	—
While zooming: When [Zoom] ➤ [Type] is set to [Normal]	●	●	—	—	—	—	—
When [Frame Hold] is [On] (For progressive signals)	—	—	●	●	●	●	●
When [Frame Hold] is [On] (For interlaced or PsF signals)	—	—	—	—	●	●	●
When [Peaking] ➤ [Enable] is set to [Peaking 1] or [Peaking 2]	●	●	—	—	●	●	●
During execution of [Playback File] under [Screen Capture]	—	—	—	—	—	—	—
When the display position and [Audio Level Meter] to be displayed is the same	—		●	●	●	●	●
When [Test Pattern] is displayed	—	—	—	—	—	—	—
When [Multi View (Quad)] is displayed	●	●	—	—	—	—	—
When [Multi View (Dual)] is displayed	●	●	●	●	—	—	—
When [Single Input Dual View] is displayed	●	●	●	●	●	●	—
When [Channel Settings] ➤ [Picture Mode] ➤ [Type] is set to [L/R]: When [Multi View (Dual)] or [Single Input Dual View] is displayed	●	●	●	●	—	—	—
When [Channel Settings] ➤ [Picture Mode] ➤ [Type] is set to [L/R], and when a single screen is being used	●	●	—	—	—	—	—
When [Picture Function Settings] ➤ [Compare View] ➤ [Enable] is set to [On]: When [Single Input Dual View] is set to [Off] and also the resolution is 4096x2160 or 3840x2160	●	●	—	—	—	—	—
When [Wave Form Monitor] is displayed: When [Wave Form Monitor] ➤ [Select Signal] is [R], [G], [B]	●	●	●	—	●	●	●
When [Wave Form Monitor] is displayed and [Wave Form Monitor] ➤ [Size] is [Large]: When the [Position] settings for [Wave Form Monitor] and [Vector Scope] are the same, or when using [Multi View (Dual)] / [Single Input Dual View] display	●	●	●	—	●	●	●
When an I/PsF 4K signal is displayed on one screen and when the [Wave Form Monitor] and [Vector Scope] [Position] settings are the same	●	●	●	—	●	●	●
When there is no signal or the input signal is not supported	●	●	●	●	—	—	—
When displaying video at resolutions other than 4096x2160 / 3840x2160 / 2048x1080 / 1920x1080	●	●	●	●	—	—	—

[2] • When [Multi View (Dual)] is displayed, the [H Offset] setting is invalid.
• [Type]: This setting becomes invalid when HDMI signal is input and is fixed to [VITC].

[3] [Position]: This setting becomes invalid in the [Multi View (Dual)] display.

[4] • V1711 When [Channel Settings] ➤ [Audio Input] is set to [Automatic]
- When displaying as [Multi View (Quad)], [Channel Number] becomes [2CH].
- When displaying as [Multi View (Dual)], [Channel Number] becomes [4CH].
• When [Channel Number (SDI)] is set to [8CH (1-4, 5-8)], if [Size] is set to [Large], the resulting display will be the same as for [8CH].

[5] [Size]: Fixed to [Small] during [Single Input Dual View].

[6] • The update time for [Frame Luminance Monitor] may take a long duration, or graph indication of [Frame Luminance Monitor] may be reset when displaying the [Frame Luminance Monitor] and operating the OSD menu.
• [Size]: Fixed to [Small] during [Single Input Dual View].

[7] It may take time to refresh when using the OSD menu while [Pixel Value Check] is displayed.

[8] • If the power is turned off once and then back on, the test pattern will not be displayed.
• The test pattern will be erased in the following cases:
- When calibration has been started
- When a channel is changed using the CH button, F button assigned for Channel UP/Channel DOWN, or [Select Channel] under [Channel Settings]
- When changing [Input Configuration] or [Select Input Signal] under [Channel Settings]
- When [Reset All Settings] is executed

[9] • [Signal Monitoring] cannot be used in the following cases:
- When [Single Input Dual View] is displayed
- When an enlarged image is displayed
- During display of the test pattern
- During execution of [Playback File] under [Screen Capture]
• When an error is displayed, [In Monitor Display] will not be shown.
• The position the error is displayed can be adjusted with [In Monitor Display] ➤ [Position].
• [8K 2SI Switching]: Does not operate in the following cases:
- When [Frame Hold] is [On]

[10] • When playing back captured images on other DP-V1710/DP-V1711 or PC, color may not be played back precisely.
• Cannot replay HDR/SDR comparison images with [_pc] in the file names.

[11] This cannot be displayed when [Marker Preset] is [Off].

[12] • If the temperature inside the main unit increases while the fan is off, the message [Fan will be rotated as the temperature is high.] is displayed and the fan starts rotating approximately ten seconds later. Since the temperature of the main unit has increased, the fan rotates faster than usual.
• The video display's fan may start rotating earlier than the camera because the temperature inside the main unit has increased.
• The fan may not stop in some conditions, for example when used at a high temperature.

■ Parameter of Cinema EOS cameras and video display

Cinema EOS cameras	DP-V1710 / DP-V1711	
Color Space	Color Gamut	Color Temperature
BT.709	ITU-R BT.709	D65
BT.2020	ITU-R BT.2020	D65
DCI-P3	DCI-P3	DCI-P3
DCI-P3+	DCI-P3+ to 709	D65
	DCI-P3+ to DCI-P3	DCI-P3
Cinema Gamut	Cinema Gamut to 709	D65
	Cinema Gamut to 2020	D65
	Cinema Gamut to DCI-P3	DCI-P3
RAW Gamut	Cinema Gamut to 709	D65
	Cinema Gamut to 2020	D65
	Cinema Gamut to DCI-P3	DCI-P3

Cinema EOS cameras	DP-V1710 / DP-V1711	
Gamma/EOTF	Gamma/EOTF	HDR Range
Canon Log	Canon Log (HDR)	—
Canon Log 2	Canon Log 2 (HDR)	
RAW Gamma		
Canon Log 3	Canon Log 3 (HDR)	
ST 2084, PQ	SMPTE ST 2084 (PQ)	1000
Normal (BT.709)	2.2	—
Wide DR		
EOS Std.		
DCI-P3	2.6	

■ Parameter of ARRI Cinema camera and video display

ARRI Cinema camera	DP-V1710 / DP-V1711				
Color Space	Display Color Gamut	CDL/ User LUT	Color Gamut	Gamma/EOTF	HDR Range
REC 709	—	—	ITU-R BT.709	2.2	—
REC 2020	—	—	ITU-R BT.2020	2.2	—
Wide Gamut Log C	Rec2100-PQ-1K-100	ARRI (Rec2100-PQ-1K-100)	ITU-R BT.2020	SMPTE ST 2084 (PQ)	1000
	Rec2100-HLG-1K-200	ARRI (Rec2100-HLG-1K-200)	ITU-R BT.2020	Hybrid Log-Gamma	—
	User LUT 1-8	User LUT 1-8	—	—	—

■ Parameter of Panasonic Cinema camera and video display

Panasonic Cinema camera	DP-V1710 / DP-V1711				
Color Space	Display Color Gamut	CDL/ User LUT	Color Gamut	Gamma/EOTF	HDR Range
V-709	—	—	ITU-R BT.709	2.2	—
V-Log	V-Log to V-709	VARICAM (V-Log to V-709)	ITU-R BT.709	2.2	—
	User LUT 1-8	User LUT 1-8	—	—	—

Picture Function Settings

This menu is used to set video assistance functions, for example.

Sub Menu	Setting Options (Bold: factory default)	
Peaking[1]	The outline is displayed in a color, used to check the focus. Customizes peakings which are assigned to Peaking 1 or Peaking 2.	
Enable	Peaking 1 Peaking 2 **Off**	Switches the peaking display mode and also sets peaking to Off.
Monochrome	When [Peaking 1] **On**, Off When [Peaking 2] On, **Off**	Displays video in monochrome.
Frequency	When [Peaking 1] Low, **Middle**, High When [Peaking 2] Low, Middle, **High**	Sets the central frequency of contour enhancement signals.
Range	-3 ~ 3 (**0**)	Sets the width of the range to be colored.
Color	White, **Red**, Green, Blue, Yellow, Cyan, Magenta	Sets the color to be used.
False Color[2]	Displays different colors for the video's brightness levels to make it easier to check the exposure and brightness distribution. Customizes the false color and sets it to false color 1 or false color 2.	
Enable	False Color 1 False Color 2 **Off**	Switches between False Color display mode and non-display.
Type	**Automatic** IRE SMPTE ST 2084 (PQ) Hybrid Log-Gamma	Sets the tint color display method. [Automatic]: Sets in accordance with the [Gamma/EOTF] settings.
HDR/SDR Border	100, **200**	Sets the boundary value for the SDR/HDR areas.
Range - SDR	When [False Color 1] On, **Off** When [False Color 2] **On**, Off	Sets whether to tint the SDR area. When [On], sets the size of the area to be tinted. (increments of 10) Monochrome/Brown: 10 to 190 (90*) (**40**) Brown/Monochrome: 20 to 200 (100*) (**80**) * When [HDR/SDR Border] is [100]

Sub Menu	Setting Options (Bold: factory default)	
Range - HDR	When [False Color 1] Automatic Automatic (Over Range) **Manual** When [False Color 2] **Automatic** Automatic (Over Range) Manual	Sets the tint color range. [Automatic]: Sets the upper limit automatically in accordance with the [Gamma/EOTF] settings. When [Manual] or [Automatic (Over Range)] is selected, sets the size of the area to be colored. • Setting when [SMPTE ST 2084 (PQ)] (100 to 1000: 10 increments, 1000 to 4000: 100 increments, 4000 to 10000: 1000 increments) Blue/light blue: 250 (150*) to 400 Light blue/green: 400 to 1000 Green/yellow: 600 to 4000 Yellow/orange: 800 to 8000 Orange/red: 1000 to 10000 (Only when using [Manual]) • Setting when [Hybrid Log-Gamma] (10 increments) Blue/light blue: 250 (150*) to 300 Light blue/green: 300 (200*) to 500 Green/yellow: 400 (300*) to 700 Yellow/orange: 500 (400*) to 900 Orange/red: 600 (500*) to 1000 (Only when using [Manual]) * When [HDR/SDR Border] is [100]
Over Range[3]	Displays video in monochrome, with the areas where the set range is exceeded are shown tinted.	
Enable	On, **Off**	Switches the [Over Range] On, Off.
Range (HDR)	**Automatic**, Manual	[Automatic]: When [Gamma/EOTF] ❯ [SMPTE ST 2084] or [Hybrid Log-Gamma], only the areas that exceed the [HDR Range] setting are tinted. [Manual]: Only areas that exceed the range set at [SMPTE ST 2084 (PQ)] or [Hybrid Log-Gamma] are tinted.
SMPTE ST 2084 (PQ)	100 to 10000 (**1000**)	Sets the tint color range. (100 to 1000: 10 increments, 1000 to 4000: 100 increments, 4000 to 10000: 1000 increments)
Hybrid Log-Gamma	100 to 1000 (**1000**)	Sets the tint color range. (10 increments)
Range (SDR)	512 to 1023 (**940**)	Sets the tint color range. (1 increments)
2020 Outside of Gamut View[3]	When [Picture Mode] or [Color Gamut] ❯ [ITU-R BT.2020] Displays video in monochrome, with the areas where the color gamut exceeds the selected color gamut shown in red.	
Enable	On, **Off**	Switches between On and Off for [2020 Outside of Gamut View].
Color Gamut	**ITU-R BT.709** Native	Sets the [Color Gamut] to be set as out of color gamut.
Range	0 to 512 (**0**)	Sets the range when tinting dark areas. (1 increments) 0: Tints all dark areas. 512: Dark areas at the set values or less are not tinted.

Sub Menu	Setting Options (Bold: factory default)	
Monochrome[4]	On, **Off**	Video is displayed in monochrome.
Blue Only[5]	On, **Off**	Cuts red and green signals, and displays only blue signals in monochrome.
Red Off[4]	On, **Off**	Video is displayed with red signals cut.
Green Off[4]	On, **Off**	Video is displayed with green signals cut.
Blue Off[4]	On, **Off**	Video is displayed with blue signals cut.
Compare View[6]	Images having different image quality settings are displayed on the left and right screens for comparison. (When [Picture Mode] for left and right screens is the same)	
Enable	On, **Off**	Sets Comparison mode On or Off.
Type	**Automatic** HDR/SDR CDL/User LUT	Sets the type of the image to compare. [Automatic]: [HDR/SDR] when [Adjustment] ➤ [CDL/User LUT] is [Off], otherwise set at [CDL/User LUT]. [HDR/SDR]: HDR and SDR images are displayed. [CDL/User LUT]: The image on which [CDL] or [User LUT] is applied is displayed only in the left screen.
HDR/SDR Convert Method	**2020 HDR to 709 SDR** 2020 HDR to 2020 SDR User LUT 1-8 Off	When [Type] is set to [HDR/SDR] or [Automatic ([HDR/SDR])] Sets the display method of the screen set to SDR. [2020 HDR to 709 SDR], [2020 HDR to 2020 SDR]: Setting differs according to the [Gamma/EOTF] settings. [SMPTE ST 2084 (PQ)]: The [User LUT] corresponding to each setting is applied. [Hybrid Log-Gamma]: The [User LUT] corresponding to each setting is applied. [Canon Log(HDR)], [Canon Log 2(HDR)], [Canon Log 3(HDR)]: [Canon Log], [Canon Log 2] or [Canon Log 3] is applied. [S-Log2 (HDR)], [S-Log3 (HDR)]: [HDR Range] setting [100] is set. [User LUT 1-8]: The specified [User LUT] is applied. After applying [User LUT] the adjustment inside the display fixes [Color Gamut] at [ITU-R BT.709] and [Gamma/EOTF] at [2.4]. [Off]: Only brightness is lowered.
Contrast (SDR)	500 to 2000 (**1000**)	When [Type] is set to [HDR/SDR] or [Automatic ([HDR/SDR])] Adjusts the SDR contrast.
Color Temperature (SDR)	**Normal**, D93, D65, D65 Custom, DCI-P3	When [Type] is set to [HDR/SDR] or [Automatic ([HDR/SDR])] Sets the SDR color temperature.
Gain (SDR)	-15 to 15 (**0**)	When [Type] is set to [HDR/SDR] or [Automatic ([HDR/SDR])] Sets the SDR gain.

Sub Menu	Setting Options (Bold: factory default)	
User LUT Target 1	User LUT 1 to User LUT 8, **Off**	When [Type] is set to [CDL/User LUT] or [Automatic ([User LUT])] Sets the comparison target.
V1711 User LUT Target 2 (Quad)	User LUT 1 to User LUT 8, **Off**	When [Type] is set to [CDL/User LUT] or [Automatic ([User LUT])] Sets the comparison target. [User LUT 1-8]: Applies the User LUT separately for each quarter screen and displays comparisons when displaying [Multi View (Quad)].
V1711 User LUT Target 3 (Quad)	User LUT 1 to User LUT 8, **Off**	

1
- [Peaking] cannot be displayed during the execution of [Playback File] under [Screen Capture].
- Cannot set when [Compare View] ➤ [Enable] is [On].
- [Enable] changes to [Off] when the power is turned on again.

2
- [False Color] cannot be displayed during the execution of [Playback File] under [Screen Capture].
- Cannot set when [Compare View] ➤ [Enable] is [On].
- [Enable] changes to [Off] when the power is turned on again.
- When [IRE] in [Type] is selected, [HDR Range] settings become invalid.

3
- Cannot set when [Compare View] ➤ [Enable] is [On].
- [Enable] changes to [Off] when the power is turned on again.

4
- Cannot set when [Compare View] ➤ [Enable] is [On].
- When the power is turned off and on, becomes [Off].

5
- [Blue Only] cannot be set when [CDL/User LUT] is a setting other than [CDL 1-8] or [Off].
- Cannot set when [Compare View] ➤ [Enable] is [On].
- When the power is turned off and on, becomes [Off].

6
- [Compare View] cannot be set in the following cases:
  - When [Channel Settings] ➤ [Picture Mode] ➤ [Type] ➤ [L/R]
  - When [Peaking], [False Color], [Over Range] or [2020 Outside of Gamut View] ➤ [Enable] ➤ [On]
  - When [Monochrome], [Blue Only], [Red Off], [Green Off] or [Blue Off] ➤ [On]
  - For SD-SDI signals
- When a signal with a resolution of 2K or smaller is displayed on a single screen, changes to [Single Input Dual View].

Network/IMD Settings

Sub Menu	Setting Options (Bold: factory default)	
LAN[1]	Configures video display's network settings.	
Configure an IP Address	**Automatic** Manual	[Automatic]: Configures an IP address automatically with DHCP/Auto IP. [Manual]: Configure an IP address and subnet mask manually.
Display		192.168.0.1
Subnet Mask		255.255.255.0
Wi-Fi	This is used to connect the video display to a network using Wi-Fi and control it from an external control device. (📖43)	
Control	Infrastructure Access Point **Off**	Sets the Wi-Fi connection method. [Infrastructure]: This method connects to Wi-Fi via an access point. [Access Point]: This device acts as an access point, and this method connects the device directly to the Wi-Fi device.
Infrastructure		Sets the access point to connect to. At factory settings, the access point to connect to is not configured.
Password		You may specify a password if needed by using up to 24 alpha-numerical characters and symbols. The default password is blank.
Access Point		Configures the access point.
SSID		Enter the SSID. This can be set using up to 24 alpha-numerical characters and symbols.
Frequency	2.4 GHz, **5.0 GHz**	Sets the communication mode.
Channel	When [2.4 GHz] **1** to 13 (increments of 1) When [5.0 GHz] 36, 40, **44**, 48	Sets the channel to use for communication.
Password		Enter the password. This is set using between 8 and 24 alpha-numerical characters and symbols. Remember to change the default password. The default password is the serial number. The serial number is the individual 12-digit number assigned to your product, and can be checked on the [System Information] screen.
Web	Settings for operating this device remotely using a Web browser. (📖45)	
Control	On, **Off**	Set whether or not to receive control signals from an external device, connected using network connection or Wi-Fi connection, in order to operate the video display remotely from the device's web browser.
User ID		Enter the user ID. This is set using up to 16 alpha-numerical characters and symbols. The default user ID is [user].
Password		Enter the password. This is set using between 8 and 16 alpha-numerical characters and symbols. The default password is the serial number. The serial number is the individual 12-digit number assigned to your product, and can be checked on the [System Information] screen.

Sub Menu	Setting Options (Bold: factory default)	
Display Setting Link[2]	Adjustment Channel Adjustment/Channel **Off**	Settings are linked between displays connected via LAN. This device's setting values are applied to all linked displays. * Before linking settings, check that the following conditions are met. ① Turn on the power to this display and the display(s) to link with, and check that they are all recognized on the network ② Change the adjustment or channel and check that the other display(s) also change The devices and firmware versions that can be linked are shown below. DP-V2410: Version 1.4 or higher DP-V2420 / DP-V2421: Version 1.3 or higher DP-V1710 / DP-V1711: Version 1.3 or higher DP-V2411: Version 1.2 or higher Displays not connected can be removed with the RESET button.
In Monitor Display	The video display supports Television Systems Ltd.'s "TSL UMD Protocol Ver. 5.0". You can operate the video display using an external device connected to the LAN terminal and display characters and tally lights on the screen. You can input any characters you like directly from this video display. (📖42)	
Control	**TSL Ver. 5.00** Manual Off	Sets whether or not to receive the control signal from the connected device. [Manual]: Select to input the characters on this video display. Does not receive a control signal from the connected device.
Position	Top **Bottom**	This sets whether the characters and tally lights will be displayed at the top or the bottom.
Manual Display Type[3]	**Automatic** Single Dual A,B, Dual C,D Quad A,B,C,D	[Automatic]: Changes display in accordance with the Input Configuration. [Single]: Single-screen display. [Dual A,B], [Dual C,D]: Dual-screen display. [Quad A,B,C,D]: Quadruple-screen display.
Manual String	(Single) (Dual/Quad A) (Dual/Quad B) (Dual/Quad C) (Dual/Quad D) (Single Dual L) (Single Dual R)	When [Control] ➤ [Manual] Sets the characters to display for the selected [Manual String]. You can input up to 16 alphanumeric characters.

[1] Cannot be set when [Power on Setting] is [User 1] to [User 3].

[2]
- Operating the GPI or the buttons on this display will reflect setting value changes in all. Linked operations using Payload ID, HDMI, Camera, etc. will not reflect the settings changes.
- If a display model has functions with different menu settings or setting ranges, some settings will not be correctly exported (settings will not be changed, will revert to factory defaults, etc.)
- In an environment where communication cannot be done properly, such as when the network environment is unstable or the bandwidth is insufficient, settings may not link properly. Only connect displays to be controlled to the LAN. If a Display Controller is connected, it may not operate properly.
- Up to 32 displays can have their settings linked.

[3] When [Function Settings] ➤ [Signal Monitoring] ➤ [Control] is set to [On] then [Manual Display Type] is fixed to [Automatic].

System Settings

This menu is used to configure settings related the system of the video display.

Sub Menu	Setting Options (Bold: factory default)	
Function/Channel Button	Sets the function or channel to assign to the F buttons or CH button.	
Display Function/ Display Function (CDL)	Sets the function to assign to the F buttons of the main unit (📖37). Select an F button and assign a function from the following list (📖108).	
Display Channel	Sets the channel to assign to the CH button on the display.	
CH1	CH1 to CH20 (**CH1**)	Select a CH button and register a channel number. A list of settings under the menu [Channel Settings] (📖69) is displayed.
CH2	CH1 to CH20 (**CH2**)	
CH3	CH1 to CH20 (**CH3**)	
Remote(GPI)[1]	You can operate the video display using an external controller such as a switcher that has been connected to the REMOTE terminal. Operates by connecting (shorting) the GND (No. 8 Pin) to No.s 1 to 7.	
Type	**Level**, Short Edge	[Level]: Operates while shorted. [Short Edge]: Switches between “operate”/”do not operate” for each short.
Pin1 ~ Pin7	Assigns functions in each GPI pin. (📖41) Functions that can be registered[2]: SMPTE-C, EBU, ITU-R BT.709, ITU-R BT.2020, Adobe RGB, DCI-P3, User 1 (2020 PQ), User 2 (2020 HLG), User 3 (DCI PQ), User 4 (DCI PQ D65), User 5 ~ User 7, CINEMA EOS SYSTEM, ACESproxy (ver. 1.0.1), CH1 to CH5, Aspect Marker, Safety Zone Marker 1/2, Area Marker, Center Marker, Grid Marker, Time Code, Audio Level Meter, Wave Form Monitor, Vector Scope, Histogram, Frame Luminance Monitor, False Color 1/2, Compare View, MENU, Tally Green, Tally Red, Power On, — (Not set) Functions with valid settings: Aspect Marker, Safety Zone Marker 1/2, Area Marker, Center Marker, Grid Marker, Time Code, Audio Level Meter, Wave Form Monitor, Vector Scope, Histogram, Frame Luminance Monitor, False Color 1/2, Compare View ❖ About [Tally] A tally appears at the top of the screen. Combining [Tally Green] and [Tally Red] makes [Tally Amber].	
Language	**English** 日本語 简体中文	Sets the language of the OSD menu and messages.
Date/Time		Sets the year/month/date/hour/minute.

Sub Menu	Setting Options (Bold: factory default)	
Display Name	Sets the name of the main unit. You can input up to 16 alphanumeric characters.	
OSD Settings		
Banner	Sets the banner display method for the channel name, signal information, and status of the video display.	
Automatic Display	**On**, Off	Automatically displays the banner when the input signal or picture mode are changed.
Picture Mode	**On**, Off	Sets whether to display [Picture Mode].
Time Out	**On**, Off	The banner automatically disappears.
Function Button Guide	**On**, Off	[On]: When all OSD are hidden, you can display the list of functions assigned to an F button on the video display by pressing the jog dial. [Off]: Function Button Guide is not displayed.
OPTION OSD Brightness	**Automatic (High - Middle)** Automatic (High - Low) High Middle Low	Sets the brightness of the OSD. The brightness is automatically adjusted to suit the screen contrast when [Automatic] is selected. You can choose between [High - Low] and [High - Middle] adjustment ranges.
Protect Settings	Locks the settings so they cannot be changed. When you press the MENU button, [Signal/System Information] appears, but other operations are grayed out because they are locked.	
Password		Set a password to protect settings. Use a four-digit number (0000 to 9999). The initial password is blank.
Protect Target		You can remove Picture Mode and Select Channel from the items to be protected.
Picture Mode	**On**, Off	[On]: Protects the [Picture Mode] settings. [Off]: Removes the [Picture Mode] settings from protect target.
Select Channel	**On**, Off	[On]: Protects the [Select Channel] settings. [Off]: Removes the [Select Channel] settings from protect target.
Function Settings	**On**, Off	[On]: Protects the [Function Settings] settings. [Off]: Removes the [Function Settings] settings from protect target.
Protect		Select [OK] to protect. When a password has been set, enter the password and select [OK]. ❖ Unlocking Protect Settings Move the selection frame to [Protect] and press the Jog dial for approximately 3 seconds. When a password has been set, enter the password and select [OK].

Sub Menu	Setting Options (Bold: factory default)	
Power Indicator/Button LED Settings		
Power Indicator Brightness	Off 1 to 5 (**3**)	Adjusts the brightness of the power indicator on the main unit. The greater the number is, the greater the brightness.
Display Button LED	**On**, Off	Sets the F buttons and the lamp on the face.
Button Name Lighting Time (sec.)	**60**, 30, 10, 5	Sets the time (sec) until the lamp on the face goes out if no operation is performed.
Fan Settings	Sets the operation of internal fan.	
Fan Control	On, **Off**	Fan noise can be eliminated when the main unit is used during shooting or when silent operation is needed. Set this in advance to stop the fan either manually or by linking it with the camera during photography (📖92). When this is set to [On], the mode changes so that the fan can be stopped.
Fan Stop[3]	On, **Off**	If [Fan Stop] is set to [On] and when [Fan Control] is set to [On], the fan can be stopped. At room temperature (25 °C), the fan remains off for approximately one minute (about 10 minutes when using DC power). The fan operates at a faster speed than usual before and after the fan is stopped to lower the internal temperature.
Compatible Settings	Sets compatibility with HDMI devices and operation of functions that differ according to the version of the video display's firmware.	
HDMI	**Normal** Compatible 1 Compatible 2	[Normal]: All formats are supported. [Compatible 1]: Set this option when video is not played correctly in [Normal]. HDR signals of a luminance higher than that of the display main unit are not supported. [Compatible 2]: Set this option when video is not played correctly in [Normal] or [Compatible 1]. [4K50.00P/60.00P] and HDR signals are not supported.
Color Range	**Normal** Compatible	[Normal]: Sets the [Color Range] setting to new types in firmware Version 1.2 or later for this video display. [Compatible]: Sets the [Color Range] setting to conventional types in firmware Version 1.1 or earlier for this video display.
Backlight Control	**Normal** Compatible	[Normal]: Increases HDR video visibility compared with the firmware Version 1.1 or earlier for this video display. [Compatible]: Shows the same display as with the firmware Version 1.1 or earlier for this video display.
Reduce Backlight Flash	**On**, Off	When [Adjustment] ❯ [Backlight Control] is set to an option other than [Off], the screen may exhibit a flash in cases such as switching between scenes with a large difference in luminance. You can use [Reduce Backlight Flash] to reduce this phenomenon.
V1711 User LUT[4]	**Normal** Compatible	[Normal]: Information display for videos such as waveform monitors depends on the status following application of User LUT. [Compatible]: Information display for videos such as waveform monitors depends on the status before application of User LUT.
Firmware/License Update	This function is used to update the video display firmware or to apply the license file. Refer to the Canon website for detailed information.	

Sub Menu	Setting Options (Bold: factory default)	
Export/Import[5]	Sets the export/import main menu settings.	
Export		
Target	**USB** User 1 to User 3 LAN	Select the export destination. [USB]: Export to a USB memory. [User 1] to [User 3]: Export to the built-in memory of the main unit. [LAN]: Exports to a display connected with a LAN.
Filename		When [Target] ➤ [USB] or [User 1-3] Factory default is "dinfo_dpv1710.dat" (V1711 [dinfo_dpv1711.dat]). You can change the name of the file to be exported to the USB memory within 16 one-byte characters including alphabetical characters, numbers, and symbols.
Display		When [Target] ➤ [LAN] Select the display with the settings to export from the displays connected via LAN.
Execute		Performs export.
Import		
Target	**USB** User 1 to User 3	Specify the destination to save the file to be imported.
Filename		Displays files with the extension ".dat" so you can select from among them.
Settings	All Adjustment Channel Settings Display Settings Audio Settings Marker Settings Function/Network/ System Settings	Select the settings to import.
Execute		Performs import.
Power on Setting	**Last memory** User 1 to User 3	You can select the state of the display when the power is turned on. [Last memory]: Launches with the same settings as when the power was turned off the previous time. [User 1] to [User 3]: It starts up with the settings saved in [User 1] to [User 3] under [Export].
Reset All Settings	OK **Cancel**	Returns all settings to factory default. When selected, the message [Reset all settings to factory defaults?] appears. [OK]: Performs reset. [Cancel]: Returns to the previous screen without resetting.

[1] • This function will not work correctly in the following cases.
- If the same function is assigned to multiple pins.
- If the changes to the [Remote(GPI)] setting and the pin assignments were made when the pins were shorted.

[2] • Markers: The marker cannot be displayed when [Marker Preset] is set to [Off].
• [Power On]: Can only be registered to [Pin7].

[3] • If the message [Invalid operation due to high temperature.] is displayed, the fan cannot be stopped even when [On] is selected for this item. Wait until the internal temperature lowers.
• If the temperature inside the main unit increases while the fan is off, the message [Fan will be rotated as the temperature is high.] is displayed and the fan starts rotating approximately ten seconds later. Since the temperature of the main unit has increased, the fan rotates faster than usual.
• Select [Off] to restart the fan. The fan rotates faster than usual.
• The fan may not stop in some conditions, for example when used at a high temperature.

[4] • [User LUT]: When [Picture Function Settings] ❯ [Compare View] ❯ [Enable] is set to [On], fixes as [Normal].

[5] • The following settings cannot be exported or imported.

Adjustment	Target values of Calibration (including calibration results)
Display Settings	Zoom Preset, Frame Hold
Picture Function Settings	Peaking (Enable), False Color (Enable), Over Range (Enable), 2020 Outside of Gamut View (Enable), Test Pattern, Monochrome, Blue Only, Red Off, Green Off, Blue Off, Compare View (Enable)
Network/IMD Settings	LAN, Wi-Fi, Display Setting Link (LAN and Wi-Fi: only export/import via network)
System Settings	Date/Time, Fan Stop, Export/Import, Power on Setting

• User LUT data cannot be exported or imported to [User 1] to [User 3] under [Target].
• Data exported from this product may not be imported to products of which firmware version is earlier than the version of this product. To import data, update the firmware to the latest version.

■ Function to allow registration for the display F buttons (📖103)

Item	Options
Adjustment	Picture Mode
	Contrast
	Brightness
	Chroma
	Chroma Up
	Sharpness
	Backlight Control
	Gamma/EOTF
	HDR
	HDR Range
	Boost Contrast OPTION
	HDR/SDR View
	Gain
	Bias
	xy
Picture Mode	SMPTE-C
	EBU
	ITU-R BT.709
	ITU-R BT.2020
	Adobe RGB
	DCI-P3
	User 1 (2020 PQ)
	User 2 (2020 HLG)
	User 3 (DCI PQ)
	User 4 (DCI PQ D65)
	User 5 ~ User 7
	CINEMA EOS SYSTEM
	ACESproxy (ver. 1.0.1)
CDL/User LUT	CDL/User LUT
	CDL RGB
	CDL R
	CDL G
	CDL B
	CDL SOP/SAT
	CDL Slope
	CDL Offset
	CDL Power
	CDL Saturation
	CDL/User LUT Bypass
	CDL Export/Import

Item	Options
Channel Settings	Channel UP[1]
	Channel DOWN[1]
	Select Input Signal
	Audio Input
	Single Input Dual View
	CH1 to CH20
Display Settings	Screen Scaling
	Anamorphic
	Scaling Method
	Zoom Preset
	Zoom 1
	Zoom 2
	Zoom 3
	Frame Hold
Audio Settings	SDI Group
	CH L
	CH R
	Volume
	Audio Switch
Marker Settings[2]	Marker Preset
	Marker 1
	Marker 2
	Marker 3
	Marker 4
	Marker 5
	Aspect Marker
	Safety Zone Marker 1
	Safety Zone Marker 2
	Area Marker
	Center Marker
	Grid Marker
Function Settings	TC/ALM
	Time Code
	Audio Level Meter
	WFM/VEC
	Wave Form Monitor
	WFM Select Signal
	Vector Scope
	Histogram/Frame Luminance
	Histogram
	Frame Luminance Monitor
	Pixel Value Check

Item	Options
Function Settings	Signal Monitoring Log
	Capture
	Camera Information
Picture Function Settings	Peaking
	Peaking 1
	Peaking 2
	False Color
	False Color 1
	False Color 2
	Over Range
	2020 Outside of Gamut View
	Monochrome
	Blue Only
	Red Off
	Green Off
	Blue Off
	Compare View
System Settings	Signal Information
	Hide OSD[3]
	Fan Stop

[1] When changing channels with [Channel UP/DOWN], the channels with [Input Configuration] (📖69) set to [–] are skipped.

[2] When any marker settings are changed using an F button, those changes will be applied to [Enable] under the currently selected [Marker Preset].

[3] [Hide OSD] is a function to hide all OSD. When [On] is selected, OSD and [Separator] are hidden but the menu can be used.

Signal Information

Shows the signal information. When [Select Input Signal] is [Quad Input], information for the entire signal and each input is displayed. Select a signal with the jog dial according to the guide at top right corner of the menu. When signal information has been obtained although it is not displayed on the screen, the content of the information is grayed out.

SDI Signal		HDMI Signal	
Item	Display Example	Item	Display Example
Channel	CH1	Channel	CH4
Input Configuration	6G/3G/HD-SDI (3G-A)	Input Configuration	HDMI
Select Input Signal	Quad Input	Format	Automatic
Image Division	Automatic	Resolution	4096x2160
Format	Automatic	Picture Rate, I/P/PsF	60.00P
Resolution	4096x2160	Pixel Encoding, Color Depth	4:2:2 YCbCr 10-bit
Picture Rate, I/P/PsF*	24.00P	Matrix	ITU-R BT.709
SDI Payload ID	89 C3 46 01	Range	Full
Video Standard	3G-SDI	EOTF	SMPTE ST 2084 (PQ)
Sampling Structure, Bit Depth	4:4:4:4 GBRA 10-bit	Max Luminance (Peak/Avg.)	1000 / 500 cd/m^2
Picture Rate	24.00	Display Luminance (Max/Min)	1000 - 0.005 cd/m^2
Scanning Method	Progressive/Progressive (Transport/Picture)	White Point	x=0.313, y=0.329
		Primary Color Red	x=0.640, y=0.330
Link Number	Single/Link_1	Primary Color Green	x=0.300, y=0.600
Colorimetry	UHD	Primary Color Blue	x=0.150, y=0.060
Transfer Characteristics	SDR-TV		

* When a content is grayed out, an asterisk [*] may be displayed indicating low [Picture Rate] accuracy such as [24.00P *].

System Information

Shows the video display status and network information.

Item	Display Example
Display	DP-V1710
Serial No.	000000000000
Firmware/License Ver.	1.3
Usage Time*	5 h
IP Address	192.168.0.1
Subnet Mask	255.255.255.0
MAC Address	FF:FF:FF:FF:FF:FF
Wi-Fi IP Address	192.168.0.1
Wi-Fi Subnet Mask	255.255.255.0

* The [Usage Time] is not always [0] when you purchase the display due to factory inspection.

Main specifications/Performance

Panel		
Panel Type		IPS LCD panel
Screen Size		17.3 inch (43.8 cm)
Aspect Ratio		16:9
Resolution		3840x2160 (8.3 megapixels)
Active Display Area		Approximately 381.9 x 214.8 mm
Pixel Pitch		99 μm/255 ppi
Image quality		
Brightness (Standard)		100 cd/m^2
View Angle (Up, Down, Left, Right)		89° (contrast ratio 10 : 1 or higher)
Surface Treatment		Anti-glare coating
General		
Backlight Type		LED, direct down type
Power		Rated Voltage: 100 – 240 V AC Rated Frequency: 50/60 Hz 12 V DC Max. 10 A, XLR terminal
Power consumption		At maximum load (including change in brightness through aging): Approximately 140 W At factory shipment: Approximately 85 W
Environmental Conditions	Operating	Temperature and humidity: 0 – 40 °C (32 – 104 °F), 20 – 85 %RH (no condensation) recommended: 15 – 30 °C (59 – 86 °F) Pressure: 700 – 1060 hPa
	Storage/ Transporting	Temperature and humidity: -20 – 40 ˚C (-4 – 104 °F), 20 – 85 %RH (no condensation) 41 – 60 ˚C (105 – 140 °F), 20 – 30 %RH (no condensation) Pressure: 700 – 1060 hPa
Dimensions (width x height x depth)		Including stands and handle: Approx. 435×356×194 mm (17.1×14.0×7.6 in.) Main unit only, excluding protrusions: Approx. 435×308×154 mm (17.1×12.1×6.1 in.)
Weight		Approximately 8 kg (17.6 lb)
Mounting Hole Pitch		VESA standard 100 x 100 mm (3.9 x 3.9 in.)

Interface		
Input	V1710 6G/3G/HD/SD-SDI V1711 12G/6G/3G/HD/SD-SDI	4 (1 systems) BNC (75Ω) receptacle terminal V1711 12G-SDI: Compliant with SMPTE 2082 6G-SDI: Compliant with SMPTE 2081 3G-SDI: Compliant with SMPTE 2048-2/274M/296/372/425-5/425-3/425-1/428-19/428-9 HD-SDI: Compliant with SMPTE 2048-2/274M/292-1/296/428-19/428-9 SD-SDI: Compliant with SMPTE 259M
	HDMI	1 (1 system) type A terminal Contents protection standard: HDCP 2.2
Output	V1710 6G/3G/HD-SDI V1711 12G/6G/3G/HD-SDI	4 (1 pass-thru systems)
	Head phone	1 stereo mini jack, Supported impedance: 32 Ω to 64 Ω
Others	USB	1 USB A receptacle terminal Universal Serial Bus Specification Revision 2.0 compliant LS (Low Speed)/FS (Full Speed)/HS (High Speed) mode compatible Compliant with Enhanced Host Controller Interface Specification for Universal Serial Bus Revision 1.0
	LAN	1 RJ-45 terminal Compliant with IEEE802.3 10BASE-TX/IEEE802.3u 100BASE-TX
	REMOTE	1 RJ-45 terminal, GPI 8 pins

Weight and dimensions are approximate. Error and omissions excepted.
The information in this manual is verified as of November 2022. It is subject to change without notice.

Dimensions

Front

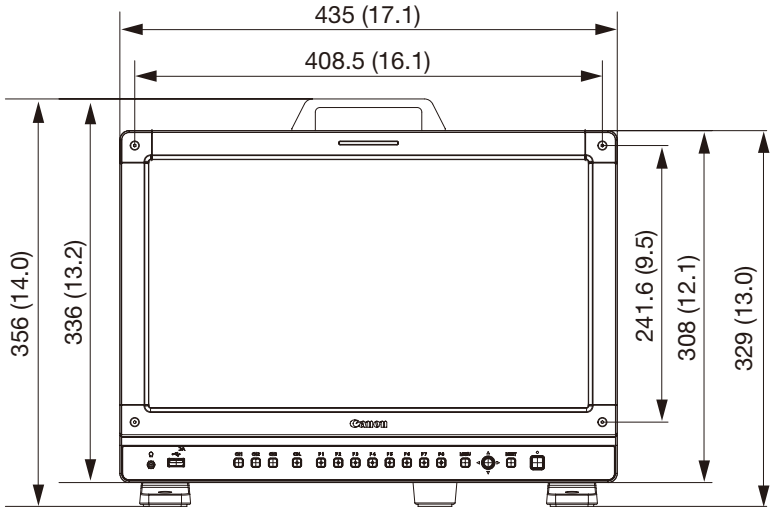

Rear

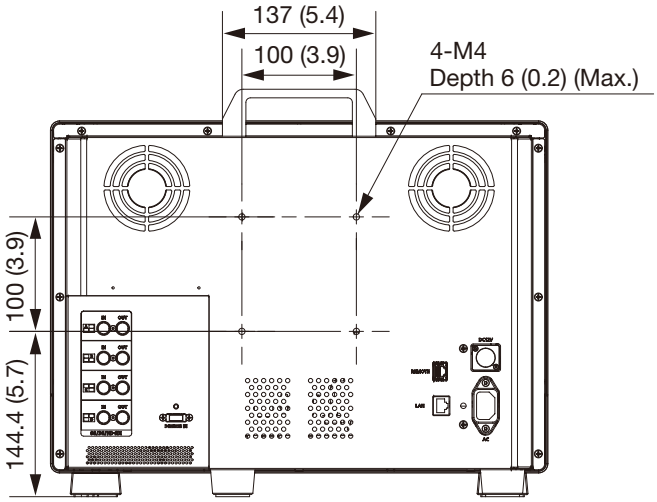

Side

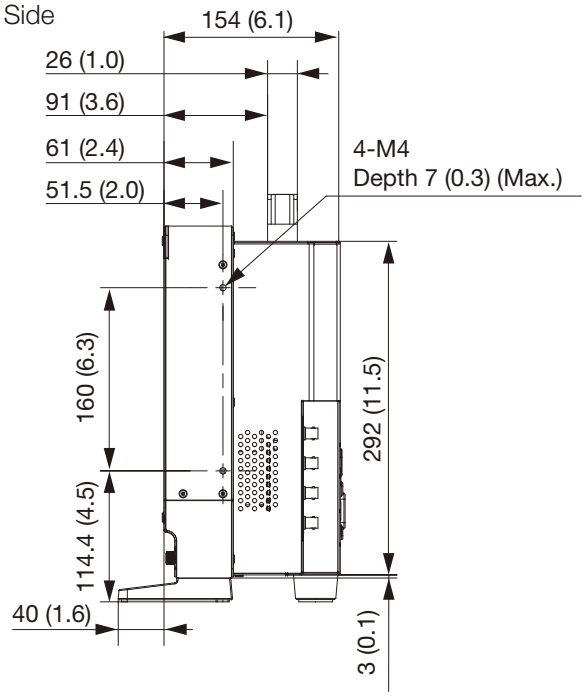

Bottom

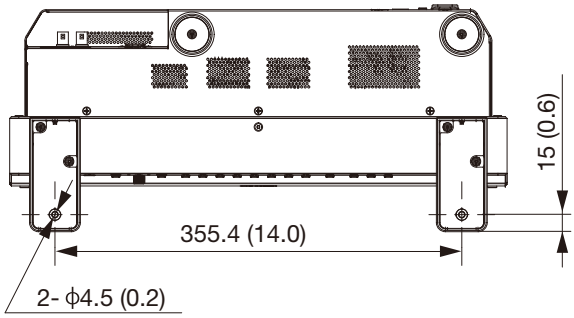

Unit: mm (inch)

■ RB-02 Rack Mount Bracket (sold separately)

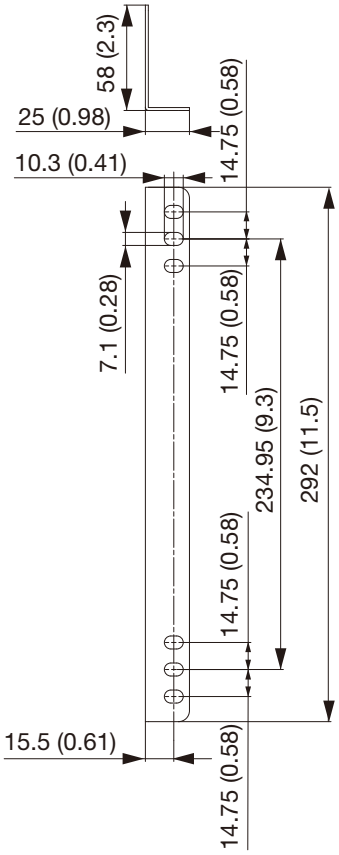

When mounted on the RB-02 Rack Mount Bracket

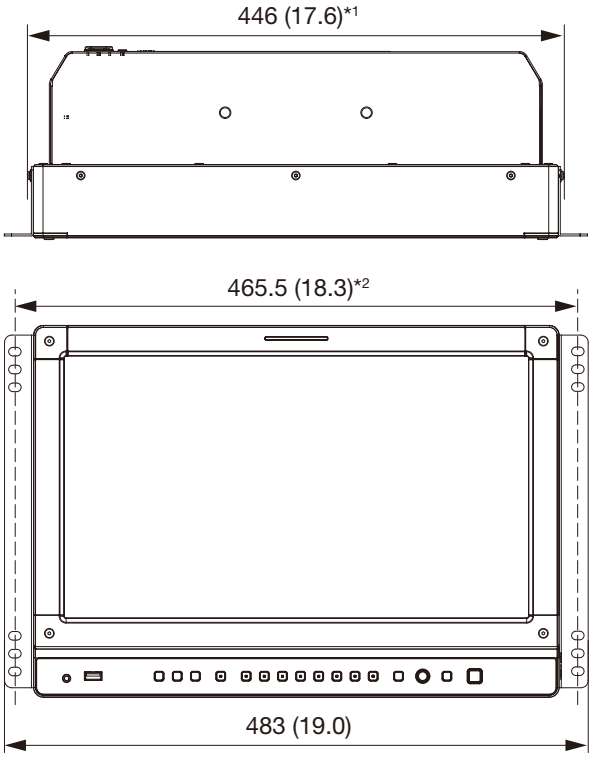

*1 Outer dimensions (including the thickness of the Rack Mount Bracket Screw and the Rack Mount Bracket)

*2 Mounting pitch

Unit: mm (inch)

Supported Signal Format

SDI

* Formats not supporting audio signals.

Transmission method	Signal format	Color format	Color depth	Standards
SD-SDI	720x487i 59.94/60.00 Hz*	4:2:2 YCbCr	10-bit	SMPTE-259M
	720x576i 50.00 Hz*			
HD-SDI	1280x720P 59.94/60.00 Hz	4:2:2 YCbCr	10-bit	SMPTE 292-1 SMPTE 296
	1280x720P 50.00 Hz			
	1280x720P 29.97/30.00 Hz			
	1280x720P 25.00 Hz			
	1280x720P 23.98/24.00 Hz			
	1920x1080i 59.94/60.00 Hz			SMPTE 292-1 SMPTE 274M
	1920x1080i 50.00 Hz			
	1920x1080P 29.97/30.00 Hz			
	1920x1080PsF 29.97/30.00 Hz			
	1920x1080P 25.00 Hz			
	1920x1080PsF 25.00 Hz			
	1920x1080P 23.98/24.00 Hz			
	1920x1080PsF 23.98/24.00 Hz			
	2048x1080i 59.94/60.00 Hz			
	2048x1080i 50.00 Hz			
	2048x1080P 29.97/30.00 Hz			SMPTE 292-1 SMPTE 428-9 SMPTE 428-19 SMPTE 2048-2
	2048x1080PsF 29.97/30.00 Hz			
	2048x1080P 25.00 Hz			
	2048x1080PsF 25.00 Hz			
	2048x1080P 23.98/24.00 Hz			
	2048x1080PsF 23.98/24.00 Hz			
3G-SDI (Level A)	1280x720P 59.94/60.00 Hz	4:4:4 RGB 4:4:4 YCbCr	10-bit	SMPTE 425-1 SMPTE 296
	1280x720P 50.00 Hz	4:4:4 RGB 4:4:4 YCbCr	10-bit	
	1280x720P 29.97/30.00 Hz	4:4:4 RGB 4:4:4 YCbCr	10-bit	
	1280x720P 25.00 Hz	4:4:4 RGB 4:4:4 YCbCr	10-bit	
	1280x720P 23.98/24.00 Hz	4:4:4 RGB 4:4:4 YCbCr	10-bit	
	1920x1080P 59.94/60.00 Hz	4:2:2 YCbCr	10-bit	SMPTE 425-1 SMPTE 274M

Transmission method	Signal format	Color format	Color depth	Standards
3G-SDI (Level A)	1920x1080i 59.94/60.00 Hz	4:4:4 RGB 4:4:4 YCbCr	12-bit/10-bit	SMPTE 425-1 SMPTE 274M
		4:2:2 YCbCr	12-bit	
	1920x1080P 50.00 Hz	4:2:2 YCbCr	10-bit	
	1920x1080i 50.00 Hz	4:4:4 RGB 4:4:4 YCbCr	12-bit/10-bit	
		4:2:2 YCbCr	12-bit	
	1920x1080P 29.97/30.00 Hz	4:4:4 RGB 4:4:4 YCbCr	12-bit/10-bit	
		4:2:2 YCbCr	12-bit	
	1920x1080PsF 29.97/30.00 Hz	4:4:4 RGB	10-bit	
			12-bit	
		4:4:4 YCbCr	12-bit	
		4:4:4 YCbCr	10-bit	SMPTE 425-1 SMPTE 274M
		4:2:2 YCbCr	12-bit	
	1920x1080P 25.00 Hz	4:4:4 RGB 4:4:4 YCbCr	12-bit/10-bit	
		4:2:2 YCbCr	12-bit	
	1920x1080PsF 25.00 Hz	4:4:4 RGB	10-bit	
			12-bit	
		4:4:4 YCbCr	12-bit	
		4:4:4 YCbCr	10-bit	SMPTE 425-1 SMPTE 274M
		4:2:2 YCbCr	12-bit	
	1920x1080P 23.98/24.00 Hz	4:4:4 RGB 4:4:4 YCbCr	12-bit/10-bit	
		4:2:2 YCbCr	12-bit	
	1920x1080PsF 23.98/24.00 Hz	4:4:4 RGB	10-bit	
			12-bit	
		4:4:4 YCbCr	12-bit	
		4:4:4 YCbCr	10-bit	SMPTE 425-1 SMPTE 274M
		4:2:2 YCbCr	12-bit	
	2048x1080P 59.94/60.00 Hz	4:2:2 YCbCr	10-bit	SMPTE 425-1 SMPTE 428-9 SMPTE 428-19 SMPTE 2048-2
	2048x1080i 59.94/60.00 Hz	4:4:4 RGB 4:4:4 YCbCr	12-bit/10-bit	
		4:4:4 X'Y'Z'	12-bit	
		4:2:2 YCbCr		
	2048x1080P 50.00 Hz	4:2:2 YCbCr	10-bit	SMPTE 425-1 SMPTE 2048-2

Transmission method	Signal format	Color format	Color depth	Standards
3G-SDI (Level A)	2048x1080i 50.00 Hz	4:4:4 RGB 4:4:4 YCbCr	12-bit/10-bit	
		4:4:4 X'Y'Z'	12-bit	
		4:2:2 YCbCr		
	2048x1080P 47.95/48.00 Hz	4:2:2 YCbCr	10-bit	SMPTE 425-1 SMPTE 2048-2
	2048x1080P 29.97/30.00 Hz	4:4:4 RGB	12-bit/10-bit	SMPTE 425-1 SMPTE 428-9 SMPTE 428-19 SMPTE 2048-2
		4:4:4 X'Y'Z'	12-bit	
		4:4:4 YCbCr	12-bit/10-bit	SMPTE 425-1 SMPTE 2048-2
		4:2:2 YCbCr	12-bit	
	2048x1080PsF 29.97/30.00 Hz	4:4:4 RGB	12-bit/10-bit	SMPTE 425-1 SMPTE 428-9 SMPTE 428-19 SMPTE 2048-2
		4:4:4 X'Y'Z'	12-bit	
		4:4:4 YCbCr	12-bit/10-bit	SMPTE 425-1 SMPTE 2048-2
		4:2:2 YCbCr	12-bit	
	2048x1080P 25.00 Hz	4:4:4 RGB	12-bit/10-bit	SMPTE 425-1 SMPTE 428-9 SMPTE 428-19 SMPTE 2048-2
		4:4:4 X'Y'Z'	12-bit	
		4:4:4 YCbCr	12-bit/10-bit	SMPTE 425-1 SMPTE 2048-2
		4:2:2 YCbCr	12-bit	
	2048x1080PsF 25.00 Hz	4:4:4 RGB	12-bit/10-bit	SMPTE 425-1 SMPTE 428-9 SMPTE 428-19 SMPTE 2048-2
		4:4:4 X'Y'Z'	12-bit	
		4:4:4 YCbCr	12-bit/10-bit	SMPTE 425-1 SMPTE 2048-2
		4:2:2 YCbCr	12-bit	
	2048x1080P 23.98/24.00 Hz	4:4:4 RGB	12-bit/10-bit	SMPTE 425-1 SMPTE 428-9 SMPTE 428-19 SMPTE 2048-2
		4:4:4 X'Y'Z'	12-bit	
		4:4:4 YCbCr	12-bit/10-bit	SMPTE 425-1 SMPTE 2048-2
		4:2:2 YCbCr	12-bit	
	2048x1080PsF 23.98/24.00 Hz	4:4:4 RGB	12-bit/10-bit	SMPTE 425-1 SMPTE 428-9 SMPTE 428-19 SMPTE 2048-2
		4:4:4 X'Y'Z'	12-bit	
		4:4:4 YCbCr	12-bit/10-bit	SMPTE 425-1 SMPTE 2048-2
		4:2:2 YCbCr	12-bit	

Transmission method	Signal format	Color format	Color depth	Standards
3G-SDI (Level B)	1920x1080P 59.94/60.00 Hz	4:2:2 YCbCr	10-bit	SMPTE 425-1 SMPTE 372 SMPTE 274M
	1920x1080i 59.94/60.00 Hz	4:4:4 RGB 4:4:4 YCbCr	12-bit/10-bit	
		4:2:2 YCbCr	12-bit	
	1920x1080P 50.00 Hz	4:2:2 YCbCr	10-bit	
	1920x1080i 50.00 Hz	4:4:4 RGB 4:4:4 YCbCr	12-bit/10-bit	
		4:2:2 YCbCr	12-bit	
	1920x1080P 29.97/30.00 Hz	4:4:4 RGB 4:4:4 YCbCr	12-bit/10-bit	
		4:2:2 YCbCr	12-bit	
	1920x1080PsF 29.97/30.00 Hz	4:4:4 RGB 4:4:4 YCbCr	12-bit/10-bit	
		4:2:2 YCbCr	12-bit	
	1920x1080P 25.00 Hz	4:4:4 RGB 4:4:4 YCbCr	12-bit/10-bit	
		4:2:2 YCbCr	12-bit	
	1920x1080PsF 25.00 Hz	4:4:4 RGB 4:4:4 YCbCr	12-bit/10-bit	
		4:2:2 YCbCr	12-bit	
	1920x1080P 23.98/24.00 Hz	4:4:4 RGB 4:4:4 YCbCr	12-bit/10-bit	
		4:2:2 YCbCr	12-bit	
	1920x1080PsF 23.98/24.00 Hz	4:4:4 RGB 4:4:4 YCbCr	12-bit/10-bit	
		4:2:2 YCbCr	12-bit	
	2048x1080P 59.94/60.00 Hz	4:2:2 YCbCr	10-bit	SMPTE 425-1 SMPTE 372 SMPTE 428-9 SMPTE 428-19 SMPTE 2048-2
	2048x1080i 59.94/60.00 Hz	4:4:4 RGB 4:4:4 YCbCr	12-bit/10-bit	
		4:4:4 X'Y'Z' 4:2:2 YCbCr	12-bit	
	2048x1080P 50.00 Hz	4:2:2 YCbCr	10-bit	SMPTE 425-1 SMPTE 372 SMPTE 2048-2
	2048x1080i 50.00 Hz	4:4:4 RGB 4:4:4 YCbCr	12-bit/10-bit	
		4:4:4 X'Y'Z' 4:2:2 YCbCr	12-bit	

Transmission method	Signal format	Color format	Color depth	Standards
3G-SDI (Level B)	2048x1080P 47.95/48.00 Hz	4:2:2 YCbCr	10-bit	SMPTE 425-1 SMPTE 372 SMPTE 2048-2
	2048x1080P 29.97/30.00 Hz	4:4:4 RGB	12-bit/10-bit	SMPTE 425-1 SMPTE 372 SMPTE 428-9 SMPTE 428-19 SMPTE 2048-2
		4:4:4 X'Y'Z'	12-bit	
		4:4:4 YCbCr	12-bit/10-bit	SMPTE 425-1 SMPTE 372 SMPTE 2048-2
		4:2:2 YCbCr	12-bit	
	2048x1080PsF 29.97/30.00 Hz	4:4:4 RGB	12-bit/10-bit	SMPTE 425-1 SMPTE 372 SMPTE 428-9 SMPTE 428-19 SMPTE 2048-2
		4:4:4 X'Y'Z'	12-bit	
		4:4:4 YCbCr	12-bit/10-bit	SMPTE 425-1 SMPTE 372 SMPTE 2048-2
		4:2:2 YCbCr	12-bit	
	2048x1080P 25.00 Hz	4:4:4 RGB	12-bit/10-bit	SMPTE 425-1 SMPTE 372 SMPTE 428-9 SMPTE 428-19 SMPTE 2048-2
		4:4:4 X'Y'Z'	12-bit	
		4:4:4 YCbCr	12-bit/10-bit	SMPTE 425-1 SMPTE 372 SMPTE 2048-2
		4:2:2 YCbCr	12-bit	
	2048x1080PsF 25.00 Hz	4:4:4 RGB	12-bit/10-bit	SMPTE 425-1 SMPTE 372 SMPTE 428-9 SMPTE 428-19 SMPTE 2048-2
		4:4:4 X'Y'Z'	12-bit	
		4:4:4 YCbCr	12-bit/10-bit	SMPTE 425-1 SMPTE 372 SMPTE 2048-2
		4:2:2 YCbCr	12-bit	
	2048x1080P 23.98/24.00 Hz	4:4:4 RGB	12-bit/10-bit	SMPTE 425-1 SMPTE 372 SMPTE 428-9 SMPTE 428-19 SMPTE 2048-2
		4:4:4 X'Y'Z'	12-bit	
		4:4:4 YCbCr	12-bit/10-bit	SMPTE 425-1 SMPTE 372 SMPTE 2048-2
		4:2:2 YCbCr	12-bit	

Transmission method	Signal format	Color format	Color depth	Standards
3G-SDI (Level B)	2048x1080PsF 23.98/24.00 Hz	4:4:4 RGB	12-bit/10-bit	SMPTE 425-1 SMPTE 372 SMPTE 428-9 SMPTE 428-19 SMPTE 2048-2
		4:4:4 X'Y'Z'	12-bit	
		4:4:4 YCbCr	12-bit/10-bit	SMPTE 425-1 SMPTE 372 SMPTE 2048-2
		4:2:2 YCbCr	12-bit	
Dual Link 3G-SDI (Level A)	1920x1080P 59.94/60 Hz	4:4:4 RGB 4:4:4 YCbCr	12-bit/10-bit	SMPTE 425-3 SMPTE 274M
		4:2:2 YCbCr	12-bit	
	1920x1080P 50 Hz	4:4:4 RGB 4:4:4 YCbCr	12-bit/10-bit	
		4:2:2 YCbCr	12-bit	
	2048x1080P 59.94/60 Hz	4:4:4 RGB 4:4:4 YCbCr	12-bit/10-bit	SMPTE 425-3 SMPTE 428-9 SMPTE 428-19 SMPTE 2048-2
		4:4:4 X'Y'Z' 4:2:2 YCbCr	12-bit	
	2048x1080P 50 Hz	4:4:4 RGB 4:4:4 YCbCr	12-bit/10-bit	
		4:4:4 X'Y'Z' 4:2:2 YCbCr	12-bit	
	2048x1080P 47.95/48 Hz	4:4:4 RGB 4:4:4 YCbCr	12-bit/10-bit	
		4:4:4 X'Y'Z' 4:2:2 YCbCr	12-bit	
Dual Link 3G-SDI (Level B)	1920x1080P 59.94/60 Hz	4:4:4 RGB 4:4:4 YCbCr	12-bit/10-bit	SMPTE 425-3 SMPTE 372 SMPTE 274M
		4:2:2 YCbCr	12-bit	
	1920x1080P 50 Hz	4:4:4 RGB 4:4:4 YCbCr	12-bit/10-bit	
		4:2:2 YCbCr	12-bit	
	2048x1080P 59.94/60 Hz	4:4:4 RGB 4:4:4 YCbCr	12-bit/10-bit	SMPTE 425-3 SMPTE 372 SMPTE 428-9 SMPTE 428-19 SMPTE 2048-2
		4:4:4 X'Y'Z' 4:2:2 YCbCr	12-bit	
	2048x1080P 50 Hz	4:4:4 RGB 4:4:4 YCbCr	12-bit/10-bit	
		4:4:4 X'Y'Z' 4:2:2 YCbCr	12-bit	
	2048x1080P 47.95/48 Hz	4:4:4 RGB 4:4:4 YCbCr	12-bit/10-bit	
		4:4:4 X'Y'Z' 4:2:2 YCbCr	12-bit	

Transmission method	Signal format	Color format	Color depth	Standards
Dual Link 3G-SDI Square Division (Level B)	3840x2160P 29.97/30 Hz	4:2:2 YCbCr	10-bit	SMPTE 425-3 SMPTE 372 SMPTE 274M
	3840x2160PsF 29.97/30 Hz			
	3840x2160P 25 Hz			
	3840x2160PsF 25 Hz			
	3840x2160P 23.98/24 Hz			
	3840x2160PsF 23.98/24 Hz			
	4096x2160P 29.97/30 Hz			SMPTE 425-3 SMPTE 372 SMPTE 2048-2
	4096x2160PsF 29.97/30 Hz			
	4096x2160P 25 Hz			
	4096x2160PsF 25 Hz			
	4096x2160P 23.98/24 Hz			
	4096x2160PsF 23.98/24 Hz			
Dual Link 3G-SDI 2 Sample Interleave (Level B)	3840x2160P 29.97/30 Hz	4:2:2 YCbCr	10-bit	SMPTE 425-3 SMPTE 372 SMPTE 274M
	3840x2160P 25 Hz			
	3840x2160P 23.98/24 Hz			
	4096x2160P 29.97/30 Hz			SMPTE 425-3 SMPTE 372 SMPTE 2048-2
	4096x2160P 25 Hz			
	4096x2160P 23.98/24 Hz			
Quad Link HD-SDI	3840x2160i 59.94/60.00 Hz	4:2:2 YCbCr	10-bit	SMPTE 292-1 SMPTE 274M
	3840x2160i 50.00 Hz			
	3840x2160P 29.97/30.00 Hz			
	3840x2160PsF 29.97/30.00 Hz			
	3840x2160P 25.00 Hz			
	3840x2160PsF 25.00 Hz			
	3840x2160P 23.98/24.00 Hz			
	3840x2160PsF 23.98/24.00 Hz			
	4096x2160i 59.94/60.00 Hz			
	4096x2160i 50.00 Hz			
	4096x2160P 29.97/30.00 Hz			SMPTE 292-1 SMPTE 428-9 SMPTE 428-19 SMPTE 2048-2
	4096x2160PsF 29.97/30.00 Hz			
	4096x2160P 25.00 Hz			
	4096x2160PsF 25.00 Hz			
	4096x2160P 23.98/24.00 Hz			
	4096x2160PsF 23.98/24.00 Hz			

Transmission method	Signal format	Color format	Color depth	Standards
Quad Link 3G-SDI (Level A)	3840x2160P 59.94/60.00 Hz	4:2:2 YCbCr	10-bit	SMPTE 425-1 SMPTE 274M
	3840x2160i 59.94/60.00 Hz	4:4:4 RGB 4:4:4 YCbCr	12-bit/10-bit	
		4:2:2 YCbCr	12-bit	
	3840x2160P 50.00 Hz	4:2:2 YCbCr	12-bit	
	3840x2160i 50.00 Hz	4:4:4 RGB 4:4:4 YCbCr	12-bit/10-bit	
		4:2:2 YCbCr	12-bit	
	3840x2160P 29.97/30.00 Hz	4:4:4 RGB 4:4:4 YCbCr	12-bit/10-bit	
		4:2:2 YCbCr	12-bit	
	3840x2160PsF 29.97/30.00 Hz	4:4:4 RGB	10-bit	
			12-bit	
		4:4:4 YCbCr	12-bit	
		4:4:4 YCbCr	10-bit	SMPTE 425-1 SMPTE 274M
		4:2:2 YCbCr	12-bit	
	3840x2160P 25.00 Hz	4:4:4 RGB 4:4:4 YCbCr	12-bit/10-bit	
		4:2:2 YCbCr	12-bit	
	3840x2160PsF 25.00 Hz	4:4:4 RGB	10-bit	
			12-bit	
		4:4:4 YCbCr	12-bit	
		4:4:4 YCbCr	10-bit	SMPTE 425-1 SMPTE 274M
		4:2:2 YCbCr	12-bit	
	3840x2160P 23.98/24.00 Hz	4:4:4 RGB 4:4:4 YCbCr	12-bit/10-bit	
		4:2:2 YCbCr	12-bit	
	3840x2160PsF 23.98/24.00 Hz	4:4:4 RGB	10-bit	
			12-bit	
		4:4:4 YCbCr	12-bit	
		4:4:4 YCbCr	10-bit	SMPTE 425-1 SMPTE 274M
		4:2:2 YCbCr	12-bit	
	4096x2160P 59.94/60.00 Hz	4:2:2 YCbCr	10-bit	SMPTE 425-1 SMPTE 428-9 SMPTE 428-19 SMPTE 2048-2
	4096x2160i 59.94/60.00 Hz	4:4:4 RGB 4:4:4 YCbCr	12-bit/10-bit	
		4:4:4 X'Y'Z' 4:2:2 YCbCr	12-bit	

Transmission method	Signal format	Color format	Color depth	Standards
Quad Link 3G-SDI (Level A)	4096x2160P 50.00 Hz	4:2:2 YCbCr	10-bit	SMPTE 425-1 SMPTE 2048-2
	4096x2160i 50.00 Hz	4:4:4 RGB 4:4:4 YCbCr	12-bit/10-bit	
		4:4:4 X'Y'Z' 4:2:2 YCbCr	12-bit	
	4096x2160P 47.95/48.00 Hz	4:2:2 YCbCr	10-bit	SMPTE 425-1 SMPTE 2048-2
	4096x2160P 29.97/30.00 Hz	4:4:4 RGB	12-bit/10-bit	SMPTE 425-1 SMPTE 428-9 SMPTE 428-19 SMPTE 2048-2
		4:4:4 X'Y'Z'	12-bit	
		4:4:4 YCbCr	12-bit/10-bit	SMPTE 425-1 SMPTE 2048-2
		4:2:2 YCbCr	12-bit	
	4096x2160PsF 29.97/30.00 Hz	4:4:4 RGB	12-bit/10-bit	SMPTE 425-1 SMPTE 428-9 SMPTE 428-19 SMPTE 2048-2
		4:4:4 X'Y'Z'	12-bit	
		4:4:4 YCbCr	12-bit/10-bit	SMPTE 425-1 SMPTE 2048-2
		4:2:2 YCbCr	12-bit	
	4096x2160P 25.00 Hz	4:4:4 RGB	12-bit/10-bit	SMPTE 425-1 SMPTE 428-9 SMPTE 428-19 SMPTE 2048-2
		4:4:4 X'Y'Z'	12-bit	
		4:4:4 YCbCr	12-bit/10-bit	SMPTE 425-1 SMPTE 2048-2
		4:2:2 YCbCr	12-bit	
	4096x2160PsF 25.00 Hz	4:4:4 RGB	12-bit/10-bit	SMPTE 425-1 SMPTE 428-9 SMPTE 428-19 SMPTE 2048-2
		4:4:4 X'Y'Z'	12-bit	
		4:4:4 YCbCr	12-bit/10-bit	SMPTE 425-1 SMPTE 2048-2
		4:2:2 YCbCr	12-bit	
	4096x2160P 23.98/24.00 Hz	4:4:4 RGB	12-bit/10-bit	SMPTE 425-1 SMPTE 428-9 SMPTE 428-19 SMPTE 2048-2
		4:4:4 X'Y'Z'	12-bit	
		4:4:4 YCbCr	12-bit/10-bit	SMPTE 425-1 SMPTE 2048-2
		4:2:2 YCbCr	12-bit	
	4096x2160PsF 23.98/24.00 Hz	4:4:4 RGB	12-bit/10-bit	SMPTE 425-1 SMPTE 428-9 SMPTE 428-19 SMPTE 2048-2
		4:4:4 X'Y'Z'	12-bit	
		4:4:4 YCbCr	12-bit/10-bit	SMPTE 425-1 SMPTE 2048-2
		4:2:2 YCbCr	12-bit	

Transmission method	Signal format	Color format	Color depth	Standards
Quad Link 3G-SDI 2 Sample Interleave (Level A)	3840x2160P 59.94/60 Hz	4:2:2 YCbCr	10-bit	SMPTE 425-5 SMPTE 274M
	3840x2160P 50 Hz	4:2:2 YCbCr	10-bit	
	3840x2160P 29.97/30 Hz	4:4:4 RGB 4:4:4 YCbCr	12-bit/10-bit	
		4:2:2 YCbCr	12-bit	
	3840x2160P 25 Hz	4:4:4 RGB 4:4:4 YCbCr	12-bit/10-bit	
		4:2:2 YCbCr	12-bit	
	3840x2160P 23.98/24 Hz	4:4:4 RGB 4:4:4 YCbCr	12-bit/10-bit	
		4:2:2 YCbCr	12-bit	
	4096x2160P 59.94/60 Hz	4:2:2 YCbCr	10-bit	SMPTE 425-5 SMPTE 428-9 SMPTE 428-19 SMPTE 2048-2
	4096x2160P 50 Hz	4:2:2 YCbCr	10-bit	
	4096x2160P 47.95/48 Hz	4:2:2 YCbCr	10-bit	
	4096x2160P 29.97/30 Hz	4:4:4 RGB	12-bit/10-bit	
		4:4:4 X'Y'Z'	12-bit	
		4:4:4 YCbCr	12-bit/10-bit	
		4:2:2 YCbCr	12-bit	
	4096x2160P 25 Hz	4:4:4 RGB	12-bit/10-bit	
		4:4:4 X'Y'Z'	12-bit	
		4:4:4 YCbCr	12-bit/10-bit	
		4:2:2 YCbCr	12-bit	
	4096x2160P 23.98/24 Hz	4:4:4 RGB	12-bit/10-bit	
		4:4:4 X'Y'Z'	12-bit	
		4:4:4 YCbCr	12-bit/10-bit	
		4:2:2 YCbCr	12-bit	
Quad Link 3G-SDI (Level B)	3840x2160P 59.94/60.00 Hz	4:2:2 YCbCr	10-bit	SMPTE 425-1 SMPTE 372 SMPTE 274M
	3840x2160i 59.94/60.00 Hz	4:4:4 RGB 4:4:4 YCbCr	12-bit/10-bit	
		4:2:2 YCbCr	12-bit	
	3840x2160P 50.00 Hz	4:2:2 YCbCr	10-bit	

Transmission method	Signal format	Color format	Color depth	Standards
Quad Link 3G-SDI (Level B)	3840x2160i 50.00 Hz	4:4:4 RGB 4:4:4 YCbCr	12-bit/10-bit	SMPTE 425-1 SMPTE 372 SMPTE 274M
		4:2:2 YCbCr	12-bit	
	3840x2160P 29.97/30.00 Hz	4:4:4 RGB 4:4:4 YCbCr	12-bit/10-bit	
		4:2:2 YCbCr	12-bit	
	3840x2160PsF 29.97/30.00 Hz	4:4:4 RGB 4:4:4 YCbCr	12-bit/10-bit	
		4:2:2 YCbCr	12-bit	
	3840x2160P 25.00 Hz	4:4:4 RGB 4:4:4 YCbCr	12-bit/10-bit	
		4:2:2 YCbCr	12-bit	
	3840x2160PsF 25.00 Hz	4:4:4 RGB 4:4:4 YCbCr	12-bit/10-bit	
		4:2:2 YCbCr	12-bit	
	3840x2160P 23.98/24.00 Hz	4:4:4 RGB 4:4:4 YCbCr	12-bit/10-bit	
		4:2:2 YCbCr	12-bit	
	3840x2160PsF 23.98/24.00 Hz	4:4:4 RGB 4:4:4 YCbCr	12-bit/10-bit	
		4:2:2 YCbCr	12-bit	
	4096x2160P 59.94/60.00 Hz	4:2:2 YCbCr	10-bit	SMPTE 425-1 SMPTE 372 SMPTE 428-9 SMPTE 428-19 SMPTE 2048-2
	4096x2160i 59.94/60.00 Hz	4:4:4 RGB 4:4:4 YCbCr	12-bit/10-bit	
		4:4:4 X'Y'Z' 4:2:2 YCbCr	12-bit	
	4096x2160P 50.00 Hz	4:2:2 YCbCr	10-bit	SMPTE 425-1 SMPTE 372 SMPTE 2048-2
	4096x2160i 50.00 Hz	4:4:4 RGB 4:4:4 YCbCr	12-bit/10-bit	
		4:4:4 X'Y'Z' 4:2:2 YCbCr	12-bit	
	4096x2160P 47.95/48.00 Hz	4:2:2 YCbCr	10-bit	SMPTE 425-1 SMPTE 372 SMPTE 2048-2

Transmission method	Signal format	Color format	Color depth	Standards
Quad Link 3G-SDI (Level B)	4096x2160P 29.97/30.00 Hz	4:4:4 RGB	12-bit/10-bit	SMPTE 425-1 SMPTE 372 SMPTE 428-9 SMPTE 428-19 SMPTE 2048-2
		4:4:4 X'Y'Z'	12-bit	
		4:4:4 YCbCr	12-bit/10-bit	SMPTE 425-1 SMPTE 372 SMPTE 2048-2
		4:2:2 YCbCr	12-bit	
	4096x2160PsF 29.97/30.00 Hz	4:4:4 RGB	12-bit/10-bit	SMPTE 425-1 SMPTE 372 SMPTE 428-9 SMPTE 428-19 SMPTE 2048-2
		4:4:4 X'Y'Z'	12-bit	
		4:4:4 YCbCr	12-bit/10-bit	SMPTE 425-1 SMPTE 372 SMPTE 2048-2
		4:2:2 YCbCr	12-bit	
	4096x2160P 25.00 Hz	4:4:4 RGB	12-bit/10-bit	SMPTE 425-1 SMPTE 372 SMPTE 428-9 SMPTE 428-19 SMPTE 2048-2
		4:4:4 X'Y'Z'	12-bit	
		4:4:4 YCbCr	12-bit/10-bit	SMPTE 425-1 SMPTE 372 SMPTE 2048-2
		4:2:2 YCbCr	12-bit	
	4096x2160PsF 25.00 Hz	4:4:4 RGB	12-bit/10-bit	SMPTE 425-1 SMPTE 372 SMPTE 428-9 SMPTE 428-19 SMPTE 2048-2
		4:4:4 X'Y'Z'	12-bit	
		4:4:4 YCbCr	12-bit/10-bit	SMPTE 425-1 SMPTE 372 SMPTE 2048-2
		4:2:2 YCbCr	12-bit	
	4096x2160P 23.98/24.00 Hz	4:4:4 RGB	12-bit/10-bit	SMPTE 425-1 SMPTE 372 SMPTE 428-9 SMPTE 428-19 SMPTE 2048-2
		4:4:4 X'Y'Z'	12-bit	
		4:4:4 YCbCr	12-bit/10-bit	SMPTE 425-1 SMPTE 372 SMPTE 2048-2
		4:2:2 YCbCr	12-bit	

Transmission method	Signal format	Color format	Color depth	Standards
Quad Link 3G-SDI (Level B)	4096x2160PsF 23.98/24.00 Hz	4:4:4 RGB	12-bit/10-bit	SMPTE 425-1 SMPTE 372 SMPTE 428-9 SMPTE 428-19 SMPTE 2048-2
		4:4:4 X'Y'Z'	12-bit	
		4:4:4 YCbCr	12-bit/10-bit	SMPTE 425-1 SMPTE 372 SMPTE 2048-2
		4:2:2 YCbCr	12-bit	
Quad Link 3G-SDI 2 Sample Interleave (Level B)	3840x2160P 59.94/60 Hz	4:2:2 YCbCr	10-bit	SMPTE 425-5 SMPTE 372 SMPTE 274M
	3840x2160P 50 Hz	4:2:2 YCbCr	10-bit	
	3840x2160P 29.97/30 Hz	4:4:4 RGB 4:4:4 YCbCr	12-bit/10-bit	
		4:2:2 YCbCr	12-bit	
	3840x2160P 25 Hz	4:4:4 RGB 4:4:4 YCbCr	12-bit/10-bit	
		4:2:2 YCbCr	12-bit	
	3840x2160P 23.98/24 Hz	4:4:4 RGB 4:4:4 YCbCr	12-bit/10-bit	
		4:2:2 YCbCr	12-bit	
	4096x2160P 59.94/60 Hz	4:2:2 YCbCr	10-bit	SMPTE 425-5 SMPTE 372 SMPTE 428-9 SMPTE 428-19 SMPTE 2048-2
	4096x2160P 50 Hz	4:2:2 YCbCr	10-bit	
	4096x2160P 47.95/48 Hz	4:2:2 YCbCr	10-bit	
	4096x2160P 29.97/30 Hz	4:4:4 RGB	12-bit/10-bit	
		4:4:4 X'Y'Z'	12-bit	
		4:4:4 YCbCr	12-bit/10-bit	
		4:2:2 YCbCr	12-bit	
	4096x2160P 25 Hz	4:4:4 RGB	12-bit/10-bit	
		4:4:4 X'Y'Z'	12-bit	
		4:4:4 YCbCr	12-bit/10-bit	
		4:2:2 YCbCr	12-bit	
	4096x2160P 23.98/24 Hz	4:4:4 RGB	12-bit/10-bit	
		4:4:4 X'Y'Z'	12-bit	
		4:4:4 YCbCr	12-bit/10-bit	
		4:2:2 YCbCr	12-bit	
6G-SDI	3840x2160P 29.97/30.00 Hz	4:2:2 YCbCr	10-bit	SMPTE 2081-10
	3840x2160P 25.00 Hz			
	3840x2160P 23.98/24.00 Hz			
	4096x2160P 25.00 Hz			
	4096x2160P 23.98/24.00 Hz			
Dual Link 6G-SDI Square Division, 2 Sample Interleave	3840x2160P 59.94/60.00 Hz	4:2:2 YCbCr	10-bit	SMPTE 2081-11
	3840x2160P 50.00 Hz			

Transmission method	Signal format	Color format	Color depth	Standards
V1711 12G-SDI	3840x2160P 29.97/30.00 Hz	4:4:4 RGB 4:4:4 YCbCr	12-bit/10-bit	SMPTE 2082-10
		4:2:2 YCbCr	12-bit	
	3840x2160P 25.00 Hz	4:4:4 RGB 4:4:4 YCbCr	12-bit/10-bit	
		4:2:2 YCbCr	12-bit	
	3840x2160P 23.98/24.00 Hz	4:4:4 RGB 4:4:4 YCbCr	12-bit/10-bit	
		4:2:2 YCbCr	12-bit	
	4096x2160P 25.00 Hz	4:4:4 RGB 4:4:4 YCbCr	12-bit/10-bit	
		4:4:4 X'Y'Z' 4:2:2 YCbCr	12-bit	
	4096x2160P 23.98/24.00 Hz	4:4:4 RGB 4:4:4 YCbCr	12-bit/10-bit	
		4:4:4 X'Y'Z' 4:2:2 YCbCr	12-bit	
	3840x2160P 59.94/60.00 Hz	4:2:2 YCbCr	10-bit	
	3840x2160P 50.00 Hz			
	4096x2160P 47.95/48.00 Hz			
	4096x2160P 59.94/60.00 Hz			
	4096x2160P 50.00 Hz			

RAW

Signal format
3840x2160P 59.94 Hz, 50.00 Hz, 29.97 Hz, 25.00 Hz, 24.00 Hz, 23.98 Hz
4096x2160P 59.94 Hz, 50.00 Hz, 29.97 Hz, 25.00 Hz, 24.00 Hz, 23.98 Hz

HDMI

Signal format	Color format/Color depth
640x480P 59.94/60.00 Hz	4:4:4 RGB 8-bit
800x600P 60.00 Hz	
1024x768P 60.00 Hz	
720x480P 59.94/60.00 Hz	4:4:4 RGB 12-bit/10-bit/8-bit 4:4:4 YCbCr 12-bit/10-bit/8-bit 4:2:2 YCbCr 12-bit
720x576P 50.00 Hz	
1280x720P 59.94/60.00 Hz	
1280x720P 50.00 Hz	
1920x1080P 59.94/60.00 Hz	
1920x1080i 59.94/60.00 Hz	
1920x1080P 50.00 Hz	
1920x1080i 50.00 Hz	
1920x1080P 29.97/30.00 Hz	
1920x1080P 25.00 Hz	
1920x1080P 23.98/24.00 Hz	
2048x1080P 59.94/60.00 Hz	
2048x1080P 50.00 Hz	
2048x1080P 29.97/30.00 Hz	
2048x1080P 25.00 Hz	
2048x1080P 23.98/24.00 Hz	
3840x2160P 59.94/60.00 Hz	4:4:4 RGB 8-bit 4:4:4 YCbCr 8-bit 4:2:2 YCbCr 12-bit 4:2:0 YCbCr 12-bit/10-bit/8-bit
3840x2160P 50.00 Hz	
3840x2160P 29.97/30.00 Hz	4:4:4 RGB 12-bit/10-bit/8-bit 4:4:4 YCbCr 12-bit/10-bit/8-bit 4:2:2 YCbCr 12-bit
3840x2160P 25.00 Hz	
3840x2160P 23.98/24.00 Hz	
4096x2160P 59.94/60.00 Hz	4:4:4 RGB 8-bit 4:4:4 YCbCr 8-bit 4:2:2 YCbCr 12-bit 4:2:0 YCbCr 12-bit/10-bit/8-bit
4096x2160P 50.00 Hz	
4096x2160P 29.97/30.00 Hz	4:4:4 RGB 12-bit/10-bit/8-bit 4:4:4 YCbCr 12-bit/10-bit/8-bit 4:2:2 YCbCr 12-bit
4096x2160P 25.00 Hz	
4096x2160P 23.98/24.00 Hz	

Image/Frame Display

SDI

Signal system			Display Method	
720x487	59.94/60.00	i	59.94/60.00	P
720x576	50.00	i	50.00	P
1280x720	23.98/24.00	P	47.96/48.00	P*
	25.00	P	50.00	P*
	29.97/30.00	P	59.94/60.00	P*
	50.00	P	50.00	P
	59.94/60.00	P	59.94/60.00	P
1920x1080	50.00	i	50.00	P
	59.94/60.00	i	59.94/60.00	P
	23.98/24.00	PsF	47.96/48.00	P*
	25.00	PsF	50.00	P*
	29.97/30.00	PsF	59.94/60.00	P*
	23.98/24.00	P	47.96/48.00	P*
	25.00	P	50.00	P*
	29.97/30.00	P	59.94/60.00	P*
	50.00	P	50.00	P
	59.94/60.00	P	59.94/60.00	P
2048x1080	50.00	i	50.00	P
	59.94/60.00	i	59.94/60.00	P
	23.98/24.00	PsF	47.96/48.00	P*
	25.00	PsF	50.00	P*
	29.97/30.00	PsF	59.94/60.00	P*
	23.98/24.00	P	47.96/48.00	P*
	25.00	P	50.00	P*
	29.97/30.00	P	59.94/60.00	P*
	47.95/48.00	P	47.95/48.00	P
	50.00	P	50.00	P
	59.94/60.00	P	59.94/60.00	P

Signal system			Display Method	
3840x2160	50.00	i	50.00	P
	59.94/60.00	i	59.94/60.00	P
	23.98/24.00	PsF	47.96/48.00	P*
	25.00	PsF	50.00	P*
	29.97/30.00	PsF	59.94/60.00	P*
	23.98/24.00	P	47.96/48.00	P*
	25.00	P	50.00	P*
	29.97/30.00	P	59.94/60.00	P*
	50.00	P	50.00	P
	59.94/60.00	P	59.94/60.00	P
4096x2160	50.00	i	50.00	P
	59.94/60.00	i	59.94/60.00	P
	23.98/24.00	PsF	47.96/48.00	P*
	25.00	PsF	50.00	P*
	29.97/30.00	PsF	59.94/60.00	P*
	23.98/24.00	P	47.96/48.00	P*
	25.00	P	50.00	P*
	29.97/30.00	P	59.94/60.00	P*
	47.95/48.00	P	47.95/48.00	P
	50.00	P	50.00	P
	59.94/60.00	P	59.94/60.00	P

* : Displaying same frame

HDMI

Signal system			Display Method	
640x480	59.94/60.00	P	59.94/60.00	P
800x600	60.00	P	60.00	P
720x480	59.94/60.00	P	59.94/60.00	P
720x576	50.00	P	50.00	P
1024x768	60.00	P	60.00	P
1280x720	59.94/60.00	P	59.94/60.00	P
1280x720	50.00	P	50.00	P
1920x1080	59.94/60.00	P	59.94/60.00	P
1920x1080	59.94/60.00	i	59.94/60.00	P
1920x1080	50.00	P	50.00	P
1920x1080	50.00	i	50.00	P
1920x1080	29.97/30.00	P	59.94/60.00	P*
1920x1080	25.00	P	50.00	P*
1920x1080	23.98/24.00	P	47.96/48.00	P*
2048x1080	59.94/60.00	P	59.94/60.00	P
2048x1080	50.00	P	50.00	P
2048x1080	29.97/30.00	P	59.94/60.00	P*
2048x1080	25.00	P	50.00	P*
2048x1080	23.98/24.00	P	47.96/48.00	P*
3840x2160	59.94/60.00	P	59.94/60.00	P
3840x2160	50.00	P	50.00	P
3840x2160	29.97/30.00	P	59.94/60.00	P*
3840x2160	25.00	P	50.00	P*
3840x2160	23.98/24.00	P	47.96/48.00	P*
4096x2160	59.94/60.00	P	59.94/60.00	P
4096x2160	50.00	P	50.00	P
4096x2160	29.97/30.00	P	59.94/60.00	P*
4096x2160	25.00	P	50.00	P*
4096x2160	23.98/24.00	P	47.96/48.00	P*

* : Displaying same frame

Error Messages

Message		Description and Action
Calibration	Failed to initialize the external sensor.	See CA-310 and CA-210 instruction manual.
	Calibration error.	• Check the installation and connection of the external sensor and retry (📖32). • Perform matrix calibration of CA-310 and CA-210 (📖32).
	Calibration is completed. (Brightness setting is lower than target brightness.)	Set the [Luminance] in calibration again (📖61).
	Failed to detect the external sensor. Please check the connection with the sensor.	Correctly connect the external sensor to the USB port of this main unit.
Network	Communication error.	IP address may be in conflict or there may be a network communication error. Check the network environment.
	Invalid IP Address.	Enter the correct IP address.
	Invalid Subnet Mask.	Enter the correct subnet mask.
	Display is not connected.	Check that the Canon display to which you wish to export this video display's settings and this video display are correctly connected with a LAN cable.
Various settings, CDL export	The USB memory is full.	Use another USB memory or delete the content of the memory.
	Failed to write file.	The USB memory may be defective or protected. Check the USB memory.
LUT, Various settings, CDL import	(LUT Import) "LUT Type" is different. (CDL Import) "File Type" is different.	Select the correct file format.
	Failed to read file.	The USB memory may be defective or protected. Check the USB memory.
	Failed to import.	There is an error in the file to be imported. Check the file.
	No import file.	Check and ensure that the file has been saved to the USB memory or imported to [User 1] to [User 3].

Message		Description and Action
Screen Capture	Failed to capture.	The USB memory may be defective or protected. Check the USB memory.
	Invalid Signal.	A screen displaying no video is being captured for example there is no signal or an unsupported signal is being input. Check the signal, input it again, and capture it.
	Copy protected signal.	The signal you tried to capture may be protected by HDCP 2.2 which is a copy prevention standard for HDMI. In this case, the signal cannot be captured. Check the HDMI signal.
	Failed to playback file.	The USB memory or the file may be defective or protected. Check the USB memory or the file.
	No capture file.	Check and ensure that the file has been saved to the USB memory.
Hardware error	Backlight error.	Disconnect the power cord, reconnect it, and then turn on the power. If the message persists, contact Canon Customer Center.
	Fan error.	
	Panel error.	
	I/F error.	
	System error.	
	Invalid operation due to high temperature.	The temperature inside the main unit is high. Turn off the power and wait until the fan stops.
Input signal	No Signal	Displayed when there is no video signal input.
	Unsupported	Unsupported video signal is input. Check the supported signal format (📖115).
Operation	Invalid operation.	Operation is disabled. Check the setting items.
	"Protect Settings" is on.	To use the OSD menu, move the selection frame to [Protect] and press the jog dial for approximately 3 seconds.
	"CDL/User LUT Bypass" is on.	When [CDL/User LUT Bypass] is turned [On], you cannot adjust [Power], [Saturation], [Offset], or [Slope].
	Invalid Password.	Enter the correct password.
	No license.	This function cannot be used as the license file has not been applied. Refer to the Canon website for detailed information.
USB memory	USB memory is not connected.	Correctly connect the USB memory to the USB port of this main unit.
	Unsupported USB memory.	Check the USB memory format and make sure it is not protected.

Message		Description and Action
Wi-Fi adapter	Wi-Fi Adaptor is not connected.	Correctly connect the Wi-Fi adapter to the USB terminal of the video display.
	Failed to connect Wi-Fi Access Point.	The password may be wrong, or there may be a network communication error. Check the network environment.
Firmware Update	No update file.	Firmware update files are not saved on USB memory or other media.
	Failed to read update file.	There is an error in the file. Check the file.
	The firmware/license has been already updated.	This is the file that is updated on the video display.
DC power supply	Low Voltage.	The battery charge level drops if using the battery. If you use another power source, check the input voltage of the DC power supply.
	Low Voltage, Turn off power.	The power has shut off as DC power voltage became insufficient for continued operation. There may not be enough energy left if you are using the battery. Connect a charged battery and turn the video display power on. If you use another power source, check the input voltage of the DC power supply.
	Invalid Voltage, Turn off power.	The power has shut off as the DC power input voltage exceeded the operational threshold. Check the input voltage of the DC power supply.

Troubleshooting

Symptom	Cause and Action	📖
Power does not turn on. (Power indicator does not turn on.)	• Press the ⏻ button. • Check that the AC power supply or DC power cord is connected correctly. • Brightness of the power indicator may be turned off. Turn it on and check once more.	12 24 105
The screen is dark.	When the power indicator does not turn on: • Press the ⏻ button. • Check that the AC power supply or DC power cord is connected correctly.	12 24
	When the power indicator is lit orange: • Press the ⏻ button.	24
	When the power indicator is flashing orange: • Flashing once every 3 seconds : Contact Canon Customer Center. • Flashing twice every 3 seconds : - Turn on the power with the ⏻ button. - The temperature of the display rises (or falls) depend on operation environment. Check the environmental conditions and do not use in direct sunlight. - If the power still does not turn on, contact Canon Customer Center.	24 111
The power suddenly goes off when a DC power supply is used.	• Depending on the model of DC power supply used, the output voltage may decrease suddenly and even turn off (0 V output) when a threshold value is reached. Before that, a warning message about low input voltage may be displayed only briefly or not at all. Connect a charged DC power supply or AC power supply.	—
The image does not display.	• Set each item in [Channel Settings] according to input signal.	69
The 3G-SDI RAW signal image does not display.	• At times the 3G-SDI RAW signal image may not display, depending on the type of the Cinema EOS camera. Refer to the Canon website for a list of supported products.	—
There is a blank area when set to Quad Input/Dual Input.	• There may be no input signal. Check the signal. • V1710 Signals with different resolution or frequency may be input from each terminal. Check the signal. • V1711 Some combinations are not supported. Check the signal.	22 73, 110
The image appears to be delayed.	• When [Reduce Backlight Flash] is set to [On], the displayed image may be delayed depending on the scene. In such case, change the setting to [Off].	105
Video paused temporarily	The screen may pause when running [Capture] via a web browser. When [Capture] is complete, or turning [Web] ➤ [Control] to [Off] will return to normal screen.	45

Symptom	Cause and Action	📖
Screen is too bright/dark.	• Adjust the [Contrast] on the OSD menu. • OPTION Adjust the settings for [Boost Contrast] on the OSD menu. • There is a limit on the service life of LCD backlight. If the screen becomes dark or starts flickering, contact Canon Customer Center.	53 59
Burn-in image appears.	• This is a characteristic of the LCD panel and you should avoid displaying stationary image for a long time.	—
There is an unlit or red, blue, green, or white dot on screen.	• LCD display is made of very high precision technology. It has effective pixels of 99.99% or more, but there may be black dots or red, blue, or green dots that may be always on. This is not a failure.	—
There is an interference pattern or trace that remains when the LCD panel is pressed.	• The symptom may be resolved by displaying a white or black image on the entire screen.	—
OSD menu cannot be used.	• Check that [Protect Settings] is not set.	104
[Aspect Marker], [Safety Zone Marker] or [Area Marker] does not appear.	• A channel with no signal, unsupported signal, or with [Input Configuration] not set may be selected. Check the signal.	110
The fan starts to rotate even when [Fan] under [Camera Link] is set to [On] or [Fan Stop] is set to [On].	• The fan stays off for approx. 1 minute when an AC power supply is used. To keep the fan off for a longer period, use a DC power supply. • The fan operates to lower the temperature inside the main unit. The fan stops operating when the temperature inside has lowered. • When [Fan] under [Camera Link] is set to [On], the down time may not match the camera.	92 105
The fan does not stop even when [Fan] under [Camera Link] is set to [On] or [Fan Stop] is set to [On].	• The fan does not stop if the temperature inside the main unit is high. Configure settings after the internal temperature has lowered. • The fan may not stop in some conditions, for example when used at a high temperature. Use the video display at the operating temperature (📖111) or lower.	92 105
Loud fan noise	• The fan operates at a faster speed than usual to lower the internal temperature if [Fan Control] is set to [On] and when the temperature inside the main unit has increased. The fan operates at normal speed when [Fan Control] is set to [Off]. • When high-luminance content is displayed continuously, the temperature inside the main unit rises even if the operating temperature is within the recommended range, and the fan operates at a faster speed than usual to lower the internal temperature. It is recommended to lower the brightness of the video display.	105
You forgot the password for [Protect Settings].	• Press the jog dial and the ⏻ button while the video display is in standby. The configuration will be reset to the state where no password is set.	12

Symptom	Cause and Action	📖
The video display does not start up in the condition that the power was turned off last time.	• Check the [Power on Setting] on the OSD menu. Set [Last memory] to start up the video display in the condition that the power is turned off last time.	106
The image quality for the User mode in [Picture Mode] differs from the image quality of presets.	• Select the preset mode by [Copy Picture Mode] and copy the settings.	61
Image quality on the left and right screens is different.	• Check the [Channel Settings] ➤ [Picture Mode] settings.	31 71
Image quality is automatically changed.		
The same image is displayed in two screens.	• Check the [Channel Settings] ➤ [Single Input Dual View] settings.	72

Software Used in This Product

Software installed with this product includes software modules from Canon or third parties.

Software Developed by Canon and Free Software

Software developed or created by Canon and accompanying document is protected by copyright law, terms of an international convention and any other governing laws.
This product uses software modules under copyright by third parties and distributed as free software. Some of these software modules are subject to the GNU General Public License v2 (GPL), GNU Lesser General Public License v2.1 (LGPL) or any other license.

Free software modules installed with this product

- linux kernel
- SquashFS
- avahi-autoipd
- Newlib(libc)
- openssl
- dhcpd
- busybox
- FUSE
- libxml
- Newlib(libm)
- libnl
- hostapd
- glibc
- libfuse
- zlib
- wireless_tools
- RealTek_WiFi_linux driver
- JFFS2
- libupnp
- libpng
- wpa_supplicant

Acquiring Source Code for Free Software

Some free software requires the acquirement of the source code of modules in order to distribute the executable form of those software modules. For information on how to acquire the source code for free software such as these and confirming terms of the GPL, LGPL and other license agreements, please check with the distributor from whom the product was purchased.

License Agreement for this Product

Obligation to Present License Agreement

The copyright holders of software modules installed with this product require its license agreement to be displayed. This license agreement is as follows:

■libupnp License

Copyright (c) 2000-2003 Intel Corporation All rights reserved.

Redistribution and use in source and binary forms, with or without modification, are permitted provided that the following conditions are met:

* Redistributions of source code must retain the above copyright notice, this list of conditions and the following disclaimer.
* Redistributions in binary form must reproduce the above copyright notice, this list of conditions and the following disclaimer in the documentation and/or other materials provided with the distribution.
* Neither name of Intel Corporation nor the names of its contributors may be used to endorse or promote products derived from this software without specific prior written permission.

THIS SOFTWARE IS PROVIDED BY THE COPYRIGHT HOLDERS AND CONTRIBUTORS "AS IS" AND ANY EXPRESS OR IMPLIED WARRANTIES, INCLUDING, BUT NOT LIMITED TO, THE IMPLIED WARRANTIES OF MERCHANTABILITY AND FITNESS FOR A PARTICULAR PURPOSE ARE DISCLAIMED. IN NO EVENT SHALL INTEL OR CONTRIBUTORS BE LIABLE FOR ANY DIRECT, INDIRECT, INCIDENTAL, SPECIAL, EXEMPLARY, OR CONSEQUENTIAL DAMAGES (INCLUDING, BUT NOT LIMITED TO, PROCUREMENT OF SUBSTITUTE GOODS OR SERVICES; LOSS OF USE, DATA, OR PROFITS; OR BUSINESS INTERRUPTION) HOWEVER CAUSED AND ON ANY THEORY OF LIABILITY, WHETHER IN CONTRACT, STRICT LIABILITY, OR TORT (INCLUDING NEGLIGENCE OR OTHERWISE) ARISING IN ANY WAY OUT OF THE USE OF THIS SOFTWARE, EVEN IF ADVISED OF THE POSSIBILITY OF SUCH DAMAGE.

■libxml License

Copyright (C) 1998-2003 Daniel Veillard. All Rights Reserved.

Permission is hereby granted, free of charge, to any person obtaining a copy of this software and associated documentation files (the "Software"), to deal in the Software without restriction, including without limitation the rights to use, copy, modify, merge, publish, distribute, sublicense, and/or sell copies of the Software, and to permit persons to whom the Software is furnished to do so, subject to the following conditions:

The above copyright notice and this permission notice shall be included in all copies or substantial portions of the Software.

THE SOFTWARE IS PROVIDED "AS IS", WITHOUT WARRANTY OF ANY KIND, EXPRESS OR IMPLIED, INCLUDING BUT NOT LIMITED TO THE WARRANTIES OF MERCHANTABILITY, FITNESS FOR A PARTICULAR PURPOSE AND NONINFRINGEMENT. IN NO EVENT SHALL THE DANIEL VEILLARD BE LIABLE FOR ANY CLAIM, DAMAGES OR OTHER LIABILITY, WHETHER IN AN ACTION OF CONTRACT, TORT OR OTHERWISE, ARISING FROM, OUT OF OR IN CONNECTION WITH THE SOFTWARE OR THE USE OR OTHER DEALINGS IN THE SOFTWARE.

Except as contained in this notice, the name of Daniel Veillard shall not be used in advertising or otherwise to promote the sale, use or other dealings in this Software without prior written authorization from him.

■Newlib(libc) License

Copyright (c) 1990 The Regents of the University of California. All rights reserved.

Redistribution and use in source and binary forms are permitted provided that the above copyright notice and this paragraph are duplicated in all such forms and that any documentation, and other materials related to such distribution and use acknowledge that the software was developed by the University of California, Berkeley. The name of the University may not be used to endorse or promote products derived from this software without specific prior written permission.

THIS SOFTWARE IS PROVIDED "AS IS" AND WITHOUT ANY EXPRESS OR IMPLIED WARRANTIES, INCLUDING, WITHOUT LIMITATION, THE IMPLIED WARRANTIES OF MERCHANTABILITY AND FITNESS FOR A PARTICULAR PURPOSE.

Copyright (c) 1991, 2000 The Regents of the University of California. All rights reserved.

Redistribution and use in source and binary forms, with or without modification, are permitted provided that the following conditions are met:

1. Redistributions of source code must retain the above copyright notice, this list of conditions and the following disclaimer.
2. Redistributions in binary form must reproduce the above copyright notice, this list of conditions and the following disclaimer in the documentation and/or other materials provided with the distribution.

3. All advertising materials mentioning features or use of this software must display the following acknowledgement:
   This product includes software developed by the University of California, Berkeley and its contributors.
4. Neither the name of the University nor the names of its contributors may be used to endorse or promote products derived from this software without specific prior written permission.

THIS SOFTWARE IS PROVIDED BY THE REGENTS AND CONTRIBUTORS "AS IS" AND ANY EXPRESS OR IMPLIED WARRANTIES, INCLUDING, BUT NOT LIMITED TO, THE IMPLIED WARRANTIES OF MERCHANTABILITY AND FITNESS FOR A PARTICULAR PURPOSE ARE DISCLAIMED. IN NO EVENT SHALL THE REGENTS OR CONTRIBUTORS BE LIABLE FOR ANY DIRECT, INDIRECT, INCIDENTAL, SPECIAL, EXEMPLARY, OR CONSEQUENTIAL DAMAGES (INCLUDING, BUT NOT LIMITED TO, PROCUREMENT OF SUBSTITUTE GOODS OR SERVICES; LOSS OF USE, DATA, OR PROFITS; OR BUSINESS INTERRUPTION) HOWEVER CAUSED AND ON ANY THEORY OF LIABILITY, WHETHER IN CONTRACT, STRICT LIABILITY, OR TORT (INCLUDING NEGLIGENCE OR OTHERWISE) ARISING IN ANY WAY OUT OF THE USE OF THIS SOFTWARE, EVEN IF ADVISED OF THE POSSIBILITY OF SUCH DAMAGE.

■Newlib(libm) License

Copyright (C) 1993 by Sun Microsystems, Inc. All rights reserved.

Developed at SunPro, a Sun Microsystems, Inc. business.
Permission to use, copy, modify, and distribute this software is freely granted, provided that this notice is preserved.

■openssl

Copyright (C) 1998-2017 The OpenSSL Project. All rights reserved.

Redistribution and use in source and binary forms, with or without modification, are permitted provided that the following conditions are met:
1. Redistributions of source code must retain the above copyright notice, this list of conditions and the following disclaimer.
2. Redistributions in binary form must reproduce the above copyright notice, this list of conditions and the following disclaimer in the documentation and/or other materials provided with the distribution.
3. All advertising materials mentioning features or use of this software must display the following acknowledgment:
   "This product includes software developed by the OpenSSL Project for use in the OpenSSL Toolkit. (http://www.openssl.org/)"
4. The names "OpenSSL Toolkit" and "OpenSSL Project" must not be used to endorse or promote products derived from this software without prior written permission. For written permission, please contact openssl-core@openssl.org.
5. Products derived from this software may not be called "OpenSSL" nor may "OpenSSL" appear in their names without prior written permission of the OpenSSL Project.
6. Redistributions of any form whatsoever must retain the following acknowledgment:
   "This product includes software developed by the OpenSSL Project for use in the OpenSSL Toolkit (http://www.openssl.org/)"

THIS SOFTWARE IS PROVIDED BY THE OpenSSL PROJECT "AS IS" AND ANY EXPRESSED OR IMPLIED WARRANTIES, INCLUDING, BUT NOT LIMITED TO, THE IMPLIED WARRANTIES OF MERCHANTABILITY AND FITNESS FOR A PARTICULAR PURPOSE ARE DISCLAIMED. IN NO EVENT SHALL THE OpenSSL PROJECT OR ITS CONTRIBUTORS BE LIABLE FOR ANY DIRECT, INDIRECT, INCIDENTAL, SPECIAL, EXEMPLARY, OR CONSEQUENTIAL DAMAGES (INCLUDING, BUT NOT LIMITED TO, PROCUREMENT OF SUBSTITUTE GOODS OR SERVICES; LOSS OF USE, DATA, OR PROFITS; OR BUSINESS INTERRUPTION) HOWEVER CAUSED AND ON ANY THEORY OF LIABILITY, WHETHER IN CONTRACT, STRICT LIABILITY, OR TORT (INCLUDING NEGLIGENCE OR OTHERWISE) ARISING IN ANY WAY OUT OF THE USE OF THIS SOFTWARE, EVEN IF ADVISED OF THE POSSIBILITY OF SUCH DAMAGE.

Copyright (C) 1995-1998 Eric Young (eay@cryptsoft.com)
All rights reserved.

This package is an SSL implementation written by Eric Young (eay@cryptsoft.com).
The implementation was written so as to conform with Netscapes SSL.

This library is free for commercial and non-commercial use as long as the following conditions are aheared to. The following conditions apply to all code found in this distribution, be it the RC4, RSA, lhash, DES, etc., code; not just the SSL code. The SSL documentation included with this distribution is covered by the same copyright terms except that the holder is Tim Hudson (tjh@cryptsoft.com).

Copyright remains Eric Young's, and as such any Copyright notices in the code are not to be removed. If this package is used in a product, Eric Young should be given attribution as the author of the parts of the library used. This can be in the form of a textual message at program startup or in documentation (online or textual) provided with the package.

Redistribution and use in source and binary forms, with or without modification, are permitted provided that the following conditions are met:

1. Redistributions of source code must retain the copyright notice, this list of conditions and the following disclaimer.
2. Redistributions in binary form must reproduce the above copyright notice, this list of conditions and the following disclaimer in the documentation and/or other materials provided with the distribution.
3. All advertising materials mentioning features or use of this software must display the following acknowledgement:
   "This product includes cryptographic software written by Eric Young (eay@cryptsoft.com)"
   The word 'cryptographic' can be left out if the rouines from the library being used are not cryptographic related :-).
4. If you include any Windows specific code (or a derivative thereof) from the apps directory (application code) you must include an acknowledgement:
   "This product includes software written by Tim Hudson (tjh@cryptsoft.com)"

THIS SOFTWARE IS PROVIDED BY ERIC YOUNG "AS IS" AND ANY EXPRESS OR IMPLIED WARRANTIES, INCLUDING, BUT NOT LIMITED TO, THE IMPLIED WARRANTIES OF MERCHANTABILITY AND FITNESS FOR A PARTICULAR PURPOSE ARE DISCLAIMED. IN NO EVENT SHALL THE AUTHOR OR CONTRIBUTORS BE LIABLE FOR ANY DIRECT, INDIRECT, INCIDENTAL, SPECIAL, EXEMPLARY, OR CONSEQUENTIAL DAMAGES (INCLUDING, BUT NOT LIMITED TO, PROCUREMENT OF SUBSTITUTE GOODS OR SERVICES; LOSS OF USE, DATA, OR PROFITS; OR BUSINESS INTERRUPTION) HOWEVER CAUSED AND ON ANY THEORY OF LIABILITY, WHETHER IN CONTRACT, STRICT LIABILITY, OR TORT (INCLUDING NEGLIGENCE OR OTHERWISE) ARISING IN ANY WAY OUT OF THE USE OF THIS SOFTWARE, EVEN IF ADVISED OF THE POSSIBILITY OF SUCH DAMAGE.

The licence and distribution terms for any publically available version or derivative of this code cannot be changed. i.e. this code cannot simply be copied and put under another distribution licence [including the GNU Public Licence.]

■wpa_supplicant, hostapd

Copyright (C) 2002-2016, Jouni Malinen <j@w1.fi> and contributors
All Rights Reserved.

This software may be distributed, used, and modified under the terms of BSD license:

Redistribution and use in source and binary forms, with or without modification, are permitted provided that the following conditions are met:

1. Redistributions of source code must retain the above copyright notice, this list of conditions and the following disclaimer.
2. Redistributions in binary form must reproduce the above copyright notice, this list of conditions and the following disclaimer in the documentation and/or other materials provided with the distribution.

3. Neither the name(s) of the above-listed copyright holder(s) nor the names of its contributors may be used to endorse or promote products derived from this software without specific prior written permission.

THIS SOFTWARE IS PROVIDED BY THE COPYRIGHT HOLDERS AND CONTRIBUTORS "AS IS" AND ANY EXPRESS OR IMPLIED WARRANTIES, INCLUDING, BUT NOT LIMITED TO, THE IMPLIED WARRANTIES OF MERCHANTABILITY AND FITNESS FOR A PARTICULAR PURPOSE ARE DISCLAIMED. IN NO EVENT SHALL THE COPYRIGHT OWNER OR CONTRIBUTORS BE LIABLE FOR ANY DIRECT, INDIRECT, INCIDENTAL, SPECIAL, EXEMPLARY, OR CONSEQUENTIAL DAMAGES (INCLUDING, BUT NOT LIMITED TO, PROCUREMENT OF SUBSTITUTE GOODS OR SERVICES; LOSS OF USE, DATA, OR PROFITS; OR BUSINESS INTERRUPTION) HOWEVER CAUSED AND ON ANY THEORY OF LIABILITY, WHETHER IN CONTRACT, STRICT LIABILITY, OR TORT (INCLUDING NEGLIGENCE OR OTHERWISE) ARISING IN ANY WAY OUT OF THE USE OF THIS SOFTWARE, EVEN IF ADVISED OF THE POSSIBILITY OF SUCH DAMAGE.

Copyright (c) 2004-2014 by Internet Systems Consortium, Inc. ("ISC")
Copyright (c) 1995-2003 by Internet Software Consortium

Permission to use, copy, modify, and distribute this software for any purpose with or without fee is hereby granted, provided that the above copyright notice and this permission notice appear in all copies.

THE SOFTWARE IS PROVIDED "AS IS" AND ISC DISCLAIMS ALL WARRANTIES WITH REGARD TO THIS SOFTWARE INCLUDING ALL IMPLIED WARRANTIES OF MERCHANTABILITY AND FITNESS. IN NO EVENT SHALL ISC BE LIABLE FOR ANY SPECIAL, DIRECT, INDIRECT, OR CONSEQUENTIAL DAMAGES OR ANY DAMAGES WHATSOEVER RESULTING FROM LOSS OF USE, DATA OR PROFITS, WHETHER IN AN ACTION OF CONTRACT, NEGLIGENCE OR OTHER TORTIOUS ACTION, ARISING OUT OF OR IN CONNECTION WITH THE USE OR PERFORMANCE OF THIS SOFTWARE.

Internet Systems Consortium, Inc.
950 Charter Street
Redwood City, CA 94063
<info@isc.org>
https://www.isc.org/

Index

Number

2 Sample Interleave 70
3G-SDI RAW 69
200% (Screen Scaling) 74
2020 Constant Luminance 60
2020 Gamut Mapping 60
2020 Outside of Gamut View 98

A

ACESproxy 53
Adjustment 53
Adobe RGB 53
Anamorphic 74, 92
Anchor Adjustment 29, 62
Area Marker 82
Area Marker (Camera Link) 92
Aspect Marker 79
Audio Input 71
Audio Level Meter 84
Audio Settings 78
Automatic Adjustment
(CINEMA EOS/ARRI/VARICAM) 91

B

Backlight Control 53, 105
Banner 104
Bias R/G/B 54
Bicubic 75
Black (Test Pattern) 90
Blue Off 99
Blue Only 99
Boost Contrast OPTION 59
Brightness 53
Button Name Lighting Time 105

C

Calibration 32, 61
Camera Information 92
Camera Link 91
Canon Log, CanonLog 2, Canon Log 3 55
CDL Export/CDL Import 35
CDL/User LUT 58
CDL/User LUT Bypass 58
Center Marker 82
Channel Name 71
Channel Settings 69
Chroma 53
CINEMA EOS SYSTEM (Picture Mode) 53
Cinema Gamut to 709 54
Cinema Gamut to 2020 54
Cinema Gamut to DCI 54
Color Bars (Test Pattern) 90
Color Gamut 54
Color Range 57, 105
Color Temperature 54
Compare View 99
Compatible Settings 105
Contrast 53
Copy Picture Mode 61
Custom (xy) (Color Temperature) 54

D

Date/Time 36, 103
DCI-P3 53
DCI-P3+ to 709 54
DCI-P3+ to DCI 54
Detail Settings
  Adjustment 59
  CDL/User LUT 58
Display Button LED 105
Display Channel 103
Display Function/Display Function (CDL) 103
Display Name 36, 104
Display Setting Link 102
Display Settings 74
Dual Input 69
Dual Link 3G-SDI 70

E

EBU 53
Export/Import 34, 106

F

False Color 97
Fan (Camera Link) 92

Fan Settings 105
Film Cadence 76
Firmware/License Update 105
Firmware/License Ver. 110
Format 70
Frame Hold 76
Frame Luminance Monitor 88
Function Button Guide 104
Function/Channel Button 103
Function Settings 84

G

Gain R/G/B 54
Gamma/EOTF 55
Gamma LUT 55
Gamut LUT 54
Global Dimming 53
Gray (Test Pattern) 90
Green Off 99
Grid Marker 83

H

HDMI 13, 23, 105
HDMI Link 61
HDR Range 56
HDR/SDR View 60
Hide OSD 109
Histogram 87
Hybrid Log-Gamma 55
Hybrid Log-Gamma System 60

I

Image Division 70
Image Priority 76
In Monitor Display 102
Input Configuration 69
Input Transform 57
Internal Sync 71
I/P Conversion 76
I/PsF 76
ITU-R BT.709 53
ITU-R BT.1886 55
ITU-R BT.2020 53

L

LAN 13
Language 103
LAN (Network/IMD Settings) 101
Link Order 70
Local Dimming 53
LTC 84
LUT Import 33, 59

M

MAC Address 110
Marker Preset 79
Marker Settings 79
Marker/TC/CameraInfo Input 71
Monochrome 99
Multi View (Dual/Quad) 70

N

Native Input Resolution (Screen Scaling) 74
Nearest Neighbor 75
Network/IMD Settings 101

O

Offset 58
OSD Brightness 104
OSD Menu 26, 48
OSD Settings 104
Output Transform 57
Output Transform Surround 57
Over Range 98

P

Password 101, 104
Peaking 97
Picture Function Settings 97
Picture Mode 53, 71
Pixel Value Check 89
PLUGE (Test Pattern) 90
Power 58
Power Indicator Brightness 105
Power Indicator/Button LED Settings 105

Power on Setting 106
Protect Settings 104
PsF 76

Q

Quad Input 69

R

Ramp (Test Pattern) 90
Red Off 99
Remote(GPI) 103
Reset 62
Reset All Settings 106

S

Safety Zone Marker 1, 2 80
Saturation 58
Scaling Method 75
Screen Capture 91
Screen Scaling 74
SDI 13, 22
Select Channel 69
Select Input Signal 69
Separator 72
Serial No. 110
Shape Trace 75
Sharpness 53
Signal Information 110
Signal Monitoring 90
Single Input 69
Single Input Dual View 72
Slope 58
SMPTE-C 53
Speed Priority 76
Square Division 70
Subnet Mask 101
System Information 110
System Settings 103

T

Tally (Camera Link) 92
Tally light 12
Test Pattern 90
Time Code 84

U

Usage Time 110
USB 12
User 1–7 53
User LUT 58, 105

V

Vector Scope 86
Video Position (Multi View) 75
VITC 84

W

Wave Form Monitor 85
Web 45, 101
White (Test Pattern) 90
Wi-Fi 43, 101

Y

YCbCr Color Matrix 60

Z

Zoom 75

USA

CANON PROFESSIONAL DISPLAY LIMITED WARRANTY FOR PRODUCTS PURCHASED IN THE UNITED STATES

The limited warranty set forth below is given by Canon U.S.A., Inc. ('Canon USA') with respect to Canon Professional Display Equipment (the 'Equipment') accompanying this limited warranty in the Equipment's original container, when purchased in the United States. This limited warranty is only effective upon presentation of your Bill of Sale or other proof of purchase.
Canon USA warrants to the original end-user purchaser, when delivered in new condition in its original container, that the Equipment will be free from defects in materials and workmanship under normal use and service for a period of ONE-YEAR from the date of original purchase. When returning Equipment under this warranty, you must pre-pay the shipping charges, and you must enclose a copy of the Bill of Sale or other proof of purchase with a complete explanation of the problem. Equipment returned to a Canon USA factory service facility, and proven to be defective upon inspection, will be, without charge,:
(a) repaired utilizing new or comparable refurbished parts, or
(b) exchanged for refurbished or new Equipment
as determined in the Canon USA's repair facility's sole discretion. The repaired or exchanged Equipment will be shipped back free of charge. Warranty exchange or replacement does not extend the original warranty period of the Equipment. For repairs after the warranty period has expired, an estimate of the cost of repair and an opportunity to approve or reject the repair expense before it is incurred will be provided. If you approve, repairs will be made and the Equipment will be returned at your risk and expense. If you reject, the Equipment will be returned to you at no charge to you to an address within the United States.

This limited warranty only applies if the Equipment is used in conjunction with compatible computer equipment, compatible peripheral equipment and compatible software, as to which items Canon USA will have no responsibility. Canon USA shall have no responsibility under this limited warranty for use of the Equipment in conjunction with incompatible peripheral equipment and/or incompatible software. Non-Canon brand peripheral equipment and software which may be distributed with, or be factory loaded on, the Equipment, are sold 'AS IS' without warranty of any kind by Canon USA, including any implied warranty regarding merchantability or fitness for a particular purpose. The sole warranty with respect to such non-Canon brand items is given by the manufacturer or producer thereof. If the Equipment contains a hard disk drive, Canon USA recommends that data stored on that drive be duplicated or backed up to prevent its loss in the event of failure or other malfunction of such drive.

In order to obtain warranty service, please contact the authorized Canon retail dealer from whom you purchased the Equipment or contact the CANON INFORMATION CENTER AT **855-4K-CANON** (855-452-2666) or on the internet at **pro.usa.canon.com/support**. You will be directed to the nearest service facility for your Equipment.

Technical support program specifics subject to change without notice.

This Limited Warranty covers all defects encountered in normal use of the Equipment and does not apply in the following cases:

A. Loss or damage to the Equipment due to abuse, neglect, mishandling, electric current fluctuation, accident, improper maintenance, use of non-Canon accessories or failure to follow operating, maintenance or environmental instructions prescribed in Canon USA's user's manual;
B. If the Equipment is defective as a result of sand, dirt or water damage;
C. If defects or damages are caused by the use of parts or supplies (other than those sold by Canon USA) that cause damage to the Equipment or that cause abnormally frequent service calls or service problems;
D. If defects or damages are caused by service other than Canon USA's factory service centers or authorized service facilities;
E. Any internal modification to product hardware or firmware;
F. Any maintenance of the Equipment, including any fees for such Maintenance;
G. If the Equipment has had its serial number or dating altered or removed.

This Limited Warranty does not apply to Equipment purchased outside the United States. This Limited Warranty does not apply to accessories or consumables for the Equipment, which are sold "AS IS", without warranty of any kind by Canon USA. Please retain this warranty card and your Bill of Sale as a permanent record of your purchase. This card ensures that you are contacted promptly should there be a safety inspection, modification or product recall under applicable laws or regulations.This card ensures that you are contacted promptly should there be a safety inspection, modification or product recall under applicable laws or regulations.

NO IMPLIED WARRANTY, INCLUDING MERCHANTABILITY AND FITNESS FOR A PARTICULAR PURPOSE APPLIES TO THIS EQUIPMENT AFTER THE APPLICABLE PERIOD OF EXPRESS WARRANTY OR GUARANTY UNDER THIS WARRANTY (EXCEPT AS MENTIONED ABOVE). (SOME STATES DO NOT ALLOW LIMITATIONS ON HOW LONG AN IMPLIED WARRANTY LASTS, SO THE ABOVE LIMITATION OR EXCLUSION MAY NOT APPLY TO YOU). CANON USA SHALL NOT BE LIABLE FOR LOSS OF REVENUES OR PROFITS, EXPENSE FOR SUBSTITUTE EQUIPMENT OR SERVICE, STORAGE CHARGES, LOSS OR CORRUPTION OF DATA, INCLUDING WITHOUT LIMITATION, LOSS OR CORRUPTION OF DATA STORED ON THE EQUIPMENT'S HARD DRIVE, OR ANY OTHER SPECIAL, INCIDENTAL OR CONSEQUENTIAL DAMAGES CAUSED BY THE USE, MISUSE OR INABILITY TO USE THE EQUIPMENT, REGARDLESS OF THE LEGAL THEORY ON WHICH THE CLAIM IS BASED, AND EVEN IF CANON USA HAS BEEN ADVISED OF THE POSSIBILITY OF SUCH DAMAGES. NOR SHALL RECOVERY OF ANY KIND AGAINST CANON USA BE GREATER THAN THE PURCHASE PRICE OF THE EQUIPMENT SOLD BY CANON USA AND CAUSING THE ALLEGED DAMAGE. WITHOUT LIMITING THE FOREGOING, YOU ASSUME ALL RISK AND LIABILITY FOR LOSS, DAMAGE OR INJURY TO YOU AND YOUR PROPERTY AND TO OTHERS AND THEIR PROPERTY ARISING OUT OF USE, MISUSE OR INABILITY TO USE THE EQUIPMENT NOT CAUSED DIRECTLY BY THE NEGLIGENCE OF CANON USA (SOME STATES DO NOT ALLOW THE EXCLUSION OR LIMITATION OF INCIDENTAL OR CONSEQUENTIAL DAMAGES, SO THE ABOVE LIMITATION MAY NOT APPLY TO YOU). THIS WARRANTY SHALL NOT EXTEND TO ANYONE OTHER THAN THE ORIGINAL PURCHASER OF THIS EQUIPMENT OR THE PERSON FOR WHOM IT WAS PURCHASED AS A GIFT.

This warranty gives you specific legal rights, and you may also have other rights which vary from state to state.

CANON U.S.A., INC

CANADA

CANON PROFESSIONAL DISPLAY LIMITED WARRANTY FOR PRODUCTS PURCHASED IN CANADA

The limited warranty set forth below is given by Canon Canada Inc. ('Canon Canada') with respect to Canon Professional Display Equipment (the 'Equipment') accompanying this limited warranty in the Equipment's original container, when purchased in Canada. This limited warranty is only effective upon presentation of your bill of sale or other proof of purchase.
Canon Canada warrants to the original end-user purchaser, when delivered in new condition in its original container, that the Equipment will be free from defects in materials and workmanship under normal use and service for a period of ONE YEAR from the date of original purchase. When returning Equipment under this limited warranty, you must pre-pay the shipping charges, and you must enclose a copy of the bill of sale or other proof of purchase with a complete explanation of the problem. Equipment returned to a Canon Canada factory service facility and proven to be defective upon inspection will be, without charge:
(a) repaired utilizing new or comparable refurbished parts, or
(b) exchanged for refurbished or new Equipment,
as determined by the Canon Canada factory service center, in its sole discretion. The repaired or exchanged Equipment will be shipped back free of charge. Warranty exchange or replacement does not extend the original warranty period of the Equipment. For repairs after the warranty period has expired, an estimate of the cost of repair and an opportunity to approve or reject the repair expense before it is incurred will be provided. If you approve the proposed repairs, repairs will be made and the Equipment will be returned at your risk and expense. If you reject the proposed repairs, the Equipment will be returned to you at no charge to you to an address within Canada.

This limited warranty only applies if the Equipment is used in conjunction with compatible computer equipment, compatible peripheral equipment and compatible software, as to which items Canon Canada will have no responsibility. Canon Canada shall have no responsibility under this limited warranty for use of the Equipment in conjunction with incompatible computer equipment, peripheral equipment and/or incompatible software. Non-Canon brand peripheral equipment and software which may be distributed with, or be factory loaded on, the Equipment, are sold 'AS IS' without warranty or condition of any kind by Canon Canada, including any implied warranty or condition regarding merchantability or fitness for a particular purpose. The sole warranty with respect to such non-Canon brand items is given by the manufacturer or producer thereof. If the Equipment contains a hard disk drive, Canon Canada recommends that data stored on that drive be duplicated or backed up to prevent its loss in the event of failure or other malfunction of such drive.

In order to obtain warranty service, please contact the authorized Canon retail dealer from whom you purchased the Equipment or contact the CANON INFORMATION CENTER at **800-667-2666** or on the internet at **www.canon.ca/pro**.

Technical support program specifics are subject to change without notice.

This limited warranty covers all defects encountered in normal use of the Equipment and does not apply in the following cases:

A. Loss or damage to the Equipment due to abuse, neglect, mishandling, electric current fluctuation, accident, improper maintenance, use of non-Canon accessories or failure to follow operating, maintenance or environmental instructions prescribed in Canon Canada's users manual;
B. If the Equipment is defective as a result of sand, dirt or water damage;
C. If defects or damages are caused by the use of parts or supplies (other than those sold by Canon Canada) that cause damage to the Equipment or that cause abnormally frequent service calls or service problems
D. If defects or damages are caused by service other than Canon Canada's factory service centers or authorized service facilities;
E. Any internal modification to product hardware or firmware;
F. Any maintenance of the Equipment, including any fees for such maintenance; or
G. If the Equipment has had its serial number or dating altered or removed.

This limited warranty does not apply to Equipment purchased outside Canada. This limited warranty does not apply to accessories or consumables for the Equipment, which are sold "AS IS", without warranty or condition of any kind by Canon Canada. Please retain this warranty card and your bill of sale or other proof of purchase as a permanent record of your purchase. This card ensures that you are contacted promptly should there be a safety inspection, modification or product recall under applicable laws or regulations.

NO IMPLIED WARRANTY OR CONDITION, INCLUDING IN RESPECT OF THE MERCHANTABILITY AND FITNESS FOR A PARTICULAR PURPOSE, APPLIES TO THIS EQUIPMENT AFTER THE EXPIRATION OF THE APPLICABLE PERIOD OF EXPRESS WARRANTY OR GUARANTEE UNDER THIS LIMITED WARRANTY (EXCEPT AS MENTIONED ABOVE). (SOME PROVINCES DO NOT ALLOW LIMITATIONS ON HOW LONG AN IMPLIED WARRANTY LASTS, SO THE ABOVE LIMITATION OR EXCLUSION MAY NOT APPLY TO YOU). CANON CANADA SHALL NOT BE LIABLE FOR LOSS OF REVENUES OR PROFITS, EXPENSE FOR SUBSTITUTE EQUIPMENT OR SERVICE, STORAGE CHARGES, LOSS OR CORRUPTION OF DATA, INCLUDING WITHOUT LIMITATION, LOSS OR CORRUPTION OF DATA STORED ON THE EQUIPMENT'S HARD DRIVE, OR ANY OTHER SPECIAL, INCIDENTAL OR CONSEQUENTIAL DAMAGES CAUSED BY THE USE, MISUSE OR INABILITY TO USE THE EQUIPMENT, REGARDLESS OF THE LEGAL THEORY ON WHICH THE CLAIM IS BASED, AND EVEN IF CANON CANADA HAS BEEN ADVISED OF THE POSSIBILITY OF SUCH DAMAGES. NOR SHALL RECOVERY OF ANY KIND AGAINST CANON CANADA BE GREATER THAN THE PURCHASE PRICE OF THE EQUIPMENT SOLD BY CANON CANADA AND CAUSING THE ALLEGED DAMAGE. WITHOUT LIMITING THE FOREGOING, YOU ASSUME ALL RISK AND LIABILITY FOR LOSS, DAMAGE OR INJURY TO YOU AND YOUR PROPERTY AND TO OTHERS AND THEIR PROPERTY ARISING OUT OF USE, MISUSE OR INABILITY TO USE THE EQUIPMENT NOT CAUSED DIRECTLY BY THE NEGLIGENCE OF CANON CANADA (SOME PROVINCES DO NOT ALLOW THE EXCLUSION OR LIMITATION OF INCIDENTAL OR CONSEQUENTIAL DAMAGES, SO THE ABOVE LIMITATION MAY NOT APPLY TO YOU). THIS LIMITED WARRANTY SHALL NOT EXTEND TO ANYONE OTHER THAN THE ORIGINAL PURCHASER OF THIS EQUIPMENT OR THE PERSON FOR WHOM IT WAS PURCHASED AS A GIFT.

This limited warranty gives you specific legal rights, and you may also have other rights which vary from province to province.

CANON CANADA INC.

Canon Inc. 30-2, Shimomaruko 3-chome, Ohta-ku, Tokyo 146-8501, Japan
Canon Europa N.V. Bovenkerkerweg 59, 1185 XB Amstelveen, The Netherlands http://www.canon-europe.com

USA http://pro.usa.canon.com
CANON U.S.A., INC.
http://pro.usa.canon.com/support
(855) 4K-CANON (855-452-2666)
(USA only)

UNITED KINGDOM
Canon UK Ltd
Unit 160, Centennial Park, Centennial Avenue,
Elstree, Hertfordshire, WD6 3SG
020-7660-0186

MIE-0014-000D
© CANON INC. 2022