Canon

PUB. DIE-0470-000F

4K Camcorder

XC10

Instruction Manual

Firmware ver. 1.0.3.0

4K MP4 XF-AVC HDMI Wi Fi CERTIFIED

PAL

Important Usage Instructions

WARNING
TO REDUCE THE RISK OF ELECTRIC SHOCK AND TO REDUCE ANNOYING INTERFERENCE, USE THE RECOMMENDED ACCESSORIES ONLY.

COPYRIGHT WARNING:
Unauthorized recording of copyrighted materials may infringe on the rights of copyright owners and be contrary to copyright laws.

Trademark Acknowledgements

- SD, SDHC and SDXC Logos are trademarks of SD-3C, LLC.
- Canon is an authorized licensee of the CFast 2.0™ trademark, which may be registered in various jurisdictions.
- Microsoft and Windows are trademarks or registered trademarks of Microsoft Corporation in the United States and/or other countries.
- Apple, App Store, Mac OS, Final Cut Pro are trademarks of Apple Inc., registered in the U.S. and other countries.
- IOS is a trademark or registered trademark of Cisco in the U.S. and other countries and is used under license.
- Avid and Media Composer are trademarks or registered trademarks of Avid Technology, Inc. or its subsidiaries in the United States and/or other countries.
- Wi-Fi is a registered trademark of the Wi-Fi Alliance.
- Wi-Fi Certified, WPA, WPA2, and the Wi-Fi Certified logo are trademarks of the Wi-Fi Alliance.
- WPS as used on the camcorder's settings, onscreen displays and in this manual signifies Wi-Fi Protected Setup.
- The Wi-Fi Protected Setup Identifier Mark is a mark of the Wi-Fi Alliance.
- JavaScript is a trademark or registered trademark of Oracle Corporation, its affiliates or subsidiaries in the United States and other countries.
- HDMI, the HDMI logo and High-Definition Multimedia Interface are trademarks or registered trademarks of HDMI Licensing Administrator, Inc. in the United States and other countries.
- Other names and products not mentioned above may be trademarks or registered trademarks of their respective companies.
- This device incorporates exFAT technology licensed from Microsoft.
- This product is licensed under AT&T patents for the MPEG-4 standard and may be used for encoding MPEG-4 compliant video and/or decoding MPEG-4 compliant video that was encoded only (1) for a personal and noncommercial purpose or (2) by a video provider licensed under the AT&T patents to provide MPEG-4 compliant video. No license is granted or implied for any other use for MPEG-4 standard.
- THIS PRODUCT IS LICENSED UNDER THE AVC PATENT PORTFOLIO LICENSE FOR THE PERSONAL USE OF A CONSUMER OR OTHER USES IN WHICH IT DOES NOT RECEIVE REMUNERATION TO (i) ENCODE VIDEO IN COMPLIANCE WITH THE AVC STANDARD (“AVC VIDEO”) AND/OR (ii) DECODE AVC VIDEO THAT WAS ENCODED BY A CONSUMER ENGAGED IN A PERSONAL ACTIVITY AND/OR WAS OBTAINED FROM A VIDEO PROVIDER LICENSED TO PROVIDE AVC VIDEO. NO LICENSE IS GRANTED OR SHALL BE IMPLIED FOR ANY OTHER USE. ADDITIONAL INFORMATION MAY BE OBTAINED FROM MPEG LA, L.L.C. SEE HTTP://WWW.MPEGLA.COM

Highlights of the XC10

The Canon 4K Camcorder XC10 is a highly functional camcorder that is capable of producing outstanding results when recording video at either 4K (3840x2160) or HD (1920x1080) quality, or taking photos of up to approx. 12 megapixels. The XC10 continues Canon's lineage of high-performance camcorders with robust features designed to help articulate the discerning professional's creative expression.

Exceptional Video and Photos

1.0-type CMOS sensor and DIGIC DV 5 image processor

The combination of the XC10's CMOS sensor and DIGIC DV 5 image processor allows your camcorder to capture videos and photos with low levels of noise, even in dimly-lit shooting situations. Owing to the DIGIC DV 5 image processor, this camcorder boasts remarkable image quality.

Recording in 4K or HD Resolution, XF-AVC or MP4 Format

The camcorder records 4K video to a CFast card using XF-AVC intra-frame[1] compression, and HD video to an SD card using MP4 recorded with the MPEG-4 AVC/H.264 codec or using XF-AVC Long GOP. You can record 4K video at a maximum of 305 Mbps. The impressive video quality you produce with the XC10 will make it your "go-to" main camera for a multitude of projects. You could even shoot B-roll for projects that use Cinema EOS cameras.

[1] This indicates the compression method used for each frame of video. Intra-frame is also suitable for grabbing frames from video and for editing.

Excellent photo quality

You can take photos of up to approx. 12 megapixels (effective pixel count). You will find that the superb photo functionality provide by the XC10 will allow it to be more versatile in your projects, such as taking photos while you shoot video (📖 40) or grabbing a frame from 4K video playback (📖 108). You can even attach an optional EX-series Speedlite for EOS cameras.

Operability and Adaptability

Intuitive design

The camcorder is designed for a single operator to access necessary camera functions both efficiently and intuitively. The lens features separate rings for focus and zoom while the articulated touch-screen LCD panel lets you record in low- and high-angle shooting situations. You can use the shooting mode dial to select a mode, from Special Scene mode to auto to full manual, that best suits how much control you want over shooting functions (📖 51).

Depending on your shooting style, you may even want to attach the supplied viewfinder unit to the camcorder (📖 21) or use the supplied remote controller (📖 36).

Software to help manage recordings

The Canon XF Utility software and Camera Window software are available as free downloads from Canon's Web site. Canon XF Utility allows you to easily save, manage and playback your video clips (📖 115) while Camera Window lets you transfer photos to your computer (📖 118).

Versatile Artistic Expression

Creative recording modes

The camcorder offers a variety of recording modes that you can use to control how your final video or photo will come out. The slow and fast motion recording mode (📖 90) can go from slow motion at x1/4 speed up to fast motion at x1200 speed. Pre-recording mode (📖 91), catches the 5 seconds of video prior to the actual start of recording, which helps ensure that you do not miss the action. You can use interval recording mode (📖 92) to take a series of photos at a set interval.

Creating a professional look

You can add a professional feel to your shots by using looks (📖 65) to affect image-related settings, such as sharpness and color depth. Use the pre-installed looks or customize them to your preference.

Diverse audio options

The camcorder can record sound as 2-channel linear PCM audio (16-bit/48 kHz). The camcorder's audio scenes (📖 80) are a convenient way to let the camcorder take care of audio options depending on the shooting situation. For more control, you can adjust functions such as the audio recording level (📖 81), audio equalizer (📖 83) and audio compressor (📖 86).

Advanced Professional Features and Flexibility

Wi-Fi network functions

When you use the Wi-Fi functions (📖 120), you can remotely record and play back using a connected Wi-Fi device, such as your smartphone or tablet. You can also use the media server function to view photos on your camcorder's SD card.

Time code and user bit output

The camcorder generates a time code and adds it to your recordings. In addition, it can output that time code and user bit from the HDMI OUT terminal (📖 77). This is useful for situations such as referencing or shooting in a multi-camera setup.

Customization

The camcorder features 3 assignable buttons to which you can assign often-used functions (📖 99). The main camera function menu can also be customized so that you can quickly access and adjust functions you find necessary (📖 98).

Other Functions

- Assistance functions
  Peaking and magnification (📖 71) can be helpful when you use manual focus, onscreen markers (📖 76) can be very useful to help you frame your video, and zebra patterns (📖 76) can give you a reference point to avoid overexposures.
- ND filter
  When activated, the built-in ND filter reduces the amount of light by 3 stops, allowing you to better capture your subject in the desired depth of field (📖 136).
- Push AF
  While the camcorder is in manual focus mode, you can use Push AF to switch the camcorder temporarily to autofocus mode (📖 73).
- HD playback from 4K video
  When you play back a 4K clip, you can play back an HD-sized area of your choosing (📖 108).
- Image stabilization (IS)
  In addition to the standard IS function, you can use Dynamic IS, which compensates for camcorder shake while walking and shooting, or Powered IS, which is most effective when you are stationary and zoom in on subjects far away (📖 75).
- Support for geotagging
  You can use the optional GP-E2 GPS Receiver to add GPS information to your recordings (📖 88).

Table of Contents

1. Introduction 9

About this Manual 9
- Conventions Used in this Manual 9

Supplied Accessories 11

Names of Parts 12
- Viewfinder unit 17
- RC-6 Remote Controller 17

2. Preparations 18

Charging the Battery Pack 18

Preparing the Camcorder 21
- Attaching the Lens Hood 21
- Using the Viewfinder Unit 21
- Using the LCD Panel 23
- Adjusting the Grip 24
- Attaching the Shoulder Strap 24
- Using a Tripod 24

Basic Operation of the Camcorder 25
- Switching Between Movies and Photos 25
- Switching Between Recording and Playback 25
- Using the Touch Screen 26

Date, Time and Language Settings 28
- Setting the Date and Time 28
- Changing the Language 29
- Changing the Time Zone 29
- Using the MENU Button and Joystick 29
- Using the FUNC. Menu and Setup Menus 30

Preparing Recording Media 32
- Inserting a CFast Card 32
- Removing a CFast card 33
- Inserting and Removing an SD Card 34
- Initializing the Recording Media 34
- Recovering Data on a Recording Media 35

Using the Remote Controller 36
- Inserting the Battery 36
- Activating the Remote Sensor 36
- Using the Remote Controller to Operate the Camcorder 36

3. Recording 38

Recording Video and Taking Photos 38
- Preparing to Record 38
- Basic Recording 39
- Selecting the Photo Size 41
- Shooting Continuous Photos (Drive Mode) 41
- Remote Operation Using Browser Remote 42
- Onscreen Icons and Displays 43
- Using the Fan 48

Video Configuration: Movie Format (MXF/MP4), Resolution (4K/HD), Frame Rate and Bit Rate 49
- Selecting the Movie Format (MXF or MP4) and Resolution (Recording in 4K or HD) 49
- Selecting the Frame Rate and Bit Rate 49

Shooting Modes 51
- Setting the Shooting Modes 51
- Manual Exposure (M) 51
- Aperture Priority AE (Av) 53
- Shutter Priority AE (Tv) 54
- Program AE (P) 54
- Auto (AUTO) 54
- Special Scene (SCN) 54
- Adjusting Shooting Mode Settings 56

Automatic Gain and ISO Limits 58

Exposure 60
- Exposure Lock 60
- Touch Exposure 60
- AE Shift 61

Light Metering Mode 62

White Balance 63

Using Looks 65
- Selecting a Pre-installed Look 65
- Creating a User-defined Look 66

Zooming 67

Adjusting the Focus 68
- Autofocus (AF) Mode 68
- Manual Focus (MF) 70
- Push AF 73
- Detecting and Focusing On Faces (Face Detection & Tracking) 73

Image Stabilizer 75
Onscreen Markers and Zebra Patterns 76
Displaying Onscreen Markers 76
Displaying Zebra Patterns 76
Setting the Time Code 77
Selecting the Time Code Mode 77
User Bit 79
Setting the User Bit 79
User Bit Output 79
Recording Audio 80
Using Commercially Available Microphones 80
Audio Scenes (Built-in Microphone) 80
Audio Recording Level 81
Wind Screen (Built-in Microphone) 82
Microphone Attenuator (Built-in Microphone) 83
Audio Equalizer (Built-in Microphone) 83
Microphone Directionality (Built-in Microphone) 84
Microphone Attenuator (External Microphone) 84
Low Cut Filter (External Microphone) 85
Switching the Input 85
Audio Limiter 85
Audio Compressor 86
Monitoring the Audio with Headphones 86
Colors Bars/Audio Reference Signal 87
Recording Color Bars 87
Recording an Audio Reference Signal 87
Recording GPS Information (Geotagging) 88
Slow & Fast Motion Mode 90
Pre-recording Mode 91
Interval Recording Mode 92
Self Timer 93
Orientation Detection 94
Using an Optional Speedlite Flash 96
Attaching the Speedlite 96
Configuring an Attached Flash 96

4. Customization 98

Customizing the FUNC. Menu 98
Assignable Buttons 99
Using an Assignable Button 100
Saving and Loading Menu Settings 101
Saving Menu Settings to an SD Card 101
Loading Menu Settings from an SD Card 101

5. Playback 102

Playback 102
Playing Back Recordings 102
Changing the Index Screen 102
Onscreen Icons and Displays during Playback 104
Playback Controls during Clip Playback 106
Playback Controls during Photo Playback 107
Adjusting the Volume 107
Displaying Clip Information 107
Playing an HD-sized Clip from a 4K Clip 108
Capturing Photos from 4K Clips (4K Frame Grab) and HD Clips 108
Magnifying Photos during Playback 109
Deleting Recordings 110
Deleting Clips and Photos from the Index Screen 110
Deleting a Clip During Playback Pause 110
Deleting a Photo during Playback 111

6. External Connections 112

Video Output Configuration 112
Recording Video Signal Configuration and Video Output Configuration 112
Playback Video Configuration and Video Output Configuration 113
Connecting to an External Monitor 114
Connection Diagram 114
Saving Clips to a Computer 115
Saving MXF Clips 115
Saving MP4 Clips 117
Saving Photos to a Computer 118
Installation 118
Connecting the Camcorder to a Computer 118

7. Wi-Fi Functions 120

About the Wi-Fi Functions 120
Wireless Connections Using Wi-Fi 121
Wi-Fi Protected Setup (WPS) 121
Searching for Access Points 122
Manual Setup 124
Viewing and Changing Wi-Fi Settings 125
Browser Remote: Controlling the Camcorder from a Network Device 127
Setting Up Browser Remote 127
Starting Browser Remote 127
Playback via Browser 131
Media Server 132

8. Additional Information 133

Menu Options 133
FUNC. Menu 133
Setup Menus 135
Troubleshooting 142
List of Messages 148
Handling Precautions 152
Maintenance/Others 155
Optional Accessories 156
Specifications 158
Reference Tables 162
Index 164

About this Manual

Thank you for purchasing the Canon XC10. Please read this manual carefully before you use the camcorder and retain it for future reference. Should the camcorder fail to operate correctly, refer to *Troubleshooting* (📖 142).

Conventions Used in this Manual

- IMPORTANT: Precautions related to the camcorder's operation.
- NOTES: Additional topics that complement the basic operating procedures.
- 📖: Reference page number.
- The following terms are used in this manual.
  "Screen" refers to the LCD screen.
  "SD card" refers to an SD, SDHC or SDXC memory card.
  "Recording media" refers to CFast cards and SD cards.
- Photographs in the manual are simulated pictures taken with a still camera. Some screenshots have been altered to make them easier to read.
- This camcorder uses the same button to record video clips and take photos. In this manual, when you are recording video clips, this button is referred to as the START/STOP button; when you are shooting photos, it is referred to as the PHOTO button.

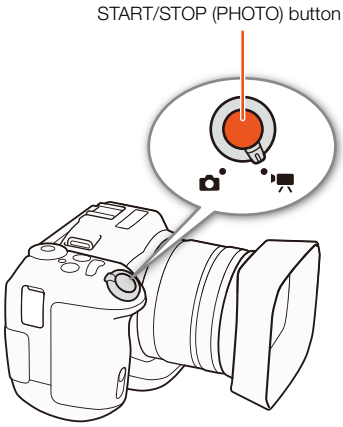

The arrow ❯ is used to abbreviate menu selections. For a detailed explanation on how to use the menus, refer to *Using the MENU Button and Joystick* (📖 29). For a concise summary of all available menu options and settings, refer to the appendix *Menu Options* (📖 133).

Operating modes
A full icon (like 🎥) indicates the function can be used in the operating mode shown; an empty icon (like 📷) means the function cannot be used. For details, refer to the following.
Basic Operation of the Camcorder (📖 25)
Selecting the Movie Format (MXF/MP4) and Resolution (Recording in 4K or HD) (📖 49)

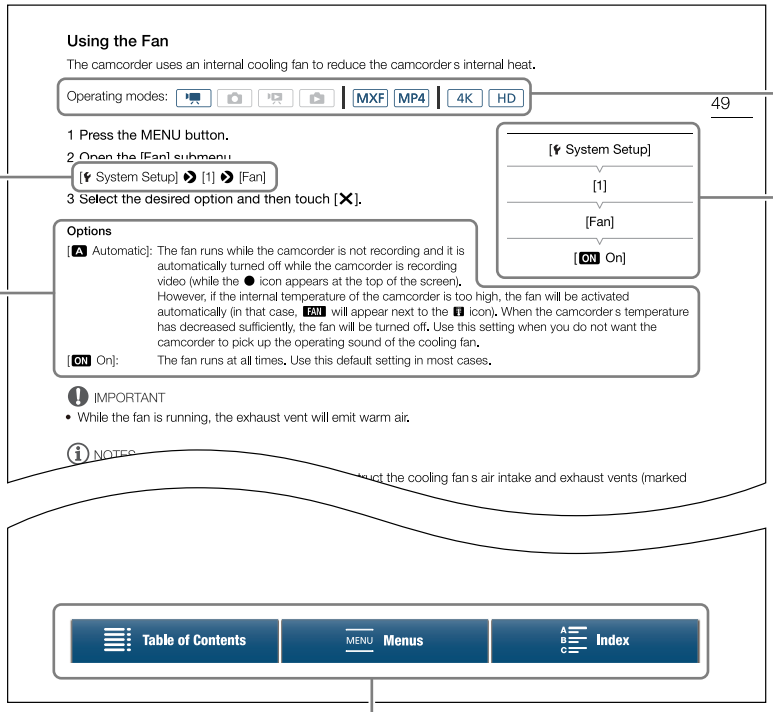

When a procedure requires selecting an option, the available options are listed within or after the procedure. Brackets [ ] are used to refer to menu options as they are displayed on screen.

When a function requires the use of the menu, the quick reference shows the submenus and, when applicable, the default setting for the menu item. The example illustration indicates that you can find the function by selecting the [System Setup] menu and then the [Fan] menu item.

The navigation bar at the bottom of the page offers buttons to let you jump quickly to the information you want to find.

Takes you to the table of contents.

Takes you to the summary of menu options and settings.

Takes you to the alphabetical index.

Supplied Accessories

The following accessories are supplied with the camcorder.

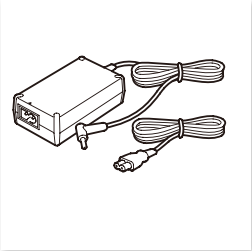

CA-570 Compact Power Adapter
(incl. power cord)

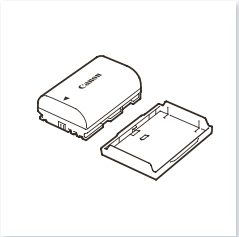

LP-E6N Battery Pack
(incl. protective cover)

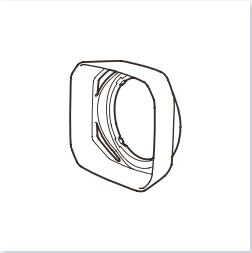

Lens Hood

Viewfinder Unit
(incl. viewfinder unit cover)

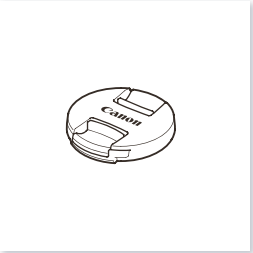

Lens Cap

RC-6 Remote Controller
(incl. CR2032 lithium button battery)

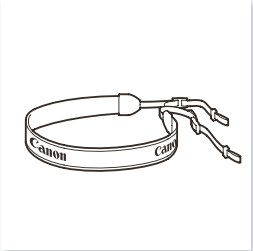

Shoulder Strap

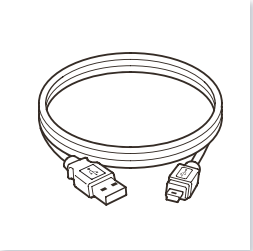

IFC-300PCU/S USB Cable

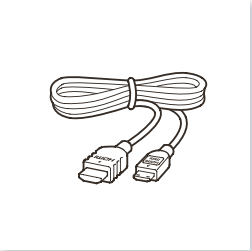

HTC-100/S High Speed HDMI Cable

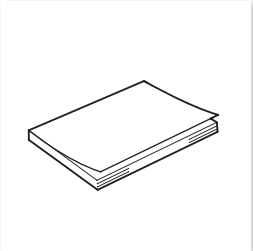

Quick Guide

Names of Parts

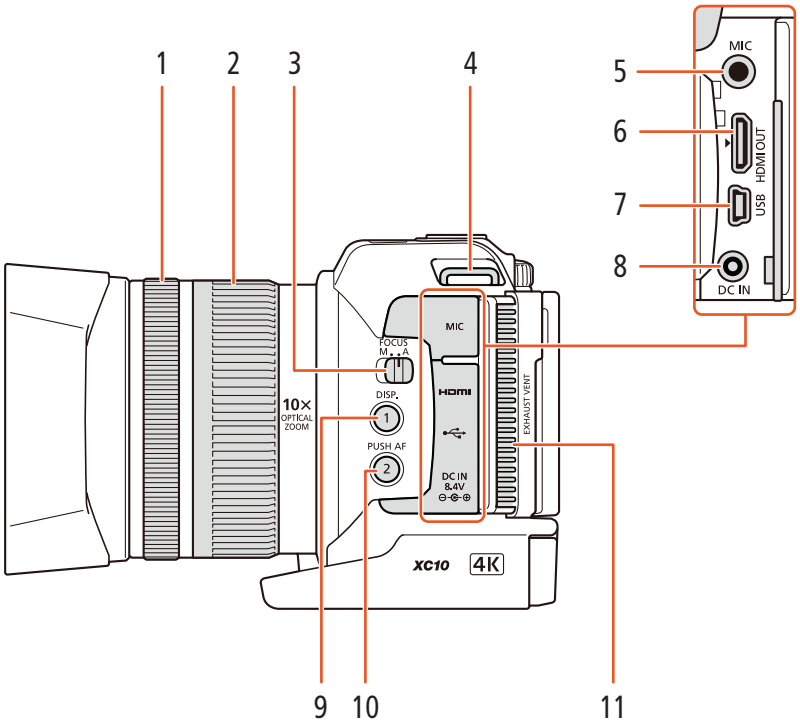

1 Focus ring (📖 68)
2 Zoom ring (📖 67)
3 FOCUS (focus mode) switch (📖 68)
4 Shoulder strap mount (📖 24)
5 MIC (microphone) terminal (📖 80)
6 HDMI OUT terminal (📖 114)
7 USB terminal (📖 88, 118)
8 DC IN terminal (📖 18)
9 DISP. (display) button (📖 47)/ Assignable button 1 (📖 99)
10 PUSH AF (momentary autofocus) button (📖 73)/ Assignable button 2 (📖 99)
11 Exhaust ventilation outlet (📖 48)

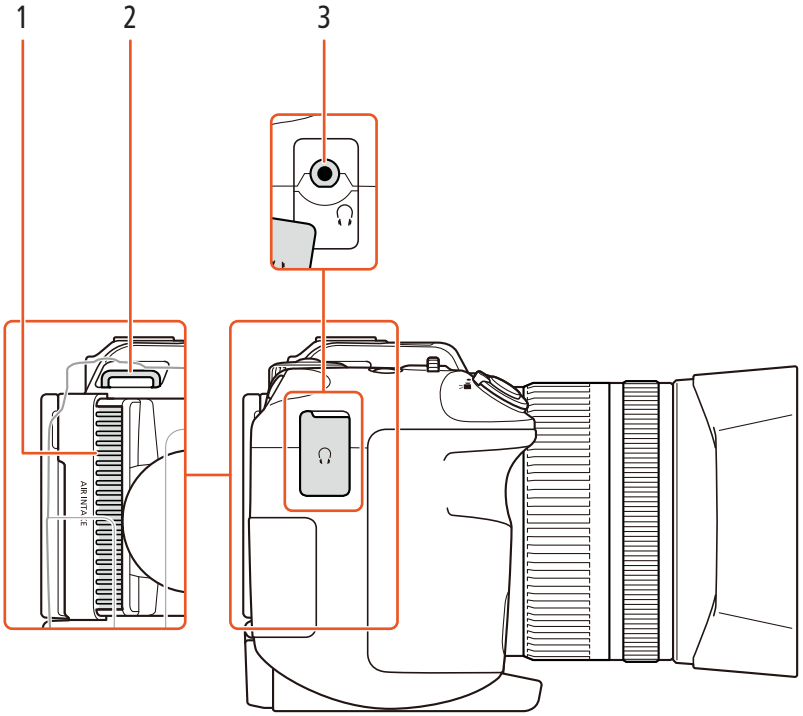

1 Air intake vent (📖 48)
2 Shoulder strap mount (📖 24)
3 🎧 (headphone) terminal (📖 86)

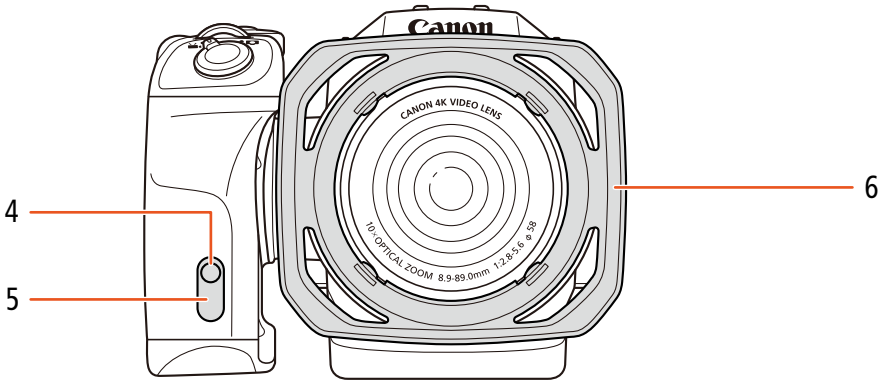

4 Tally lamp (📖 39)
5 Remote sensor (📖 36)
6 Lens hood (📖 21)

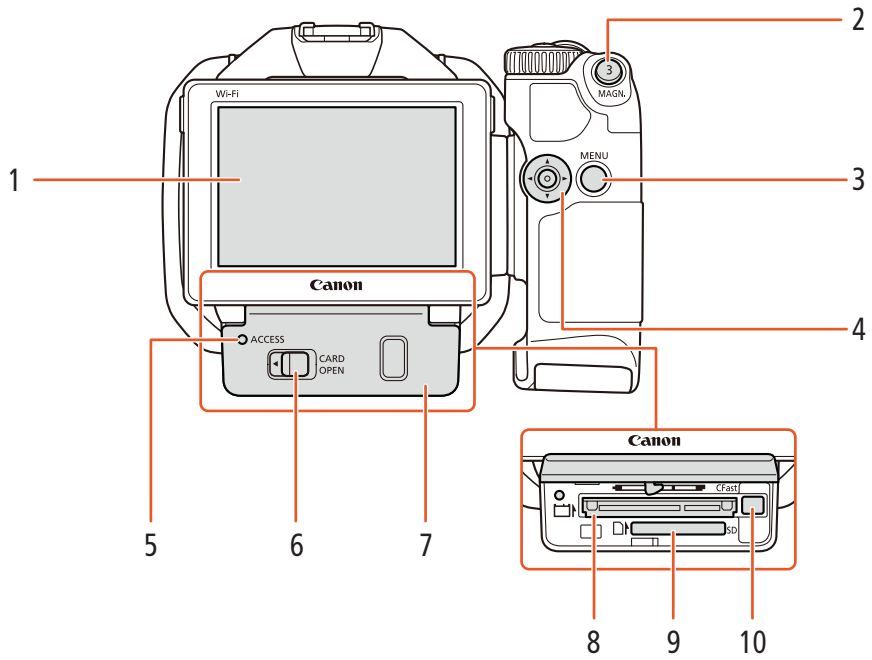

1 LCD touch screen (📖 23)
2 MAGN. (magnification) button (📖 71)/ Assignable button 3 (📖 99)
3 MENU button (📖 29)
4 Joystick (📖 29)
5 ACCESS indicator (📖 32)
6 CARD OPEN (open recording media slot cover) lever (📖 32)
7 Recording media slot cover
8 CFast card slot (📖 32)
9 SD card slot (📖 32)
10 CFast card release button (📖 32)

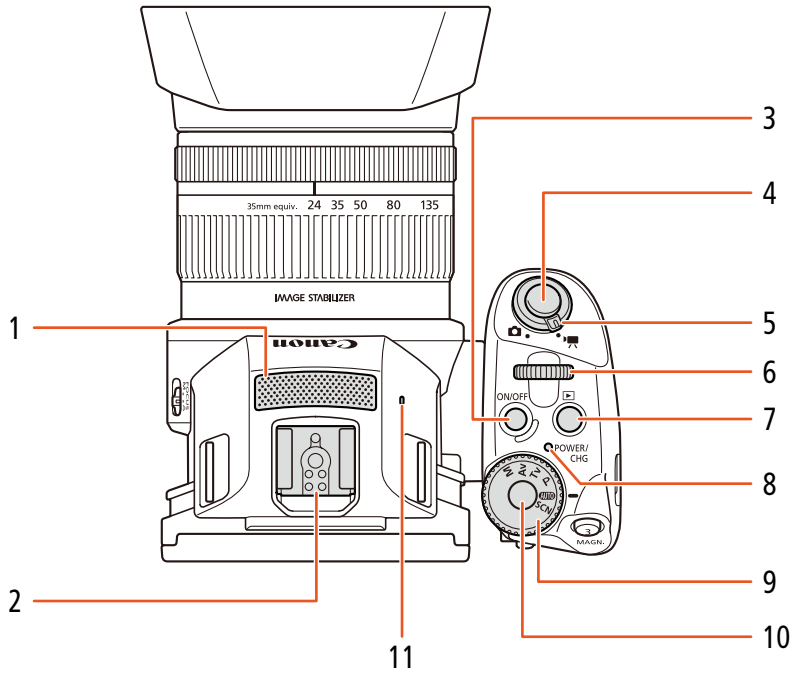

1 Built-in microphone (📖 80)
2 Accessory shoe (📖 88, 96): For attaching the optional GP-E2 GPS Receiver or optional EX-series Speedlite for EOS cameras.
3 ON/OFF button (📖 28)
4 START/STOP button (📖 38)/PHOTO button (📖 38): When you are recording video clips, this button is referred to in this manual as the START/STOP button; when you are shooting photos, it is referred to as the PHOTO button.
5 Movie/photo switch (📖 25)
6 Control dial (📖 51)
7 ▶ (playback) button (📖 102)
8 POWER/CHG (power/battery charging) indicator (📖 18)
9 Shooting mode dial (📖 51)
10 Shooting mode dial button (📖 51)
11 Built-in speaker (📖 107)

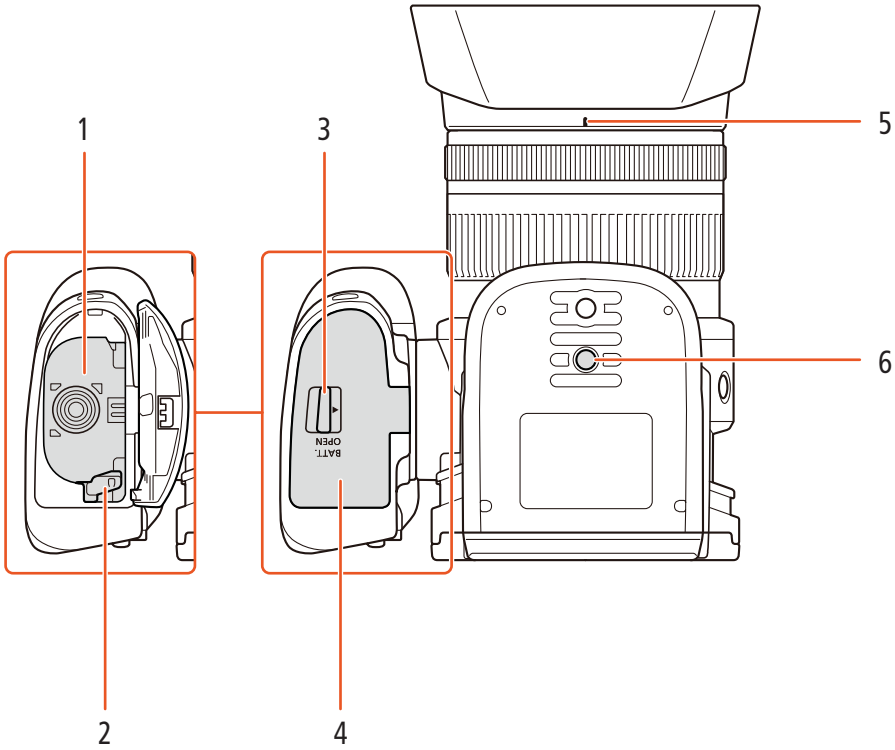

1 Battery compartment
2 Battery release latch (📖 18)
3 BATT. OPEN (open battery compartment) switch (📖 18)
4 Battery compartment cover (📖 18)
5 Lens hood mount index (📖 21)
6 Tripod socket (📖 24)

Viewfinder unit

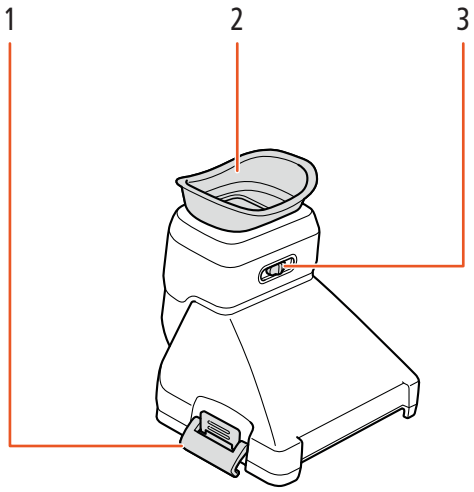

1 Viewfinder unit latch (📖 21)
2 Eye cup
3 Dioptric adjustment lever (📖 22)

RC-6 Remote Controller

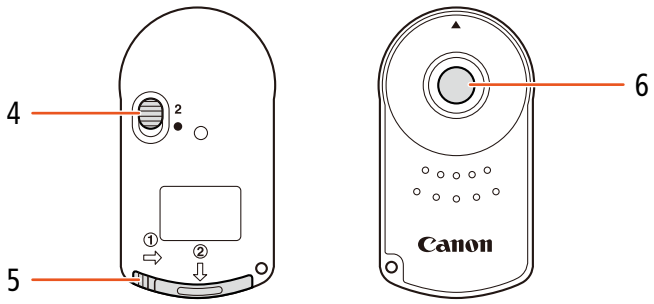

4 Delay switch (📖 36)
5 Battery compartment cover
6 Transmit button

Charging the Battery Pack

The camcorder can be powered with a battery pack or directly using the compact power adapter. The first time you use the camcorder, charge the battery pack.
For approximate charging times and recording/playback times with a fully charged battery pack, refer to *Recording and Playback Times* (📖 163).

1 Connect the power cord to the compact power adapter.
2 Plug the power cord into a power outlet.
3 Connect the compact power adapter to the camcorder's DC IN terminal.

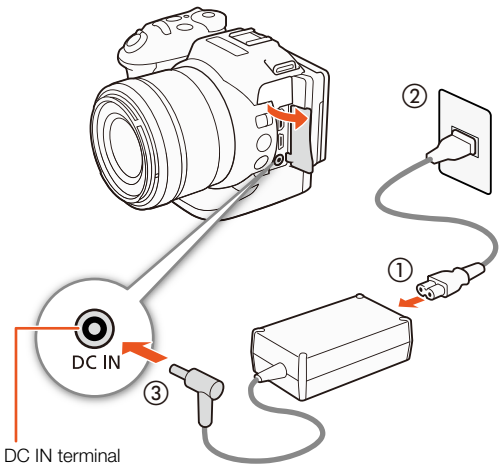

4 Slide the BATT. OPEN switch in the direction of the arrow and open the battery compartment cover.
5 Insert the battery pack all the way into the compartment as shown in the illustration.
- Push it all the way in until the battery release latch secures it in place.

6 Close the battery compartment cover.
- Push the cover until you hear a click. Do not force the cover closed if the battery pack is not correctly inserted.

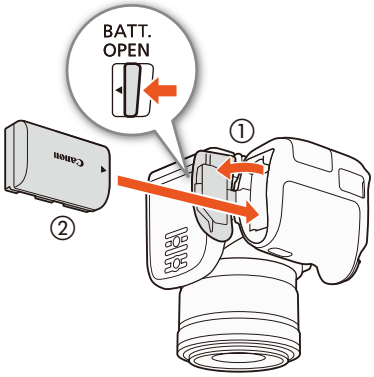

7 Charging will start when the camcorder is turned off.
- If the camcorder was on, the green POWER/CHG indicator will go out when you turn off the camcorder. After a moment, the POWER/CHG indicator will turn on in red (battery pack charging). The red POWER/CHG indicator will go out when the battery pack is fully charged.
- If the indicator flashes, refer to *Troubleshooting* (142).

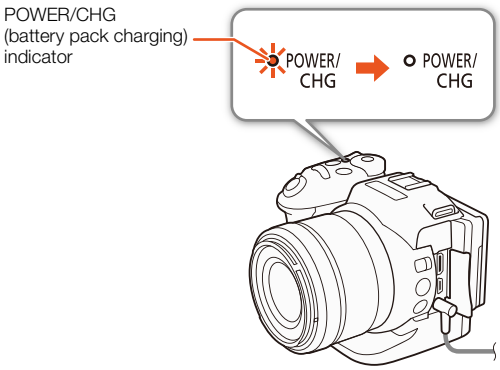

8 Disconnect the compact power adapter in the order shown in the illustration.

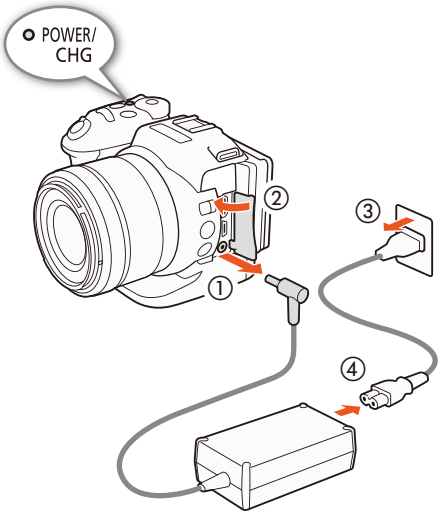

To remove the battery pack

Open the battery compartment cover and slide the battery release latch in the direction of the arrow so the battery pack springs out. Remove the battery pack and close the cover.

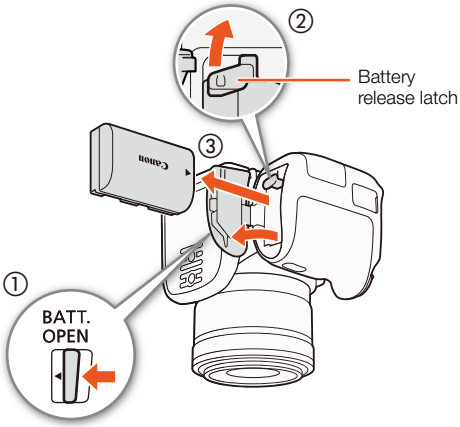

IMPORTANT

- Turn off the camcorder before connecting or disconnecting the compact power adapter. After you turn off the camcorder, important data is updated on the recording media. Be sure to wait until the green POWER/CHG indicator goes out.
- When using the compact power adapter, do not fix it permanently to one place as this may cause a malfunction.
- Do not connect to the camcorder's DC IN terminal or to the compact power adapter any electrical equipment that is not expressly recommended for use with this camcorder.
- To prevent equipment breakdowns and excessive heating, do not connect the supplied compact power adapter to voltage converters for overseas travels or special power sources such as those on aircraft and ships, DC-AC inverters, etc.

NOTES

- You cannot charge the optional LP-E6 Battery Pack with the camcorder. Check the bottom label of the battery pack and make sure it is an LP-E6N Battery Pack.

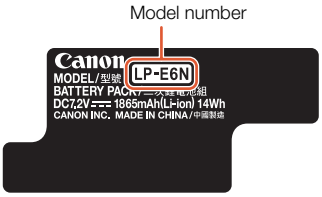

- We recommend charging the battery pack in temperatures between 10 °C and 30 °C. If either the ambient temperature or the battery pack's temperature is outside the range of approx. 0 °C to 40 °C, charging may take longer than usual or charging may not start.
- The battery pack will be charged only when the camcorder is off.
- If the power supply was disconnected while charging a battery pack, make sure the POWER/CHG indicator has gone out before restoring the power supply.
- If remaining battery time is an issue, you can power the camcorder using the compact power adapter so the battery pack will not be consumed.
- Charged battery packs continue to discharge naturally. Therefore, charge them on the day of use, or the day before, to ensure a full charge.
- We recommend that you prepare battery packs to last 2 to 3 times longer than you think you might need.

Preparing the Camcorder

This section outlines the basic preparations of the camcorder, such as attaching the viewfinder unit and adjusting the screen and grip.

Attaching the Lens Hood

Attach the lens hood to protect the lens and reduce the amount of stray light that may hit the lens.

Place the lens hood on the front of the lens so that the hood's lens mount index covers the index on the lens (①) and turn it 90 degrees clockwise until it clicks (②).

- Be careful not to deform the lens hood.
- Make sure that the lens hood is aligned with the thread.

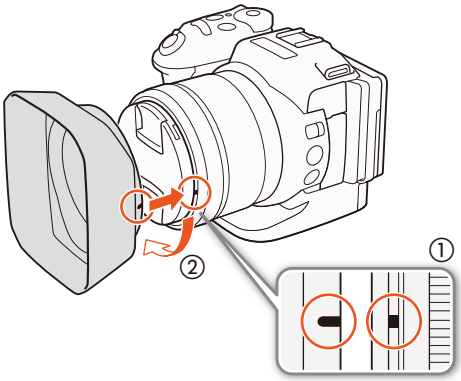

Using the Viewfinder Unit

Attaching the Viewfinder Unit

1 Open the viewfinder unit latch and remove the viewfinder unit cover.

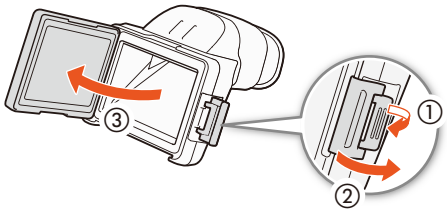

2 Turn the LCD panel 90 degrees upward.

3 Hook the protrusion on the right side of the viewfinder unit into the groove under the right side of the LCD panel. Then, lower the viewfinder unit.

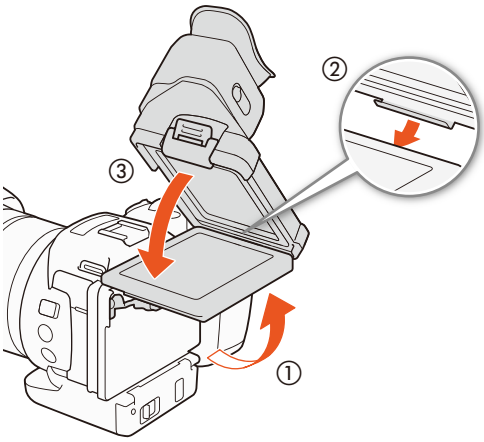

4 Hook the viewfinder unit latch under the left side of the LCD panel and then fasten the latch. Then, return the LCD panel to its original position.

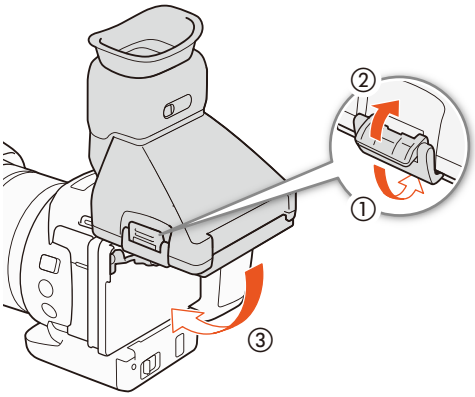

Adjusting the Viewfinder Unit

1 Press the ON/OFF button to turn on the camcorder.
- The POWER/CHG indicator will illuminate.
- If necessary, perform the initial setup (📖 28).

2 Adjust the dioptric adjustment lever until the viewfinder unit's image is sharp.

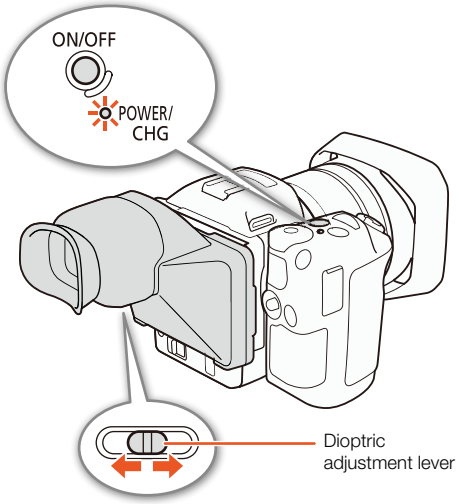

Removing the Viewfinder Unit

1 Turn the LCD panel 90 degrees upward.

2 Open the viewfinder unit latch and remove the viewfinder unit from the camcorder.
- Make sure to open the latch all the way before removing the unit.

3 Attach the viewfinder unit cover, hook the viewfinder unit latch to the left side of the cover and then fasten the latch.

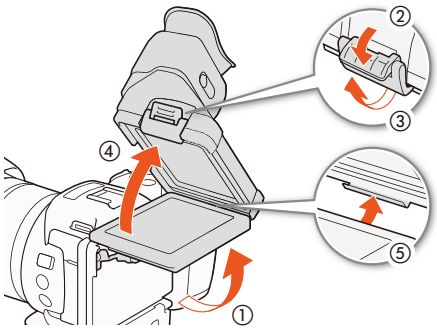

4 Attach the viewfinder unit cover.

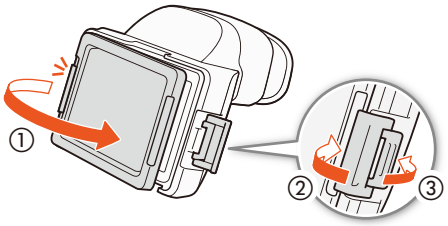

NOTES

- When you are not using the viewfinder unit, make sure to attach the viewfinder unit cover to the unit.

Using the LCD Panel

Pull out the LCD panel and adjust it to a comfortable viewing angle.

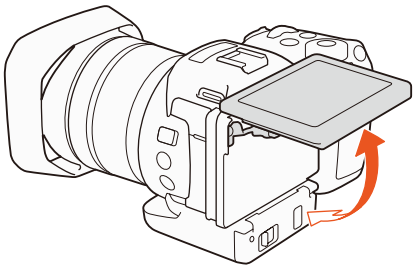

- You can adjust the angle also for high- and low-angle shooting.

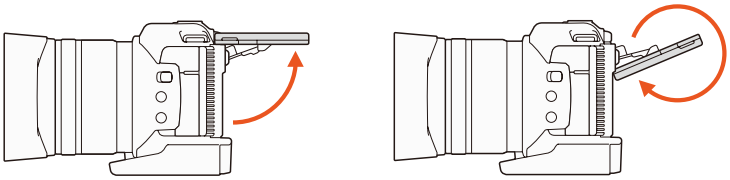

NOTES

- **About the LCD screen:** The screen is produced using extremely high-precision manufacturing techniques, with more than 99.99% of the pixels operating to specification. Less than 0.01% of the pixels may occasionally misfire or appear as black, red, blue or green dots. This has no effect on the recorded image and does not constitute a malfunction.
- If the screen appears dim, you can adjust the brightness using the [System Setup] ➤ [1] ➤ [LCD Brightness] and [LCD Backlight] settings.

Adjusting the Grip

The grip can be rotated 90 degrees toward or away from the lens to give you a convenient grip angle.

While firmly holding the camcorder, rotate the grip to the desired position.

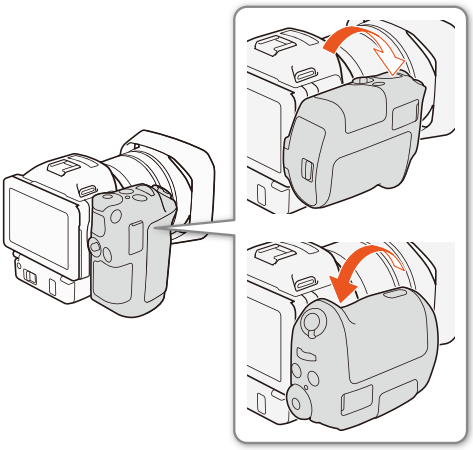

Attaching the Shoulder Strap

Pass the ends through the strap mounts and adjust the length of the shoulder strap.

IMPORTANT

- Be careful not to drop the camcorder when attaching or adjusting the shoulder strap.

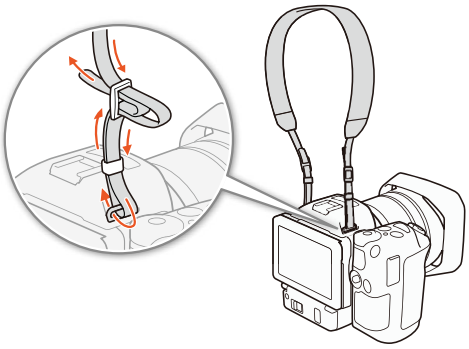

Using a Tripod

You can mount the camcorder on a tripod with a mounting screw of 6.5 mm or smaller. Using tripods with longer mounting screws may cause damage to the camcorder.

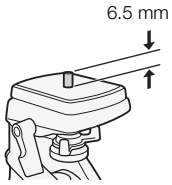

Basic Operation of the Camcorder

Depending on how you plan to shoot, you may need to switch between shooting video clips and shooting photos. Before you shoot, you can also select a shooting mode, which can give you the freedom of adjusting the camcorder's camera-related settings or allow you to entrust the settings to the camcorder to varying degrees, depending on the mode. After you finish recording, you can check your recordings by switching the camcorder to playback mode.

Switching Between Movies and Photos

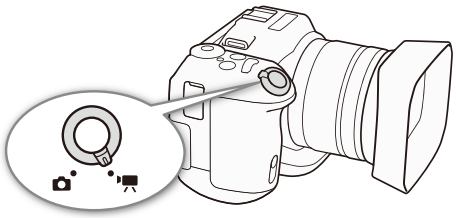

Operating modes:

MXF MP4 | 4K HD

To shoot video clips, set the movie/photo switch to 🎥; to shoot photos, set it to 📷.

Setting the Shooting Mode

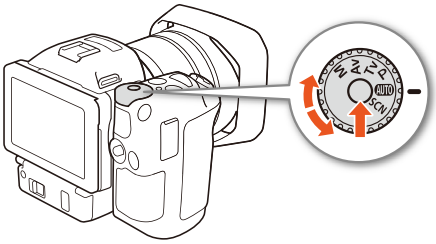

You can select a shooting mode to match your shooting style.

Operating modes:

MXF MP4 | 4K HD

While pressing down the shooting mode dial button, turn the shooting mode dial to the desired mode.

- For details on the various shooting modes, refer to *Shooting Modes* (📖 51).

Switching Between Recording and Playback

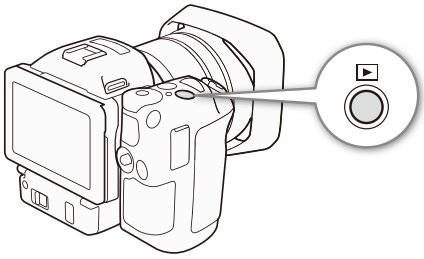

With a single press of a button, the camcorder can easily switch between recording mode and playback mode. For details on playing back your recordings, refer to *Playback* (📖 102).

Operating modes:

MXF MP4 | 4K HD

Hold the ▶ button pressed down.

Operating Mode Icons Used in This Manual
This instruction manual uses icons to indicate the recording and playback modes for video clips and photos.

Icon	Description
	Video clip shooting mode.
	Photo shooting mode.
	Video clip playback mode
	Photo playback mode.

Using the Touch Screen

The buttons and menu items that appear on the touch screen change dynamically depending on the operating mode and the task you are performing. With the intuitive touch screen interface you have all the controls at your fingertips.

Touch

Press on an element displayed on the touch screen.
Used to start playing back a scene in an index screen, to select a setting from the menus, etc.

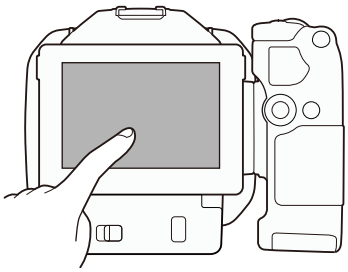

Drag

Swipe your finger up and down or left and right across the screen. Used to scroll menus, to browse through index screen pages or to adjust slider controls like the volume.
On some screens, you can achieve the same effect by touching the triangle control buttons.

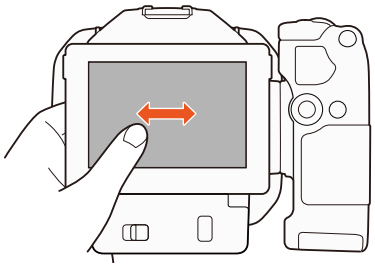

Pinch

Pinch In

Place two fingers on the screen and bring them together.
Used when playing back clips and photos. Pinch your fingers in to return to the index screen. Also used during photo playback to zoom out from a photo that has been zoomed in.

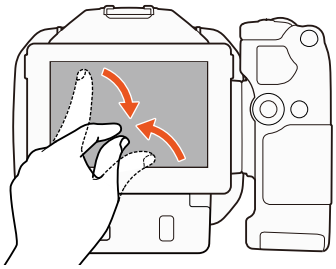

Pinch Out

Place two fingers on the screen and move them apart.
Used on an index screen during playback. Pinch your fingers out to start playing back the clip. Also used during photo playback to zoom in on the photo.

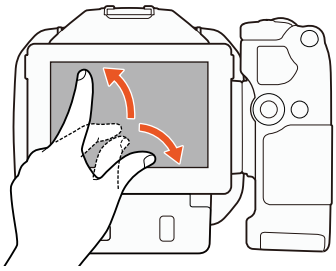

IMPORTANT

- The camcorder features a capacitive touch screen. In the following cases, you may not be able to perform touch operations correctly.
  - Using your fingernails or hard-tipped objects, such as ballpoint pens.
  - Operating the touch screen with wet or gloved hands.
  - Applying excessive force or forcefully scratching the touch screen.
  - Attaching commercially available screen protectors or adhesive film onto the touch screen's surface.

Date, Time and Language Settings

Setting the Date and Time

You will need to set the date and time of the camcorder before you can start using it. When the camcorder's clock is not set, the [Date/Time] screen will appear automatically with the day selected.

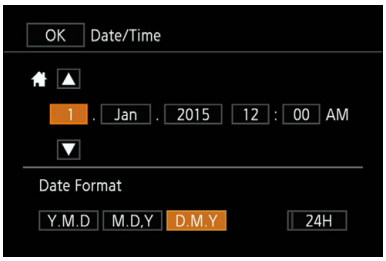

Operating modes:

MXF MP4 | 4K HD

1 Press the ON/OFF button to turn on the camcorder.
- The POWER/CHG indicator will illuminate and the [Date/Time] screen will appear.

2 Touch a field you want to change (year, month, day, hours or minutes).
- You can also push the joystick (◀▶) to move between the fields and then press the joystick to make your selection.

3 Touch [▲] or [▼] to change the field as necessary.
- You can also push the joystick (▲▼) to change the field.

4 Set the correct date and time by changing all the fields in the same way.

5 Touch [Y.M.D], [M.D,Y] or [D.M.Y] to select the date format you prefer.
- You can also push the joystick (◀▶) to move between the fields and then press the joystick to make your selection.
- In some screens, the date will be displayed in short form (numbers instead of month names or only the day and month), but it will still follow the order you selected.

6 Touch [24H] to use 24-hour clock or leave it unselected to use 12-hour clock (AM/PM).
- You can also push the joystick (◀▶) to move between the fields and then press the joystick to make your selection.

7 Touch [OK] to start the clock and close the setup screen.
- You can also push the joystick (◀▶) to move between the fields and then press the joystick to make your selection.

NOTES
- You can adjust the date and time later on with the [System Setup] ➤ [1] ➤ [Date/Time] setting.
- When you do not use the camcorder for about 3 months, the built-in rechargeable lithium battery may discharge completely and the date and time setting may be lost. In such case, recharge the built-in lithium battery (📖 154) and set the time zone, date and time again.
- Using the optional GP-E2 GPS Receiver, you can have the camcorder adjust settings automatically according to the UTC date/time information received from the GPS signal (📖 88).

Changing the Language

[System Setup] > [1] > [Language] > [English]

The default language of the camcorder is English. You can set it to one of 27 languages.

Operating modes:

MXF MP4 | 4K HD

1 Press the MENU button.

2 Open the [Language] screen.
[System Setup] > [1] > [Language]

3 Touch the desired language and then touch [OK].

4 Touch [✕] to close the menu.

NOTES

- Some buttons, such as [FUNC.] and [MENU], will appear in English regardless of the language selected.

Changing the Time Zone

[System Setup] > [1] > [Time Zone/DST] > [Paris]

Change the time zone to match your location. The default setting is Paris. In addition, the camcorder is able to retain the date and time of an additional location. This is convenient when you travel so that you can set the camcorder to match the time of your home location or that of your travel destination.

Operating modes:

MXF MP4 | 4K HD

1 Press the MENU button.

2 Open the [Time Zone/DST] screen.
[System Setup] > [1] > [Time Zone/DST]

3 Touch [⌂] to set the home time zone, or [✈] to set the time zone of your destination when you are traveling.

4 Touch [◀] or [▶] to set the desired time zone. If necessary, touch [☀] to adjust for daylight saving time.

5 Touch [✕] to close the menu.

Using the MENU Button and Joystick

You can navigate some of the camcorder's menus and screens using the MENU button and joystick instead of using the touch panel. This is convenient, for example, when the viewfinder unit is attached to the camcorder and you cannot touch the screen.

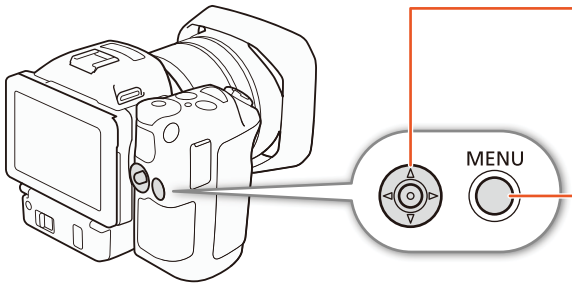

Joystick
When making a menu selection, push the joystick (▲▼/◀▶) to move the orange selection frame in the menu. Then, press the joystick itself to select the menu item indicated by the orange selection frame.

MENU button
Press the button to open the setup menus and then press again to close the menu after adjusting desired settings.

Using the FUNC. Menu and Setup Menus

The camcorder's functions and settings can be adjusted using the FUNC. menu and setup menus. For details about the available menu options and settings, refer to the appendix *Menu Options* (📖 133). In this manual, navigating the menus is explained using mainly the touch panel controls but they can also be navigated using the joystick and other buttons. The procedure below explains how to use both methods. If necessary, refer back to this section for details on using the joystick.

FUNC. Menu

The FUNC. menu contains camera-related functions, such as shutter speed and aperture, used while shooting. The icons of each function's current setting appears on both sides of the menu. The left side contains functions used prior to shooting while the right side contains functions that can be used while shooting. You can even change what functions appear on the right side of the FUNC. menu (📖 98).
Although you can access the various functions using the joystick, some functions will still require touch operations.

Operating modes: MXF MP4 | 4K HD

To use the touch panel controls

1 Touch [FUNC.].
- The FUNC. menu appears. You can drag your finger up/down to see more functions.

2 Touch the icon of the desired function.
- Menu items not available appear grayed out.

3 Adjust the function and then touch [✕].
- Check the function's description for details.

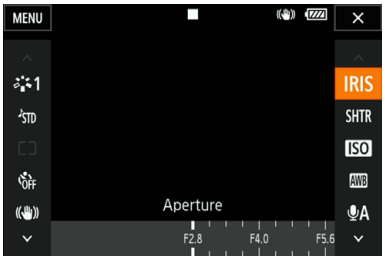

To use the joystick

1 Push the joystick (▲▼/◀▶) to select [FUNC.] and then press the joystick.
- The FUNC. menu appears.

2 Push the joystick (▲▼/◀▶) to select the icon of the desired function and then press the joystick.
- Menu items not available appear grayed out.

3 Adjust the function.

4 Push the joystick (▲▼/◀▶) to select [✕] and then press the joystick.
- Check the function's description for details.

NOTES

- An adjustment dial will appear when adjusting some functions. To use touch panel controls, drag your finger left/right to move the adjustment dial to the desired setting. To use the joystick, first press the joystick itself so that the position of the current setting is highlighted in orange and then push left/right to adjust the setting.

Setup Menus

Operating modes: [ ] [ ] [ ] [ ] | MXF MP4 | 4K HD

To use touch panel controls

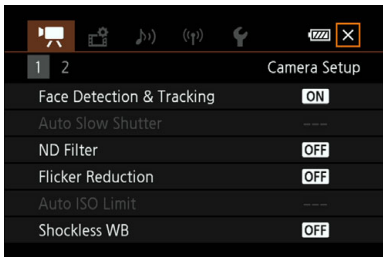

1 [ ] and [ ] modes only: Touch [FUNC.].
2 Touch [MENU].
- Alternatively, you can press the MENU button to open the setup menus directly.
- The setup menus appear. Settings are divided into groups, which can be accessed through the tabs at the top of the screen.

3 Touch the tab of the desired menu.
- Depending on the operating mode, some tabs may be divided into multiple “pages”. Touch the numbers under the tab icons or drag your finger left/right to switch to other pages in the currently selected tab.

4 Touch the desired setting.
- Menu items not available appear grayed out.

5 Touch the desired option and then touch [✕].
- You can touch [✕] to close the menu at any time.
- You can touch [⮌] to return to the previous screen. If you changed a setting, it will be applied.

To use the joystick

1 [ ] and [ ] modes only: Push the joystick (▲▼/◀▶) to select [FUNC.] and then press the joystick.
2 Push the joystick (▲▼/◀▶) to select [MENU] and then press the joystick.
- Alternatively, you can press the MENU button to open the setup menus directly.
- The setup menus appear. Settings are divided into groups, which can be accessed through the tabs at the top of the screen.

3 Push the joystick (◀▶) to select the desired tab and page number.
- Depending on the operating mode, some tabs may be divided into multiple “pages”. Touch the numbers under the tab icons or drag your finger left/right to switch to other pages in the currently selected tab.

4 Push the joystick (▲▼) to move the selection bar to the desired setting and then press the joystick.
- Menu items not available appear grayed out.

5 Push the joystick (▲▼/◀▶) to select the desired option and then press the joystick.
6 Push the joystick (▲▼/◀▶) to select [✕] and then press the joystick.
- You can press the MENU button to close the menu at any time.
- You can select [⮌] to return to the previous screen. If you changed a setting, it will be applied.

NOTES

- For brevity’s sake, references in the text to settings in the setup menus will include only the tab of the desired menu and the setting name. For example, “You can adjust the date and time later on with the [System Setup] ➤ [1] ➤ [Date/Time] setting.”
- Depending on the operating mode, you may need to switch pages under the tab to access the function.

Preparing Recording Media

The camcorder records 4K clips to CFast cards, and HD clips and photos to SD, SDHC and SDXC memory cards. Initialize recording media (34) when you use them with this camcorder for the first time. In the case of SD cards, initialize using the [Complete Initialization] option.

Compatible Recording Media

For the latest information about recording media tested for use with this camcorder, visit your local Canon Web site.

CFast cards

CFast 2.0-compliant cards.

SD cards

As of June 2016, the recording function has been tested using memory cards made by Panasonic, Toshiba and SanDisk. For details about SD cards tested for use with this camcorder, visit your local Canon Web site.

Memory card type:	SD card, SDHC card, SDXC card
SD Speed Class*:	CLASS 6, CLASS 10

* SD Speed Class is a standard that indicates the minimum guaranteed data transfer of SD cards. To record HD clips with a bit rate of 50 Mbps or to record clips using slow & fast recording mode, we recommend using SD cards rated CLASS 10.

IMPORTANT

- After repeatedly recording, deleting and editing scenes (fragmented memory), it will take longer to write data on recording media and recording may stop. Save your recordings and initialize the recording media with the camcorder. In the case of SD cards, initialize using the [Complete Initialization] option.
- Turn off the camcorder before inserting or removing recording media. Inserting or removing the recording media with the camcorder on may result in permanent data loss.
- **About CFast and SDXC cards:** You can use CFast cards and SDXC cards with this camcorder but such recording media are initialized using the exFAT file system.
  - When using exFAT-formatted recording media with other devices (digital recorders, card readers, etc.), make sure that the external device is compatible with exFAT. For more information on compatibility, contact the computer, operating system or memory card manufacturer.
  - If you use exFAT-formatted recording media with a computer OS that is not exFAT-compatible, you may be prompted to format the memory card. In such case, **cancel the operation to prevent data loss**.

NOTES

- Proper operation cannot be guaranteed for all recording media.

Inserting a CFast Card

1 Wait until the ACCESS indicator is off.

2 Slide the CARD OPEN switch in the direction of the arrow and open the recording media slot cover.

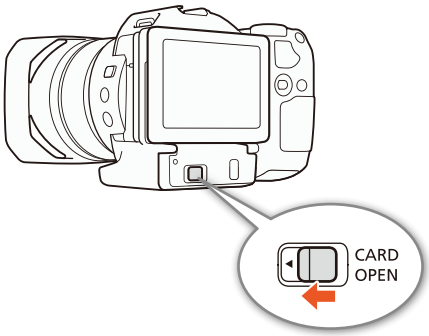

3 Insert the CFast card straight, with the label facing up, all the way into the slot.
- Make sure the you insert the CFast card into the slot so that the connectors in the card match the orientation shown on the illustration to the left of the CFast card slot.

4 Close the recording media slot cover.
- Do not force the cover closed if the CFast card is not correctly inserted.

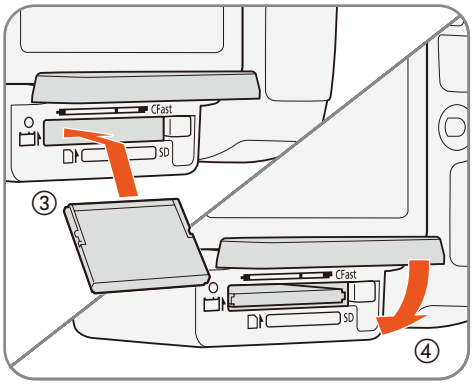

ACCESS indicator	Recording media status
On or flashing	Accessing the recording media.
Off	A recording media is not inserted or it is not being accessed.

IMPORTANT
- CFast cards have front and back sides that are not interchangeable. Inserting a CFast card facing the wrong direction can cause a malfunction of the camcorder. Be sure to insert the CFast card as described in the procedure above.

Removing a CFast card

1 Wait until the ACCESS indicator is off.

2 Slide the CARD OPEN switch in the direction of the arrow and open the recording media slot cover.

3 Push in the CFast card release button to release the CFast card.

4 Pull the CFast card all the way out and close the recording media slot cover.

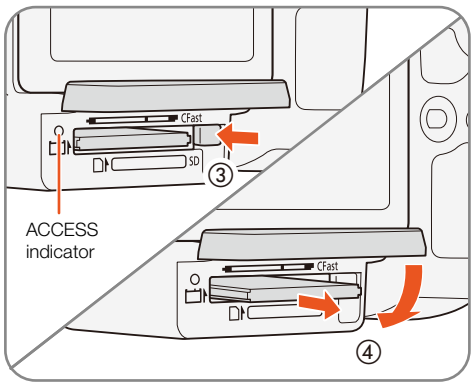

IMPORTANT
- Observe the following precautions while the ACCESS indicator is on or flashing in red. Failure to do so may result in permanent data loss.
  - Do not disconnect the power source or turn off the camcorder.
  - Do not open the recording media slot cover.

Inserting and Removing an SD Card

1 Make sure the ACCESS indicator is off.

2 Slide the CARD OPEN switch in the direction of the arrow and open the recording media slot cover.

3 Insert the SD card, with the label facing up, all the way into the SD card slot until it clicks.

- To remove the SD card, push the SD card once to release it. When the SD card springs out, pull it all the way out.

4 Close the recording media slot cover.

- Do not force the cover closed if the SD card is not correctly inserted.

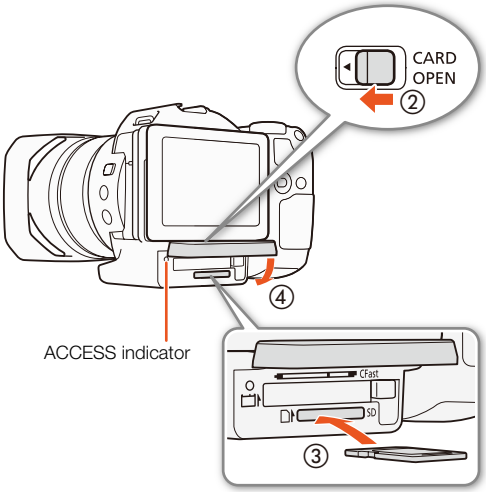

ACCESS indicator	Recording media status
On or flashing	Accessing the recording media.
Off	A recording media is not inserted or it is not being accessed.

IMPORTANT

- Observe the following precautions while the ACCESS indicator is on or flashing in red. Failure to do so may result in permanent data loss.
  - Do not disconnect the power source or turn off the camcorder.
  - Do not open the recording media slot cover.
- SD cards have front and back sides that are not interchangeable. Inserting an SD card facing the wrong direction can cause a malfunction of the camcorder. Be sure to insert the SD card as described in the procedure above.

NOTES

- SD cards have a physical switch to prevent writing on the card so as to avoid the accidental erasure of the card's content. To write-protect the SD card, set the switch to the LOCK position.

Initializing the Recording Media

The first time you use any recording media with this camcorder, initialize it first. You can also initialize a recording media to permanently delete all the data it contains.

When initializing an SD card, you can select quick initialization, which clears the file allocation table but does not physically erase the stored data, or complete initialization, which deletes all data completely.

Operating modes: MXF MP4 | 4K HD

1 Press the MENU button.

2 Open the [Initialize CFast/SD] submenu.

[Recording Setup] ➤ [2] (in mode) or [1] (in mode) ➤ [Initialize CFast/SD]

3 Touch [CFast Memory Card] or [SD Memory Card] and then touch [Initialize].

- If you are initializing a CFast card, skip to step 5.

[Recording Setup]

[2] (in mode) or [1] (in mode)

[Initialize CFast/SD]

4 Touch [Complete Initialization] to delete all data completely.

5 Touch [Yes].

- If you are using the [Complete Initialization] option, you can touch [Cancel] to cancel the operation while it is in progress. You can use the SD card but all data will be erased.

6 When the confirmation screen appears, touch [OK].

- The selected recording media is initialized and all the data it contains is erased.

IMPORTANT

- Initializing a recording media will permanently erase all data. Lost data cannot be recovered. Make sure you save important recordings in advance.
- Depending on the SD card, the complete initialization may take up to a few minutes.

Recovering Data on a Recording Media

Some actions, such as suddenly turning off the camcorder or removing the recording media while data is being recorded, can cause data errors on the recording media. In such case, you may be able to recover the data if a message is displayed indicating that a clip needs recovering. You can recover the clips from a playback index screen.

Operating modes: MXF MP4 4K HD

1 Open the index screen with the clip you want to recover (102).

2 Select the clip to recover.

- The clip is indicated by a [?] in the thumbnail.

3 When the camcorder prompts you to recover the clip, touch [Yes].

4 After the clip has been recovered, touch [OK].

NOTES

- This procedure may delete clips shorter than 0.5 seconds in length. Additionally, up to 0.5 seconds may be deleted from the end of the clips.
- In some cases, it may not be possible to recover the data. This is more likely when the file system is corrupted or the recording media is physically damaged.
- Photos and MP4 clips cannot be recovered.
- Only clips recorded with this camcorder can be recovered.

Using the Remote Controller

The camcorder can be operated remotely. You can use the supplied remote controller as described in this section. You can also use the camcorder's network functions and wirelessly connect a compatible device to control the camcorder. For details about wirelessly controlling the camcorder, refer to *Browser Remote: Controlling the Camcorder from a Network Device* (📖 127).

Operating modes: [ ] [ ] [ ] [ ] | MXF MP4 | 4K HD

Inserting the Battery

Insert the supplied lithium button battery into the remote controller before use.

1 Press the tab in the direction of the arrow (①) and pull out the battery holder (②).

2 Place the lithium button battery with the + side facing up (③).

3 Insert the battery holder (④).

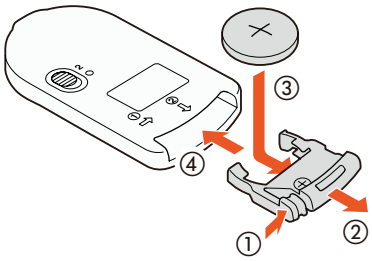

Activating the Remote Sensor

1 Press the MENU button.

2 Open the [Wireless Remote Control] submenu.

[System Setup] ➤ [2] (in [ ] mode) or [1] (in [ ] mode) ➤ [Wireless Remote Control]

3 Select [ON On] and then touch [✕].

[System Setup]

[2] (in [ ] mode) or [1] (in [ ] mode)

[Wireless Remote Control]

[OFF Off]

Using the Remote Controller to Operate the Camcorder

When using the remote controller, point it at the camcorder's remote sensor.

- The position of the delay switch on the remote controller determines how the remote controller operates. Refer to the following table.

Delay switch position	[ ] mode	[ ] mode
2	Starts and stops recording a video clip.	Takes a photo after a 2-second delay.
●	Takes a photo, even while recording video clip.	Takes a photo immediately.

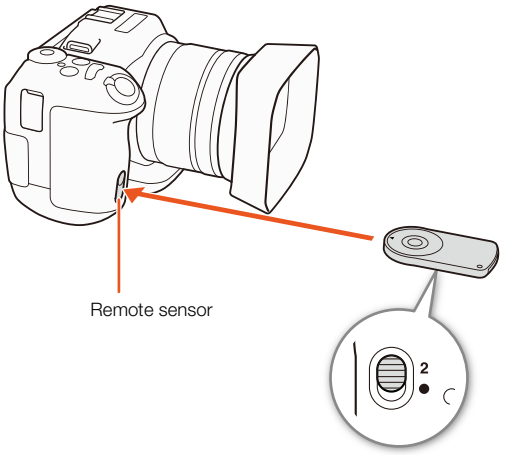

NOTES

- The camcorder may not operate correctly when used under fluorescent or LED lights. Make sure to use the camcorder away from such light sources as much as possible.
- The camcorder may not operate correctly when a remote controller for another device is pointed at the camcorder and operated.
- When the camcorder cannot be operated with the supplied remote controller, or when it can only be operated at very close range, replace the battery.
- The supplied remote controller may not operate correctly when the remote sensor is located under strong light sources or direct sunlight.
- The camcorder may not operate correctly when a flash fires. If a flash is being used in the vicinity, deactivate the remote sensor as described in the previous procedure.

Recording Video and Taking Photos

This section explains the recording basics. Before you begin recording clips*, make a test recording first to check if the camcorder operates correctly. Record a 4K clip (on the CFast card; in MXF format) at 305 Mbps (frame rate of 25.00P) for approximately 5 minutes and an HD clip (on the SD card; in MXF format) at 50 Mbps (frame rate of 50.00P) for approximately 15 minutes**. Should the camcorder fail to operate correctly, refer to *Troubleshooting* (📖 142).

For details on recording audio, refer to *Recording Audio* (📖 80).

* "Clip" refers to a single movie unit recorded with a single recording operation.

**"4K clip" refers to a clip recorded in 4K resolution while "HD clip" refers to a clip recorded in HD resolution.

Preparing to Record

1 Remove the lens cap.

2 Attach the lens hood (📖 21) and, if necessary, attach the viewfinder unit (📖 21).

3 Attach a charged battery pack to the camcorder (📖 18).

4 Insert recording media as necessary (📖 32, 34).

- Insert a CFast card to record 4K clips (MXF format); insert an SD card to record HD clips (MXF or MP4 format) and photos.

5 Adjust the viewfinder unit, if necessary (📖 22).

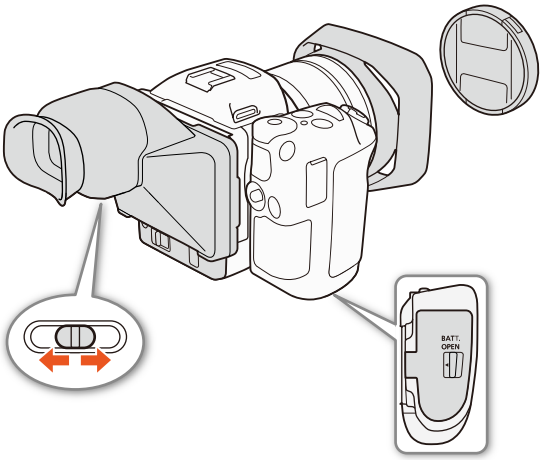

Basic Recording

This camcorder uses the same button to record video clips and take photos. In this manual, when you are recording video clips, this button is referred to as the START/STOP button; when you are shooting photos, it is referred to as the PHOTO button.

Operating modes: MXF MP4 | 4K HD

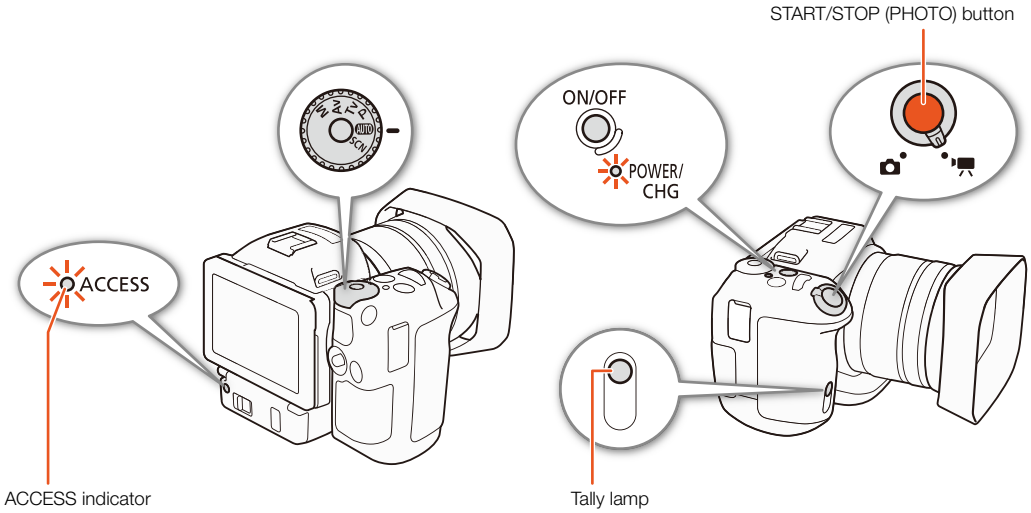

1 Set the movie/photo switch to to record clips or to take photos.

2 Set the shooting mode dial to the desired shooting mode (51).

3 Press the ON/OFF button to turn on the camcorder.

- The POWER/CHG indicator will illuminate in green.

To shoot clips

4 Press the START/STOP button.

- Recording starts. The tally lamp illuminates and the ■ icon at the top of the screen changes to ●.
- The ACCESS indicator flashes in red intermittently as the camcorder records to the recording media.
- You can also take a photo while recording a clip (40).

5 Press the START/STOP button to stop the recording.

- The clip is recorded on the recording media and the camcorder enters record standby mode. The tally lamp will also go out.

6 Press and hold the ON/OFF button until the POWER/CHG indicator goes out.

- Make sure the ACCESS indicator has also gone out.

To take photos

4 Press the PHOTO button halfway.

- **When the FOCUS switch is set to A (autofocus):** If the subject is not in focus, ● will flash in yellow. Once the focus is automatically adjusted, ● will turn green and one or more AF (autofocus) frames will appear. You can also change the autofocus method (📖 68).

5 Press the PHOTO button fully.

- The ACCESS indicator flashes in red intermittently as the camcorder records to the recording media.

6 Press and hold the ON/OFF button until the POWER/CHG indicator goes out.

- Make sure the ACCESS indicator has also gone out.

IMPORTANT

- Observe the following precautions while the ACCESS indicator is on or flashing in red. Failure to do so may result in permanent data loss.
  - Do not open the recording media slot cover and do not remove the recording media.
  - Do not disconnect the power source or turn off the camcorder.
- Be sure to save your recordings regularly (📖 115, 118), especially after making important recordings. Canon shall not be liable for any loss or corruption of data.

NOTES

- The built-in microphone may pick up operation noise from the camcorder while recording. Using a commercially-available external microphone may reduce this noise.
- You can also press the transmit button on the supplied remote controller to record clips and take photos(📖 36).
- You can select the length of time to review a photo after it is recorded (📖 137).

Taking Photos During 🎥 Mode

If you set an assignable button to [PHOTO Photo] (📖 99), you can take a photo while recording a clip or while the camcorder is in record standby mode. When you press the button, 📷 ▷ SD will appear on the upper right of the screen.
The size of the photo depends on whether the resolution is set to 4K or HD. When the resolution is set to 4K (MXF), the photo size will be 3840x2160; when set to HD (MXF or MP4), 1920x1080.

NOTES

- You can even capture a photo in 🎥 mode while a clip is being played back (📖 108).
- You cannot take a photo while recording a clip when an external device is connected to the HDMI OUT terminal or when [Slow & Fast Motion] is set to [x1/4] or [x1/2].

Selecting the Photo Size

[Recording Setup]
[1]
[Photo Aspect Ratio]
[L 4:3 4000x3000]

You can select the size of recorded photos.

Operating modes: MXF MP4 | 4K HD

1 Press the MENU button.

2 Open the [Photo Aspect Ratio] submenu.
[Recording Setup] ➤ [1] ➤ [Photo Aspect Ratio]

3 Select the desired size and then touch [✕].

- The displayed available number of photos is approximate and based on the currently selected photo size.

Shooting Continuous Photos (Drive Mode)

Using drive mode, you can take a burst of photos of your subject.

Operating modes: MXF MP4 | 4K HD

1 Touch [FUNC.] and then touch [ ] [Drive Mode].

2 Select the desired option and then touch [✕].

Options

[Single Shot]:	Takes a single photo when you press the PHOTO button.
[Continuous]:	Takes a burst of photos as long as you hold the PHOTO button pressed down. The same focus applied to the first photo will also be applied to the entire series. The camcorder will shoot at a rate of approx. 3.6 shots/second.
[AF Continuous]:	Takes a burst of photos as long as you hold the PHOTO button down. The focus will be adjusted throughout the series. Release your finger from the PHOTO button to stop shooting.

NOTES

- **About the [AF Continuous] option:** Depending on the Special Scene mode when the shooting mode is set to SCN, the zoom position and other camera settings, the interval between shots may not be the same or the shooting speed may decrease.

Remote Operation Using Browser Remote

After completing the necessary preparations (📖 127), you can start and stop recording from a connected device using the Browser Remote application.

Operating modes: MXF MP4 4K HD

1 Press [LIVE VIEW ON/OFF] to show the camcorder's live view image on the Browser Remote screen.

- The position of the camcorder's movie/photo switch will determine whether the Browser Remote screen displays controls for recording clips or taking photos.

To shoot clips

2 Press [START/STOP].

- The recording operation indicator changes to [●REC] and the center of the START/STOP button lights up in red.
- The time code displayed on the Browser Remote screen is the same as on the camcorder.
- Press [START/STOP] again to stop the recording.

To take photos

2 Press [PHOTO].

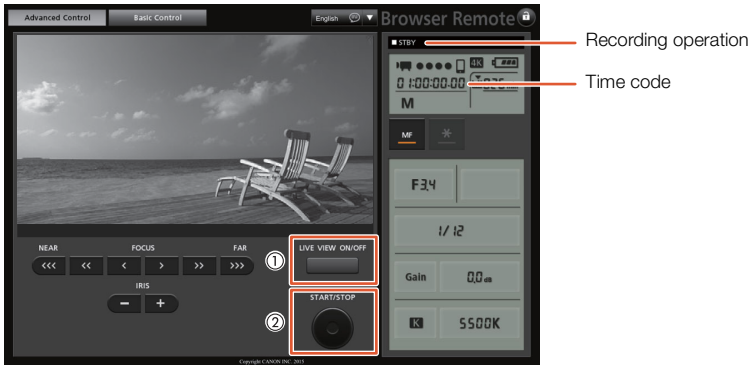

Screenshot for recording clips

NOTES

- The Browser Remote application has a key lock function that is limited only to the controls on the application's screens (you will still be able to use the controls on the camcorder). Press [🔒] to lock the application's controls; press [🔒] to reactivate them.

Onscreen Icons and Displays

Refer to this section for an explanation of the various icons and screen displays that appear in [ ] and [ ] modes. They may differ depending on the shooting mode and settings in the FUNC. menu and setup menus. Some icons that appear in [ ] mode also appear in [ ] mode. If the camcorder is in [ ] mode and you do not find an icon in these tables for [ ] mode, refer to *Icons that appear during* [ ] *mode* (46).

Operating modes: [ ] [ ] [ ] [ ] | MXF MP4 | 4K HD

Icons that appear during [ ] mode

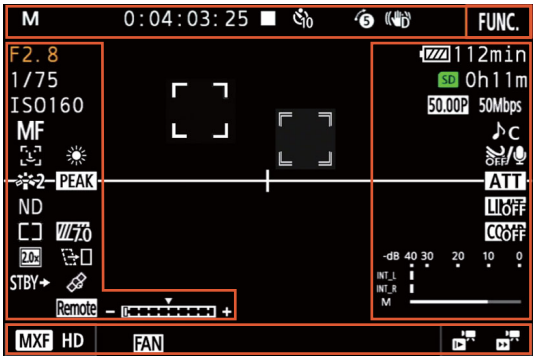

Icons on the top of the screen

Icon/Display	Description	[ ]
M, Av, Tv, P, AUTO, , , , , , , , ,	Shooting mode	51
0:00:00:00	Time code	77
●, ■	Recording operation ●: recording, ■: record standby	38
2, 10, 0,	Self timer	93
	Appears when recording a photo in record standby mode.	40
5	Pre-recording mode	91
, ,	Image stabilizer	75
FUNC.	Button to open the FUNC. menu.	30, 133

Icons on the left side of the screen

Icon/Display	Description	📖
F0.0	Aperture value	51, 53
1/0000	Shutter speed	51, 54
±0/0, ✳	±0/0: exposure adjustment value, ✳: exposure locked	60
ISO000000, 00dB	ISO000000: ISO speed, 00dB: gain	51
ISO, GAIN	ISO: auto ISO limit, GAIN: AGC limit	58
AF, MF 0.0m	Focus mode • While focusing in manual focus mode, the estimated distance to the subject will be displayed as well.	68
	Face detection and tracking	73
, , , , , , K, ,	White balance	63
2, 3, 4, 5, ,	Looks	65
PEAK, PEAK	Peaking	71
ND	ND filter	136
, ,	Light metering mode	62
70, 100	Zebra patterns	76
20x	Digital tele-converter	67
	Rolling shutter distortion reduction	136
STBY ➡, REC ➡	HDMI recording command	140
	GPS signal: continuously on - satellite signal acquired; flashing - satellite signal not acquired. • Displayed only when an optional GP-E2 GPS Receiver is connected to the camcorder.	88
Remote	Browser Remote: in white – preparations for connections completed; in yellow – connecting to or disconnecting from the control device.	127
	Exposure bar	53

Icons in the center of the screen

Icon/Display	Description	📖
OFF	Remote sensor disabled	36
	Onscreen markers	76
	Face detection. When a face is detected, a white frame will appear around the main subject's face.	73
	User-selected tracking frame	73

Icons on the right side of the screen

Icon/Display	Description	📖
, , , , , 000 min	Remaining battery charge The icon shows an estimate of the remaining charge. The remaining recording time is displayed, in minutes, next to the icon. • When is displayed, replace the battery pack with a fully charged one. • Depending on the conditions of use, the actual battery charge may not be indicated accurately.	–
SD	Recording a photo. If an SD card error occurs, will appear instead.	40
CFast 0h00m, SD 0h00m	Recording media status and available recording time estimate • The remaining available space is displayed, in minutes, next to the icon. • When the icon appears in red followed by [END], there is no more available space and recording will stop.	–
W T	Zoom indicator	67
50.00P, 50.00i, 25.00P 000 Mbps	Frame rate Bit rate	49
, , , , , , ,	Audio scenes	80
Low/, OFF/	Wind screen	82
ATT, A OFF	Built-in/external microphone attenuator	83, 84
LIM OFF	Audio limiter	85
CO OFF, COMP H	Audio compressor	86
dB 40 30 20 10 0 INT_L INT_R M	Audio recording level	81

Icons on the bottom of the screen

Icon/Display	Description	📖
[MXF 4K], [MXF HD], [MP4 HD]	Button to open the [Movie Format] submenu and currently selected recording movie format (MXF/MP4) or resolution (4K/HD).	49
	When the camcorder's internal temperature has risen to a predetermined level, will appear in yellow. If it continues to rise, will appear in red.	144
FAN	Cooling fan operation	48
MAGN.	Magnification (focus assistance function)	71
x1/4, x1/2 x2, x4, x10, x20, x60, x120, x1200	Button to open the [Slow & Fast Motion] submenu. Currently selected slow motion rate. Currently selected fast motion rate.	90

Icons that appear during [camera] mode

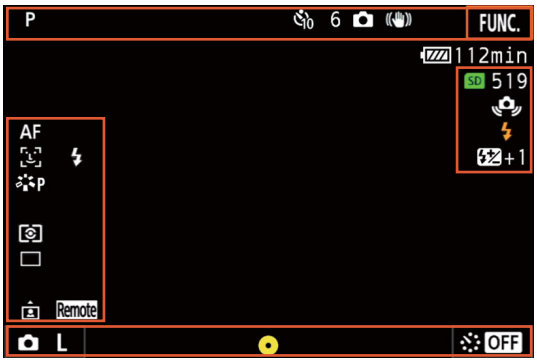

Icons on the top of the screen

Icon/Display	Description	[book]
2, 10, 0, [camera]	Self timer	93

Icons on the left side of the screen

Icon/Display	Description	[book]
[sun], [house], [cloud], [fluorescent], [fluorescent H], [shade], [flash], K, 1, 2	White balance	63
S, P, L, N, Se, M, [custom], [custom]	Looks	65
[eval], [center], [spot]	Light metering mode	62
[single], [continuous], [AF continuous]	Drive mode	41
[orientation]	Orientation detection	94

Icons on the right side of the screen

Icon/Display	Description	[book]
SD 000	Recording media and available number of photos.	–
[flash]	Optional Speedlite has been attached and turned on. When flash exposure compensation has been set, the compensation level will also be displayed.	96
[shake]	Camcorder shake warning • If this icon appears, we recommend stabilizing the camcorder, for example, by mounting it on a tripod.	–

Icons on the bottom of the screen

Icon/Display	Description	📖
L, S	Button to open the [Photo Aspect Ratio] submenu and currently selected photo size (L or S).	41
	Indicates whether the focus and/or exposure is locked while the PHOTO button is pressed halfway. • In green – focus and exposure are locked (during auto focus mode); exposure is locked (manual focus mode). • In yellow (flashing) – focus is not locked. If the zoom is operated while the icon is green in autofocus mode, it will start flashing in yellow. • In white (flashing) – the camcorder is attempting to focus on the subject.	–
, OFF, 5sec, 10sec, 30sec, 1min, 10min	Button to open the [Interval Recording] submenu and currently selected interval length.	92

NOTES

- You can press the DISP. button to switch the onscreen displays in the following sequence.
  Show all onscreen displays → show only onscreen markers* and the recording operation display → hide all onscreen displays except the recording operation display.
  * Only when an onscreen marker is selected (📖 76).

Using the Fan

The camcorder uses an internal cooling fan to reduce the camcorder's internal heat.

Operating modes: MXF MP4 4K HD

1 Press the MENU button.

2 Open the [Fan] submenu.

[System Setup] ➤ [1] ➤ [Fan]

3 Select the desired option and then touch [✕].

[System Setup] ▸ [1] ▸ [Fan] ▸ [ON On]

Options

[A Automatic]: The fan runs while the camcorder is not recording and it is automatically turned off while the camcorder is recording video (while the ● icon appears at the top of the screen). However, if the internal temperature of the camcorder is too high, the fan will be activated automatically (in that case, FAN will appear next to the icon). When the camcorder's temperature has decreased sufficiently, the fan will be turned off. Use this setting when you do not want the camcorder to pick up the operating sound of the cooling fan.

[ON On]: The fan runs at all times. Use this default setting in most cases.

IMPORTANT

- While the fan is running, the exhaust vent will emit warm air.

NOTES

- Be careful not to cover with tape or otherwise obstruct the cooling fan's air intake and exhaust vents (marked as AIR INTAKE/EXHAUST VENT).

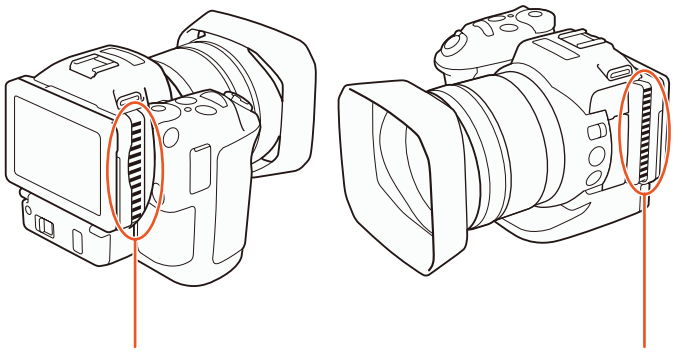

Video Configuration: Movie Format (MXF/MP4), Resolution (4K/HD), Frame Rate and Bit Rate

Before you record, select the movie format (MXF or MP4), resolution (4K or HD), frame rate and bit rate that best match your project's needs. Available frame rate and bit rate options will depend on the movie format and resolution selected.

Operating modes: MXF MP4 | 4K HD

Selecting the Movie Format (MXF or MP4) and Resolution (Recording in 4K or HD)

You can easily select both the movie format and resolution (frame size) your clips will be recorded with.

Movie format: For your HD clips, you can choose a movie format of either MXF or MP4. Clips recorded in MXF format have superb picture quality during playback while those recorded in MP4 format are versatile and can easily be played back on smartphones and tablets, or uploaded to the Web.

Resolution: This camcorder allows you to record clips in 4K or HD. The resolution of 4K clips is 3840x2160 while that of HD clips is 1920x1080. Note that 4K clips are recorded in MXF format and saved to the CFast card; HD clips can be either movie format and saved to the SD card.

1 Touch [MXF 4K], [MXF HD] or [MP4 HD] on the bottom left of the screen.
- The icon will show the currently selected option.
- Alternatively, you can select [Recording Setup] ➤ [1] ➤ [Movie Format].

2 Select the desired option and then touch [↩] or [✕].

NOTES

- When recorded, MP4 clips are automatically assigned file names, which consist of the prefix "MVI_" and a four-digit number that identifies the MP4 clip. You can select how the clips are numbered (📖 138).
- The following types of MP4 clips will be recorded as multiple files (but will be played back without interruption with the camcorder). You can use the software Data Import Utility to join clips split into multiple files (📖 117).
  - Clips exceeding 4 GB
  - Clips recorded at 50.00P exceeding 30 minutes
  - Scenes recorded with a frame rate other than 50.00P exceeding 1 hour
- A single MP4 recording operation can go on continuously for about 12 hours. Then the camcorder will stop automatically.

Selecting the Frame Rate and Bit Rate

Follow the procedure below to select the frame rate and bit rate. Choose the combination of frame rate and bit rate that best suits your needs.

1 Press the MENU button.

2 Open the recording options submenu of the movie format/ resolution you wish to adjust.

[Recording Setup] ➤ [1] ➤ [MXF 4K Recording], [MXF HD Recording] or [MP4 HD Recording]

3 Select the desired option and then touch [✕].

- Icons of the selected option will appear on the right side of the screen.

[Recording Setup]

[1]

[MXF 4K Recording] .....
[25.00P 25.00P / 305 Mbps]
[MXF HD Recording] .....
[50.00P 50.00P / 50 Mbps]
[MP4 HD Recording] .....
[25.00P 25.00P / 35 Mbps]

NOTES

- The [P] after the frame rate indicates progressive scan while [i] indicates interlaced scan.

Available movie format, resolution, frame rate and bit rate settings

Movie format / Resolution	Frame rate / Bit rate
MXF 4K (3840x2160)	25.00P 25.00P / 305 Mbps
	25.00P 25.00P / 205 Mbps
MXF HD (1920x1080)	50.00P 50.00P / 50 Mbps
	50.00i 50.00i / 35 Mbps
	25.00P 25.00P / 35 Mbps
MP4 HD (1920x1080)	50.00P 50.00P / 35 Mbps
	25.00P 25.00P / 35 Mbps

NOTES

- For details on the signal output from the HDMI OUT terminal, refer to *Video Output Configuration* (📖 112).
- When the resolution is set to 4K, you can use the [Camera Setup] ➤ [3] ➤ [Rolling Shutter Reduction] setting to reduce rolling shutter distortion.

Shooting Modes

Operating modes: MXF MP4 4K HD

Setting the Shooting Modes

This camcorder offers various shooting modes to help bring your creative intent to life. After you select a mode, you can adjust related settings, such as the shutter speed, using the control dial. You can also use the FUNC. menu or Browser Remote application.

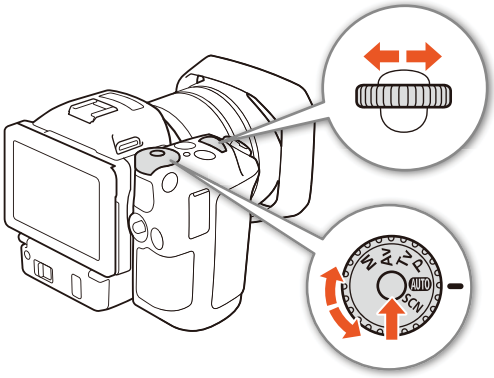

1 While holding down the shooting mode dial button, turn the dial to the desired shooting mode.
- The available shooting modes are explained in the sections in the following few pages.
- Depending on the shooting mode, you may be able to adjust the aperture, shutter speed, ISO speed or gain.

2 Turn the control dial to adjust the setting, if available.

Manual Exposure (M)

With this mode, you have full access to menus, settings and other functions. When shooting, you can use the control dial to adjust the aperture, shutter speed or ISO speed/gain*. This mode gives you the most freedom over shooting settings. First, assign the function that will be adjusted by the control dial.

* The gain can be adjusted only for clips, not photos.

1 Set the shooting mode dial to **M**.

2 Press the MENU button.

3 Open the [Control Dial] submenu.

[System Setup] ➤ [3] (in mode) or [2] (in mode) ➤ [Control Dial]

4 Select the desired function to assign to the control dial.

5 Touch [✕].
- The current value will be highlighted in orange.
- During mode, when you select [ISO ISO/Gain], you can select whether to have control over the ISO speed or gain with the procedure below before touching [✕].

6 Turn the control dial to select the desired value.
- You can also select the desired value using the FUNC. menu or Browser Remote application (56).

[System Setup]
▽
[3] (in mode) or [2] (in mode)
▽
[Control Dial]
▽
[IRIS Aperture]

To select the ISO speed or gain

1 Touch [↩].

2 Open the [ISO/Gain] submenu.
[Camera Setup] ➤ [2] ➤ [ISO/Gain]

3 Select the function to adjust.

[Camera Setup]
[2]
[ISO/Gain]
[ISO ISO]

Available aperture settings

	Aperture
Clips (1/4-stop increments)	F2.8, F3.2, F3.4, F3.7, F4.0, F4.4, F4.8, F5.2, F5.6, F6.2, F6.7, F7.3, F8.0, F8.7, F9.5, F10, F11
Photos (1/3-stop increments)	F2.8, F3.2, F3.5, F4.0, F4.5, F5.0, F5.6, F6.3, F7.1, F8.0, F9.0, F10, F11

Available shutter speed settings*

	Shutter speed
Clips (1/4-stop increments)	1/2, 1/3, 1/4, 1/5, 1/6, 1/7, 1/8, 1/10, 1/12, 1/14, 1/17, 1/20, 1/25, 1/29, 1/30, 1/33, 1/40, 1/50, 1/60, 1/75, 1/90, 1/100, 1/120, 1/150, 1/180, 1/210, 1/250, 1/300, 1/350, 1/400, 1/500, 1/600, 1/700, 1/800, 1/1000, 1/1200, 1/1400, 1/1600, 1/2000
Photos (1/3-stop increments)	0”5**, 0”4**, 0”3**, 1/4, 1/5, 1/6, 1/8, 1/10, 1/13, 1/15, 1/20, 1/25, 1/30, 1/40, 1/50, 1/60, 1/80, 1/100, 1/125, 1/160, 1/200, 1/250, 1/320, 1/400, 1/500, 1/640, 1/800, 1/1000, 1/1250, 1/1600, 1/2000

* During slow and fast motion recording, available values will vary depending on the selected slow/fast motion rate.
** These values represent 0.5 seconds, 0.4 seconds and 0.3 seconds, respectively.

Available ISO speed settings

	ISO speed
Clips/Photos (1/3-stop increments)	160, 200, 250, 320, 400, 500, 640, 800, 1000, 1250, 1600, 2000, 2500, 3200, 4000, 5000, 6400, 8000, 10000, 12800, 16000, 20000

Available gain settings

	Gain
Clips (1.5-dB increments)	0.0 dB, 1.5 dB, 3.0 dB, 4.5 dB, 6.0 dB, 7.5 dB, 9.0 dB, 10.5 dB, 12.0 dB, 13.5 dB, 15.0 dB, 16.5 dB, 18.0 dB, 19.5 dB, 21.0 dB, 22.5 dB, 24.0 dB, 25.5 dB, 27.0 dB, 28.5 dB, 30.0 dB, 31.5 dB, 33.0 dB, 34.5 dB, 36.0 dB, 37.5 dB, 39.0 dB, 40.5 dB, 42.0 dB
Clips (0.5-dB increments when [FINE Fine]* is selected)	0.0 dB to 42.0 dB

* [Camera Setup] ➤ [2] ➤ [Gain Increment].

NOTES

- When the rate for slow & fast motion recording mode is set to [x1/4] (□ 90), or the look is set to [✿3 Wide DR] or [✿5 Canon Log] (□ 65), the lowest available ISO speed is 500 and the lowest available gain setting is 9.0 dB (8.5 dB when [FINE Fine] is selected).
- While the rate for slow & fast motion recording mode is set to [x1/4] (□ 90) and the look is set to [✿3 Wide DR] or [✿5 Canon Log] (□ 65), the lowest available ISO speed is 1250 and the lowest available gain setting is 18.0 dB (17.0 dB when [FINE Fine] is selected).

The Exposure Bar

When the shooting mode is set to **M**, the exposure bar will appear, giving you an indication of the current exposure. The ▼ on top of the exposure bar indicates optimal exposure without any shift (AE±0) and the indicator inside the exposure bar represents the current exposure.

When the difference between current and optimal exposure is larger than ±2 EV, the indicator will flash at the edge of the exposure bar.

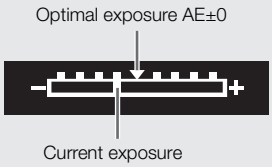

Aperture Priority AE (Av)

In this mode, after you adjust the aperture value with the control dial, the camcorder automatically sets the appropriate shutter speed to obtain the optimal exposure for the subject. Adjusting the aperture is useful in changing the depth of field, which can allow you to blur the background and make the subject stand out more.

1 Set the shooting mode dial to **Av**.
- The aperture value will highlighted in orange.

2 Turn the control dial to adjust the aperture value.
- You can also adjust the aperture value using the FUNC. menu or Browser Remote application (□ 56).
- For available settings, refer to *Manual Exposure* (**M**) (□ 52).

NOTES

- Depending on the brightness of the subject, the camcorder will not be able to control the exposure and the aperture value will flash. In such case, select a different aperture value.

Shutter Priority AE (Tv)

In this mode, after you adjust the shutter speed, the camcorder automatically sets the appropriate aperture to obtain the optimal exposure for the subject. The shutter speed affects how moving objects are captured – you can make fast-moving subjects, such as a waterfall, appear to be motionless or impart a sense of movement to them.

1 Set the shooting mode dial to Tv.
- The shutter speed will highlighted in orange.

2 Turn the control dial to adjust the shutter speed.
- You can also adjust the shutter speed using the FUNC. menu or Browser Remote application (56).
- For available settings, refer to *Manual Exposure* (M) (52).

NOTES
- Depending on the brightness of the subject, the camcorder will not be able to control the exposure and the shutter speed value will flash. In such case, select a different shutter speed.

Program AE (P)

The camcorder automatically sets the aperture, shutter speed, gain (for clips) and ISO speed to obtain the optimal exposure for the subject.

Set the shooting mode dial to P.

Auto (AUTO)

Use this mode to let the camcorder select various settings. This is the perfect mode for those times when you do not want to take the time to adjust settings.

Set the shooting mode dial to AUTO.

Special Scene (SCN)

You can select the Special Scene mode that best matches your shooting situation. Some shooting situations, such as when the subject is lit with just a spotlight, can be tricky so you may find setting the appropriate Special Scene mode to be convenient.

1 Set the shooting mode dial to SCN.

2 Touch [FUNC.] and then touch [Scene].

3 Select the desired option and then touch [✕].

Options

[Portrait]: The camcorder uses a large aperture, to achieve a sharp focus on the subject while blurring the background.

[Sports]: To record sports scenes such as tennis or golf.

[Night Scene]: To record nightscapes with lower noise.

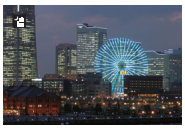

[Snow]: To record in bright ski resorts without the subject being underexposed.

[Beach]: To record on a sunny beach without the subject being underexposed.

[Sunset]: To record sunsets in vibrant colors.

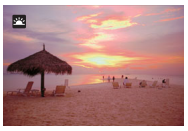

[Low Light]: To record in low-light situations.

[Spotlight]: To record spotlit scenes.

[Fireworks]: To record fireworks.

NOTES

- [Portrait]/[Sports]/[Snow]/[Beach]: The picture may not appear smooth during playback.
- [Snow]/[Beach]: The subject may become overexposed on cloudy days or in shaded places. Check the image on the screen.
- [Low Light]:
  - Moving subjects may leave a trailing afterimage.
  - Picture quality may not be as good as in other modes.
  - White points may appear on the screen.
  - Autofocus may not work as well as in other modes. In such case, adjust the focus manually.
- [Fireworks]/[Low Light]: To avoid camcorder blur (blur due to the camcorder moving) we recommend using a tripod.

Adjusting Shooting Mode Settings

You can adjust the settings related to the various shooting modes using the FUNC. menu or remotely using the Browser Remote application.

Using the FUNC. Menu

To change the aperture value when the shooting mode is M or Av

1 Touch [FUNC.] and then touch IRIS [Aperture].
- The aperture adjustment dial will appear at the bottom of the screen.

2 Drag your finger left/right along the dial to select the desired value.
- You can also press the joystick itself so that the position of the current value is highlighted in orange and then push left/right to adjust the value.

3 Touch [✕].
- The selected aperture value will appear on the upper left of the screen.

To change the shutter speed when the shooting mode is M or Tv

1 Touch [FUNC.] and then touch SHTR [Shutter Speed].
- The shutter speed adjustment dial will appear at the bottom of the screen.

2 Drag your finger left/right along the dial to select the desired value.
- You can also press the joystick itself so that the position of the current value is highlighted in orange and then push left/right to adjust the value.

3 Touch [✕].
- The selected shutter speed will appear on the upper left of the screen.

To change the ISO speed or gain when the shooting mode is M

1 Touch [FUNC.] and then touch ISO [ISO] or GAIN [Gain].
- Note that during [📷] mode, you cannot adjust the gain.
- The ISO speed or gain adjustment dial will appear at the bottom of the screen.
- You can use the [Camera Setup] ➤ [2] ➤ [ISO/Gain] setting to switch between ISO speed and gain.

2 Drag your finger left/right along the dial to select the desired value.
- You can also press the joystick itself so that the position of the current value is highlighted in orange and then push left/right to adjust the value.

3 Touch [✕].
- The selected ISO speed or gain value will appear on the upper left of the screen.

Using the Browser Remote Application

After completing the necessary preparations (📖 127), you can change the shutter speed, aperture, ISO speed or gain from a connected device using the Browser Remote application.

To change the aperture value when the shooting mode is M or Av

1 Press the current aperture value on the Browser Remote screen.

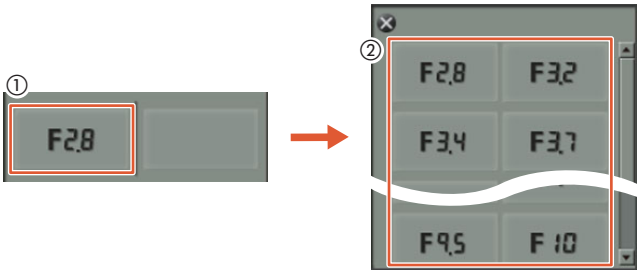

2 Select the desired aperture value from the list.

- The selected value will be displayed on the Browser Remote screen and applied on the camcorder.
- Alternatively, you can press [IRIS +] to open the aperture or [IRIS -] to close the aperture in approximately 1/4-stop increments for clips or 1/3-stop increments for photos.

To change the shutter speed when the shooting mode is M or Tv

1 Press the current shutter speed value on the Browser Remote screen.

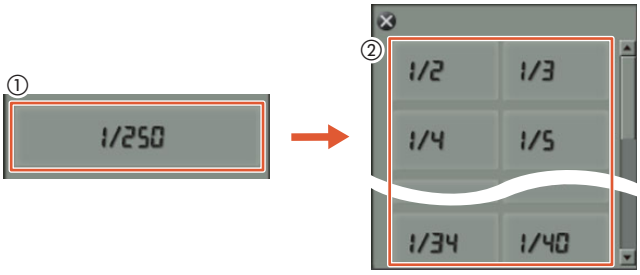

2 Select the desired shutter speed value from the list.

- The selected value will be displayed on the Browser Remote screen and applied on the camcorder.

To change the ISO speed or gain when the shooting mode is M

1 Press the current ISO speed or gain value on the Browser Remote screen.

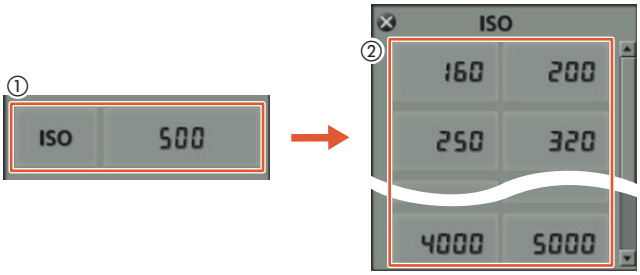

- Note that during [camera] mode, you cannot adjust the gain.
- You can touch [ISO] and then the desired setting ([ISO] or [Gain]) to switch between the two.

2 Select the desired ISO speed or gain value from the list.

- The selected value will be displayed on the Browser Remote screen and applied on the camcorder.

Automatic Gain and ISO Limits

Depending on the brightness of the surroundings, the camcorder will automatically raise the gain or ISO speed to try to get a brighter picture. Because doing so can lead to video noise, you can select a maximum limit for how high levels are raised. These limits are referred to as the automatic gain control (AGC) limit and auto ISO limit. Shooting with a smaller limit is useful as it results in a darker picture but less noise. This function is available when the shooting mode is set to **P**, **Tv** or **Av**.
Because only the ISO speed can be adjusted for photos, in [📷] mode, press the MENU button and start the procedure below from step 4, selecting the options for ISO speed.

Operating modes: [🎥] [📷] [▶] [📷] | MXF MP4 | 4K HD

1 Press the MENU button.

2 Open the [ISO/Gain] submenu.
[🎥 Camera Setup] ➤ [2] ➤ [ISO/Gain]

3 Select the option that corresponds to the limit you want to set and then touch [↩].

[🎥 Camera Setup]
[2]
[ISO/Gain]
[ISO]

4 Back in the setup menus, open the submenu to set the AGC limit or auto ISO limit.
[🎥 Camera Setup] (in [🎥] mode) or [📷 Camera Setup] (in [📷] mode) ➤ [1] ➤ [AGC Limit] or [Auto ISO Limit]

5 Touch [ISO] or [GAIN].
- The AGC limit or auto ISO limit dial will appear at the bottom of the screen.
- Touch [**A**] to remove the limit.

6 Drag your finger left/right along the dial to select the desired value.
- You can also push the joystick up/down until the position of the current value is highlighted in orange and then push left/right to adjust the value.

7 Touch [✕].
- The selected icon will appear on the left side of the screen.

[🎥 Camera Setup] (in [🎥] mode) or [📷 Camera Setup] (in [📷] mode)
[1]
[AGC Limit] or [Auto ISO Limit]

Available ISO limit settings

	ISO speed
Clips (1/3-stop increments)	160, 200, 250, 320, 400, 500, 640, 800, 1000, 1250, 1600, 2000, 2500*, 3200*, 4000*
Photos (1/3-stop increments)	160, 200, 250, 320, 400, 500, 640, 800, 1000, 1250, 1600, 2000

* When this value is selected in [🎥] mode and the camcorder is switched to [📷] mode, the auto ISO limit will be set to ISO2000.

Available AGC limit settings

	Gain
Clips (1.5-dB increments)	0.0 dB, 1.5 dB, 3.0 dB, 4.5 dB, 6.0 dB, 7.5 dB, 9.0 dB, 10.5 dB, 12.0 dB, 13.5 dB, 15.0 dB, 16.5 dB, 18.0 dB, 19.5 dB, 21.0 dB, 22.5 dB, 24.0 dB, 25.5 dB, 27.0 dB, 28.5 dB

NOTES

- When the rate for slow & fast motion recording mode is set to [x1/4] (📖 90), or the look is set to [✿3 Wide DR] or [✿5 Canon Log] (📖 65), the lowest available ISO speed is 500 and the lowest available gain setting is 9.0 dB.
- While the rate for slow & fast motion recording mode is set to [x1/4] (📖 90) and the look is set to [✿3 Wide DR] or [✿5 Canon Log] (📖 65), the lowest available ISO speed is 1250 and the lowest available gain setting is 18.0 dB.

Exposure

In some shooting modes, the camcorder will automatically adjust the exposure. In such cases, you can lock the exposure or use a touch exposure function to automatically set the optimal exposure for the subject you select. You can also use AE shift to darken or lighten the image that was set during automatic exposure. These functions are not available when the shooting mode is set to AUTO, M or SCN*.

* Exposure lock and touch exposure are available in all scene modes except [Fireworks].

Operating modes: MXF MP4 4K HD

Exposure Lock

1 Touch [FUNC.] and then touch [Exposure Lock].
- The exposure adjustment screen will appear.

2 Touch [M].
- An adjustment dial will appear on the bottom of the screen. The exposure is locked but you can adjust it using the adjustment dial.

3 Drag your finger left/right along the dial to select the desired value.
- You can also push the joystick up/down until the position of the current value is highlighted in orange and then push left/right to adjust the value.
- Depending on the exposure, some values may be grayed out, which will affect the adjustment range.
- Touch [M] again to return the camcorder to automatic exposure.

4 Touch [✕] to lock the exposure at the selected value.
- If the exposure was just locked, will appear on the left side of the screen. If the exposure was locked and adjusted, and the selected adjustment value will appear to the left of .

Using the Browser Remote Application

After completing the necessary preparations (127), you can manually change the exposure from a connected device using the Browser Remote application.

1 Press [].
- The gray line in the button will turn orange and the camcorder will change to manual exposure.

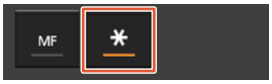

2 Press the exposure value button and then select the desired exposure adjustment level.
- The selected value will be displayed on the Browser Remote screen and applied on the camcorder.

Touch Exposure

You can have the camcorder adjust the exposure simply by touching the screen. The camcorder will meter the light at the point you touch and lock the exposure. Using the highlights setting, you can make sure that clouds or other white objects in the area you touch are not overexposed.

1 Touch [FUNC.] and then touch [Exposure Lock].
- The exposure adjustment screen will appear.

2 Touch a subject that appears inside the frame.
- The mark will flash and the exposure will be adjusted automatically so the area you touched will be correctly exposed.

- An adjustment dial will appear on the bottom of the screen. The exposure is locked but you can adjust it using the adjustment dial.

3 Drag your finger left/right along the dial to select the desired value.

- You can also push the joystick up/down until the position of the current value is highlighted in orange and then push left/right to adjust the value.
- When using only touch exposure, skip to step 6. To use the highlights setting, continue to step 4.

4 Touch [⊞] and then touch [H Highlights].

- Touch [N Normal] to turn off the highlights setting.

5 Touch [↩] to return to the exposure adjustment screen.

6 Touch [✕] to lock the exposure at the selected value.

- If the exposure was just locked, ✳ will appear on the left side of the screen. If the exposure value was locked and adjusted, in addition, ☒ and the selected exposure value will appear to the left of ✳.

AE Shift

When using AE shift, you can select from 17 AE shift levels for clips and 13 for photos.

1 Touch [FUNC.] and then touch ☒ [AE Shift].

- An adjustment dial will appear on the bottom of the screen.

2 Drag your finger left/right to move the adjustment dial to the desired setting.

- You can also push the joystick itself so that the position of the current setting is highlighted in orange and then push left/right to adjust the setting.

3 Touch [✕].

- ☒ and the selected AE shift level will appear on the left side of the screen.

Available AE shift levels for clips

-2	-1 3/4	-1 1/2	-1 1/4	-1	- 3/4	- 1/2	- 1/4	±0
+1/4	+1/2	+3/4	+1	+1 1/4	+1 1/2	+1 3/4	+2	

Available AE shift levels for photos

-2	-1 2/3	-1 1/3	-1	- 2/3	- 1/3	±0
+1/3	+2/3	+1	+1 1/3	+1 2/3	+2	

ⓘ NOTES

- AE shift is not available if exposure lock or touch exposure have been enabled.

Light Metering Mode

The camcorder measures light in the scene in order to set the optimal exposure settings. Depending on the scene, you may want to change the measurement method. This function is available when the shooting mode is set to **P**, **Tv** or **Av**.

Operating modes: MXF MP4 4K HD

1 Touch [FUNC.] and then touch [ ] [Metering Mode] (in mode) or [ ] [Metering Mode] (in mode).

2 Select the desired option and then touch [✕].

Options (for clips)

[ ] Standard]:	Averages the light metered from the entire screen, giving more weight to the subject in the center.
[ ] Spotlight]:	Use this option when recording a scene in which only a certain part of the picture is lit, for example, when the subject is lit by a spotlight.
[ ] Backlight]:	Suitable when recording backlit scenes.

Options (for photos)

[ ] Evaluative]:	Appropriate for standard shooting conditions.
[ ] Center-weighted Average]:	The camcorder suitably exposes a subject at the center of the scene.
[ ] Spot]:	The camcorder suitable exposes a subject at the center of the scene but within a narrower area.

White Balance

The white balance function helps you to accurately reproduce colors under different lighting conditions.

Operating modes: MXF MP4 4K HD

1 Touch [FUNC.] and then touch [AWB White Balance].

2 Select the desired option and then touch [✕].

- When you select [K Color Temperature], [Set 1] or [Set 2], set the color temperature or a custom white balance with the appropriate procedure below before touching [✕].

To set the color temperature ([K Color Temperature])

1 Touch [ ].
- The color temperature adjustment dial will appear on the bottom of the screen.

2 Drag your finger left/right along the dial to select the desired value.
- You can also push the joystick left/right to adjust the setting.

3 Touch [ ].

To set a custom white balance ([Set 1] or [Set 2])

1 Point the camcorder at a gray card or white object so it fills the whole screen.

2 Touch [ ] and then touch [Set WB].
- During the procedure, will flash quickly. When it stops flashing, the procedure is completed and the setting will be applied on the camcorder.

3 Touch [ ].

Options

[AWB Automatic]:	The camcorder automatically sets the white balance for natural looking colors.
[Daylight]*:	To record outdoors on a bright day.
[Shade]*:	To record in shaded places.
[Cloudy]*:	To record on a cloudy day.
[Fluorescent]*:	To record under warm white, cool white or warm-white-type (3-wavelength) fluorescent lighting.
[Fluorescent H]*:	To record under daylight or daylight-type (3-wavelength) fluorescent lighting.
[Tungsten]*:	To record under tungsten and tungsten-type (3-wavelength) fluorescent lighting.
[Flash]*:	To record when using an optional Speedlite. Available in mode only.
[K Color Temperature]*:	Allows you to set the color temperature between 2,000 K and 15,000 K.
[Set 1], [Set 2]:	Use the custom white balance settings to make white subjects appear white under colored lighting.

* Indicates a preset white balance option.

NOTES

- When recording a clip, you can use the [Camera Setup] [1] [Shockless WB] setting (136) to make the transition look smoother when you change the white balance settings.
- **When you select a custom white balance:**
  - Readjust the custom white balance if the light source or ND filter setting changes.
  - Depending on the light source, may keep flashing. The result will still be better than with [AWB Automatic].

- Using a custom white balance may provide better results in the following cases:
  - Changing lighting conditions
  - Close-ups
  - Subjects in a single color (sky, sea or forest)
  - Under mercury lamps, certain types of fluorescent lights and LED lights
- Depending on the type of fluorescent light, optimal color balance may not be obtained with [Fluorescent] or [Fluorescent H]. If the color looks unnatural, select [AWB Automatic] or a custom white balance setting.

Remote Operation Using Browser Remote

After completing the necessary preparations (📖 127), you can change the white balance option remotely from a connected device using the Browser Remote application.

1 Press the white balance button on the Browser Remote screen.

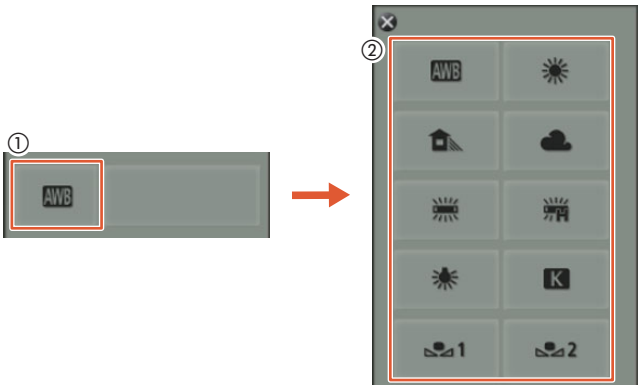

To set automatic white balance (AWB)

2 Select AWB.
- The selected option will be displayed on the Browser Remote screen and applied on the camcorder.

To set a preset white balance option

2 Select the desired option.
- If you selected [K], continue to the next step to set the color temperature. Otherwise, the selected option will be displayed on the Browser Remote screen and applied to the camcorder; you do not need to perform the rest of the procedure.

3 Press [5500K] and then selected the desired value from the list.
- The selected value will be displayed on the Browser Remote screen and applied on the camcorder.

To set custom white balance ([1] and [2])

2 Point the camcorder at a gray card or white object so it fills the whole screen.

3 Select [1] or [2].

4 Press [].
- During the procedure, [1] or [2] will flash quickly. When it stops flashing, the procedure is completed and the setting will be applied on the camcorder.

Using Looks

The camcorder can shoot using looks—settings that affect the image-related characteristics of the picture. The camcorder has several pre-installed looks available and you can even create your own user-defined look based on one of the pre-installed looks. This function is not available when the shooting mode is set to AUTO or SCN.

Operating modes: MXF MP4 4K HD

Selecting a Pre-installed Look

For looks other than [5 Canon Log], you can tweak the picture after selecting an option by adjusting the sharpness, contrast and color depth.

1 Touch [FUNC.] and then touch 1 [Looks] (in mode) or S [Looks] (in mode).

2 Select the desired option and then touch [✕].

- The selected icon will appear on the left side of the screen.
- For settings other than [5 Canon Log], you can adjust the settings with the procedure below before touching [✕].

Options (for clips)

[1 Standard]:	Standard profile for general video shooting situations.
[2 EOS Std.]:	Reproduces the vivid, sharp and crisp picture that is found on EOS digital SLR cameras using the standard picture style.
[3 Wide DR]:	Applies a gamma curve with a wide latitude and colors appropriate for the gamma curve.
[4 Cinema EOS Std.]:	Reproduces the picture found on Cinema EOS cameras.
[5 Canon Log]:	Creates a picture with wide dynamic range that is suitable for processing in post-production.
[1 User Setting 1], [2 User Setting 2]:	Allows you to create a customized look. Start with one of the pre-installed looks and adjust the settings as necessary.

Options (for photos)

[S Standard]:	Standard profile for general photo shooting situations.
[P Portrait]:	Appropriate for taking photos of people, as this look brings out a sense of vitality in skin tones.
[L Landscape]:	Makes colors in the landscape appear more vivid.
[N Neutral]:	The details of the subject are emphasized, which helps create an image that is suitable for editing later.
[Se Sepia]:	Allows you to take a sepia-toned photo.
[M Monochrome]:	Allows you to take a black & white photo.
[1 User Setting 1], [2 User Setting 2]:	Allows you to create a customized look. Start with one of the pre-installed looks and adjust the settings as necessary.

Adjusting the Settings of a Pre-installed Look

1 Touch [ ].

2 Adjust the desired setting by touching [-] or [+].

- [Sharpness]: 0 (low sharpness) to 7 (high sharpness)
  [Contrast][1]: -4 (low contrast) to +4 (high contrast)
  [Color Depth][2]: -4 (shallower colors) to +4 (richer colors)

[1] Not available for [3 Wide DR].

[2] Not available for [Se Sepia] and [M Monochrome].

Creating a User-defined Look

You can create your user-defined looks based on one of the pre-installed looks. The camcorder can store two user-defined looks for clips and two for photos.

1 Touch [FUNC.] and then touch 1 [Looks].

2 Select which user-defined setting icon to use.

- Select [User Setting 1] or [User Setting 2] for clips and [User Setting 1] or [User Setting 2] for photos.

3 Touch and then touch [Standard].

4 Select the look that will be the basis of the user-defined look.

- The settings for [5 Canon Log] cannot be adjusted.

5 Touch [Yes] and then touch [OK].

6 Adjust the settings as described in the previous section.

7 Touch [✕].

Zooming

You can operate the zoom (10x optical zoom) using the zoom ring on the lens.

Operating modes: MXF MP4 4K HD

Turn the zoom ring to zoom in and out.

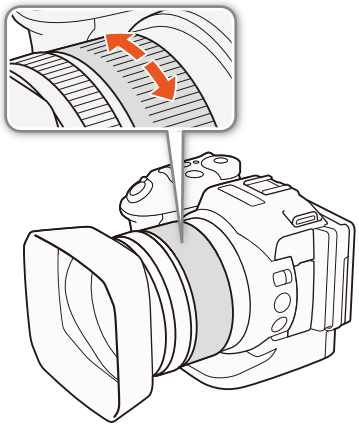

NOTES

- If you turn the zoom ring too quickly, the camcorder may not be able to focus immediately. In such case, the camcorder will focus after you finish turning the ring.
- If you set an assignable button to [Digital Tele-conv.] (99), you can press the button to activate the digital tele-converter. Alternatively, if you customize the FUNC. menu to include [Digital Tele-conv.] (98), you can activate the digital tele-converter from the FUNC. menu. The digital tele-converter allows you to digitally increase the focal length of the camcorder by a factor of approx. 2. Note that the image is digitally processed so the image will deteriorate throughout the zoom range.

Adjusting the Focus

The camcorder offers 3 ways to focus. When you use manual focus, you can use the focus assistance functions, peaking and magnification, to help you focus more accurately.

Autofocus (AF): The camcorder continuously adjusts the focus automatically. You can also use the focus ring (with no physical stops).

Manual focus (MF): Adjust the focus manually using the focus ring, the FUNC. menu or remotely, using the Browser Remote application.

Push AF: While using MF, you can have the camcorder switch temporarily to AF mode as long as you hold the PUSH AF button pressed down.

Autofocus (AF) Mode

The camcorder uses the TTL autofocus system and continuously adjusts the focus on the subject in the center of the screen. The focusing range is 8 cm (at full wide-angle, measured from the front of the lens barrel) to ∞. Even during autofocus mode, you can turn the focus ring to focus manually. When you stop turning the ring, the camcorder returns to autofocus mode. This is useful in situations such as when focusing on a subject on the other side of a window.

Operating modes:

MXF MP4 | 4K HD

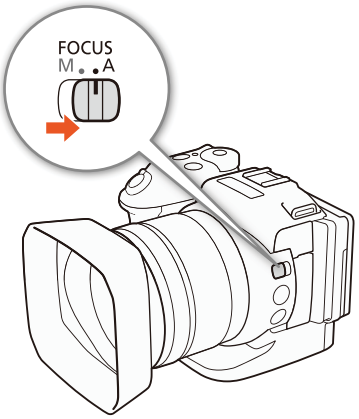

Set the FOCUS switch to A.

- AF appears on the left side of the screen.

Using Focus Priority

You can select the autofocus method used by the camcorder when taking a photo. This will also determine what AF frames are displayed when taking a photo.

Operating modes:

MXF MP4 | 4K HD

1 Touch [FUNC.] and then touch [Focus Priority].

2 Select the desired option and then touch [✕].

Options

[Off]: No AF frame will appear and the photo will be recorded immediately.

[AiAF]: One or more AF frames out of the nine available frames are automatically selected and the focus is fixed on them.

[Center]: A single focusing frame appears in the center of the screen and the focus is automatically fixed on the subject in the frame. While keeping the focus on the subject, you can recompose the shot.

Remote Operation Using Browser Remote

After completing the necessary preparations (📖 127), you can change the focus mode remotely from a connected device using the Browser Remote application. You can use the application to change the focus mode regardless of the position of the camcorder's FOCUS switch.

If the camcorder is set to manual focus mode, press [MF] on the Browser Remote screen.

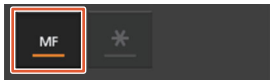

- The orange line in the button will turn gray and the camcorder will change to autofocus mode.
- Press [MF] again to return the camcorder to manual focus mode.

NOTES

- When recording in bright surroundings, the camcorder closes down the aperture. This may cause the picture to appear blurred and is more noticeable toward the wide-angle end of the zoom range. In such case, turn on the ND filter (📖 136).
- Autofocus takes longer to focus when the frame rate is set to 25.00P than when it is set to 50.00P or 50.00i.
- When recording under dark conditions, the focusing range narrows and the picture may appear blurred.
- You can use the [Camera Setup] ➤ [2] ➤ [AF Speed] setting to select the speed at which the focus is adjusted during autofocus. However, the effect on the adjustment speed lessens for slower shutter speeds.
- When drive mode (📖 41) is set to [AF AF Continuous], focus priority will automatically be set to [Center] and cannot be changed.
- When the shooting mode is set to SCN and [Fireworks] is selected, focus priority will automatically be set to [Off] and cannot be changed.
- When the shooting mode is set to AUTO, focus priority will automatically be set to [AiAF AiAF] and cannot be changed.
- When you are using face detection & tracking with focus priority, the camcorder will focus on a face that has been detected.
- When the shutter speed is slower than 1/8 in autofocus mode, the camcorder will not focus on the subject even when you press the PHOTO button halfway. In such case, the AF frame and icon will appear in yellow.
- Autofocus (including Push AF) may not work well on the following subjects or in the following cases. In such case, focus manually.
  - Reflective surfaces
  - Subjects with low contrast or without vertical lines
  - Fast moving subjects
  - Through dirty or wet windows
  - Night scenes

Manual Focus (MF)

You can adjust the focus using the focus ring on the lens or through the FUNC. menu.

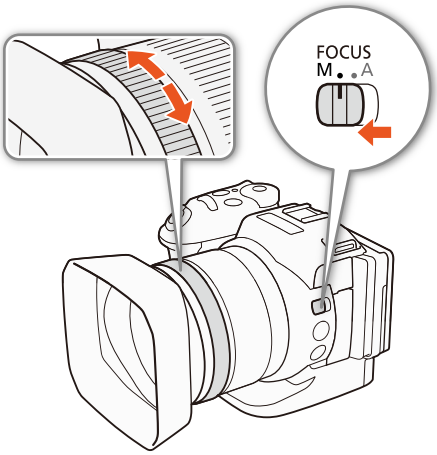

Operating modes:

MXF MP4 | 4K HD

Using the Focus Ring

1 Set the FOCUS switch to M.
- MF appears on the left side of the screen.

2 Turn the focus ring on the lens to adjust the focus.
- The focusing speed will depend on how fast you turn the ring.

NOTES
- You can change the direction of the adjustment and the sensitivity of the response of the focus ring using the [Focus Ring Direction] and [Focus Ring Response] settings (136).

Using the FUNC. Menu

You must first add [Focus] to the right side of the FUNC. menu before adjusting the focus. If you have already done so, start from the second procedure, *Adjusting the Focus*.

Preparation

1 Press the MENU button.

2 Open the [Customize FUNC. Menu] screen.
[System Setup] [3] [Customize FUNC. Menu] (in mode) or [Customize FUNC. Menu] (in mode)

3 From the right side of the screen, select the function to remove from the right side of the FUNC. menu.

4 From the bottom of the screen, select [Focus].

5 Touch [✕].

[System Setup]

[3]

[Customize FUNC. Menu] (in mode) or [Customize FUNC. Menu] (in mode)

Adjusting the Focus

1 Touch [FUNC.] and then touch [Focus].

2 Touch a subject that appears inside the white frame.
- The mark will flash on the selected subject or area and the camcorder will automatically focus where the mark is. After that, the camcorder will switch to MF mode.

Remote Operation Using Browser Remote

After completing the necessary preparations (📖 127), you can adjust the focus remotely from a connected device using the Browser Remote application.

1 If the camcorder is set to AF mode, touch [MF] on the Browser Remote screen.
- The gray line in the button will turn orange and the camcorder will change to manual focus mode.

2 Press one of the [FOCUS] controls to adjust the focus as necessary.
- Press one of the controls on the [NEAR] side to focus closer or one of the controls on the [FAR] side to focus farther away.
- There are three levels of adjustment - [‹]/[›] is the smallest and [⋘]/[⋙] the largest.

NOTES

- **Using the subject distance display on the screen:**
  - When you use the focus ring, the approximate subject distance is displayed for a few seconds.
  - Use the subject distance display as an estimate.
  - [∞] indicates infinity focus.
  - You can change the units of distance between meters and feet using the [System Setup] ❯ [4] (in mode) or [3] (in mode) ❯ [Distance Units] setting.
- If you operate the zoom after focusing, the focus on the subject may be lost.
- If you focus manually and then leave the camcorder with the power turned on, the focus on the subject may be lost after a while. This possible slight shift in focus is a result of the internal temperature rising in the camcorder and lens. Check the focus before resuming shooting.

Using the Focus Assistance Functions

In order to focus more accurately, you can use two focus assistance functions – peaking, which creates a clearer contrast by emphasizing the outlines of the subject, and magnification, which enlarges the image on the screen. You can use both functions simultaneously for greater effect.

Operating modes: MXF MP4 | 4K HD

Peaking

When peaking is activated, the edges of objects in focus will be highlighted in red, blue or yellow on the screen. In addition, you can choose to switch the screen to black & white, further emphasizing the edges.

1 Touch [FUNC.] and then touch [Peaking].

2 Touch [PEAK On].
- Peaking is activated and edges are highlighted.
- Touch [] to turn off the peaking effect.

3 To change the peaking settings, touch [⚟].
For the black & white setting: Touch [Off] or [On]
For the peaking color: Touch [Red], [Blue] or [Yellow]

4 Touch [✕].

Magnification

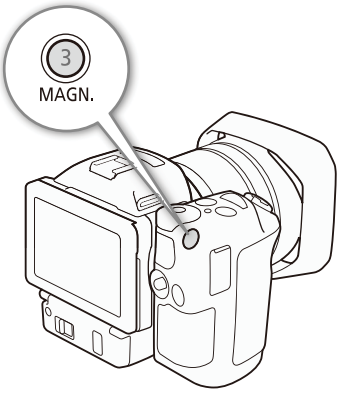

1 Press the MAGN. button.
- Alternatively, you can use the [FUNC.] ➤ MAGN. [Magnification] ➤ [OK] setting.
- MAGN. will appear on the bottom right of the screen and the center of the screen is magnified approximately 2 times*.
- A white frame representing the whole screen area is displayed on the bottom right of the screen. The white rectangle within it represents the approximate part of the image shown magnified.

2 If necessary, use the joystick (▲▼ ◀▶) or drag your finger across the screen to move the white rectangle around and check other parts of the image.

3 Press the MAGN. button again or touch [✕] to cancel the magnification.

* The magnification that appears on the screen differs based on the video configuration.

ⓘ NOTES
- Peaking/Magnification appears only on the camcorder screen. It will not appear on an external monitor connected to the camcorder and will not affect your recordings.
- You cannot use magnification while color bars are displayed on the screen.

Push AF

Operating modes:

MXF MP4 | 4K HD

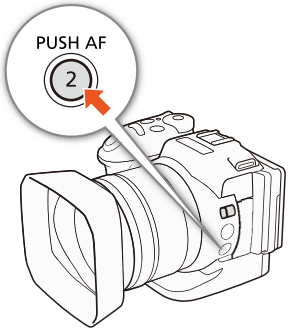

While using manual focus (70), press the PUSH AF button and hold it pressed down.

- Autofocus is temporarily activated as long as you hold the PUSH AF button pressed down.

NOTES

- All the NOTES for the autofocus section (69), apply also to Push AF.

Detecting and Focusing On Faces (Face Detection & Tracking)

The camcorder can detect a person's face during autofocus mode, automatically focus on it, and even track it if the person moves. When there are a number of people in the picture, one person (with the white face detection frame) will be determined to be the main subject and the camcorder will focus on that person's face. You can also change the person selected as main subject. You must use the touch screen to select the subject.

[Camera Setup] (in mode) or [Camera Setup] (in mode)
[1]
[Face Detection & Tracking]
[ON On]

Operating modes:

MXF MP4 | 4K HD

1 Press the MENU button.

2 Open the [Face Detection & Tracking] submenu.

[Camera Setup] (in mode) or [Camera Setup] (in mode) ➤ [1] ➤ [Face Detection & Tracking]

3 Touch [ON On] and then touch [✕].

- Touch [OFF Off] to turn face detection off.

4 Point the camcorder at the subject.

- If there is more than one person in the picture, the camcorder will automatically select one person it determines is the main subject. The camcorder will indicate the main subject with a white face detection frame and other faces with gray frames.
- If necessary, touch a different face on the touch screen to optimize the camcorder's settings for that person. A white double frame will appear around the subject and track it as it moves. Touch [Cancel] to remove the frame and cancel the tracking.
- Touching somewhere with a color or pattern unique to the subject will make it easier to track. However, if there is another subject in the vicinity that shares similar characteristics to the selected subject, the camcorder may start tracking the incorrect subject. Touch the screen again to select the desired subject.

NOTES

- The camcorder may mistakenly detect the faces of non-human subjects. In such case, turn face detection off.
- When the shooting mode is set to AUTO, face detection & tracking will automatically be set to [ON On] and cannot be changed.
- In certain cases, faces may not be detected correctly. Typical examples include:
  - Faces extremely small, large, dark or bright in relation to the overall picture.
  - Faces that are turned to the side, upside-down, at a diagonal or partially hidden.
- Face detection cannot be used in the following cases:
  - When the shutter speed used is slower than 1/25.
  - When the shooting mode is set to SCN and [Night Scene], [Low Light] or [Fireworks] is selected.
  - When [Slow & Fast Motion] is set to [x1/4].
  - In mode, when drive mode is set to [AF Continuous].
  - When the [Camera Setup] [3] [Rolling Shutter Reduction] setting is set to [ON On].

Image Stabilizer

Use the image stabilizer to compensate for camcorder shake in order to achieve steadier shots. When taking photos, you can turn image stabilization on and off. When recording clips, there are 3 methods of image stabilization; select the method that best suits your needs.

Standard IS : Standard IS compensates for a lower degree of camcorder shake, such as when shooting while remaining stationary, and is suitable for shooting natural-looking scenes.

Dynamic IS* : Dynamic IS compensates for a higher degree of camcorder shake, such as when shooting while walking, and is more effective as the zoom approaches full wide angle.
* Not available when recording 4K clips, using slow & fast motion recording mode or taking photos.

Powered IS : Powered IS is most effective when you are stationary and zooming in on far subjects using high zoom ratios (the more you approach the telephoto end). This mode is not suitable for tilting and panning shots.

To activate Standard IS or Dynamic IS

Operating modes: MXF MP4 | 4K HD

1 Touch [FUNC.] and then touch [Image Stabilizer].
2 Select the desired option and then touch [✕].
- In mode, select [ON On] to turn on image stabilization.
- Select [Off] to turn off image stabilization, for example, when recording with the camcorder mounted on a tripod.
- The icon of the selected mode will appear on the upper right of the screen.

To activate Powered IS

Operating modes: MXF MP4 | 4K HD

1 Touch [FUNC.] and then touch [Powered IS].
2 Select [On] and then touch [✕].
- The Powered IS icon will appear on the upper right of the screen.
- Select [Off] to return image stabilization to its previous setting.

NOTES
- If you set an assignable button to [Powered IS] (99), you can press the button to turn Powered IS on or off.
- If the degree of camcorder shake is too high, the image stabilizer may not be able to compensate fully.
- When using Dynamic IS, the edges of the picture may be adversely affected (ghosting, artifacts and/or dark areas may appear) when compensating for a high degree of camcorder shake.
- The angle of view when using Dynamic IS differs from the angle of view when using Standard IS or no image stabilization.

Onscreen Markers and Zebra Patterns

Using onscreen markers allows you to make sure your subject is correctly framed. The zebra patterns help you identify areas that are overexposed. The onscreen markers and zebra pattern will not affect your recordings.

Operating modes: MXF MP4 4K HD

Displaying Onscreen Markers

You can display a grid or a horizontal line at the center of the screen. Use the markers, which can be displayed in white or gray, to make sure your subject is framed correctly.

[Camera Setup] (in mode) or [Camera Setup] (in mode)
[2] (in mode) or [1] (in mode)
[Onscreen Markers]
[OFF Off]

1 Press the MENU button.

2 Open the [Onscreen Markers] submenu.
[Camera Setup] (in mode) or [Camera Setup] (in mode) [2] (in mode) or [1] (in mode) [Onscreen Markers]

3 Select the desired option and then touch [✕].

NOTES

- You can turn off most other onscreen displays, leaving only the onscreen markers (47).

Displaying Zebra Patterns

The camcorder has a zebra pattern feature that shows black and white diagonal stripes over areas that are overexposed. The camcorder offers two levels of zebra pattern: With 100%, only areas that will lose detail in the highlight areas will be identified, while 70% will identify also areas that are dangerously close to losing detail.

1 Touch [FUNC.] and then touch [Zebra].

2 Touch [70 70%] or [100 100%] and then touch [✕].
- The zebra pattern will appear on the overexposed areas of the picture.
- Touch [Off] to turn off the zebra pattern.

NOTES

- The zebra pattern will not be output to an external device connected to the HDMI OUT terminal.

Setting the Time Code

In [ ] mode, the camcorder can generate a time code signal and embed it in clips. Additionally, you can superimpose the time code on video output from the HDMI OUT terminal.

Operating modes: [ ] [ ] [ ] [ ] | MXF MP4 | 4K HD

Selecting the Time Code Mode

You can select the camcorder's time code mode.

[Recording Setup] > [2] > [Time Code Mode] > [PRESET Preset]

1 Press the MENU button.

2 Open the [Time Code Mode] submenu.
[Recording Setup] ➤ [2] ➤ [Time Code Mode]

3 Select the desired option and then touch [✕].

Options

[PRESET Preset]: The time code starts from an initial value you can select in advance. The default initial time code is 00:00:00:00. When you select this option, select the time code's initial value and the time code running mode by following the procedures below.

[REGEN. Regen.]: The camcorder will read the selected recording media and the time code will continue from the last recorded time code on the recording media. The time code runs only while recording so clips recorded consecutively on the same recording media will have continuous time codes.

Setting the Time Code Running Mode

If you set the time code mode to [PRESET Preset], you can set the time code's running mode.

[Recording Setup] > [2] > [Time Code Running Mode] > [REC RUN Rec Run]

1 Press the MENU button.

2 Open the [Time Code Running Mode] submenu.
[Recording Setup] ➤ [2] ➤ [Time Code Running Mode]

3 Select the desired option and then touch [✕].

Options

[REC RUN Rec Run]: The time code runs only while recording so clips recorded consecutively on the same recording media will have continuous time codes.

[FREE RUN Free Run]: The time code starts running the moment you touch [✕] and keeps running regardless of the camcorder's operation.

Setting the Time Code's Initial Value

[Recording Setup]
[2]
[Initial Time Code]

If you set the time code mode to [PRESET Preset], you can set the initial value of the time code.

1 Press the MENU button.

2 Open the [Initial Time Code] screen.
[Recording Setup] ➤ [2] ➤ [Initial Time Code]
- The time code setting screen appears with an orange selection frame indicating the hours.

3 Touch [▲] or [▼] to set the hours and then touch the next field to set the minutes.

4 Change the rest of the fields (minutes, seconds, frame) in the same way.
- Touch [Cancel] to close the screen without setting the time code.
- Touch [Reset] to reset the time code. If the running mode is set to [FREE RUN Free Run], the time code will start running immediately after the time code is reset.

5 Touch [OK] and then touch [✕].
- If the running mode is set to [FREE RUN Free Run], the time code will start running from the selected time code the moment you touch [OK].

NOTES

- The frames value of the time code runs from 0 to 24.
- When you are using slow & fast motion recording mode, you cannot select the [FREE RUN Free Run] running mode. Conversely, when you are using pre-recording mode, [FREE RUN Free Run] is set automatically and cannot be changed.
- When you are using the [FREE RUN Free Run] running mode, the time code will continue running as long as the built-in rechargeable lithium battery is charged, even if you disconnect all other power sources. However, this is less accurate than when the camcorder is on.

User Bit

The user bit display can be selected from the date or the time of recording, or an identification code consisting of 8 characters in the hexadecimal system. There are sixteen possible characters: the numbers 0 to 9 and the letters A to F.
In addition to being recorded with clips, the user bit information can be output along with the video signal output from the HDMI OUT terminal.

Operating modes: MXF MP4 4K HD

Setting the User Bit

[Recording Setup] ▽ [2] ▽ [User Bit Type] ▽ [SET Setting]

1 Press the MENU button.

2 Open the [User Bit Type] submenu.
[Recording Setup] ➤ [2] ➤ [User Bit Type]

3 Select the desired option.
- Select [SET Setting] to set your own identification code, [TIME Time] to use the time as user bit, or [DATE Date] to use the date as the user bit.
- If you selected [TIME Time] or [DATE Date], touch [✕]. You do not need to perform the rest of the procedure. If you selected [SET Setting], continue the procedure to set the identification code.

4 Touch [▲] or [▼] to set the first character and then touch the next field to set the next digit.
- Change the rest of the characters in the same way.
- Touch [Cancel] to close the screen without setting the user bit.

5 Touch [OK] and then touch [✕].

User Bit Output

The user bit is output from the HDMI OUT terminal in the selected type.

Recording Audio

This camcorder features 2-channel linear PCM audio recording and playback with a sampling frequency of 48 kHz. You can record audio using the built-in stereo microphone or an external microphone connected to the MIC terminal.
Audio is not recorded during slow & fast motion recording mode.

Operating modes: MXF MP4 | 4K HD

Using Commercially Available Microphones

To the MIC terminal you can attach a commercially available condenser microphone with its own power supply and a ∅ 3.5 mm stereo mini plug. The audio recording level for the external microphone will differ from that of the built-in microphone.

Connect the external microphone to the MIC terminal.

NOTES

- An external microphone may pick up noise while Wi-Fi functions are in use. Keep a distance between the camcorder and microphone.

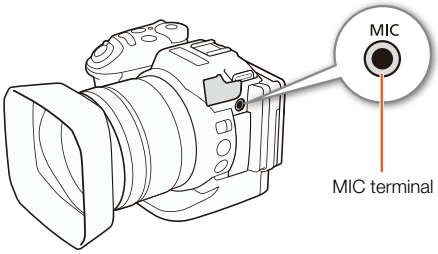

Audio Scenes (Built-in Microphone)

You can have the camcorder optimize the audio settings of the built-in microphone by selecting the audio scene that matches your surroundings. This will greatly enhance the sense of “being there”.

1 Touch [FUNC.] and then touch [Audio Scene].

2 Select the desired option and then touch [✕].

Options

[Standard]:	To record most general situations. The camcorder records with standard settings.
[Music]:	To vibrantly record music performances and singing indoors.
[Festival]:	Optimized for recording music outdoors more naturally. Ideal for outdoor events with music.
[Speech]:	Best for recording human voices and dialog.
[Meeting]:	To record people talking while keeping each voice separate, allowing viewers to feel as if they were there.
[Forest and Birds]:	To record birds and scenes in forests. The camcorder clearly captures sound as it spreads.
[Noise Suppression]:	To record scenes while reducing noise from wind, passing vehicles and similar ambient sound. Ideal for recording at the beach or in places with a lot of noise.
[Custom Setting]:	Allows you to adjust the audio settings to your liking. You can adjust the following settings in the [Audio Setup] menu: [Built-in Mic Wind Screen], [Built-in Mic Att.], [Built-in Mic Freq. Response], [Built-in Mic Directionality], [Audio Limiter] and [Audio Compressor].

Settings for each audio scene

	[STD Standard]	[Music]	[Festival]	[Speech]	[Meeting]	[Forests and Birds]	[Noise Suppression]	[C Custom Setting]
[Mic level]	[M Manual]: 70	[M Manual]: 70	[M Manual]: 70	[M Manual]: 86	[M Manual]: 94	[M Manual]: 80	[M Manual]: 70	Selected by user (□ 81)
[Built-in Mic Wind Screen]	[H Auto (High)]	[L Auto (Low)]	[L Auto (Low)]	[H Auto (High)]	[H Auto (High)]	[H Auto (High)]	[H Auto (High)]	Selected by user (□ 82)
[Built-in Mic Att.]	[A Automatic]	[A Automatic]	[A Automatic]	[A Automatic]	[A Automatic]	[A Automatic]	[A Automatic]	Selected by user (□ 83)
[Built-in Mic Freq. Response]	[NORM Normal]	[LHB Boost HF+LF Range]	[NORM Normal]	[MB Boost MF Range]	[MB Boost MF Range]	[LC Low Cut Filter]	[LC Low Cut Filter]	Selected by user (□ 83)
[Built-in Mic Directionality]	[NORM Normal]	[2ch WIDE Wide]	[2ch WIDE Wide]	[2ch MONO Monaural]	[2ch WIDE Wide]	[2ch WIDE Wide]	[2ch MONO Monaural]	Selected by user (□ 84)
[Audio Limiter]	[ON On]	[ON On]	[ON On]	[ON On]	[ON On]	[ON On]	[ON On]	Selected by user (□ 85)
[Audio Compressor]	[L Low]	[L Low]	[L Low]	[OFF Off]	[H High]	[L Low]	[OFF Off]	Selected by user (□ 86)

NOTES

- [C Custom Setting] is not available when the shooting mode is set to AUTO. After setting [Audio Scene] to [C Custom Setting], if the shooting mode is then set to AUTO, this setting will change to [STD Standard].
- To reproduce louder and quieter sounds in music more faithfully, we recommend that you first adjust the audio recording level (refer to the following section). To reproduce the linearity of the music even more faithfully, we recommend that you select the [C Custom Setting] audio scene and adjust the audio settings to match those of the [Music] audio scene except set [Audio Compressor] to [OFF Off].

Audio Recording Level

You can adjust the audio recording level of the built-in microphone or an external microphone connected to the MIC terminal.

1 Touch [FUNC.] and then touch [A] [Mic Level].

2 Touch [M] to set the audio recording level to manual.

- Touch [A] instead to return the camcorder to automatic audio recording level.

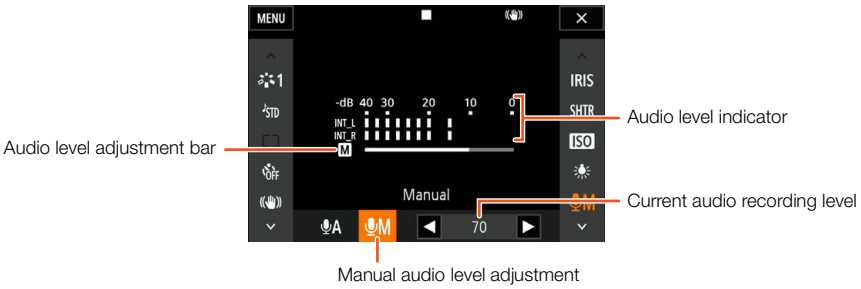

3 Touch [◀]/[▶] to adjust the audio recording level as necessary and then touch [✕].

- As a guideline, adjust the audio recording level so that the audio level meter will go to the right of the -10 dB mark only occasionally.

NOTES

- When the audio level meter reaches the red point (0 dB), the sound may be distorted.
- We recommend using headphones to check the sound level while adjusting the audio recording level or when the microphone attenuator is activated.

Wind Screen (Built-in Microphone)

The camcorder automatically reduces the background sound of wind when recording outdoors. You can select from two levels or turn off the auto wind screen.

[♪)) Audio Setup] ▸ [1] ▸ [Built-in Mic Wind Screen] ▸ [H Auto (High)]

1 Make sure ♪STD [Audio Scene] is set to [♪c Custom Setting] (📖 80).

2 Press the MENU button.

3 Open the [Built-in Mic Wind Screen] submenu.
[♪)) Audio Setup] ▸ [1] ▸ [Built-in Mic Wind Screen]

4 Select the desired option and then touch [✕].

Options

[H Auto (High)]:	The camcorder will reduce a large amount of noise from the wind. Low-frequency sounds will also be reduced.
[L Auto (Low) Low/🎤]:	The camcorder will reduce a small amount of noise from the wind. A small amount of low-frequency sounds will also be reduced.
[OFF Off OFF/🎤]:	The built-in microphone's wind screen will be deactivated at all times.

NOTES

- Some low-frequency sounds will be suppressed along with the sound of wind. When recording in surroundings unaffected by wind or if you want to record low-frequency sounds, we recommend setting [Built-in Mic Wind Screen] to [OFF Off OFF/🎤].

Microphone Attenuator (Built-in Microphone)

[♪)) Audio Setup] ▽ [1] ▽ [Built-in Mic Att.] ▽ [A Automatic]

You can activate the microphone attenuator (20 dB) for the built-in microphone to prevent audio from being distorted if the audio level is too high.

1 Make sure ♪STD [Audio Scene] is set to [♪c Custom Setting] (📖 80).

2 Press the MENU button.

3 Open the [Built-in Mic Att.] submenu.
[♪)) Audio Setup] ➤ [1] ➤ [Built-in Mic Att.]

4 Select the desired option and then touch [✕].

Options

[A Automatic]: The camcorder will automatically activate the built-in microphone attenuator as necessary for optimal audio recording levels so high audio levels will not be distorted.

[ON On]: The built-in microphone attenuator will be activated at all times to reproduce more faithfully the sound dynamics. When you select this option, ATT will appear on the screen.

[OFF Off]: The built-in microphone attenuator will be deactivated at all times. When you select this option, A OFF will appear on the screen.

Audio Equalizer (Built-in Microphone)

[♪)) Audio Setup] ▽ [1] ▽ [Built-in Mic Freq. Response] ▽ [NORM Normal]

You can use the audio equalizer to adjust sound levels by specifically targeting one of the available frequency ranges.

1 Make sure ♪STD [Audio Scene] is set to [♪c Custom Setting] (📖 80).

2 Press the MENU button.

3 Open the [Built-in Mic Freq. Response] submenu.
[♪)) Audio Setup] ➤ [1] ➤ [Built-in Mic Freq. Response]

4 Select the desired option and then touch [✕].

Options

[NORM Normal]: Appropriate for balanced sound under most normal recording conditions.

[LB Boost LF Range]: Accentuates the low-frequency range for more powerful sound.

[LC Low Cut Filter]: Filters the low-frequency range to reduce the noise of blowing wind, a car's engine and similar ambient sounds.

[MB Boost MF Range]: Best for recording human voices and dialog.

[LHB Boost HF+LF Range]: Best, for example, for recording live music and clearly capture the special sound characteristics of a variety of instruments.

Microphone Directionality (Built-in Microphone)

[♪)) Audio Setup] ▽ [1] ▽ [Built-in Mic Directionality] ▽ [NORM Normal]

You can change the directionality of the built-in microphone to have more control over how sound is recorded.

1 Make sure ♪STD [Audio Scene] is set to [♪c Custom Setting] (📖 80).

2 Press the MENU button.

3 Open the [Built-in Mic Directionality] submenu.
[♪)) Audio Setup] ➤ [1] ➤ [Built-in Mic Directionality]

4 Select the desired option and then touch [✕].

Options

[2ch MONO Monaural]: Mono recording that emphasizes sound coming from the front of the camcorder/microphone.

[NORM Normal]: Standard stereo recording; a middle point between the [2ch WIDE Wide] and [2ch MONO Monaural] settings in reach.

[2ch WIDE Wide]: Stereo recording of ambient sound over a more extensive area that adds to the sense of presence of clips.

Microphone Attenuator (External Microphone)

[♪)) Audio Setup] ▽ [2] ▽ [MIC Att.] ▽ [A Automatic]

You can activate the microphone attenuator (20 dB) for a microphone connected to the MIC terminal to prevent audio from being distorted if the audio level is too high.

1 Make sure the input of the MIC terminal is set to [MIC Microphone] (📖 85).

2 Press the MENU button.

3 Open the [MIC Att.] submenu.
[♪)) Audio Setup] ➤ [2] ➤ [MIC Att.]

4 Select the desired option and then touch [✕].

Options

[A Automatic]: The camcorder will automatically activate the microphone attenuator as necessary for optimal audio recording levels so high audio levels will not be distorted.

[ON On]: The microphone attenuator will be activated at all times to reproduce more faithfully the sound dynamics. When you select this option, ATT will appear on the screen.

[OFF Off]: The microphone attenuator will be deactivated at all times. When you select this option, A OFF will appear on the screen.

Low Cut Filter (External Microphone)

When you are recording using a microphone connected to the MIC terminal, you can activate the low cut filter to reduce the sound of blowing wind, a car's engine and similar ambient sounds.

[♪)) Audio Setup] ▽ [2] ▽ [MIC Low Cut] ▽ [OFF Off]

1 Make sure the input of the MIC terminal is set to [MIC Microphone] (📖 85).
2 Press the MENU button.
3 Open the [MIC Low Cut] submenu.
[♪)) Audio Setup] ➤ [2] ➤ [MIC Low Cut]
4 Select the desired option and then touch [✕].

Switching the Input

You can select the input signal used by the MIC terminal depending on whether you are using an external microphone or an external audio source, such as an audio player.

[♪)) Audio Setup] ▽ [2] ▽ [MIC Terminal Input] ▽ [MIC Microphone]

1 Press the MENU button.
2 Open the [MIC Terminal Input] submenu.
[♪)) Audio Setup] ➤ [2] ➤ [MIC Terminal Input]
3 Touch [LINE External Audio] or [MIC Microphone] and then touch [✕].

Audio Limiter

The audio limiter will limit the amplitude of audio signals to prevent audio distortions when sudden, loud sounds are picked up by the camcorder. Start the procedure from step 1 for the built-in microphone and step 2 for an external audio source.

[♪)) Audio Setup] ▽ [2] ▽ [Audio Limiter] ▽ [ON On]

1 Make sure ♪STD [Audio Scene] is set to [♪c Custom Setting] (📖 80).
2 Make sure 🎙A [Mic Level] is set to [🎙M] (📖 81).
3 Press the MENU button.
4 Open the [Audio Limiter] submenu.
[♪)) Audio Setup] ➤ [2] ➤ [Audio Limiter]
5 Touch [ON On] and then touch [✕].

Audio Compressor

The audio compressor will adjust the audio levels while maintaining the strength of even louder sounds, which will make listening to the audio easier. Start the procedure from step 1 for the built-in microphone and step 2 for an external audio source.

[♪)) Audio Setup] > [2] > [Audio Compressor] > [L Low]

1 Make sure ♪STD [Audio Scene] is set to [♪c Custom Setting] (📖 80).

2 Press the MENU button.

3 Open the [Audio Compressor] submenu.
[♪)) Audio Setup] ➤ [2] ➤ [Audio Compressor]

4 Select the desired option and then touch [✕].

Options

[H High]: Flattens out audio levels more and is best when recording multiple people talking at varying levels, such as during a meeting.

[L Low]: Keeps the difference between higher and lower audio levels clear and is best when recording situations such as a musical performance. This setting is effective when the audio level meter goes all the way to the right repeatedly.

[OFF Off]: To record scenes that are not mainly people talking or music performances.

Monitoring the Audio with Headphones

You can connect to the 🎧 (headphone) terminal any pair of headphones with a ∅ 3.5 mm stereo mini plug to monitor the recorded audio.

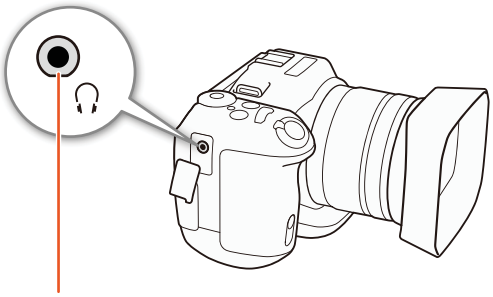

🎧 (headphone) terminal

[♪)) Audio Setup] > [1] > [Headphone Volume] > [8]

1 Press the MENU button.

2 Open the [Headphone Volume] screen.
[♪)) Audio Setup] ➤ [1] ➤ [Headphone Volume]

3 Touch [🎧›]/[🎧))] to adjust the volume and then touch [✕].

- Alternatively, you can drag your finger left/right to move the adjustment bar to the desired setting.

Colors Bars/Audio Reference Signal

You can have the camcorder generate and record color bars and a 1 kHz audio reference signal. The color bars can be output from the HDMI OUT terminal while the audio reference signal can be output from the HDMI OUT and (headphone) terminals.

Operating modes: MXF MP4 4K HD

Recording Color Bars

[Recording Setup] > [3] > [Color Bars] > [Off]

You can choose between EBU color bars and SMPTE color bars. For 4K clips, the color bars will be recorded in 4K (3840x2160) but will be output from the HDMI OUT terminal in HD (1920x1080).

1 Press the MENU button.

2 Open the [Color Bars] submenu.

[Recording Setup] > [3] > [Color Bars]

3 Select the type of color bars and then touch [✕].

- The selected color bars appear on the screen and will be recorded when you press the START/STOP button.
- Select [Off] to turn off the color bars.
- Turning the camcorder off or changing the operating mode to playback mode will deactivate the color bars.

Recording an Audio Reference Signal

[Recording Setup] > [3] > [1 kHz Tone] > [Off]

The camcorder can output a 1 kHz audio reference signal.

1 Press the MENU button.

2 Open the [1 kHz Tone] submenu.

[Recording Setup] > [3] > [1 kHz Tone]

3 Select the desired level and then touch [✕].

- Available levels are -12 dB, -18 dB and -20 dB.
- Select [Off] to turn off the signal.
- The signal is output at the selected level and will be recorded when you press the START/STOP button.

Recording GPS Information (Geotagging)

When the optional GP-E2 GPS Receiver is connected to the camcorder's USB terminal, the camcorder will automatically record the GPS information (time in the UTC standard*, longitude, latitude and altitude) to every recording you make. The GPS information is recorded as part of the clip's metadata and can be used to organize and search recordings using Canon XF Utility (📖 115).

* The time in the UTC standard is recorded for MP4 clips and photos only.

Connecting the GPS Receiver

Turn off the camcorder and the receiver. Connect the receiver to the camcorder's USB terminal using the USB cable*. For details about connecting and using the receiver, refer to the GP-E2 Instruction Manual.

* Supplied with the optional GP-E2 GPS Receiver.

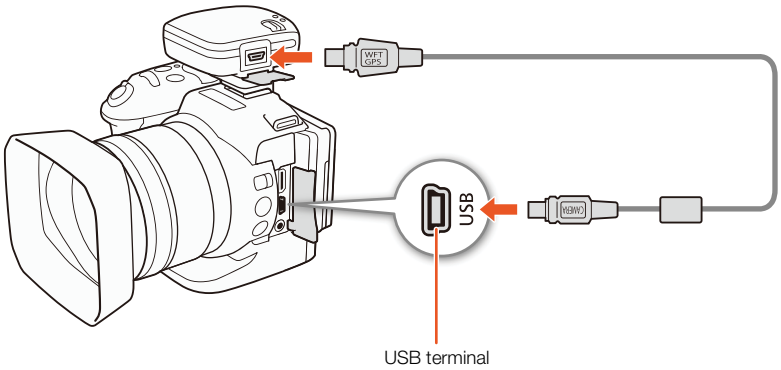

Activating the GPS Receiver

Operating modes: MXF MP4 | 4K HD

1 Turn off the camcorder and receiver, and then connect the receiver to the camcorder.

2 Turn on the camcorder and receiver.

- The icon appears on the right of the screen and will blink as the receiver tries to acquire satellite signals.
- When satellite signals are correctly acquired, the icon will stay continuously on. GPS functions will be activated and clips and photos recorded thereafter will be geotagged.

Displaying GPS Information

You can display GPS information for clips and photos.

[System Setup]
[4] (in mode) or [3] (in mode)
[GPS Information Display]

Operating modes:

MXF MP4 | 4K HD

1 Press the MENU button.
2 Open the [GPS Information Display] screen.
[System Setup] ➤ [4] (in mode) or [3] (in mode) ➤ [GPS Information Display]
3 Touch [✕].
- The GPS information will be displayed.

Adjusting the Date/Time Automatically According to GPS Position

Setting [System Setup] ➤ [4] (in mode) or [3] (in mode) ➤ [GPS Auto Time Setting] to [A Auto Update], you can have the camcorder automatically adjust its date and time settings according to the information received from the GPS signal while an optional GP-E2 GPS Receiver is connected to the camcorder.

- When [System Setup] ➤ [4] (in mode) or [3] (in mode) ➤ [GPS Auto Time Setting] is set to [A Auto Update], settings in the [System Setup] ➤ [1] ➤ [Date/Time] submenu will not be available.
- While the Browser Remote application is in use, the automatic adjustment of the date/time will be deactivated.

IMPORTANT

- In certain countries/regions, the use of GPS may be restricted. Be sure to use the GPS receiver in accordance with local laws and regulations of the country/region where the receiver is used. Be particularly careful when traveling outside of your home country.
- Be careful about using the GPS receiver in places where the use of electronic devices is restricted.
- The GPS information recorded with clips and photos may contain data that can lead others to locate or identify you. Be careful when sharing geotagged recordings with others or when uploading them to the Web.
- Do not leave the GPS receiver near strong electromagnetic fields such as near powerful magnets and motors.

NOTES

- GPS signal reception may take some time after replacing the battery pack or when first turning on the camcorder after a long period without use.
- The camcorder is not compatible with the GPS receiver's digital compass and positioning interval functions. Also, the [Set now] option is not available for the [System Setup] ➤ [4] (in mode) or [3] (in mode) ➤ [GPS Auto Time Setting] setting.
- GPS information will not be recorded with photos captured from a clip.

Slow & Fast Motion Mode

This mode allows you to change the shooting frame rate to achieve a slow motion or fast motion effect during playback. Sound is not recorded in this special recording mode.

Operating modes: MXF MP4 | 4K HD

1 Touch the slow & fast motion button at the bottom right of the screen.
- Alternatively, you can use the [Recording Setup] ➤ [1] ➤ [Slow & Fast Motion] setting.

2 Select the desired slow/fast motion rate and then touch [↩] or [✕].
- Select [OFF Normal Recording] to turn off slow & fast motion recording.
- The slow/fast motion rate appears in the slow & fast motion button.

3 Press the START/STOP button to begin recording.
- The tally lamp illuminates.

4 Press the START/STOP button again to stop recording.

Available slow/fast motion rates

x1/4*	x1/2*	x2	x4	x10	x20	x60	x120	x1200

* Not available when recording 4K clips.

NOTES
- Slow & fast motion recording cannot be used together with pre-recording mode.
- The slow/fast motion rate cannot be changed while recording.
- Clips will have a frame rate of 25.00P.
- Slow & fast motion recording will be deactivated if you change the video configuration.
- During slow & fast motion recording mode, the time code's running mode (77) can be set to [Rec Run] or [Regen.] and the time code advances by the number of frames recorded. If the time code's running mode is set to [Free Run], the running mode will switch to [Rec Run] during slow & fast motion recording mode. When slow & fast motion recording mode is deactivated, the running mode will return to its previous setting.
- **About recording with a slow motion rate of x1/4:**
  - Face detection & tracking will not be available.
  - Clips will have a resolution of 1280x720 and a bit rate of 18 Mbps (for MXF clips) or 4 Mbps (for MP4 clips).

Pre-recording Mode

When pre-recording mode is activated, the camcorder starts recording continuously into a temporary memory of approximately 5 seconds so when you press the START/STOP button, the clip will contain also approximately 5 seconds of video and audio recorded before you pressed the button. Pre-recording is available only for HD clips.

Operating modes: MXF MP4 4K HD

1 Touch [FUNC.] and then touch [Pre REC].

2 Touch [On] to turn on pre-recording mode and then touch [✕].
- appears on the upper right of the screen.
- Touch [Off] to turn off pre-recording mode.

3 Press the START/STOP button to begin recording.
- The tally lamp illuminates.

4 Press the START/STOP button again to stop recording.
- The camcorder records the clip, including approximately 5 seconds of video and audio recorded before the START/STOP button was pressed.
- The tally lamp goes out.

NOTES

- During pre-recording mode, the time code will be recorded with the running mode (77) set to [Free Run], regardless of the previous setting. When the time code is recorded, it will include the 5 seconds before the START/STOP button was pressed. When pre-recording mode is deactivated, the running mode will return to its previous setting.
- Pre-recording cannot be used together with slow & fast motion recording.
- Pre-recording will be deactivated if you open the setup menus or change the look setting (65).

Interval Recording Mode

The camcorder will automatically record photos at a selected interval. This mode is suitable for recording subjects with little movement, such as natural surroundings or plants. Set the interval in advance.

Operating modes: MXF MP4 4K HD

1 Touch the interval recording button at the bottom right of the screen.
- Alternatively, you can use the [Recording Setup] [1] [Interval Recording] setting.

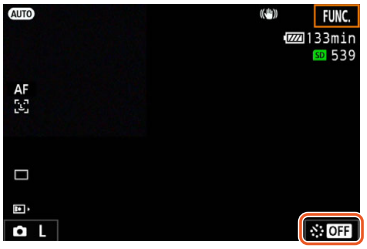

2 Select the desired interval and then touch [ ] or [ ].
- Available intervals are 5 seconds, 10 seconds, 30 seconds, 1 minute and 10 minutes.
- Select [OFF Off] to turn off interval recording.

3 Press the PHOTO button to begin recording.
- Photos are taken at the selected interval. The number of photos taken so far and the time remaining until the next shot are displayed at the top of the screen.

4 Press the PHOTO button again to stop recording.

NOTES
- Interval recording cannot be used together with face detection & tracking, touch focus, exposure lock, touch exposure or AE shift.
- The focus will be locked when interval recording starts. Autofocus will be deactivated while recording.
- Depending on the SD card, it may take some time to save the photos, thereby causing the actual interval between shots to be longer than the selected one.

Self Timer

You can have the camcorder record after a 2-second or 10-second countdown.

Operating modes: MXF MP4 4K HD

1 Touch [FUNC.] and then touch [Self Timer].

2 Select the desired countdown duration and then touch [✕].

- The countdown icon (2 or 10) appears at the top of the screen.

3 Press the START/STOP button to start the countdown and record.

- You can press the START/STOP button again to cancel the countdown.

NOTES

- When using the supplied remote controller, the countdown duration will be determined by the [Self Timer] setting, regardless of the position of the remote controller's delay switch.
- Once the countdown has begun, any of the following actions will cancel the self timer.
  - Turning off the camcorder.
  - Pressing the ▶ button or changing the shooting mode.

Orientation Detection

When orientation detection is turned on, the camcorder will detect if it is turned sideways or upside-down while recording and add that information to the photo's Exif data. Furthermore, when you play back those photos, the camcorder can automatically rotate them so that they are displayed in the correct orientation.

Operating modes: MXF MP4 4K HD

1 Press the MENU button.

2 Open the [Detect Orientation] submenu.

[Recording Setup] ➤ [1] ➤ [Detect Orientation]

3 Touch [ON On] and then touch [✕].

- The orientation icon (see the following table) appears on the bottom left of the screen.

[Recording Setup]
[1]
[Detect Orientation]
[ON On]

Examples of image rotation when [Detect Orientation] is set to [ON On]

Recording		Playback
Camcorder's orientation*	Onscreen icon	
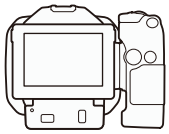		
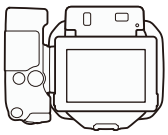		
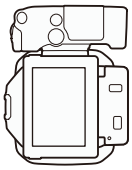		
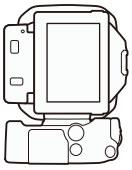		

* As seen from the back of the camcorder, with the lens pointing forward.

Correcting Orientation during Playback

You can have the camcorder display in the correct orientation photos that were recorded using orientation detection.

Operating modes: MXF MP4 4K HD

1 Press the MENU button.

2 Open the [Auto Rotate] submenu.

[▶ Playback Setup] ➤ [1] ➤ [Auto Rotate]

3 Touch [ON On] and then touch [✕].

- If you turn this function off, photos that were recorded with orientation detection will not be displayed in the correct orientation.

[▶ Playback Setup]
[1]
[Auto Rotate]
[ON On]

Using an Optional Speedlite Flash

Using an optional EX-series Speedlite for EOS cameras (270EX II, 320EX, 430EX II, 580EX II, 600EX-RT), you can enjoy flash photography with this camcorder. If you use the optional 320EX Speedlite, you can use its LED light (video light) when recording clips.
For details about using a Speedlite, refer to its instruction manual.

Attaching the Speedlite

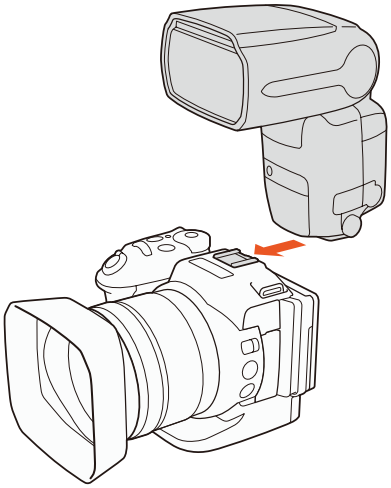

Configuring an Attached Flash

[Camera Setup]
[2]
[Flash]

Depending on the Speedlite used, the following flash settings may be available: flash mode, flash exposure compensation, flash output level, high-speed sync. You can also reset the flash settings.

Operating modes:

MXF MP4 4K HD

1 Press the MENU button.

2 Open the [Flash] submenu.
[Camera Setup] ➤ [2] ➤ [Flash]

To set the flash mode

3 Touch [Flash Mode].

4 Select [A Automatic] or [M Manual] and then touch [↩] to configure other flash settings or [✕] to close the menu.

To set the flash exposure compensation

3 Make sure [Flash Mode] is set to [A Automatic].

4 Touch [Flash Exp. Comp.].

5 Select the desired compensation level and then touch [↩] to configure other flash settings or [✕] to close the menu.

- Available levels range from -3 to +3 stops, in 1/3-stop increments.
- You can also touch [-] and [+] to select the level.

To set the flash output level

3 Make sure [Flash Mode] is set to [M Manual].

4 Touch [Flash Output].

- An adjustment dial will appear.

5 Drag your finger left/right to move the adjustment dial to the desired setting.

- You can also push the joystick left/right to adjust the setting.
- Available levels range from 1/128 power* to 1/1 full power in 1/3-stop increments.
  * 1/64 power for the 270EX II, 320EX and 430EX II Speedlites.

6 Touch [↩] to configure other flash settings or [✕] to close the menu.

To set high-speed sync

3 Touch [High-speed Sync.].

4 Select [ON On] and then touch [↩] to configure other flash settings or [✕] to close the menu.

- Touch [OFF Off] to turn off high-speed sync.
- When this function is set to [ON On], the flash is available for all shutter speeds. When set to [OFF Off], it is available for shutter speeds 1/250 and slower.

To reset the flash settings

3 Touch [Reset Flash Settings].

4 Touch [Yes].

5 When the confirmation screen appears, touch [OK] and then touch [✕].

NOTES

- Depending on the Speedlite, some functions may not be available with this camcorder.
- When using a Speedlite that is not an EX-series Speedlite*, it may not fire at full power, fire correctly or fire at all.
- Using a non-Canon flash (especially high-voltage models) or flash accessories can cause a malfunction of the camcorder or cause the camcorder to not function normally.
- The following actions will reset the flash settings.
  - Attaching or removing the Speedlite.
  - While the Speedlite is attached to the camcorder, turning off the camcorder or Speedlite.

* EX-series Speedlites include the 270EX II, 320EX, 430EX II, 580EX II and 600EX-RT.

Customizing the FUNC. Menu

You can change what functions appear on the right side of the FUNC. menu, making frequently used functions easier to access. By default, the following functions appear on the right side of the FUNC. menu. To replace an icon, follow the procedure below.

Operating modes: MXF MP4 | 4K HD

1 Press the MENU button.

2 Open the [Customize FUNC. Menu] submenu for the current recording mode.

[System Setup] ➤ [3] ➤ [Customize FUNC. Menu] (in mode) or [Customize FUNC. Menu] (in mode)

- The right side of the FUNC. menu can be customized separately for and modes.

3 From the right side of the screen, select the function to remove from the right side of the FUNC. menu.

4 From the bottom of the screen, select the function to add to the right side of the FUNC. menu.

5 Touch [✕].

[System Setup]
▽
[3]
▽
[Customize FUNC. Menu] (in mode) or [Customize FUNC. Menu] (in mode)

Default functions by mode

IRIS [Aperture]	IRIS [Aperture]
SHTR [Shutter Speed]	SHTR [Shutter Speed]
ISO [ISO]	ISO [ISO]
AWB [White Balance]	AWB [White Balance]
[Mic Level]	[Exposure Lock]
[Exposure Lock]	[AE Shift]
[AE Shift]	[Zebra]
[Zebra]	[Peaking]
[Peaking]	[Focus]
[Powered IS]	MAGN. [Magnification]

Assignable Buttons

The camcorder conveniently features assignable buttons to which you can assign various functions. By assigning often-used functions, you can quickly access them with a single press of a button.

Operating modes: MXF MP4 4K HD

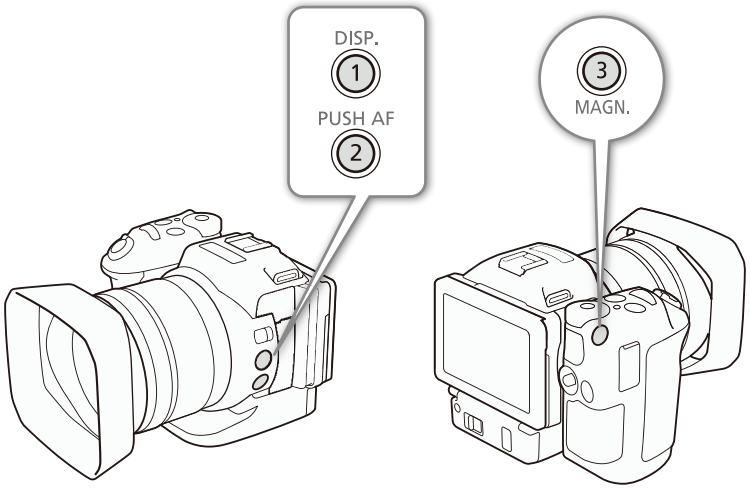

1 Open the submenu of the desired assignable button.

[System Setup] [2] [Assign Button 1], [Assign Button 2] or [Assign Button 3]

- A list of available functions appears.
- The quick reference shows the default settings for each assignable button. The label on the button also indicates the button's default setting.

2 Select the desired function and then touch [✕].

[System Setup]
[2]
[Assign Button 1] [Assign Button 2] [Assign Button 3]
1: [DISP. DISP.] 2: [PUSH AF Push AF] 3: [MAGN. Magnification]

Using an Assignable Button

After you assign a function to one of the assignable buttons, press the button to activate the function.

Assignable Functions

Functions can be set separately depending on the operating mode. Refer to the following table for assignable functions and available modes.

Function name	Description					
[DISP. DISP.]	Switches what onscreen displays are shown. Holding the button pressed down switches the LCD backlight between bright and normal settings. If the LCD backlight set to dim when you press the button, it will first change to the normal setting.	●	●	●	●	140
[PUSH AF Push AF]	Activates Push AF.	●	●	–	–	73
[MAGN. Magnification]	Turns magnification on/off.	●	●	–	–	71
[Zebra]	Activates zebra patterns in the following sequence: 70% → 100% → Off	●	●	–	–	76
[PEAK Peaking]	Turns peaking on/off.	●	●	–	–	71
[2.0x Digital Tele-conv.]	Turns the digital tele-converter on/off.	●	–	–	–	67
[Powered IS]	Turns Powered IS on/off.	●	–	–	–	75
[ND ND Filter]	Turns the ND filter on/off.	●	●	–	–	136
[START STOP Start / Stop]	Starts and stops recording a clip.	●	–	–	–	38
[PHOTO Photo]	Takes a photo.	●	–	–	–	38

Saving and Loading Menu Settings

After you adjust settings in the FUNC. menu and setup menus, you can save those settings on an SD card. You can load those settings at a later date or on another XC10 camcorder so that you can use that camcorder in that same exact way.

Operating modes: MXF MP4 4K HD

Saving Menu Settings to an SD Card

[System Setup] ➤ [4] (in mode) or [3] (in other modes) ➤ [Backup Menu Settings SD]

1 Press the MENU button.

2 Open the [Backup Menu Settings SD] submenu.
[System Setup] ➤ [4] (in mode) or [3] (in other modes) ➤ [Backup Menu Settings SD]

3 Touch [Save] and then touch [Yes].
- The current settings are saved to the SD card.

4 When the confirmation screen appears, touch [OK] and then touch [✕].

Loading Menu Settings from an SD Card

[System Setup] ➤ [4] (in mode) or [3] (in other modes) ➤ [Backup Menu Settings SD]

1 Press the MENU button.

2 Open the [Backup Menu Settings SD] submenu.
[System Setup] ➤ [4] (in mode) or [3] (in other modes) ➤ [Backup Menu Settings SD]

3 Touch [Load] and then touch [Yes].
- After the camcorder's current settings are replaced with the settings saved on the SD card, the screen will turn black momentarily and the camcorder will restart.

NOTES
- Only menu settings from other XC10 camcorders can be used with this camcorder.
- The following settings in the FUNC. menu and setup menus will not be saved.
  - FUNC menu: [Pre REC], [Self Timer], the automatic/manual setting for ✳ [Exposure Lock], MAGN. [Magnification], [Powered IS]
  - Setup menus:
    [Camera Setup] ➤ [2] ➤ [Flash]
    [Recording Setup] ➤ [1] ➤ [Interval Recording]
    [Recording Setup] ➤ [3] ➤ [Color Bars]
    [Wi-Fi Setup] ➤ [1] ➤ [Smartphone Connection]
    [System Setup] ➤ [1] ➤ [Date/Time]
- If the camcorder's menu settings are loaded by another XC10 camcorder with an older firmware version, the [Recording Setup] ➤ [Movie Format] and [Playback Setup] ➤ [Data Code] settings will be returned to default values. Check the camcorders' firmware version.

Playback

This section explains how to play back recordings with the camcorder. For details on playing back recordings using an external monitor, refer to *Connecting to an External Monitor* (📖 114).

Operating modes: MXF MP4 4K HD

Playing Back Recordings

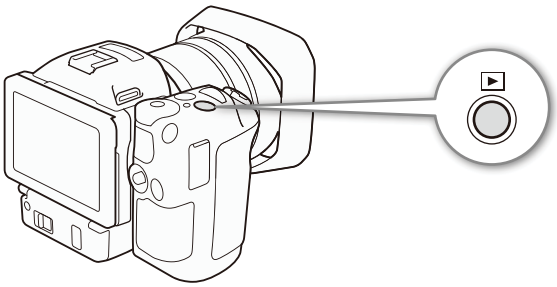

In playback mode, the thumbnails of clips and photos you have recorded are shown in index screens sorted by the type of recording.

1 While the camcorder is turned off, hold the ▶ button pressed down.
- An index screen will appear. To change the index screen, refer to *Changing the Index Screen* (📖 102).
- If you hold the button pressed down again, the camcorder will switch to 🎥 or 📷 mode, depending on the position of the movie/photo switch.

2 Touch the thumbnail of the desired recording to start playback.
- You can also use the joystick to select a recording.
- During playback, you can touch the screen or press the DISP. button to display the playback controls. You can use the touch panel or joystick to operate the playback controls.

Playing back clips

- Playback will start from the selected clip until the end of the last clip in the index screen.
- From the playback controls, touch [❚❚] to pause playback or touch [■] to stop playback and return to the index screen.

Playing back photos

- After the photo appears, drag your finger left/right to browse through the photos one by one.
- You can also use the joystick to browse through the photos.
- From the playback controls, touch [▦] to return to the index screen.

Changing the Index Screen

Clips and photos are sorted into different index screens depending on the type of recording. You can easily switch between the index screens to play back a desired recording.

1 Touch the index screen button.

2 Select the desired index screen.

Summary of index screens

Index screen	Index screen button	Type of recording and recording media
[4K]	[CFast MXF]	4K clips (in MXF format) recorded on the CFast card.
[HD]	[SD MXF]	HD clips (in MXF format) recorded on the SD card.
	[SD MP4]	HD clips (in MP4 format) recorded on the SD card.
[]	[SD]	Photos recorded on the SD card.

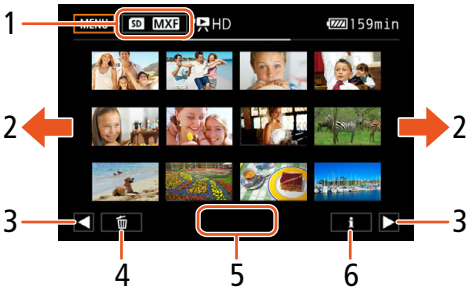

1 Index screen button. Touch to change the index screen.
2 Drag your finger left/right for the next/previous index page.
3 Display the next/previous index page.
4 Delete recordings (110).
5 Folder number (for MP4 clips and photos; 138).
6 Clip information (for clips; 107).

Switching to Playback Mode from [] or [] Mode

When you hold the [▶] button pressed down during [] or [] mode, the camcorder will switch to playback mode and display the last clip or photo recorded, depending on the position of the movie/photo switch. For clips, touch [▶] to start playback. The playback controls are the same as when playing back a recording from the index screen.

IMPORTANT

- Observe the following precautions while the ACCESS indicator is on or flashing in red. Failure to do so may result in permanent data loss.
  - Do not disconnect the power source or turn off the camcorder.
  - Do not open the recording media slot cover.

NOTES

- You may notice brief stops in video or audio playback between clips.
- The following photos may not be displayed correctly.
  - Photos not recorded with this camcorder.
  - Photos created or edited on a computer.
  - Photos whose file names have been changed.

Onscreen Icons and Displays during Playback

Operating modes: MXF MP4 4K HD

Icons that appear during mode

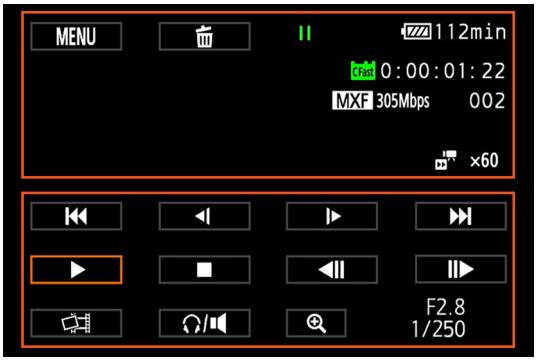

Icons on the top of the screen

Icon/Display	Description	
MENU	Button to open the setup menus.	135
🗑	Delete recording.	110
▶, ❚❚, ◀❚/❚▶, ◀◀/▶▶, ◀❚❚/❚❚▶	Playback operation ▶: playback, ❚❚: playback pause, ◀❚/❚▶: reverse/normal slow playback, ◀◀/▶▶: reverse/normal fast playback, ◀❚❚/❚❚▶: frame reverse/advance	106
CFast, SD 0:00:00:00	Recording media that contains the current recording. Time code	32 77
MXF, MP4	Movie format	49
000 Mbps	Bit rate	49
000	Clip number	–
000-0000	File number	138
x1/4, x1/2 x2, x4, x10, x20, x60, x120, x1200	Slow motion rate of the current clip. Fast motion rate of the current clip.	90

Icons on the bottom of the screen

Icon/Display	Description	📖
⏮/⏭, ⏸, ■, ◀◀/▶▶, ▶, ◀I/I▶, ◀II/II▶	Playback controls during clip playback.	106
	Button to capture a photo from a 4K clip (4K frame grab) or HD clip.	108
	Button to open the volume controls.	107
🔍+, 🔍−	Button to play back an HD-sized clip from a 4K clip.	108
F0.0 0/000 9:00 AM 25 Oct.,2015	Data code	137

Icons that appear during 📷 mode

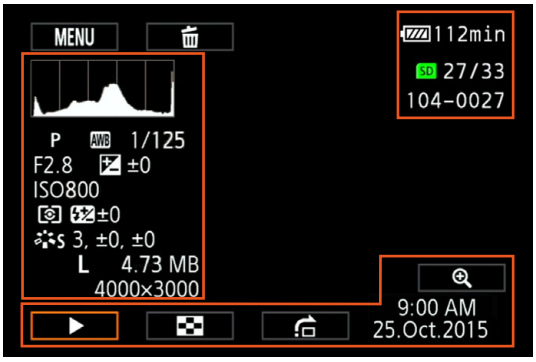

Icons on the left side of the screen

Icon/Display	Description	📖
	Histogram	–
M, Av, Tv, P, AUTO, , , , , , , ,	Shooting mode	51
, , , , , , , K, ,	White balance	63
1/0000	Shutter speed	51, 54
F0.0	Aperture value	51, 53
±0/0	Exposure adjustment value	60
ISO00000	ISO speed	51
, ,	Light metering mode	62
±0	Flash exposure compensation	96
S, P, L, N, Se, M, ,	Looks	65
L, S, 0000x0000	Photo size	41
0.00 MB	File size	–

Icons on the right side of the screen

Icon/Display	Description	📖
SD 00/00	Current photo / Total number of photos	–
000-0000	File number	138

Icons on the bottom of the screen

Icon/Display	Description	📖
⊕, ⊖	Button to magnify the photo.	109
▶, ❚❚, ▦, ⎙	Playback controls during photo playback.	107
9:00 AM 25 Oct.,2015	Data code	137

Playback Controls during Clip Playback

When you play back a clip, touch the screen to display the playback controls to operate the various types of playback. Refer to the following table.

Operating modes: MXF MP4 4K HD

Available playback types
You can perform the following during playback, unless stated otherwise.

Playback type	Operation
Fast playback	Touch [◀◀] or [▶▶]. Repeat to increase the playback speed to approximately 5x → 15x → 60x the normal speed.
Frame advance/reverse	During playback pause, touch [◀❚❚] or [❚❚▶].
Skip to the beginning of the next clip	Touch [▶▶❙].
Skip to the beginning of the current clip	Touch [❙◀◀].
Skip to the previous clip	Touch [❙◀◀] twice.
Return to playback mode	Touch [▶].
Normal/reverse slow playback	Touch [◀❙] or [❙▶]. Repeat to decrease the speed to approximately 1/4x → 1/8x.

NOTES

- There is no audio during any of the playback types listed in the previous table. Also, there is no audio when playing back clips recorded in slow & fast recording.
- During fast/slow playback, you may notice some anomalies (blocky video artifacts, banding, etc.) in the playback picture.
- The speed indicated on the screen is approximate.
- During frame reverse, the interval between frames depends on the video configuration used:
  1 frame (for 4K clips), approx. 0.25 seconds (for HD clips in MXF format with a frame rate of 50.00P) or approx. 0.5 seconds (for other video configurations).
- During reverse slow playback, the interval between frames will be an interval of approx. 0.25 seconds (for MXF clips with a frame rate of 50.00P) or approx. 0.5 seconds (for other video configurations).

Playback Controls during Photo Playback

When you play back a photo, touch the screen to display the playback controls to access playback functions.

Operating modes: MXF MP4 4K HD

Button	Function
[▶]/[❚❚]	Start/stop slideshow playback.
[▦]	Return to the index screen.
[⌂]	Photo jump. Touch [◀] or [▶], or drag your finger along the scroll bar to find the desired photo. Touch [↩] to return to single photo view.
[⊕]/[⊖]	Photo magnification (📖 109).

Adjusting the Volume

During playback, audio will be output from the monaural built-in speaker or from the stereo 🎧 (headphone) terminal. When you connect headphones to the 🎧 (headphone) terminal or connect an external device to the HDMI OUT terminal, the built-in speaker will be muted. The audio signal will also be output through the HDMI OUT terminal.

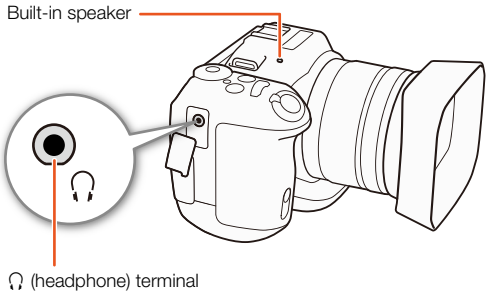

1 During playback, touch the screen to display the playback controls.

2 Touch [🎧/🔈], drag your finger along the [Headphone Volume] or [Speaker Volume] bar, or repeatedly touch the headphone or speaker icon on either end of it to adjust the volume and touch [↩].

Displaying Clip Information

From the index screen, you can display details about clips, such as the bit rate, frame rate and length.

1 Touch [ℹ] and then touch the thumbnail of the desired clip.
- The [Clip Info] screen will appear.
- You can touch [◀]/[▶] to switch to the previous/next clip.

2 Touch [↩] twice.

Playing an HD-sized Clip from a 4K Clip

When playing back a 4K clip, you can select an HD-sized portion of the frame to play back.
Output from the HDMI OUT terminal will be HD during this playback mode.

Operating modes: MXF MP4 | 4K HD

1 Play back the desired 4K clip.

2 During playback or playback pause, touch the screen to display the playback controls and then touch [⊕].
- The screen will be magnified and a white frame representing the whole screen area is displayed on the top left of the screen. The white rectangle within it represents the approximate part of the image being displayed.
- Drag your finger across the screen to move the white rectangle around and select the portion of the image to play back.
- Touch [⊖] to switch back to normal playback mode.

Capturing Photos from 4K Clips (4K Frame Grab) and HD Clips

You can capture a photo from a clip during playback pause. Captured photos are saved on the SD card. The size of the photo will depend on the type of clip it was captured from.

Operating modes: MXF MP4 | 4K HD

1 Play back the clip from which you want to capture the photo.

2 Pause the playback at the point you want to capture (📖 102).
- If you press the PHOTO button halfway during playback, the playback speed will slow to 1/8 normal, allowing you to find the desired point more easily.

3 Press the PHOTO button or touch [📷] to capture a photo.
- 📷▶ SD appears on the bottom right of the screen.
- The ACCESS indicator will flash as the photo is being recorded.

4 Touch [■] to stop playback.

Photo size by clip type

Clip	Photo size
4K clip (4K Frame Grab)	3840x2160
HD clip	1920x1080
HD clip recorded in slow motion at x1/4	1280x720

IMPORTANT

- Observe the following precautions while the ACCESS indicator is on or flashing in red. Failure to do so may result in permanent data loss.
  - Do not disconnect the power source or turn off the camcorder.
  - Do not open the recording media slot cover.

NOTES

- If the LOCK switch on the SD card is set to prevent writing, you will not be able to record a photo. Change the position of the LOCK switch in advance.

Magnifying Photos during Playback

You can magnify photos when you play them back.

Operating modes: MXF MP4 4K HD

1 Play back the photo you want to magnify (102).

2 Touch the screen to display the playback controls.

3 Touch [⊕].

- The center of the photo is magnified approximately 2 times. Touch [⊕] to magnify the image further. Touch [⊖] to reduce the magnification.
- Alternatively, you can pinch your fingers out on the screen to magnify a photo.
- Drag your finger along the magnified area to check other parts of the photo. The white rectangle within the frame represents the approximate location of the portion of the photo that is shown magnified.

4 Touch [↩] to turn off magnification.

- You can also turn off magnification by touching [⊖] repeatedly.

Deleting Recordings

You can delete those clips and photos that you are not interested in keeping. Deleting recordings allows you also to free up space on the recording media.

Operating modes: MXF MP4 4K HD

Deleting Clips and Photos from the Index Screen

1 Open the index screen with the clip or photo you want to delete (📖 102).
- To delete all the MP4 clips or photos recorded on the same date (saved in the same folder), drag your finger left/right until an MP4 clip or photo you want to delete appears.

2 Touch [🗑].

3 Select the desired option.
- When you select [Select], touch on the individual recordings to delete. A checkmark ✓ will appear on the recordings you touch. The total number of selected recordings will appear next to the ☑ icon. You can select up to 100 recordings.
- Touch a selected recording to remove the checkmark. To remove all the checkmarks at once, touch [Remove All] ➤ [Yes].
- After selecting all the desired recordings, touch [OK].

4 Touch [Yes].
- Touch [Stop] to interrupt the operation while it is in progress. Some recordings may be deleted nevertheless.

5 Touch [OK].

Options

[*folder name*]:	Deletes all the MP4 clips or photos recorded on a particular date. The last 4 digits of the folder name indicate the recording date (ex. 1025 = October 25).
[Select]:	Selects individual clips or photos to delete.
[All Clips] or [All Photos]:	Deletes all the clips or photos.

Deleting a Clip During Playback Pause

1 Play back the clip you want to delete (📖 102).

2 Touch the screen to display the playback controls.

3 Delete the clip.

[❚❚] ➤ [🗑] ➤ [Yes]
- The clip is deleted.

4 Touch [OK].

Deleting a Photo during Playback

1 Play back the photo you want to delete (📖 102).

2 Touch the screen to display the playback controls.

3 Delete the photo.

[🗑] ➤ [🗑 Proceed] ➤ [Yes]

- The photo is deleted and the next photo is displayed. You can drag your finger left/right select another photo to delete and then touch [🗑 Proceed] again.

4 Touch [✕].

5 In the playback controls, touch [▦].

IMPORTANT

- Be careful when deleting recordings. Once deleted, they cannot be recovered.
- Save copies of important recordings before deleting them (📖 115, 118).

NOTES

- Photos that were protected with other devices cannot be deleted with this camcorder.
- To delete all recordings and make all recordable space available again you may prefer to initialize the recording media (📖 34).

Video Output Configuration

The video signal output from the HDMI OUT terminal depends on the clip's video configuration, the capability of the external monitor and on various menu settings.

Recording Video Signal Configuration and Video Output Configuration

Refer to the following table for the video output configuration, depending on the recording video configuration used.

Operating modes: MXF MP4 | 4K HD

Recording video configuration		HDMI OUT terminal output
Movie format / Resolution	Frame rate / Bit rate	
MXF 4K (3840x2160)	25.00P / 305 Mbps 25.00P / 205 Mbps	3840x2160 / 25.00P 1920x1080 / 50.00P 1920x1080 / 50.00i 720x576 / 50.00P
MXF HD (1920x1080)	50.00P / 50 Mbps 50.00i / 35 Mbps 25.00P / 35 Mbps	1920x1080 / 50.00P 1920x1080 / 50.00i 720x576 / 50.00P
MP4 HD (1920x1080)	50.00P / 35 Mbps 25.00P / 35 Mbps	1920x1080 / 50.00P 1920x1080 / 50.00i 720x576 / 50.00P

Playback Video Configuration and Video Output Configuration

Refer to the following tables for the video output configuration, depending on the video configuration of the clip being played back. For playback of an HD-sized clip from a 4K clip, refer to the entry for HD.

Operating modes: MXF MP4 4K HD

Playback video configuration		HDMI OUT terminal output
Resolution	Frame rate	
4K (3840x2160)	25.00P	3840x2160 / 25.00P 1920x1080 / 50.00P 1920x1080 / 50.00i 720x576 / 50.00P
HD (1920x1080)	All available frame rates	1920x1080 / 50.00P 1920x1080 / 50.00i 720x576 / 50.00P
Photos	–	3840x2160 / 25.00P 1920x1080 / 50.00P 1920x1080 / 50.00i 720x576 / 50.00P

Connecting to an External Monitor

When you connect the camcorder to an external monitor for recording or playback, connect the camcorder's HDMI™ OUT terminal to the monitor's HDMI input terminal using the supplied HTC-100/S High Speed HDMI Cable.

Connection Diagram

We recommend that you power the camcorder from a power outlet using the compact power adapter.

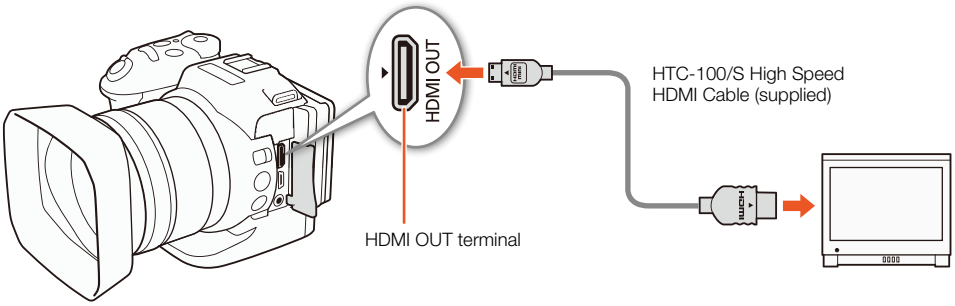

NOTES

- The HDMI OUT terminal is for output only. Do not connect the camcorder to another device's output terminal using the HDMI OUT terminal as this will cause a malfunction.
- When using a commercially available HDMI cable, make sure the HDMI cable is Type A to Type C.
- Audio and video will not be output from the HDMI OUT terminal while Wi-Fi functions are in use.
- Correct operation cannot be guaranteed when connecting the camcorder to DVI monitors.
- Video may not be output correctly depending on the monitor.
- When [Camera Setup] [3] [Rolling Shutter Reduction] is set to [ON On] and recording starts, HDMI output will stop.

Saving Clips to a Computer

The software used to save your clips on a computer depends on the movie format of the clips. Use Canon XF Utility to save MXF clips or one of the Canon XF plugins* to import MXF clips into a non-linear editing (NLE) software. Use Data Import Utility to save MP4 clips (📖 117). When using either software to transfer clips to a computer, make sure to use a compatible card reader.

* Plugins are available for NLE software by Avid and Apple.

Saving MXF Clips

Canon XF Utility and the Canon XF plugins are available as a free download from the following Canon Web site. Refer to the Web site for the system requirements and the latest information about the software and plugins. To download, click on your country/region and follow the onscreen instructions.

www.canon.com/icpd

Canon XF Utility: Browser for transferring MXF clips to a computer and playing back, checking and managing clips. The software also allows you to capture photos from clips.

Plugins for non-linear editing (NLE) software: The plugins allow you to transfer clips from a computer or the recording media (connected via USB reader to a computer) to the NLE software. The following plugins are available.

- Canon XF Plugin for Avid Media Access (Windows or Mac OS)
- Canon XF Plugin for Final Cut Pro X (Mac OS)

For details about using the software, refer to the instruction manual (PDF file) that is installed with the software. Refer to *Viewing the Software Instruction Manuals* (📖 116) for details on accessing the manual.
The following procedures may differ depending on the version of OS you are using. For details see the Help modules of the operating system.

Operating modes: MXF MP4 | 4K HD

Installing Canon XF Utility (Windows)

1 Double-click the file that you downloaded from the Canon Web site to decompress it.
- The file is **xuw*****.zip** for Canon XF Utility or **xpmw*****.zip** for Canon XF Plugin for Avid Media Access. The rest of the explanation refers only to Canon XF Utility but the procedure is similar for the Canon XF plugin.
- The folder **xuw******* will be created that contains the file **xuw***.exe**.

2 Double-click **xuw***.exe**.

3 Follow the onscreen instructions to select your area (continent), country/region and/or language, as necessary.
- Available options will vary depending on your country/region.

4 After the message appears prompting you to exit other applications, exit other applications and then click **OK**.
- The software's license agreement appears.

5 Read the license agreement and click **Yes** to begin the installation.
- If you do not select **Yes**, you cannot install the software.
- When the installation has completed, **Installation has completed successfully** appears.

6 Click **Next** and then click **Finish**.

Uninstalling the Software (Windows)

1 In the Control Panel, open **Add or Remove Programs**.
- A list of installed programs appears.

2 Select the software you wish to uninstall.
- Select Canon XF Utility, Canon XF Plugin for Avid Media Access or Canon XF-AVC Decoder*.
  * Uninstall the decoder only when completely uninstalling the software.

3 Click **Uninstall/Change** and follow the instructions.

Installing Canon XF Utility (Mac OS)

1 Double-click the file that you downloaded from the Canon Web site to decompress it.
- The downloaded file is **xum*****.dmg.gz** for Canon XF Utility, **xpmm*****.dmg.gz** for Canon XF Plugin for Avid Media Access, or **xpfm*****.dmg.gz** for Canon XF Plugin for Final Cut Pro X. The rest of the explanation refers only to Canon XF Utility but the procedure is similar for the Canon XF plugins.
- The file **xum*****.dmg** will be created.

2 Double-click **xum*****.dmg**.
- The **xum*** ** icon will appear on the desktop.

3 Double-click **xum*** ** and then double-click **XUMInstaller**.

4 Follow the onscreen instructions to select your area (continent), country/region and/or language, as necessary.
- Available options will vary depending on your country/region.

5 After the message appears prompting you to exit other applications, exit other applications and then click **OK**.
- The software's license agreement appears.

6 Read the license agreement and click **Yes** to begin the installation.
- If you do not select **Yes**, you cannot install the software.
- When the installation has completed, **Installation has completed successfully** appears.

7 Click **Next** and then click **Finish**.

Uninstalling the Software (Mac OS)

Drag and drop to **Trash** the file or folder corresponding to the item you wish to uninstall.

Software/Plugin/Manual	File/Folder
Canon XF Utility	/Applications/Canon Utilities/Canon XF Utility
Canon XF Plugin for Final Cut Pro X	/Library/Application Support/ProApps/MIO/RADPlugins/CanonXF.RADPlug
Canon XF Plugin for Avid Media Access	/Library/Application Support/Avid/AVX2_Plug-ins/AMA/MVP_MSP_CanonXF.avx
Canon XF-AVC Decoder	/Library/Application Suport/Canon/XFUtility2/mc_bc_dec_avc.framework
Canon XF Plugin Instructions	Applications/Canon Utilities/*Desired plugin name*

Viewing the Software Instruction Manuals

For details on using the software, refer to the instruction manual (PDF file) of each module. The instruction manuals are installed with the software. You can also view the instruction manual by starting the Canon XF Utility and then selecting **Help** > **View Instruction Manual**.

Viewing the Canon XF Utility Instruction Manual
Windows:
From the **Start** menu, select **All Programs** > **Canon Utilities** > **Canon XF Utility** > **Canon XF Utility Instruction Manual**.

Mac OS:

1 From **Applications**, open **Canon Utilities** > **Canon XF Utility** > **Manual**.

2 Open the folder and double-click the PDF file.

Viewing the Plugin Instructions

Windows:
From the **Start** menu, select **All Programs** > **Canon Utilities** > **Canon XF Plugin for Avid Media Access** > **Canon XF Plugin for Avid Media Access Instruction Manual**.

Mac OS:

1 From **Applications**, open **Canon Utilities** > *Desired plugin name* > **Manual**.

2 Open the folder and double-click the PDF file.

Saving MP4 Clips

With the software Data Import Utility, you can do the following:
- Save MP4 clips to a computer.
- Join multiple MP4 clips of a single scene that were split (📖 49) and save them as a single video file.

Before installing the software, access PIXELA's Web site below for the system requirements and latest information on the software.

http://www.pixela.co.jp/oem/canon/e/index_biz.html

Refer to *Installing Data Import Utility* below for the site to download the software. For details about installing and using the software, refer to the instruction manual (PDF file) that is included with the download.

- An Internet connection is required to install the software.

Operating modes: MXF MP4 4K HD

IMPORTANT

- Before saving MP4 clips to your computer with Data Import Utility using an SD card reader or your computer's memory card slot, do not access or manipulate the files on the SD card with other software. Failing to do so may result in not being able to save the files to your computer.

Installing Data Import Utility

Data Import Utility is available as a free download from PIXELA's Web site below.

http://pixela.jp/ediu23_dl

See *Installation* and *System requirements* in the 'Data Import Utility Software Guide' Software Guide (PDF file) for step-by-step installation instructions and system requirements.

- An Internet connection is required to install the software.

Saving Photos to a Computer

Use the CameraWindow software to save your photos on a computer.

Operating modes: MXF MP4 4K HD

Installation

You can download the CameraWindow software (in the CAMCORDER Software package) for free from the following Canon Web site. The site also has the system requirements, latest information about the software, instructions on how to open the software package and how to run the installer. To download and install the software, click on your country/region and follow the onscreen instructions.

www.canon.com/icpd

After you download, follow the onscreen instructions to install the software.

- An Internet connection is required to install the software.
- For Windows users, if a User Account Control dialog box appears, follow the instructions.
- When the screen of the last step is displayed, the software is correctly installed. Click **Finish** to close the installer.

Connecting the Camcorder to a Computer

1 Camcorder: Power the camcorder using the compact power adapter.

2 Camcorder: Open the [📷] index screen (📖 102).

3 Camcorder: Connect the camcorder to the computer using the supplied USB cable.

4 Computer: CameraWindow will start automatically and the main screen will appear.

- Windows: If the AutoPlay dialog box appears instead, click **Downloads Images From Canon Camera** to start the CameraWindow program.
- Mac OS: If it does not start automatically, start the program manually.

5 Computer: In the CameraWindow's main screen, click **Import Images from Camera** and then click **Import Untransferred Images**.

- Photos you have not yet transferred to the computer will be saved.
- Click **Cancel** to interrupt the transfer while it is in progress.
- When the transfer is completed, click **OK** and close CameraWindow.

IMPORTANT

- When the camcorder is connected to a computer:
  - Do not open the recording media slot cover.
  - Do not change or delete any of the camcorder's folders or files directly from the computer as this may result in permanent data loss.
  - Do not set the computer in **Sleep** or **Hibernate** mode (Windows) and do not activate the **Sleep** function (Mac OS).
- If you wish to use the recordings on your computer, make copies of them first. Use the copied files, retaining the originals.

NOTES

- To uninstall CameraWindow:
  - Windows: In the Control Panel, open **Add or Remove Programs**. Select **Canon Utilities CameraWindow DC 8**, click **Uninstall/Change** and follow the instructions.
  - Mac OS: Drag and drop the following folder to the **Trash**.
    /Applications/Canon Utilities/CameraWindow
- Depending on the computer, the software may not work correctly.
- When the camcorder is powered only using the battery pack, the battery's charge on the camcorder's details area of the CameraWindow screen (**Battery Capacity**) will always appear as **Full**, regardless of the actual remaining battery charge.

About the Wi-Fi Functions

This camcorder's Wi-Fi functions use either an infrastructure or camera access point connection, depending on the function. Refer to the following table for a brief summary of the Wi-Fi functions.

Wi-Fi functions and connection types

Function	Description	Wi-Fi connection		📖
		Infrastructure[1]	Camera Access Point[2]	
Browser Remote	Control the camcorder remotely from the Web browser of a connected device.	–	●	127
Playback via Browser	Access the MP4 clips or photos recorded on the SD card in the camcorder from the Web browser of a connected device to play back or save locally.	–	●	131
Media Server	Wirelessly view on a computer the MP4 clips or photos on the camcorder's SD card.	●	–	132

[1] Connection to a Wi-Fi network via an external access point (wireless router, etc.)
[2] Direct connection to one Wi-Fi-enabled device, such as a smartphone, where the camcorder serves as the Wi-Fi access point.

Before using the Wi-Fi functions

- The instructions in this chapter assume you already have a correctly configured and working network, network device(s) and/or Wi-Fi access point. If necessary, refer to the documentation provided with the network devices you want to use.
- Configuring the network settings requires adequate knowledge about configuring and using wireless (Wi-Fi) networks. Canon cannot provide support regarding network configurations.

IMPORTANT

- Canon shall not be liable for any loss of data or damage resulting from incorrect network configuration or settings. Additionally, Canon shall not be liable for any loss or damage caused by the use of Wi-Fi functions.
- Using an unprotected Wi-Fi network can expose your files and data to monitoring by unauthorized third parties. Be aware of the risks involved.

NOTES

- **About the Wi-Fi antenna**: When using the camcorder's Wi-Fi functions, do not cover the Wi-Fi antenna with your hand or other object. Covering it may interfere with wireless signals.
- Do not open the recording media slot cover while using Wi-Fi functions.

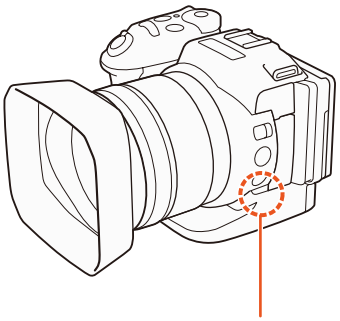

Wireless Connections Using Wi-Fi

The camcorder is Wi-Fi certified and can connect to a Wi-Fi network using an external access point (wireless router) or can itself serve as a Wi-Fi access point. The camcorder can connect to wireless routers (access points) compliant with the 802.11a*/b/g/n protocol and are Wi-Fi certified (bear the logo shown on the right).

The camcorder offers 5 ways to connect to a Wi-Fi network and the method you use will depend on the type and specifications of the access point and network you want to use. Note that using an unprotected Wi-Fi network can expose your data to monitoring by unauthorized third parties. Be aware of the risks involved.

* The 802.11a protocol is not available for camcorders whose identification label contains the camcorder ID "ID0055" and the text "2.4 GHz only" (📖 160).

Operating modes: MXF MP4 | 4K HD

WPS (button): If your wireless router supports Wi-Fi Protected Setup (WPS), setup will be easy and require minimal configuring and no passwords. To check if your wireless router has a WPS button and for details about how to activate the Wi-Fi protected setup, refer to the instruction manual of your wireless router.

WPS (PIN code): Even if your wireless router does not have a dedicated WPS button, it may support WPS using a PIN code instead. For setup using a PIN code, you will need to know in advance how to activate the wireless router's WPS function. For details refer to the instruction manual of your wireless router.

Searching for Access Points: If your access point does not support the WPS function or you cannot activate it, you can have the camcorder search for access points in the area.

Manual Setup: If the access point you want to use has stealth mode activated and it cannot be automatically detected by the camcorder, you can enter all the necessary settings manually. This requires more advanced knowledge of Wi-Fi and network settings.

Camera Access Point: When shooting in a location where there are no access points available, the camcorder can serve as a wireless access point*. Wi-Fi enabled devices will be able to connect to the camcorder directly.

* Limited only to the connection between the camcorder and supported Wi-Fi enabled devices. The functionality is not the same as that of commercially available access points.

Wi-Fi Protected Setup (WPS)

Wi-Fi Protected Setup (WPS) is the easiest way to connect to a Wi-Fi access point. You can do simply by pushing a button (if the access point (wireless router) you want to connect to has a WPS button) or using a PIN code issued by the camcorder.

Wireless Routers with a WPS Button

[Wi-Fi Setup] ▸ [1] ▸ [Access Point Connection]

1 Press the MENU button.

2 Open the [Access Point Connection] screen.
[Wi-Fi Setup] ▸ [1] ▸ [Access Point Connection]

3 Touch [Not Configured] and then touch [WPS: Button].

4 Press and hold the WPS button on the wireless router.

- The length of time required to hold down the WPS button depends on the wireless router. Refer to the instruction manual of your wireless router and make sure the wireless router's WPS function is activated.

5 Within 2 minutes, touch [OK] on the camcorder's screen.
- While the camcorder is attempting to connect to the access point, you can touch [Stop] and then [OK] to interrupt the operation.

6 When the confirmation screen appears, touch [OK] and then touch [✕].

NOTES
- The [WPS: Button] method may not work correctly if there are several active access points in the area. In such case try using [WPS: PIN Code] or [Search for Access Points] (📖 122) instead.

WPS using a PIN code

[Wi-Fi Setup] ▸ [1] ▸ [Access Point Connection]

1 Press the MENU button.

2 Open the [Access Point Connection] screen.
[Wi-Fi Setup] ➤ [1] ➤ [Access Point Connection]

3 Touch [Not Configured] and then touch [WPS: PIN Code].
- After approximately 7 or 8 seconds, the camcorder will generate and display a PIN code.

4 Enter the PIN code from step 3 into the wireless router's WPS (PIN code) setup screen.
- For most wireless routers, you must use a Web browser to access the setup screen.
- For details about how to access your wireless router's settings and activate the Wi-Fi Protected Setup (WPS) using a PIN code, refer to the instruction manual of your wireless router.

5 Within 2 minutes, touch [OK] on the camcorder's screen.
- While the camcorder is attempting to connect to the access point, you can touch [Stop] and then [OK] to interrupt the operation.

6 When the confirmation screen appears, touch [OK] and then touch [✕].

Searching for Access Points

The camcorder will automatically detect access points in the vicinity. After you select the desired access point, you only need to enter the selected network's encryption key (password) to connect the camcorder.

[Wi-Fi Setup] ▸ [1] ▸ [Access Point Connection]

1 Press the MENU button.

2 Open the [Access Point Connection] screen.
[Wi-Fi Setup] ➤ [1] ➤ [Access Point Connection]

3 Touch [Not Configured] and then touch [Search for Access Points].
- The camcorder will search for active access points in your area and display a list of available options.

4 Select the desired access point.

- If the desired access point is not displayed, you can touch [▲] or [▼] to go through the list of detected access points. You can also touch [Search Again] to have the camcorder search for access points again.
- When the network name (SSID) of the desired access point appears, touch [OK].
- If the access point is encrypted (🔒), enter the encryption key (password) with the following procedure. Otherwise, go to step 7 of *Manual Setup* (📖 124) and perform the rest of that procedure.

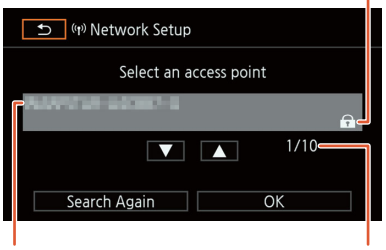

Encrypted Access Points

1 If necessary, select the WEP index key.

- This step is only necessary if the Wi-Fi network's authentication method is set to [WPA] or if the encryption method is set to [WEP].

2 To enter the [Encryption Key] (password), touch [Not configured].

- Enter the password of the selected Wi-Fi network using the keyboard screen (📖 123).

3 When the confirmation screen appears, touch [OK].

ⓘ NOTES

- Valid encryption keys vary depending on the encryption method.

  64-bit WEP encryption: 5 ASCII characters or 10 hexadecimal characters.

  128-bit WEP encryption: 13 ASCII characters or 26 hexadecimal characters.

  AES / TKIP encryption: 8 to 63 ASCII characters or 64 hexadecimal characters.

  * Note: ASCII characters include the numbers 0 to 9, the letters a to z and A to Z and some punctuation marks and special symbols. Hexadecimal characters comprise the numbers 0 to 9 and the letters a to f and A to F.

Using the Virtual Keyboard Screen

The virtual keyboard is displayed on the screen. The illustration below explains the various keys you can use.

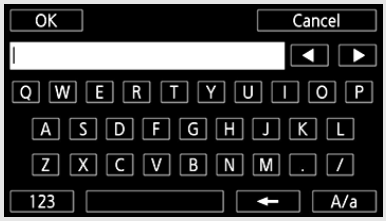

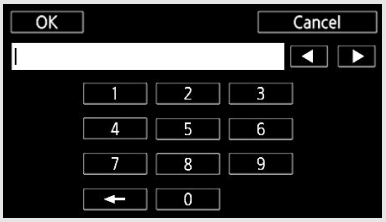

1 Touch the desired keys to type the corresponding character.

- Touch [◀]/[▶] to change the position of the cursor.
- Touch [123] to switch between letters and numbers/special characters.
- Touch [⟵] to delete the character to the cursor's left.
- Touch [A/a] for caps lock. When the numerical keyboard is displayed, [#%?] switches between set 1 and set 2 of special characters.

2 After entering the desired text, touch [OK].

3 Back in the original screen, touch [Next] or [OK] to continue.

Manual Setup

If you prefer, you can enter manually the details of the Wi-Fi network you want to connect to. Follow the instructions on the screen to complete the procedure.
To enter text for the various settings, use the virtual keyboard (📖 123).

[Wi-Fi Setup] ▸ [1] ▸ [Access Point Connection]

1 Press the MENU button.

2 Open the [Access Point Connection] screen.
[Wi-Fi Setup] ▸ [1] ▸ [Access Point Connection]

3 In the access point selection screen, touch [Not configured] and then touch [Manual Setup].

4 In the [SSID] (network name) field, touch [Not configured].
- Enter the SSID (network name) of the selected Wi-Fi network.

5 In the [Authentication/Encryption Method] field, touch [OPEN NONE] and then touch the desired method.
- If you selected [OPEN WEP], the WEP index is 1.
- If you selected [OPEN NONE], skip to step 7.

6 In the [Encryption Key] field, touch [Not configured].
- Enter the encryption key.

7 Touch [Automatic] or [Manual] to select how to obtain the IP address.
- If you selected [Automatic], proceed to step 12.

8 In the [IP Address] field, touch [0.0.0.0]. Touch the first field and touch [▲]/[▼] to change the value. Change the rest of the fields in the same way and then touch [OK].

9 Enter the [Subnet Mask] field in the same way and then touch [Next].

10 Enter the [Default Gateway] field in the same way and then touch [Next].

11 Enter the [Primary DNS Server] and [Secondary DNS Server] fields in the same way and then touch [Next].

12 When the confirmation screen appears, touch [OK] and then touch [✕].

IMPORTANT
- The Wi-Fi functions available and the setup method will vary depending on the specifications and characteristics of the Wi-Fi network you want to use.

Viewing and Changing Wi-Fi Settings

You can view and change Wi-Fi connection settings saved in the camcorder. Because the settings must be changed manually, adequate knowledge about configuring and using Wi-Fi networks is required. If Browser Remote has been activated, deactivate it before performing the following settings.
To enter text for the various settings, use the virtual keyboard (📖 123).

Operating modes: MXF MP4 | 4K HD

To view the smartphone's connection settings

[(•) Wi-Fi Setup] ▸ [1] ▸ [Smartphone Connection]

1 Press the MENU button.

2 Open the [(•) Smartphone Connection] screen.
[(•) Wi-Fi Setup] ▸ [1] ▸ [Smartphone Connection]
- The camcorder's SSID (network name), password and operating frequency will appear.

To change the SSID and password

3 Touch [⇄] next to [Camcorder's Password] and then touch [OK].
- The camcorder will randomly choose a new SSID and password.

4 Touch [OK].

To view the access point's connection settings

[(•) Wi-Fi Setup] ▸ [1] ▸ [Access Point Connection]

1 Press the MENU button.

2 Open the [(•) Access Point Connection] screen.
[(•) Wi-Fi Setup] ▸ [1] ▸ [Access Point Connection]
- The access points' SSID settings saved in the camcorder's memory will appear.
- To add an access point, touch [Not configured] and then perform the procedure in *Wireless Connections Using Wi-Fi* (📖 121). After doing so, the [(•) Wi-Fi Setup] menu will appear.

3 Touch the SSID whose settings you want to view or change.
- The access point's settings will appear. You cannot change the MAC address.
- Touch [▲] and [▼] to view more information.
- To delete the settings, touch [Edit] ▸ [Delete] ▸ [Yes].
- To change the settings, touch [Edit] ▸ [Manual Setup] and then perform the procedure in *Manual Setup* (📖 124).

4 Touch [↩] twice and then touch [✕].

To view the camcorder's MAC address

1 Press the MENU button.

2 Open the [Display MAC Address] screen.

[Wi-Fi Setup] ➤ [1] ➤ [Display MAC Address]

- The camcorder's MAC address will appear.

3 Touch [↩] and then touch [✕].

[Wi-Fi Setup]
[1]
[Display MAC Address]

Browser Remote: Controlling the Camcorder from a Network Device

Using a camera access point connection, in which the camcorder itself acts as an access point, you can connect a device such as a smartphone (such connected devices are hereafter referred to as "network devices"). You can then control the camcorder remotely from the network device's Web browser using the Browser Remote application. Browser Remote lets you monitor the image through live view, record clips and photos, and remotely control the shutter speed, gain and other settings. You can also check the recording media, remaining recording time, time code, etc.

* For details about compatible devices, operating systems, Web browsers, etc., please visit your local Canon Web site.

Operating modes: MXF MP4 | 4K HD

Setting Up Browser Remote

You can set a unique camcorder identification code and designate the port that the Browser Remote application should use when accessing the camcorder through network. The port number (HTTP protocol) used by Browser Remote is usually set to port 80, but you can change it if necessary. The camcorder ID will appear on the Browser Remote screen, making it easy to identify which camcorder the application is controlling in case of a multi-camera shooting setup.

To enter information for various settings, use the virtual keyboard (📖 123).

[Wi-Fi Setup] ▸ [1] ▸ [Browser Connection Settings]

1 Press the MENU button.

2 Open the [Browser Connection Settings] submenu.

[Wi-Fi Setup] ▸ [1] ▸ [Browser Connection Settings]

3 To change the camcorder ID, touch [Camcorder ID]. Enter the desired ID and then touch [OK].

4 To change the port number, touch [80]. Enter a different port number and then touch [OK].

5 Touch [OK] twice and then touch [✕].

NOTES

- During a Wi-Fi connection, it is not possible to change the camcorder's Wi-Fi settings.

Starting Browser Remote

After connecting the network device to the camcorder, you can start the Browser Remote application on the Web browser* of the network device.

* A Web browser that supports JavaScript and is enabled to accept cookies is required.

[Wi-Fi Setup] ▸ [1] ▸ [Browser Remote] ▸ [Off]

Preparations on the Camcorder

1 Press the MENU button.

2 Open the [Browser Remote] submenu.

[Wi-Fi Setup] ▸ [1] ▸ [Browser Remote]

3 Touch [On].

- The URL to enter into the connected network device's Web browser as well as the camcorder's SSID (network name) and password will appear. Before launching the device's Web browser, configure the network device by following the next procedure while referring to the camcorder's screen.

Connecting the Network Device

1 Network device: Activate Wi-Fi in the settings screen.
- Detected networks appear on the screen.

2 Network device: Touch the SSID that matches the one displayed on the camcorder's screen.

3 Network device: Enter the password displayed on the camcorder's screen to establish a connection.
- Entering the password is necessary only the first time you use this function.

4 Network device: Start the Web browser and enter the URL displayed on the camcorder's screen.
- The Browser Remote screen will appear.
- While Browser Remote is correctly connected to the camcorder, the ●●●● above the time code will turn on one by one and then turn off in an endless loop.
- If a camcorder ID has been set, it will appear on the Browser Remote screen while live view is not activated. It will not appear if the camcorder's ID has not been set.
- As long as you do not change the port setting, the URL is always the same so you may find it convenient to bookmark the URL.

5 Camcorder: Touch [✕].
- When the connection has been established, Remote will appear on the screen in white. It will appear in yellow when a network device is not connected.

6 Select the language for Browser Remote.
- Press the [▼] next to the language button and select the desired language from the list. Most buttons and controls emulate physical controls on the camcorder and are labeled in English only, regardless of the language selected.

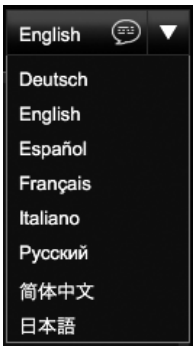

7 Use the Browser Remote controls to operate the camcorder.
- Descriptions of the controls are given in the following pages. Detailed operation is given in each function's reference page.

8 When you have finished using Browser Remote, on the camcorder set [Wi-Fi Setup] ➤ [1] ➤ [Browser Remote] to [Off] and then touch [✕].
- Remote will turn yellow and then disappear from the camcorder's screen and the connection with the application will be terminated.

NOTES

- Depending on the network used and the strength of the Wi-Fi signal, you may notice delays in the refreshing of the live view image and other settings.
- While color bars are displayed on the camcorder, the live view image will not be displayed.

The [Advanced Control] Screen

When using a computer, tablet and other devices with larger screens, the [Advanced Control] screen offers all the controls available for operating the camcorder remotely via Browser Remote. For details, refer to each function's explanation.

When recording clips

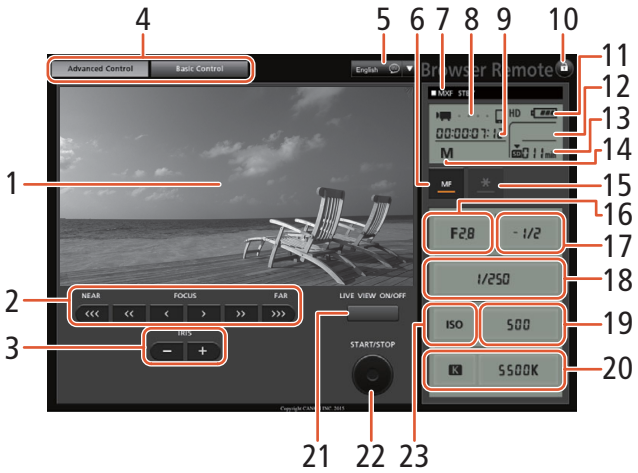

When taking photos

1 Live view screen
2 Focus controls (📖 69)
3 IRIS -/+ buttons (📖 57)
4 Browser Remote screen selection tabs
5 Language selection (📖 128)
6 Focus mode button (📖 69, 71)
7 Recording operation (📖 43)
8 Network connection indicator*
9 Time code* (📖 77)
10 Key lock button (Browser Remote controls only)
11 Approximate remaining battery charge*
12 CFast card status and approximate remaining recording time
13 SD card status and approximate remaining recording time
14 Shooting mode*
15 Exposure lock (📖 60)
16 Aperture controls (📖 57)
17 Exposure adjustment value (📖 60)
18 Shutter speed controls (📖 57)
19 ISO speed/Gain controls (📖 60)
20 White balance controls (📖 64)
21 LIVE VIEW ON/OFF button (📖 42)
22 START/STOP button (📖 42)
23 ISO speed/Gain switch (📖 57)
24 SD card status and available number of photos
25 PHOTO button (📖 42)

* Onscreen display/indication only. The content or value cannot be changed using Browser Remote.

The [Basic Control] Screen

When using a smartphone or other device with a smaller screen, you can use the [Basic Control] screen that offers only the most important shooting controls (START/STOP, PHOTO, live view and focus) but will fit in the screen without scrolling. For details, refer to each function's explanation.

1 Open the [Basic Control] screen.

From the [Advanced Control] screen press the [Basic Control] tab.

Playback via Browser

You can use the Playback via Browser function to access the MP4 clips and photos in the camcorder from the Web browser of a connected network device*. You can then play back your recordings using the Web browser and even save local copies of them on the device.

* Depending on the device, OS, browser and video quality, you may not be able to play back or save recordings. For details, visit your local Canon Web site.

Operating modes: MXF MP4 4K HD

1 Camcorder: Open the desired index screen (102).

2 Camcorder: Press the MENU button.

3 Camcorder: Open the [Playback via Browser] screen.

[Wi-Fi Setup] ➤ [1] ➤ [Playback via Browser]

- The camcorder's SSID (network name) and password will appear. The camcorder is ready to connect with the network device.

[Wi-Fi Setup]
[1]
[Playback via Browser]

4 Network device: Activate Wi-Fi in the settings screen.

- Detected networks appear on the screen.

5 Network device: Touch the SSID that matches the one displayed on the camcorder's screen.

6 Network device: Enter the password displayed on the camcorder's screen to establish a connection.

- Entering the password is necessary only the first time you use this function.
- The camcorder's screen will change and show a URL.

7 Network device: Start the Web browser and enter the URL displayed on the camcorder's screen.

- The Playback via Browser screen will appear.
- The URL is always the same so you may find it convenient to bookmark the URL.

8 Network device: Play back your recordings.

- To change the index screen displayed, touch/click the button on the top left of the screen (SD MP4 or SD). Touch/click MP4 to show MP4 clips or to show photos.
- Touch/click the desired recording from the list of recordings. For MP4 clips, touch/click ▶ to play back the clip. For photos, the photo will be displayed.
- Touch/click to return to the list of recordings.
- Devices other than iOS devices: Touch/click to save a local copy of the MP4 clip/photo on the device.

9 Camcorder: When you have finished playing back, touch [End] and then touch [OK] to end the wireless connection.

NOTES

- Only one device may be connected to the camcorder at a time.
- The following types of MP4 clips will be recognized as multiple files on other devices.
  - Clips exceeding 4 GB
  - Clips recorded at 50.00P exceeding 30 minutes
  - Scenes recorded with a frame rate other than 50.00P exceeding 1 hour

Media Server

Using the media server function, you can wirelessly view your MP4 clips and photos from a connected network device. You will need an access point connected to your network and the software installed on your computer that can play photos on the media server.

Operating modes: MXF MP4 4K HD

1 Camcorder: Open the desired index screen (102).

2 Camcorder: Press the MENU button.

3 Camcorder: Open the [Wi-Fi Media Server] screen.

[Wi-Fi Setup] ➤ [1] ➤ [Media Server]

- If the camcorder has an access point connection saved, [Connected] appears on the screen and the connection is automatically established.
- If the camcorder does not have an access point connection saved, you will be prompted to do so. Perform the procedure in *Wireless Connections Using Wi-Fi* (121).
- Touch [View Information] to see the access point's SSID (network name), connection protocol, camcorder's IP address and camcorder's MAC address.
- From the information screen above, touch [Change Connection Point] to connect to a different access point.

4 Computer: Start the media playback software and select [Canon XC10] from the list of servers.

5 Computer: Select the desired recording to play back from the displayed folder.

6 Camcorder: To end the media server function, touch [End] and then touch [OK].

[Wi-Fi Setup]
[1]
[Media Server]

Menu Options

For details about how to select an item, refer to *Using the FUNC. Menu and Setup Menus* (📖 30). For details about each function, see the reference page. Menu items without a reference page are explained after the tables. Setting options in boldface indicate default values.
Depending on the camcorder's operating mode and the current selection of other settings, some menu items may not appear at all or may appear grayed out in the menu screens.

To skip directly to the page of a specific menu:

FUNC. menu
Available functions by shooting mode 📖 133
FUNC. menu options 📖 134

Setup menus
[🎥/📷 Camera Setup] menu 📖 135
[▶ Playback Setup] menu 📖 136
[Recording Setup] menu 📖 137
[♪ Audio Setup] menu 📖 138
[Wi-Fi Setup] menu 📖 139
[System Setup] menu 📖 139

FUNC. Menu

Available functions by shooting mode (🎥 and 📷 modes; left side of FUNC. menu)

Menu item	Shooting mode													
	M	Av	Tv	P	AUTO	SCN								
[Scene]	–	–	–	–	–	●	●	●	●	●	●	●	●	●
[Looks]	●	●	●	●	–	–	–	–	–	–	–	–	–	–
[Audio Scene][1]	●	●	●	●	●	●	●	●	●	●	●	●	●	●
[Drive Mode][2]	●	●	●	●	●	●	●	●	●	●	●	●	●	●
[Metering Mode]	–	●	●	●	–	–	–	–	–	–	–	–	–	–
[Focus Priority][2]	●	●	●	●	–	●	●	●	●	●	●	●	●	–
[Self Timer]	●	●	●	●	●	●	●	●	●	●	●	●	●	●
[Image Stabilizer]	●	●	●	●	●	●	●	●	●	●	●	●	●	●
[Pre REC][3]	●	●	●	●	●	●	●	●	●	●	●	●	●	●

[1] Available for clips only.
[2] Available for photos only.
[3] Available for HD clips only.

Available functions by shooting mode (and modes; right side of FUNC. menu)

Menu item	Shooting mode													
	M	Av	Tv	P	AUTO	SCN								
[Aperture]	●	●	–	–	–	–	–	–	–	–	–	–	–	–
[Shutter Speed]	●	–	●	–	–	–	–	–	–	–	–	–	–	–
[ISO]	●	–	–	–	–	–	–	–	–	–	–	–	–	–
[Gain][1]	●	–	–	–	–	–	–	–	–	–	–	–	–	–
[White Balance]	●	●	●	●	–	–	–	–	–	–	–	–	–	–
[Mic Level][1]	●	●	●	●	●	●	●	●	●	●	●	●	●	●
[Exposure Lock]	–	●	●	●	–	●	●	●	●	●	●	●	●	–
[AE Shift]	–	●	●	●	–	–	–	–	–	–	–	–	–	–
[Zebra]	●	●	●	●	●	●	●	●	●	●	●	●	●	●
[Peaking]	●	●	●	●	●	●	●	●	●	●	●	●	●	●
[Powered IS][1]	●	●	●	●	●	●	●	●	●	●	●	●	●	●
[Tele-converter][1,2]	●	●	●	●	–	●	●	●	●	●	●	●	●	●
[Focus][2]	●	●	●	●	●	●	●	●	●	●	●	●	●	–
[Magnification][3]	●	●	●	●	●	●	●	●	●	●	●	●	●	●

[1] Available for clips only.
[2] Does not appear in the menu by default. Available through customizing the menu (56).
[3] In mode, does not appear in the menu by default. Available through customizing the menu (56).

FUNC. menu (and modes; left side of FUNC. menu)

Menu item	Setting options	
[Scene]	**[Portrait]**, [Sports], [Night Scene], [Snow], [Beach], [Sunset], [Low Light], [Spotlight], [Fireworks]	54
[Looks]	For clips: **[1 Standard]**, [2 EOS Std.], [3 Wide DR], [4 Cinema EOS Std.], [5 Canon Log], [User Setting 1], [User Setting 2] For photos: **[S Standard]**, [P Portrait], [L Landscape], [N Neutral], [Se Sepia], [M Monochrome], [User Setting 1], [User Setting 2]	65
[Audio Scene][1]	**[Standard]**, [Music], [Festival], [Speech], [Meeting], [Forest and Birds], [Noise Suppression], [Custom Setting]	80
[Drive Mode][2]	**[Single Shot]**, [Continuous], [AF Continuous]	41
[Metering Mode]	For clips: **[Standard]**, [Spotlight], [Backlight] For photos: **[Evaluative]**, [Center-weighted Average], [Spot]	62
[Focus Priority][2]	[Off], [AiAF], **[Center]**	68
[Self Timer]	**[Off]**, [2 sec], [10 sec]	93
[Image Stabilizer]	For clips: [Off], **[Standard]**, [Dynamic][3] For photos: **[On]**, [Off]	75
[Pre REC][3]	[On], **[Off]**	91

[1] Available for clips only.
[2] Available for photos only.
[3] Available for HD clips only.

FUNC. menu (and modes; right side of FUNC. menu)

Menu item	Setting options	
[Aperture]	[F2.8] to [F11]	51, 53
[Shutter Speed]	For clips: [1/2] to [1/2000] **([1/50])** For photos: [0"5] to [1/2000] **([1/125])**	51, 54
[ISO]	[ISO160] to [ISO20000] **([ISO160])**	51
[Gain][1]	[0.0dB] to [42.0dB] **([0.0dB])**	51
[White Balance]	**[AWB Automatic]**, [Daylight], [Shade], [Cloudy], [Fluorescent], [Fluorescent H], [Tungsten], [Flash][2], [K Color Temperature], [Set 1], [Set 2]	63
[Mic Level][1]	**[A]** (automatic), [M] (manual) When set to [M]: 0 to 100	81
[Exposure Lock]	[M] (manual) on or **off** When set to [M]: [-3] to [3] (for clips: 1/4-stop increments, for photos: 1/3-stop increments)	60
[AE Shift]	[-2] to [+2] **(±0)** (for clips: 1/4-stop increments, for photos: 1/3-stop increments)	61
[Zebra]	**[Off]**, [70 70%], [100 100%]	76
[Peaking]	[PEAK On], **[PEAK Off]**	71
[Powered IS][1]	[On], **[Off]**	75
[Digital Tele-conv.][1,3]	[2.0x On], **[2.0x Off]**	67
[Focus][3]	Touch a spot to focus on.	68
[Magnification][3]	**[Off]**, [OK] (on) When set to on: select area to magnify	71

[1] Available for clips only.
[2] Available for photos only.
[3] Does not appear in the menu by default. Available through customizing the menu (98).

Setup Menus

[Camera Setup] menu (mode)/ [Camera Setup] menu (mode)

Menu item	Setting options			
[Face Detection & Tracking]	**[ON On]**, [OFF Off]	●	●	73
[Auto Slow Shutter]	[ON On], **[OFF Off]**	●	–	–
[ND Filter]	[ON On], **[OFF Off]**	●	●	–
[Flicker Reduction]	[A Automatic], **[OFF Off]**	●	–	–
[Auto ISO Limit]	**[A]** (automatic), [ISO] When set to [ISO]: [160] to [4000]	●	●	58
[AGC Limit]	**[A]** (automatic), [GAIN] When set to [GAIN]: [0.0dB] to [28.5dB]	●	–	58
[Shockless WB]	[ON On], **[OFF Off]**	●	–	–
[Onscreen Markers]	**[OFF Off]**, [W Level (White)], [G Level (Gray)], [W Grid (White)], [G Grid (Gray)]	●	●	76
[Focus Ring Direction]	**[NORM Normal]**, [REV Reverse]	●	●	–
[Focus Ring Response]	[Fast], **[Normal]**, [Slow]	●	●	–
[AF Speed]	**[Fast]**, [Normal], [Slow]	●	–	–
[ISO/Gain]	**[ISO ISO]**, [GAIN Gain]	●	–	–

Menu item	Setting options			
[Gain Increment]	**[NORM Normal]**, [FINE Fine]	●	–	–
[Rolling Shutter Reduction]	[ON On], **[OFF Off]**	●	–	–
[Flash]	[Flash Mode], [Flash Exp. Comp.], [Flash Output], [High-speed Sync.], [Reset Flash Settings]	–	●	96

[Auto Slow Shutter]: The camcorder automatically uses slow shutter speeds to obtain brighter recordings in places with insufficient lighting.

- Fastest shutter speed used: 1/25; 1/12 when the frame rate is set to 25.00P;
- When you are recording moving subjects, if a trailing afterimage appears, set the slow shutter to [OFF Off].
- This function is available when the shooting mode is set to **P** or AUTO.
- This function cannot be used when [✳ Exposure Lock] is set to [M].

[ND Filter]: Turning this function on activates the ND filter so that the amount of light is reduced 3 stops (1/8 of the light).

- When an ND filter onscreen display flashes on the screen, it indicates the following.
  [ND]: The picture is overexposed. Set the ND filter to [ON On].
  [ND CLR]: The picture is underexposed. Set the ND filter to [OFF Off].

[Flicker Reduction]: When set to [A Automatic], flicker reduction will automatically detect and reduce flicker.

- When recording under light sources such as fluorescent, mercury or halogen lamps, the screen may flicker depending on the shutter speed. You may be able to avoid flicker by setting the shutter speed mode to a value matching the frequency of the local electrical system: 1/25, 1/50 or 1/100 for 50 Hz systems; 1/30, 1/60 or 1/120 for 60 Hz systems

[Shockless WB]: Creates a softer transition when the white balance is changed.

[Focus Ring Direction]: Changes the direction the focus ring needs to be turned.

[Focus Ring Response]: Selects the sensitivity of the response when operating the focus ring.

[AF Speed]: Selects the speed at which the focus is adjusted during autofocus.

[ISO/Gain]: Selects whether you can adjust settings related to ISO speed or gain.

[Gain Increment]: Selects the increment when adjusting the gain.

[Rolling Shutter Reduction]: Reduces rolling shutter distortion in your recordings.

- This function is available when the resolution is set to 4K.
- When this function is set to [ON On], the following occur.
  - When recording starts, HDMI output will stop.
  - Photos cannot be taken while recording a clip.
  - [Camera Setup] ➤ [1] ➤ [Face Detection & Tracking] and [Flicker Reduction] will not be available.

[Playback Setup] menu

Menu item	Setting options			
[MXF Data Code]	[OFF Off], [Date], [Time], **[Date and Time]**, [Camera Data]	●	–	–
[MP4 Data Code]	[OFF Off], **[Date]**	●	●	–
[Data Code]	[OFF Off], [Date], [Time], **[Date and Time]**	–	●	–
[Auto Rotate]	**[ON On]**, [OFF Off]	–	●	95

[Data Code]: In [ ] and [ ] modes, you can select the appropriate option to display the date and/or the time*. For MXF clips, you can also choose to select [Camera Data] to display the aperture and shutter speed.

* For MP4 clips, only displaying the date is available.

[Recording Setup] menu

Menu item	Setting options					
[Movie Format]	[MXF 4K Clips], **[MXF HD Clips]**, [MP4 HD Clips]	●	–	–	–	49
[MXF 4K Recording]	**[25.00P 25.00P / 305 Mbps]**, [25.00P 25.00P / 205 Mbps]	●	–	–	–	49
[MXF HD Recording]	**[50.00P 50.00P / 50 Mbps]**, [50.00I 50.00i / 35 Mbps], [25.00P 25.00P / 35 Mbps]	●	–	–	–	49
[MP4 HD Recording]	**[50.00P 50.00P / 35 Mbps]**, [25.00P 25.00P / 35 Mbps]	●	–	–	–	49
[Slow & Fast Motion]	**[OFF Normal Recording]**, [x1/4], [x1/2], [x2], [x4], [x10], [x20], [x60], [x120], [x1200]	●	–	–	–	90
[Photo Aspect Ratio]	**[L 4:3 4000x3000]**, [L 3:2 4000x2664], [L 16:9 3840x2160], [S 4:3 640x480]	–	●	–	–	41
[Interval Recording]	**[OFF Off]**, [5sec 5 sec], [10sec 10 sec], [30sec 30 sec], [1min 1 min], [10min 10 min]	–	●	–	–	92
[Photo Review Time]	[OFF Off], [2sec 2 sec], **[4sec 4 sec]**, [6sec 6 sec], [8sec 8 sec], [10sec 10 sec]	–	●	–	–	–
[Detect Orientation]	**[ON On]**, [OFF Off]	–	●	–	–	94
[Available Space in Memory]	[CFast], [SD]	●	●	–	–	–
[Used Space in Memory]	[CFast], [SD]	–	–	●	●	–
[Initialize CFast/SD]	[CFast Memory Card], [SD Memory Card]	●	●	●	●	34
[Time Code Mode]	**[PRESET Preset]**, [REGEN. Regen.]	●	–	–	–	77
[Time Code Running Mode]	**[REC RUN Rec Run]**, [FREE RUN Free Run]	●	–	–	–	77
[Initial Time Code]	[00:00:00:00] to [23:59:59:24] **([00:00:00:00])**, [Reset]	●	–	–	–	78
[User Bit Type]	**[SET Setting]**, [TIME Time], [DATE Date]	●	–	–	–	79
[Color Bars]	**[OFF Off]**, [EBU EBU], [SMPTE SMPTE]	●	–	–	–	87
[1 kHz Tone]	[-12dB -12 dB], [-18dB -18 dB], [-20dB -20 dB], **[OFF Off]**	●	–	–	–	87
[File Numbering]	[Reset], **[Continuous]**	●	●	●	●	–

[Photo Review Time]: Selects the time to display a photo after it is recorded.

[Available Space in Memory]/[Used Space in Memory]: Displays a screen where you can verify how much of the recording media is currently available for recording or how much is in use (the recording media icon shows the total recording time and [ ] shows the total number of photos).

- Estimated figures about available clip recording time and available number of photos are approximate and based on the bit rate and photo size currently in use.
- You can also check the SD card's speed class.

[File Numbering]: MP4 clips and photos are automatically assigned consecutive numbers and stored on the SD card in folders. You can select the file numbering method to be used. We recommend using the [Continuous] setting.

[Reset]: File numbers will restart from 100-0001 every time you insert a new SD card. If an SD card already contains previous recordings, file numbers will continue from the number following that of the last file on the SD card.

[Continuous]: File numbers will continue from the number following that of the last MP4 clip or photo recorded with the camcorder. This setting is the most convenient for managing files on a computer.

- About folder names: An example folder name is “101_1025”. The first 3 digits indicate the folder number (from 100 to 999) and the last 4 digits indicate the month and day when the folder was created. In the example, the folder numbered 101 was created on October 25.
  - Each folder can contain up to 500 recordings. When that number is exceeded, a new folder is created automatically. When taking photos while the drive mode is set to [Continuous] or [AF Continuous], more than 500 photos may be saved in a folder.
- About file numbers: An example file number is “101-0107”. The first 3 digits indicate the folder number the recording is stored in and the last 4 digits indicate the consecutive number assigned to the recording (from 0001 to 9999).
- About file names: The file name also indicates the name and location of the file on the SD card. For example, a recording numbered 101-0107 that was recorded on October 25 is located in the folder “DCIM**101**_1025” as the file “MVI_**0107**.MP4” (if it is an MP4 clip) or “IMG_**0107**.JPG” (if it is a photo).

[Audio Setup] menu

Menu item	Setting options					
[Headphone Volume]	, OFF 0-15 **(8)**	●	–	●	●	107
[Speaker Volume]	, OFF 0-15 **(8)**	–	–	●	●	107
[Notification Sounds]	[High Volume], [Low Volume], **[OFF Off]**	●	●	●	●	–
[Built-in Mic Wind Screen]	**[H Auto (High)]**, [L Auto (Low)], [OFF Off]	●	–	–	–	82
[Built-in Mic Att.]	**[A Automatic]**, [ON On], [OFF Off]	●	–	–	–	83
[Built-in Mic Freq. Response]	**[NORM Normal]**, [LB Boost LF Range], [LC Low Cut Filter], [MB Boost MF Range], [LHB Boost HF+LF Range]	●	–	–	–	83
[Built-in Mic Directionality]	[2ch MONO Monaural], **[NORM Normal]**, [2ch WIDE Wide]	●	–	–	–	84
[MIC Att.]	**[A Automatic]**, [ON On], [OFF Off]	●	–	–	–	84
[MIC Low Cut]	[ON On], **[OFF Off]**	●	–	–	–	85
[MIC Terminal Input]	[LINE External Audio], **[MIC Microphone]**	●	–	–	–	85
[Audio Limiter]	**[ON On]**, [OFF Off]	●	–	–	–	85
[Audio Compressor]	[H High], **[L Low]**, [OFF Off]	●	–	–	–	86

[Notification Sounds]: A beep will accompany some operations like turning on the camcorder, the self timer countdown, etc.

- Set to [OFF Off] to turn off notification sounds.
- While pre-recording (91) is activated, the camcorder will not emit any notification sounds.

[Wi-Fi Setup] menu

Menu item	Setting options					
[Browser Remote]	**[Off]**, [On]	●	●	–	–	127
[Playback via Browser]	–	–	–	●	●	131
[Media Server]	–	–	–	●	●	132
[Browser Connection Settings]	–	●	●	●	●	127
[Smartphone Connection]	–	●	●	●	●	125
[Access Point Connection]	–	●	●	●	●	121, 125
[Display MAC Address]	–	●	●	●	●	126

[System Setup] menu

Menu item	Setting options					
[Language]	[Česky], [Dansk], [Deutsch], [Ελληνικά], **[English]**, [Español], [Français], [Italiano], [Magyar], [Melayu], [Nederlands], [Norsk], [Polski], [Português], [Română], [Suomi], [Svenska], [Türkçe], [Русский], [Українська], [العربية], [فارسی], [ภาษาไทย], [简体中文], [**繁體中文**], [한국어], [日本語]	●	●	●	●	29
[Time Zone/DST]	[ ] (home time zone) or [ ] (travel time zone): **[Paris]**, list of world time zones [ ] (DST adjustment): Toggle on or **off**	●	●	●	●	29
[Date/Time]	[Date/Time]: – [Date Format]: [Y.M.D],[M.D,Y], **[D.M.Y]** (Y- year, M- month, D- day) [24H]: Toggle on (24-hour clock) or **off (12-hour clock)**	●	●	●	●	28
[LCD Brightness]		●	●	●	●	–
[LCD Backlight]	[H Bright], **[M Normal]**, [L Dim]	●	●	●	●	–
[Fan]	[A Automatic], **[ON On]**	●	–	–	–	48
[Wireless Remote Control]	[ON On], **[OFF Off**]	●	●	–	–	36
[Tally Lamp]	**[ON On]**, [OFF Off]	●	●	●	●	–
[Auto Power Off]	[ON On], **[OFF Off]**	●	●	●	●	–
[Assign Button 1], [Assign Button 2], [Assign Button 3]*	[DISP. DISP.], [PUSH AF Push AF], [MAGN. Magnification], [Zebra], [PEAK Peaking], [20x Digital Tele-conv.], [Powered IS], [ND ND Filter], [START STOP Start / Stop], [PHOTO Photo]	●	●	●	●	99
[Control Dial]	**[IRIS Aperture]**, [SHTR Shutter Speed], [ISO ISO/Gain] ([GAIN ISO/Gain])	●	●	–	–	51
[Customize FUNC. Menu]	[IRIS Aperture], [SHTR Shutter Speed], [ISO ISO], [GAIN Gain], [AWB White Balance], [Mic Level], [Exposure Lock], [AE Shift], [Zebra], [PEAK Peaking], [Powered IS], [20x Digital Tele-conv.], [Focus], [MAGN. Magnification]	●	–	–	–	98
[Customize FUNC. Menu]	[IRIS Aperture], [SHTR Shutter Speed], [ISO ISO], [AWB White Balance], [Exposure Lock], [AE Shift], [Zebra], [PEAK Peaking], [Focus], [MAGN. Magnification]	–	●	–	–	98
[Battery Info]	–	●	●	●	●	–
[HDMI Time Code]	[ON On], **[OFF Off]**	●	–	–	–	–
[HDMI Rec Command]	[ON On], **[OFF Off]**	●	–	–	–	–
[HDMI Status]	–	●	–	●	●	–

Menu item	Setting options					
[Distance Units]	**[m meters]**, [ft feet]	●	●	–	–	–
[Backup Menu Settings SD]	[Save], [Load]	●	●	●	●	101
[GPS Auto Time Setting]	**[OFF Off]**, [A Auto Update]	●	●	–	–	89
[GPS Information Display]	–	●	●	–	–	89
[Output Onscreen Displays]	[ON On], **[OFF Off]**	●	–	●	●	–
[Certification Logo Display]	–	●	●	●	●	–
[Firmware]	–	●	–	–	–	–
[Reset All]	[No], [Yes]	●	●	●	●	–

* The default settings are as follows. [Assign Button 1]: [DISP. DISP.], [Assign Button 2]: [PUSH AF Push AF], [Assign Button 3]: [MAGN. Magnification].

[LCD Brightness]: Adjusts the brightness of the LCD screen.

- Changing the brightness of the LCD screen does not affect the brightness of your recordings or the brightness of the playback image on a TV.

[LCD Backlight]: Sets the screen to one of three brightness levels.

- Changing the brightness of the LCD screen does not affect the brightness of your recordings or the brightness of the playback image on a TV.
- Using the [**H** Bright] setting will shorten the effective usage time of the battery pack.

[Tally Lamp]: When this function is set to [ON On], the tally lamp illuminates when the camcorder is recording a clip; it flashes when the self timer is counting down and flashes at a faster rate when under 2 seconds remain.

[Auto Power Off]: In order to save power when the camcorder is powered by a battery pack, it will automatically shut off if left without any operation for 5 minutes.

- Approximately 30 seconds before the camcorder shuts off, [Auto Power Off] will appear. Operating any of the camcorder's controls while the message is displayed will prevent the camcorder from shutting off.

[Battery Info]: This option displays a screen where you can verify the battery charge (as a percentage) and the remaining recording time (and modes) or playback time (and modes).

- If the battery pack is exhausted, the battery information may not be displayed.
- The ▮▮▮ indicates the battery life of the battery pack. If ▮▮▮ appears in green, battery life has not diminished. If ▮▮▮ appears in green, the battery life has partly diminished. If ▮▮▮ appears in red, we recommend that you replace the battery pack.

[HDMI Time Code]: Allows you to output a time code signal from the HDMI OUT terminal.

[HDMI Rec Command]: When this function is set to [ON On] and you use the HDMI OUT terminal to connect the camcorder to a device compatible with HDMI recording commands, when you start or stop recording with the camcorder, the other device will also start or stop recording. This function is not available when [HDMI Time Code] is set to [OFF Off].

[HDMI Status]: Displays a screen where you can verify the standard of the output signal from the HDMI OUT terminal.

[Distance Units]: Selects the units to use for the focusing distance display while focusing manually. This setting also affects units for GPS information when using the optional GP-E2 GPS Receiver.

[Output Onscreen Displays]: When set to [ON On], the camcorder's onscreen displays will appear also on the screen of a TV or monitor connected to the camcorder. Not available for 4K clips.

[Certification Logo Display]: This displays select certification logos that apply to this camcorder.

- This setting may not be available depending on the country/region of purchase.

[Firmware]: You can verify the current version of the camcorder's firmware. This menu option is usually unavailable.

[Reset All]: Resets all of the camcorder's settings.

Troubleshooting

If you have a problem with your camcorder, refer to this section. Consult your dealer or a Canon Service Center if the problem persists.

Power source

The camcorder will not turn on or it turns off by itself.
- The battery pack is exhausted. Replace or charge the battery pack.
- Remove the battery pack and reattach it correctly.

Cannot charge the battery pack.
- Make sure the camcorder is off so charging can start.
- The temperature of the battery pack is outside its operating range (approximately 0 – 40 °C). Remove the battery pack, warm it or let it cool down, as necessary, and try charging it again.
- Charge the battery pack in temperatures between approximately 0 °C and 40 °C.
- The battery pack is faulty. Replace the battery pack.
- The camcorder cannot communicate with the battery pack attached. Non-genuine Canon battery packs cannot be charged using this camcorder.
- If you are using a genuine Canon battery pack, there may be a problem with the camcorder or battery pack. Consult a Canon Service Center.
- Canon's LP-E6 Battery Pack cannot be charged. Check the bottom label of the battery pack and make sure it is an LP-E6N Battery Pack.

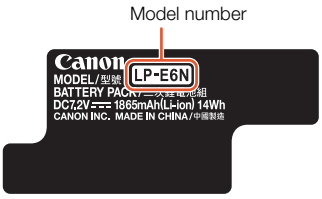

A noise can be heard from the compact power adapter.
- A faint sound can be heard while the compact power adapter is connected to a power outlet. This is not a malfunction.

The battery pack is exhausted extremely quickly even at normal temperatures.
- The battery may have reached the end of its battery life. Buy a new battery pack.

Recording

Pressing the START/STOP button will not start recording.
- You cannot record while the camcorder is writing previous recordings onto a recording media (while the ACCESS indicator is on or flashing). Wait until the camcorder has finished.
- The recording media is full or it already contains 999 clips (the maximum number of clips). Delete some recordings (📖 110) or initialize the recording media (📖 34) to free some space.
- The folder and file numbers have reached their maximum value. Set [Recording Setup] ➤ [3] (in 🎥 mode), [2] (in 📷 mode) or [1] (in 🎥 and 📷 modes) ➤ [File Numbering] to [Reset] (📖 138) and insert a new SD card.

The point where the START/STOP button was pressed does not match the beginning/end of the recording.
- There is a slight interval between pressing the button and the actual start/end of recording. This is not a malfunction.

The camcorder will not focus.
- The camcorder may not be able to focus on certain subjects using autofocus. Focus manually (📖 70).
- The viewfinder unit is not adjusted. Use the dioptric adjustment lever to make the proper adjustment (📖 22).
- The lens is dirty. Clean the lens or sensor with a soft lens-cleaning cloth.

When a subject flits across in front of the lens, the image appears slightly bent.
- This is a phenomenon typical of CMOS image sensors. When a subject crosses very quickly in front of the camcorder, the image may seem slightly warped. This is not a malfunction.

Changing between recording (●), record standby (■) and playback (▶) takes longer than usual.
- When the recording media contains a large number of clips, some operations may take longer than usual. Save your recordings (📖 115, 118) and initialize the recording media (📖 34). Alternatively, replace the recording media.

The camcorder cannot record to the recording media properly.
- This may occur as recordings are made and deleted over time. Save your recordings (📖 115, 118) and initialize the recording media (📖 34). In the case of SD cards, initialize using the [Complete Initialization] option.

After using the camcorder for a long time, it becomes hot.
- The camcorder may become hot after using it continuously for long periods of time; this is not a malfunction. If the camcorder becomes unusually hot or it becomes hot after using it only for a short while, it may indicate a problem with the camcorder. Consult a Canon Service Center.

Playback

Deleting clips takes longer than usual.
- When the recording media contains a large number of clips, some operations may take longer than usual. Save your recordings (📖 115, 118) and initialize the recording media (📖 34).

Cannot delete clips/photos.
- The LOCK switch on the SD card is set to prevent accidental erasure. Change the position of the LOCK switch.
- Photos that were protected using other devices cannot be deleted with the camcorder.

Cannot mark individual clips/photos in the index screen with a checkmark ✓
- You cannot select more than 100 clips/photos individually. Select the [All Clips] or [All Photos] option instead of [Select].

Indicators and Onscreen Displays

appears in red on the screen.
- Battery pack is exhausted. Replace or charge the battery pack.

appears on the screen.
- The camcorder cannot communicate with the battery pack attached so the remaining battery time cannot be displayed.

The tally lamp does not illuminate.
- Set [System Setup] ❯ [2] (in 🎥 and 📷 modes) or [1] (in 🎥 and 📷 modes) ❯ [Tally Lamp] to [On].

Fast or SD appears in red on the screen.
- There is not enough available space on the recording media. Delete some recordings (📖 110) to free some space or replace the recording media.
- The folder and file numbers for clips and photos have reached their maximum value. After saving your recordings (📖 115, 118), set [Recording Setup] ❯ [3] (in 🎥 mode), [2] (in 📷 mode) or [1] (in 🎥 and 📷 modes) ❯ [File Numbering] to [Reset]. Then, initialize the recording media (📖 34) or delete all the recordings (📖 110).

or SD appears in red on the screen.
- An error has occurred with the indicated recording media. Remove it and then reinsert it. If the display does not change back to normal, save your recordings (📖 115, 118) and initialize the recording media (📖 34).

Even after stopping recording, the ACCESS indicator flashes in red.
- The clip is being recorded. This is not a malfunction.

The red POWER/CHG indicator flashes rapidly (one flash at 0.5-second intervals).

- The temperature of the battery pack is outside its operating range (approximately 0 – 40 °C). Remove the battery pack, warm it or let it cool down, as necessary, and try charging it again.
- Charge the battery pack in temperatures between approximately 0 °C and 40 °C.
- The battery pack is damaged. Use a different battery pack.
- Canon's LP-E6 Battery Pack cannot be charged. Check the bottom label of the battery pack and make sure it is an LP-E6N Battery Pack.
- Charging has stopped because the compact power adapter or the battery pack is faulty. Consult a Canon Service Center.

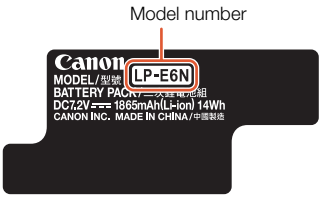

keeps flashing on the screen.

- You connected the optional GP-E2 GPS Receiver to the camcorder's USB terminal in [ ] or [ ] mode. Disconnect the GP-E2 and connect in again after setting the camcorder in [ ] or [ ] mode.

appears in yellow on the screen.

- The camcorder's internal temperature has risen to a predetermined level. The camcorder can continue to be used without issue.

appears in red on the screen.

- After appears in yellow on the screen, the camcorder's internal temperature has risen even higher. The camcorder can continue to be used without issue.

Picture and Sound

The screen appears too dark.

- The LCD screen was dimmed. Change the [System Setup] ➤ [1] ➤ [LCD Backlight] setting to [Normal] or [Bright].

Screen displays turn on and off repeatedly.

- The battery pack is exhausted. Replace or charge the battery pack.
- Remove the battery pack and reattach it correctly.

Abnormal characters appear on the screen and the camcorder does not operate properly.

- Disconnect the power source and reconnect it after a short time.

Video noise appears on screen.

- Keep a distance between the camcorder and devices that emit strong electromagnetic fields such as near powerful magnets and motors, MRI machines or high-voltage power lines.

Horizontal bands appear on the screen.

- This is a phenomenon typical of CMOS image sensors when recording under some types of fluorescent, mercury or sodium lamps. This is not a malfunction. In [ ] mode, you may be able to reduce the symptoms by setting [Camera Setup] ➤ [1] ➤ [Flicker Reduction] to [Automatic]. Alternatively, or in [ ] mode, set the shutter speed to a value matching the frequency of the local electrical system (1/25, 1/50 or 1/100 for 50 Hz systems; 1/30, 1/60 or 1/120 for 60 Hz systems).

The viewfinder unit picture is blurred.

- Adjust the viewfinder unit with the dioptric adjustment lever (📖 22).

Audio cannot be recorded.

- The external audio source connected to the MIC terminal is not turned on or its battery is empty.

Sound is distorted or is recorded at lower levels.

- When recording near loud sounds (such as fireworks, shows or concerts), sound may become distorted or it may not be recorded at the actual levels. Adjust the audio recording level manually (📖 81).

The picture is displayed correctly but there is no sound from the built-in speaker.

- Speaker volume is turned off. Adjust the volume (📖 107).
- Sound will not be output from the built-in speaker while headphones or the supplied HTC-100/S High Speed HDMI cable is connected to the camcorder. Disconnect the headphones or HDMI cable.

Recording Media and Accessories

Cannot insert the recording media.
- The CFast card or SD card you are trying to insert is not facing the correct direction. Turn it over and insert it.

Cannot record 4K clips on the CFast card.
- A compatible CFast card must be used (📖 32).
- Initialize the CFast card (📖 34) when you use it with the camcorder for the first time.
- The CFast card is full or it already contains the maximum number of clips (999 clips). Delete some clips (📖 110) to free some space or replace the CFast card.

Cannot record HD clips or photos on the SD card.
- A compatible SD card must be used (📖 32).
- Initialize the SD card using the [Complete Initialization] option (📖 34) when you use it with the camcorder for the first time.
- The LOCK switch on the SD card is set to prevent accidental erasure. Change the position of the LOCK switch.
- The SD card is full or it already contains the maximum number of clips (999 clips). Delete some recordings (📖 110) to free some space or replace the recording media.
- The folder and file numbers have reached their maximum value. Set [Recording Setup] ➤ [3] (in 🎥 mode), [2] (in 📷 mode) or [1] (in 🎥 and 📷 modes) ➤ [File Numbering] to [Reset] (📖 138) and insert a new SD card.
- While an external device is connected to the HDMI OUT terminal, you cannot take photos while recording a clip.

The supplied remote controller will not work.
- Set [System Setup] ➤ [2] (in 🎥 mode) or [1] (in 📷 mode) ➤ [Wireless Remote Control] to [On].
- Replace the battery of the remote controller.

The optional Speedlite will not fire.
- Make sure the optional Speedlite is attached correctly to the camcorder.
- The following functions are not compatible with this camcorder: flash mode settings of MULTI, Ext.A and Ext.B; FEB (except for the ±0 setting); and second curtain sync.
- When the shooting mode is set to SCN and [Fireworks] is selected, the optional flash will not fire when the [Camera Setup] ➤ [2] ➤ [Flash] ➤ [Flash Mode] setting is set to [Automatic]. Change the setting to [Manual].
- The optional Speedlite will not fire in interval recording mode.
- When you are using the 320EX Speedlite, the Speedlite will not fire if the LED light is on. Set the Speedlite's LED light switch to M and then turn off the LED light.

The flash exposure compensation level cannot be adjusted even though the [Camera Setup] ➤ [2] ➤ [Flash] ➤ [Flash Exp. Comp.] setting has been selected.
- When a flash exposure compensation level other than ±0 has been selected on the optional Speedlite, you cannot set the level with the camcorder. Set the Speedlite's level to ±0.

When using an optional Speedlite, the shutter speed changes.
- When the [Camera Setup] ➤ [2] ➤ [Flash] ➤ [High-speed Sync.] setting is set to [Off], the shutter speed is limited to 1/250 or slower. Change the setting to [On] and adjust the shutter speed.

When using an optional Speedlite, the flash output is not at an appropriate level.
- When using a Speedlite that is not an EX-series Speedlite*, you may not be able to control the flash output correctly.
- The [Camera Setup] ➤ [2] ➤ [Flash] ➤ [Flash Mode] setting is set to [Manual] and the [Flash Output] setting is set to 1/1. Adjust the [Flash Output] setting.
- Shooting with the [Camera Setup] ➤ [2] ➤ [Flash] ➤ [High-speed Sync.] setting on consumes a large amount of power. Depending on the distance to the subject, the flash may not recharge quickly enough, resulting in a darker picture. In such case, turn the setting off.

* EX-series Speedlites include the 270EX II, 320EX, 430EX II, 580EX II and 600EX-RT.

Connections with External Devices

Video noise appears on a nearby TV screen.

- When using the camcorder in a room where a TV is located, keep a distance between the compact power adapter and the power or antenna cables of the TV.

Playback looks fine on the camcorder but there is no image on the external monitor.

- The camcorder is not connected correctly to the external monitor. Check the High Speed HDMI cable's connection.
- The video input on the external monitor is not set to the video terminal to which you connected the camcorder. Select the correct video input.

The camcorder is connected using the supplied High Speed HDMI cable, but there is no picture or sound from the HDTV.

- Disconnect the High Speed HDMI cable and then restore the connection or turn the camcorder off and then on again.
- When [Camera Setup] ➤ [3] ➤ [Rolling Shutter Reduction] is set to [On] and recording starts, HDMI output will stop.

The computer does not recognize the camcorder even though the camcorder is connected correctly.

- Disconnect the supplied IFC-300PCU/S USB Cable and turn off the camcorder. After a short while, turn it on again and restore the connection.
- Connect the camcorder to a different USB port on the computer.
- Connect the USB cable while the [📷] index screen is displayed on the camcorder's screen.

Cannot save photos on a computer

- When the SD card contains too many photos (Windows – 2,500 or more, Mac OS – 1,000 or more), you may not be able to transfer photos to a computer. Try using a card reader to transfer the photos on the SD card.

Wi-Fi Functions

Cannot connect with an access point.

- Wi-Fi networks with a stealth function that do not broadcast their network name (SSID) will not be detected by the camcorder during the Wi-Fi network setup. Perform the setup manually (📖 124) or turn off the stealth function of the access point.
- Password information is not saved with the camera settings. When you load onto the camcorder menu settings from an SD card, all the encryption keys and passwords in the Wi-Fi settings are reset. Edit the Wi-Fi settings as necessary (📖 125).
- The wireless signal is not strong enough or there are other devices in the vicinity interfering with the wireless signal. Refer to *Precautions Regarding Wi-Fi Networks* (📖 147).

Cannot connect the camcorder to a network device using Wi-Fi.

- When you reset all the camcorder's settings, all network settings are lost as well. In the Wi-Fi settings of network device, delete the camcorder's network profile and then connect the camcorder again.
- The wireless signal is not strong enough or there are other devices in the vicinity interfering with the wireless signal. Refer to *Precautions Regarding Wi-Fi Networks* (📖 147).

The Playback via Browser application will not start on the Web browser.

- Make sure to activate the function on the camcorder with the [Wi-Fi Setup] ➤ [1] ➤ [Playback via Browser] setting.
- The URL entered into the Web browser's address bar is incorrect. Enter the URL exactly as it appears on the camcorder's screen.
- The recording media slot cover is open or there is no SD card in the camcorder. Check that an SD card that contains MP4 clips and photos is correctly inserted into the camcorder and the SD card slot cover is closed.

The Browser Remote application will not start on the Web browser.

- Make sure to activate the function on the camcorder with the [Wi-Fi Setup] ➤ [1] ➤ [Browser Remote] setting.
- The URL entered into the Web browser's address bar is incorrect. Enter the URL exactly as it appears on the camcorder's screen.
- Browser Remote cannot start while you are shooting with the camcorder. Start Browser Remote before shooting.

The Browser Remote or Playback via Browser screen is not displayed correctly on the Web browser.

- The device, operating system or Web browser used may not be supported. For the latest information about supported systems, visit your local Canon Web site.
- Enable JavaScript and cookies in your Web browser's settings. For details, refer to the help modules or online documentation of the Web browser used.

Precautions Regarding Wi-Fi Networks

When using a Wi-Fi network, try the following corrective actions if the transmission rate drops, the connection is lost, or other problems occur.

Location of the access point (wireless router)

- When using a Wi-Fi network indoors, place the access point in the same room where you are using the camcorder.
- Place the access point in an open, unobstructed location, where people or objects do not come between it and the camcorder.
- Place the access point as close as possible to the camcorder. In particular, note that during outdoor use in poor weather, rain may absorb radio waves and disrupt the connection.

Nearby electronic devices

- If the transmission rate over a Wi-Fi network drops because of interference from the following electronic devices, switching to the 5 GHz band* or to a different channel may solve the problem.
- Wi-Fi networks using the IEEE 802.11b/g/n protocol operate in the 2.4 GHz band. For this reason, the transmission rate may drop if there are nearby microwave ovens, cordless telephones, microphones, or similar devices operating on the same frequency band.
- If another access point operating on the same frequency band as the transmitter is used nearby, the transmission rate may drop.

* The 5 GHz band is not available for camcorders whose identification label contains the camcorder ID “ID0055” and the text “2.4 GHz only” (📖 160).

Using multiple camcorders/access points

- Check that there are no IP address conflicts among the devices connected to the same network.
- If multiple XC10 camcorders are connected to a single access point, connection speeds may be reduced.
- To reduce radio wave interference when there are multiple access points using IEEE 802.11b/g or IEEE 802.11n (in the 2.4 GHz band), leave a gap of four channels between each wireless access point. For example, use channels 1, 6, and 11, channels 2, 7, and 12, or channels 3, 8, and 13. If you can use IEEE 802.11a/n (in the 5 GHz band*), switch to IEEE 802.11a/n and specify a different channel.

* The 5 GHz band is not available for camcorders whose identification label contains the camcorder ID “ID0055” and the text “2.4 GHz only” (📖 160).

List of Messages

Refer to this section if a message appears on the screen. The messages in this section appear in alphabetical order. Note that for some messages, an indication of the recording media involved (CFast or SD) may appear above the message itself.
For error messages related to network connections, refer to *Wi-Fi Functions* (📖 146).

Back up recordings regularly
- This message may appear when you turn on the camcorder. In the event of a malfunction, recordings may be lost so back up your recordings regularly.

Battery communication error. Does this battery display the Canon logo?
- This may be due to using a non-genuine Canon battery pack.
- If you are using a genuine Canon battery pack, there may be a problem with the battery pack or camcorder. Consult a Canon Service Center.

Cannot play back
- You may not be able to play back clips that were recorded with other devices or created or edited on a computer and then transferred to a recording media connected to the computer.
- There is a problem with the recording media. If this message appears often without apparent reason, contact a Canon Service Center.

Cannot play back Check the memory card
- There is a problem with the SD card. Save your recordings (📖 115, 118) and initialize the SD card using the [Complete Initialization] option (📖 34). If the problem persists, use a different SD card.

Cannot record on this memory card.
- A SD card with a nominal capacity of less than 256 MB was inserted into the camcorder. Make sure to use an SD card with a nominal capacity of at least 256 MB.
- A CFast card with a nominal capacity of less than 1 GB was inserted into the camcorder. Make sure to use a CFast card with a nominal capacity of at least 1 GB.
- A recording media initialized using another device was inserted into the camcorder. Save your recordings (📖 115, 118) and initialize the recording media (📖 34).
- The recording media was initialized using a camcorder with different firmware. Save the recordings on the recording media (📖 115), and initialize the recording media with this camcorder (📖 34).

Charge the battery pack
- Battery pack is exhausted. Charge the battery pack.

Check the memory card
- Cannot access the recording media. Check the recording media and make sure it is inserted correctly.
- A recording media error occurred. The camcorder cannot record or display the image. Try removing and reinserting the recording media, or use a different recording media.
- You inserted a MultiMedia Card (MMC) into the camcorder. Use a recommended SD card (📖 32).
- If after the message disappears, CFast or SD appears in red, perform the following: Turn off the camcorder and remove and reinsert the recording media. If CFast or SD turns back to green you can resume recording/playback. If the problem persists, save your recordings (📖 115, 118) and initialize the recording media (📖 34).

File name error
- The folder and file numbers have reached their maximum value. Set [Recording Setup] ➤ [3] (in 🎥 mode), [2] (in 📷 mode) or [1] (in 🎥 and 📷 modes) ➤ [File Numbering] to [Reset] (📖 138) and delete all the MP4 clips and photos (📖 110) on the recording media or initialize it (📖 34).

Initialize only using the camcorder
- There is a problem with the file system that prevents accessing the recording media. Initialize the recording media with this camcorder (📖 34).
- Save your recordings (📖 115, 118) and initialize the recording media (📖 34).

LCD Screen has been dimmed Use the [LCD Backlight] setting to change the brightness
- Change the [System Setup] ➤ [1] ➤ [LCD Backlight] setting to [Normal] or [Bright].

Memory card is full
- The recording media is full. Delete some recordings (📖 110) to free some space or replace the recording media.

Memory card is write-protected
- The LOCK switch on the SD card is set to prevent accidental erasure. Change the position of the LOCK switch.

No memory card
- Insert a compatible recording media into the camcorder (📖 32).
- The recording media may not be inserted correctly. Insert the recording media all the way into the recording media slot until it clicks.

Number of clips already at maximum
- The recording media is full or it already contains the maximum number of clips (999 clips). Delete some clips (📖 110) or replace the CFast card.

Process terminated with error
- The recording media slot cover was opened while initializing the SD card using the [Complete Initialization] option.
- An error occurred while initializing the recording media. Try to initialize the recording media again. If the problem persists, replace the recording media.

Recording was stopped due to insufficient write speed of the memory card
- The data transfer rate was too high for the recording media in use and the recording was stopped. If trying to record on an SD card, replace it with one rated CLASS 10.
- After repeatedly recording, deleting and editing scenes (fragmented memory), it will take longer to write data on the recording media and recording may stop. Save your recordings (📖 115, 118) and initialize the recording media (📖 34). In the case of SD cards, initialize using the [Complete Initialization] option.

Recording was stopped
- The file control information is corrupted or there was an encoder error. As such, clips cannot be recorded. Turn off the camcorder and back on again. Then, remove the recording media being used and reinsert it. Alternatively, replace the recording media. If this does not solve the problem, consult a Canon Service Center.
  - Corrupted file control information cannot be recovered. Recording media or clips with corrupt file control information cannot be read by Canon XF Utility.

Some clips require data recovery.
- A data error has occurred while recording a clip and the data needs to be recovered. Open an index screen in playback mode to recover the data (📖 35).

Task in progress. Do not disconnect the power source.
- The camcorder is updating the recording media. Wait until the operation ends and do not remove the battery pack.

Too many photos. Disconnect the USB cable.
- Disconnect the USB cable. Try using a memory card reader or decrease the number of photos on the recording media to fewer than 2,500 (Windows) or 1,000 (Mac OS). Restore the connection after a short while.
- If the dialog box appeared on the computer screen, close it. Disconnect the USB cable and then restore the connection after a short while.

Unable to recognize the data
- Clips on the recording media were recorded using a video configuration that is not supported (NTSC). Play back the recordings with the device originally used to record them.

Unable to recover data
- The selected clip could not be recovered. Save your recordings (📖 115, 118) and initialize the recording media (📖 34).
- Clips may not be recovered if the recording media is full. Delete some clips (📖 110) to free some space.

List of Messages for Wi-Fi Functions

Refer also to the instruction manual of your access point and other devices you will use.

A User is already accessing the server. Try again later.
- This message appears on the screen of the Wi-Fi device. Multiple Wi-Fi devices are trying to connect with the camcorder. Make sure only one Wi-Fi device is trying to connect and then touch Retry.

Cannot change setting.
- Wi-Fi settings cannot be changed while [Wi-Fi Setup] ➤ [1] ➤ [Browser Remote] is set to [On]. Set it to [Off] and try changing the Wi-Fi settings again.

IP address conflict
- Change the camcorder's IP address to avoid any conflict with devices connected to the same network. Alternatively, change the IP address of the conflicting device.

Memory card cover is open
- The recording media slot cover was opened while the recording media was being accessed. Stop the Wi-Fi function in use and end the Wi-Fi connection.

Multiple access points detected. Try the operation again.
- There are multiple access points sending out a WPS signal at the same time. Try the operation again later or perform setup using the [WPS: PIN Code] or [Search for Access Points] option (📖 121).

No access points found
- The access point set in the camcorder could not be found.
- Cordless phones, microwave ovens, refrigerators and other appliances may interfere with the wireless signal. Try using the camcorder in a location farther away from such appliances.
- Make sure that you use the access point's SSID for the camcorder's Wi-Fi settings (📖 121).
- If the access point is using MAC address filtering, enter the camcorder's MAC address in the access point's configuration screen.

Unable to access configuration files
- Turn off the camcorder. After a short while, turn it on again. If the problem persists contact a Canon Service Center.

Unable to complete WPS.
- Turn off the camcorder and access point (wireless router). After a short while, turn them on again and try again. If the problem persists, perform setup using the [Search for Access Points] option (📖 122).

Unable to complete WPS. Try the operation again.
- Some access points require pressing and holding the Wi-Fi Protected Setup (WPS) button. For details, refer to the instruction manual of your access point.
- Make sure to touch [OK] on the camcorder's screen within 2 minutes of activating the Wi-Fi Protected Setup signal on the access point, whether by pressing the button or by entering the PIN code.

Unable to connect
- Could not connect to the access point or network device selected.
- Cordless phones, microwave ovens, refrigerators and other appliances may interfere with the wireless signal. Try using the camcorder in a location farther away from such appliances.

Unable to obtain an IP address
- If you are not using a DHCP server, connect using the [Manual Setup] option and enter the IP address using the [Manual] option (📖 124).
- Turn on the DHCP server. If it is already on, make sure it is functioning properly.
- Turn on the DNS server. If it is already on, make sure it is functioning properly.
- Make sure the address range for the DHCP server is sufficient.
- If you are not using a DNS server, set the DNS address to [0.0.0.0].
- Set the DNS server's IP address in the camcorder.
- Turn on the DNS server. If it is already on, make sure it is functioning properly.
- Make sure that the DNS server's IP address and the name for that address are correctly configured.
- If you are using a wireless gateway router, make sure all of the devices in the network, including the camcorder, are configured with the correct gateway address.

Wi-Fi authentication unsuccessful
- Make sure the camcorder and access point are using the same authentication/encryption method and encryption key.
- If the access point is using MAC address filtering, enter the camcorder's MAC address in the access point's configuration screen.

Wi-Fi connection terminated
- Cordless phones, microwave ovens, refrigerators and other appliances may interfere with the wireless signal. Try using the camcorder in a location farther away from such appliances.
- The camcorder may not be able to connect to the access point if too many devices are accessing it. After a short while, establish the connection again.

Wi-Fi error. Incorrect authentication method.
- Make sure the camcorder and access point are correctly configured.
- Make sure the camcorder and access point are using the same authentication/encryption method and encryption key.
- If the access point is using MAC address filtering, enter the camcorder's MAC address in the access point's configuration screen.

Wi-Fi error. Incorrect encryption key.
- The encryption key (password) is case sensitive so make sure to enter it correctly.

Wi-Fi error. Incorrect encryption method.
- Make sure the camcorder and access point are using the same authentication/encryption method.
- If the access point is using MAC address filtering, enter the camcorder's MAC address in the access point's configuration screen.

Wi-Fi functions are not available in this index screen.
- The Wi-Fi function cannot be activated from an index screen for MXF clips (4K or HD). Activate the function from the index screen for MP4 clips or photos.

Wireless communication is not working correctly

- Cordless phones, microwave ovens, refrigerators and other appliances may interfere with the wireless signal. Try using the camcorder in a location farther away from such appliances.
- Turn off the camcorder and access point (wireless router). After a short while, turn them on again and perform the Wi-Fi network setup again. If the problem persists contact a Canon Service Center.

Handling Precautions

Camcorder

Be sure to observe the following precautions to ensure maximum performance.

- Do not carry the camcorder by the LCD panel. Be careful when closing the LCD panel.
- Do not leave the camcorder in places subject to high temperatures (like the inside of a car parked under direct sunlight), or high humidity.
- Do not use the camcorder near strong electromagnetic fields such as near powerful magnets and motors, MRI machines or high-voltage power lines. Using the camcorder in such places may cause anomalies in the video or audio or video noise to appear.
- Do not use the camcorder's Wi-Fi functions inside hospitals or medical clinics. In addition, do not use them near medical equipment or sensitive electronic devices as it may affect their performance. In the case of pacemakers, keep the camcorder at least 22 cm away from the device.
  Regarding the use of Wi-Fi functions aboard aircraft, be sure to follow the instructions of the flight crew/cabin attendants.
- The camcorder's Wi-Fi functions may be subject to interference from devices such as cordless phones and microwave ovens. Keeping as much distance as possible from these devices or using the camcorder's Wi-Fi functions at a different time of day may reduce such interference.
- Do not use or store the camcorder in dusty or sandy places. The camcorder is not waterproof – avoid also water, mud or salt. If any of the above should get into the camcorder it may damage the camcorder and/or the lens. Consult a Canon Service Center as soon as possible.
- Be careful to avoid dust and dirt particles accumulating on the lens or entering the camcorder. When you finish using the camcorder, make sure to remove the lens hood and attach the lens cap to the camcorder.
- Do not point the camcorder or viewfinder unit toward an intense light source, such as the sun on a sunny day or an intense artificial light source. Doing so may cause blindness.
- Do not point the camcorder or viewfinder unit toward an intense light source, such as the sun on a sunny day or an intense artificial light source. Doing so may damage the image sensor or the camcorder's internal components. Be careful especially when using a tripod or shoulder strap. When you are not using the camcorder, make sure to attach the lens cap to the camcorder.
- When you are not using the viewfinder unit, make sure to attach the viewfinder unit cover to the unit.
- Be careful of heat generated by lighting equipment.
- Do not disassemble the camcorder. If the camcorder does not function properly, consult qualified service personnel.
- Handle the camcorder with care. Do not subject the camcorder to shocks or vibration as this may cause damage. When using the shoulder strap, do not allow the camcorder to swing and hit an object.

Long-term storage

If you do not intend to use the camcorder for a long time, store it in a place free of dust, in low humidity, and at temperatures not higher than 30 °C.

Battery Pack

DANGER!

Treat the battery pack with care.

- Keep it away from fire (or it might explode).
- Do not expose the battery pack to temperature higher than 60 °C. Do not leave it near a heater or inside a car in hot weather.
- Do not try to disassemble or modify it.
- Do not drop it or subject it to shocks.
- Do not get it wet.

- Keep the product and its battery out of reach of children. Do not insert or change batteries in front of children.
- If you think a child has swallowed a battery, contact a physician immediately. Batteries contain harmful chemicals and can cause damage to internal organs if ingested.
- Dirty terminals may cause a poor contact between the battery pack and the camcorder. Wipe the terminals with a soft cloth.

Long-term storage

- Store battery packs in a dry place at temperatures no higher than 30 °C.
- To extend the battery life of the battery pack, discharge it completely before storing it.
- Charge and discharge all your battery packs fully at least once a year.

Always attach the battery pack's protective cover.

Do not allow any metal objects to touch the terminals, as this can cause a short circuit and damage the battery pack. Attach the protective cover whenever the battery pack is not being used (figure 1).

The battery terminal cover has a ▭-shaped hole. This is useful when you wish to differentiate between charged and uncharged battery packs. For example, with charged battery packs, attach the terminal cover so that the ▭-shaped hole shows the blue-colored label.

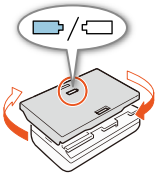

Figure 1

Remaining battery time

If the remaining battery time displayed is not correct, charge the battery pack fully. Still, the correct time may not be displayed if a fully charged battery pack is used continuously in high temperatures or it is left unused for long periods of time. Also, the correct remaining time may not be displayed, depending on the battery life. Use the time shown on the screen as an approximation.

Recording Media

- We recommend backing up the recordings on the recording media onto your computer. Data may be corrupted or lost due to defects or exposure to static electricity. Canon shall not be liable for lost or corrupted data.
- Do not touch or expose the terminals to dust or dirt.
- Do not use recording media in places subject to strong magnetic fields.
- Do not leave recording media in places subject to high humidity and high temperature.
- Do not disassemble, bend, drop, or subject recording media to shocks and do not expose them to water.
- Check the direction before inserting the recording media. Forcing recording media into the slot if it is not correctly oriented may damage the recording media or the camcorder.
- Do not attach any labels or stickers on the recording media.

Disposal

When you delete data on the recording media, only the file allocation table is altered and stored data is not physically erased. Take the necessary precautions when you dispose of the recording media, for example by physically damaging it to prevent the leakage of private data.
If giving the recording media to another person, initialize it (using the [Complete Initialization] initialization option for SD cards) (📖 34). Fill it up with unimportant recordings, and then initialize it again. This makes recovering the original recordings very difficult.

Built-in Rechargeable Lithium Battery

The camcorder has a built-in rechargeable lithium battery to keep the date/time and other settings. The built-in lithium battery is recharged while you use the camcorder; however, it will discharge completely if you do not use the camcorder for about 3 months.

To recharge the built-in lithium battery: Connect the compact power adapter to the camcorder and use a household power outlet to power the camcorder for 24 hours while it is turned off.

Lithium Button Battery

WARNING!

- The battery used in this device may present a fire or chemical burn hazard if mishandled.
- Do not disassemble, modify, immerse in water, heat above 100 °C or incinerate the battery.
- Do not insert the battery into the mouth. If swallowed, seek medical assistance immediately. The battery case may break and the battery fluids may cause internal injuries.
- Keep the battery out of the reach of children.
- Do not recharge, short-circuit or insert the battery in the wrong direction.
- The used battery should be returned to the supplier for safe disposal.

- Do not pick up the battery using tweezers or other metal tools, as this will cause a short circuit.
- Wipe the battery with a clean dry cloth to ensure proper contact.

Maintenance/Others

Cleaning

Camcorder Body

- Use a soft, dry cloth to clean the camcorder body. Never use chemically treated cloths or volatile solvents such as paint thinner.

Lens

- If the lens surface is dirty, autofocus may not work properly.
- Remove any dust or dirt particles using a non-aerosol type blower brush.
- Use a clean, soft lens-cleaning cloth to gently wipe the lens. Never tissue paper.

LCD Screen

- Clean the LCD screen using a clean, soft lens-cleaning cloth using commercially available cleaning fluid for eyeglasses.
- Condensation may form on the surface of the screen when the temperature changes suddenly. Wipe it with a soft dry cloth.

Viewfinder Unit

- To remove dust or dirt particles, use a clean, soft lens-cleaning cloth to gently wipe the viewfinder unit using commercially available cleaning fluid for eyeglasses.

Condensation

Moving the camcorder rapidly between hot and cold temperatures may cause condensation (water droplets) to form on its internal surfaces. Stop using the camcorder if condensation is detected. Continued use may damage the camcorder.

Condensation may form in the following cases:

- When the camcorder is moved quickly from cold to warm places
- When the camcorder is left in a humid room
- When a cold room is heated rapidly

To avoid condensation

- Do not expose the camcorder to sudden or extreme changes in temperature.
- Remove the recording media and battery pack. Then, place the camcorder in an airtight plastic bag and let it adjust gradually to temperature changes before removing it from the bag.

When condensation is detected

The precise time required for water droplets to evaporate will vary depending on the location and weather conditions. As a general rule, wait for 2 hours before resuming use of the camcorder.

Using the Camcorder Abroad

Power Sources

You can use the compact power adapter to operate the camcorder and to charge battery packs in any country with power supply between 100 and 240 V AC, 50/60 Hz. Consult a Canon Service Center for information on plug adapters for overseas use.

Optional Accessories

The following optional accessories are compatible with this camcorder. The availability differs from area to area.

LP-E6N
Battery Pack

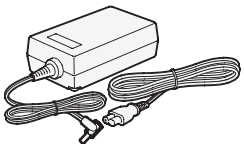

CA-570 Compact
Power Adapter

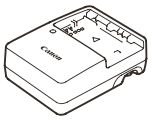

LC-E6E Battery
Charger

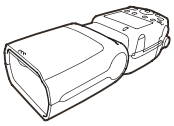

270EX II, 320EX,
430 EX II, 580EX II,
600EX-RT Speedlite

GP-E2
GPS Receiver

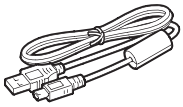

IFC-400PCU
USB Cable

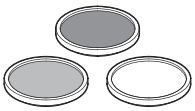

Protect Filter 58 mm,
ND4L Filter 58 mm,
ND8L Filter 58 mm

Use of genuine Canon accessories is recommended.
The message [Battery communication error] is displayed if you use a non-genuine Canon battery pack, and user response is required. Note that Canon shall not be liable for any damages resulting from accidents, such as malfunction or fire, that occur due to use of non-genuine Canon battery packs.

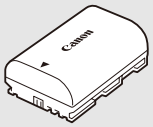

LP-E6N

Battery Packs

When you need extra battery packs, make sure to select the LP-E6N.

This mark identifies genuine Canon video accessories. When you use Canon video equipment, we recommend Canon-brand accessories or products bearing the same mark.

Specifications

XC10

System

- Recording System

MXF Movies: Video compression: MPEG-4 AVC/H.264
Audio compression: Linear PCM, 16 bits, 48 kHz, 2 channels
Movie format: MXF

MP4 Movies: MP4-compliant
Video compression: MPEG-4 AVC/H.264
Audio compression: MPEG-2 AAC-LC, 16 bits, 48 kHz, 2 channels
Movie format: MP4

Photos: DCF (Design rule for Camera File system), compatible with Exif* Ver. 2.3, JPEG compression

* This camcorder supports Exif 2.3 (also called "Exif Print"). Exif Print is a standard for enhancing the communication between camcorders and printers. By connecting to an Exif Print-compliant printer, the camcorder's image data at the time of shooting is used and optimized, yielding extremely high quality prints.

- Video Configuration (recording/playback)

4K clips:
3840x2160: 305 Mbps (25.00P), 205 Mbps (25.00P)
HD clips (MXF):
1920x1080: 50 Mbps (50.00P), 35 Mbps (50.00i, 25.00P)
HD clips (MP4):
1920x1080: 35 Mbps (50.00P, 25.00P)

- Recording Media (not included)

4K clips: CFast card
HD clips and photos: SD, SDHC (SD High Capacity) or SDXC (SD eXtended Capacity) memory card*

* Menu settings can be saved on and read from the SD card as well.

- Maximum Recording Time (approximate, continuous recording)

4K clips:
64 GB CFast card
305 Mbps: 25 min., 205 Mbps: 40 min.
128 GB CFast card
305 Mbps: 55 min., 205 Mbps: 80 min.
HD clips (MXF):
16 GB SD card
50 Mbps: 40 min., 35 Mbps: 60 min.
32 GB SD card
50 Mbps: 80 min., 35 Mbps: 120 min.
HD clips (MP4):
16 GB SD card
35 Mbps: 60 min.
32 GB SD card
35 Mbps: 120 min.

- Image Sensor

1.0-type CMOS sensor
Effective pixels (approximate):
Clips: 8,290,000 pixels (3840x2160)
Photos: 12,000,000 pixels (4000x3000), 10,660,000 pixels (4000x2664), 8,290,000 pixels (3840x2160)

- LCD Touch Screen

7.66cm (3.0 in.), approx. 1,030,000 dots, 100% coverage, capacitive touch screen operation

- Lens
  F/2.8-5.6, 10x optical zoom, 8-bladed iris aperture
  35 mm equivalent: 27.3 – 273 mm (clips), 24.1 – 241 mm (4:3 photos)
- Lens Configuration: 14 elements in 12 groups (3 aspheric elements on 2 lenses)
- Filter Diameter: 58 mm
- Minimum Focusing Distance
  50 cm from the front of the lens; 8 cm at full wide angle
- Focusing System
  Autofocus (TTL) or manual focus
- Image Stabilization
  Optical-Shift Image Stabilizer + digital compensation (Standard IS, Dynamic IS, Powered IS)
- Subject Illumination* (manual exposure, gain at 42.0 dB, shutter speed at 1/2)
  Minimum Illumination: 0.05 lux
  Illumination Range: 0.05 lux to 100,000 lux
  * All figures are approximate.
- ND Filter: Built-in
- Iris: Automatic or manual
- ISO Speed: 160 to 20000; auto ISO speed limit
- Gain: 0.0 dB to 42.0 dB; AGC limit
- Exposure: Automatic, manual, other
- White Balance
  Auto white balance (AWB); preset settings (daylight, shade, cloudy, fluorescent, fluorescent H, tungsten, flash*); color temperature setting; custom white balance (two sets, 1 and 2)
  * For photos only.
- Microphone: Stereo electret condenser microphone
- Size of Photos
  4000x3000 pixels, 4000x2664, 3840x2160, 640x480
  When taking photos in mode: 3840x2160 (4K clips), 1920x1080 (HD clips)
  When capturing photos in mode: 3840x2160 (4K clips/4K Frame Grab), 1920x1080 (HD clips), 1280x720 (HD clips recorded in slow motion at x1/4)

Wi-Fi

- Wireless Standard: IEEE802.11b/g/n (2.4 GHz band)
- Connection Methods: Wi-Fi Protected Setup (WPS), search for access points, manual, camera access point
- Supported Channels: See the following sidebar.
- Authentication Methods: Open, WPA-PSK, WPA2-PSK
- Encryption Methods: WEP-64, WEP-128, TKIP, AES

Available frequencies and channels
The camcorder's Wi-Fi functions operate in a predetermined range of frequencies and channels. Note that not all channels may be available for a direct Camera Access Point connection with Wi-Fi-enabled devices.

Frequency	Channels	Available for Camera Access Point connections
2412 MHz to 2472 MHz	1 to 13	Yes

Terminals

- **HDMI OUT Terminal:** HDMI Mini connector, output only; 1080/50.00P, 2160/25.00P output available
- **MIC Terminal**
  ∅ 3.5 mm stereo mini-jack, -65 dBV (manual volume center, full scale -12 dB) / 5k Ω or more
  Microphone attenuator: 20 dB
- **(Headphone) Terminal**
  ∅ 3.5 mm stereo mini-jack, -29 dBV (16 Ω load, volume max) / 100 Ω
- **USB Terminal:** mini-B, Hi-Speed USB, output only

Power/Others

- **Power Supply (rated):** 7.2 V DC (battery pack), 8.4 V DC (DC IN)
- **Power Consumption (screen at normal brightness)**
  When shooting 4K clips (305 Mbps, 25.00P): 6.0 W
  When shooting HD clips (MXF format, 50 Mbps, 50.00P): 5.5 W
  When shooting HD clips (MP4 format, 35 Mbps, 50.00P): 5.5 W
- **Operating Temperature:** 0 – 40 °C
- **Dimensions (W x H x D)***
  Camcorder only: 125 x 102 x 122 mm
  Camcorder with viewfinder unit and lens hood: 131 x 115 x 238 mm
  * All dimensions are approximate.
- **Weight****
  Camcorder unit only: 930 g
  Camcorder with lens hood, LP-E6N battery pack, SD card, CFast card: 1040 g
  **All weights are approximate.

CA-570 Compact Power Adapter

- **Power supply:** 100 – 240 V AC, 50/60 Hz
- **Rated output / consumption:** 8.4 V DC, 1.5 A / 29 VA (100 V) – 39 VA (240 V)
- **Operating temperature:** 0 – 40 °C
- **Dimensions:** 52 x 29 x 90 mm
- **Weight:** 135 g

LP-E6N Battery Pack

- **Battery Type:** Rechargeable lithium ion battery
- **Rated Voltage:** 7.2 V DC
- **Battery Capacity:** 1,865 mAh
- **Operating Temperature:** 0 – 40 °C
- **Dimensions (W x H x D):** 38.4 x 21.0 x 56.8 mm
- **Weight (excluding protective cover):** 80 g

Weight and dimensions are approximate. Errors and omissions excepted.
The information in this manual is verified as of June 2019. Subject to change without notice.

Reference Tables

Number of Photos Available on an SD Card

The numbers given in the following table are approximate and vary according to shooting conditions and the subject.

In mode

Photo aspect ratio/size	Number of photos	
	16 GB	32 GB
4:3 4000x3000	2,150	4,300
3:2 4000x2664	2,450	4,900
16:9 3840x2160	3,150	6,300
4:3 640x480	75,000	150,000

In mode

Photo size	Number of photos	
	16 GB	32 GB
3840x2160	3,150	6,300
1920x1080	12,000	24,000

In mode

Photo size	Number of photos	
	16 GB	32 GB
3840x2160 (4K Frame Grab)	3,150	6,300
1920x1080	12,000	24,000
1280x720	25,000	50,000

Charging Times

Use the supplied CA-570 Compact Power Adapter to charge battery packs. The charging times given in the following table are approximate and vary according to charging conditions and initial charge of the battery pack.

Charging conditions	
Using the camcorder	240 min.
Using the LC-E6E Battery Charger	150 min.

Recording and Playback Times

Recording and playback times given in the following tables are approximate and vary according to operating mode, bit rate, and charging, recording or playback conditions. The effective usage time of the battery pack may decrease when recording in cold surroundings, when using the brighter screen settings, etc. Typical recording times measure recording with repeated operations such as start/stop recording and power on/off.

Movie Format	Frame rate / Bit rate	Recording (maximum)	Recording (typical)	Playback
MXF	25.00P / 305 Mbps	110 min.	75 min.	150 min.
	25.00P / 205 Mbps	115 min.	80 min.	155 min.
	50.00P / 50 Mbps	125 min.	80 min.	185 min.
	50.00i / 35 Mbps	130 min.	80 min.	190 min.
	25.00P / 35 Mbps	140 min.	90 min.	190 min.
MP4	50.00P / 35 Mbps	125 min.	80 min.	185 min.
	25.00P / 35 Mbps	140 min.	90 min.	190 min.

Index

0 – 9

4K frame grab 108

A

Abroad, using the camcorder 155
Accessories 156
AF speed 136
AGC limit 58
Air intake vents 48
Aperture 51, 53
Assignable buttons 99
Audio compressor 86
Audio equalizer 83
Audio limiter 85
Audio recording 80
Audio recording level 81
Audio reference signal 87
Audio scenes 80
Auto (shooting mode) 54
Auto ISO limit 58
Av (Aperture Priority AE) 53

B

Battery pack, charging 18
Beach (Special Scene mode) 55
Bit rate 49
Browser Remote 127
Built-in backup battery 154

C

Canon XF Utility (download) 115
CFast card
- Compatible CFast cards 32
- Initializing 34
- Inserting/Removing 32

Clips
- Playback 102
- Recording 38
- Saving to a computer 115

Color bars 87
Compact power adapter 18
Condensation 155
Connection to an external monitor 114
Cooling fan 48
Customizing the FUNC. menu 98

D

Data Import Utility 117
Date and time 28
Digital tele-converter 67

E

Exposure 60
- AE shift 61
- Exposure lock 60

F

File numbering 138
Fireworks (Special Scene mode) 55
Flash 96
Focus 68
- Face AF 73
- Focus assistance functions 71
- PUSH AF (momentary autofocus) 73

Focus priority 68
Folder number 138
Frame rate 49
Free-run (time code) 77

G

Gain 51
GPS information 88
Grip 24

H

HDMI OUT terminal 114
Headphone terminal 86

I

Image stabilizer 75
Initializing recording media 34
Interval recording mode 92
ISO speed 51, 56

L

Language 29
Lens hood 21
Looks 65
Low cut filter 85
Low light (Special Scene mode) 55

M

M (Manual Exposure) 51
Magnification (while recording) 72
Media server 132
Menu settings 133
Message list 148
Metering mode 62
MIC terminal 80
Microphone attenuator 83, 84
Microphone directionality 84
Monitoring audio 86
Movie format (MXF/MP4) 49

N

ND filter 136
Night scene (Special Scene mode) 55

O

Onscreen displays 43, 104
Onscreen markers 76
Orientation detection 94

P

P (Program AE) 54
Peaking 71
Photos
    Playback 102
    Recording 38
    Saving to a computer 118
Playback 102
Playback via Browser 131
Portrait (Special Scene mode) 54
Powered IS 75
Pre-recording mode 91

R

Rec run (time code) 77
Recording 38
Remote controller 36
Remote operation 36
Resolution (frame size) 49
Rolling shutter distortion reduction 136
Running mode (time code) 77

S

Saving recordings to a computer 115, 117, 118
SCN (Special Scene) 54
SD card
    Compatible SD cards 32
    Initializing 34
    Inserting/Removing 34
Self timer 93
Setup menus 31
Shooting modes 25
Shoulder strap 24
Shutter speed 51, 56
Slow & fast motion recording mode 90
Snow (Special Scene mode) 55
Specifications 158
Sports (Special Scene mode) 55
Spotlight (Special Scene mode) 55
Sunset (Special Scene mode) 55

T

Tally lamp 39
Time code 77
Time zone/DST 29
Touch screen operations 26
Tripod 24
Troubleshooting 142
Tv (Shutter Priority AE) 54

U

User bit 79

V

Video configuration 49
Video output configuration 112
Viewfinder unit 21
Volume 107

W

White balance 63
Wi-Fi functions 120
Wind screen 82

Z

Zebra pattern 76
Zoom 67

Canon Inc. 30-2, Shimomaruko 3-chome, Ohta-ku, Tokyo 146-8501, Japan
Canon Europa N.V. Bovenkerkerweg 59, 1185 XB Amstelveen, The Netherlands http://www.canon-europe.com

ASIA and HONG KONG, S.A.R.
Canon Hongkong Company Ltd
19/F, The Metropolis Tower, 10 Metropolis Drive,
Hunghom, Kowloon, Hong Kong
+852 3191 2333, +852 2428 3963

AUSTRALIA http://www.canon.com.au
Canon Australia Pty Ltd
13-13-83 (within Australia only)
(61) 02-9805-2555

CENTRO Y SURAMÉRICA http://www.cla.canon.com
CANON LATIN AMERICA, INC.

NEW ZEALAND http://www.canon.co.nz
Canon New Zealand Ltd
0800-222-666 (within New Zealand only)
(64) 09-489-0300

SINGAPORE
Canon Singapore Pte. Ltd
1 Fusionopolis Place, #15-10 Galaxis,
Singapore 138522
(65) 6799 8888, (65) 6799 8882

UNITED KINGDOM
Canon UK Ltd
Unit 160, Centennial Park, Centennial Avenue,
Elstree, Hertfordshire, WD6 3SG
020-7660-0186

Visit your local Canon Web site to download the latest version of this Instruction Manual.

© CANON INC. 2019
PUB. DIE-0470-000F