Canon

TM-300

Online Manual

English

Contents

Using This Online Manual. 18

Trademarks and Licenses. 19

Connecting Device to Printer Directly (Wireless Direct). 34

Available Connection Methods. 35

Handling and Use of Paper. 38

Paper. 40

Types of Paper. 41

Paper Sizes. 42

Using Paper Other Than Genuine Paper and feed confirmed Paper. 46

Printing on Paper Other Than Genuine Paper and feed confirmed Paper Using Existing Settings. . . . 47

Printing on Paper Other Than Genuine Paper and feed confirmed Paper by Adding a Media Type. . . 48

Updating paper information. 49

Handling rolls. 50

Loading Rolls on the Roll Holder. 51

Loading Rolls in the Printer. 55

Changing the Type of Paper. 60

Specifying the Paper Length. 63

Removing the Roll from the Printer. 64

Removing Rolls From the Roll Holder. 67

Feeding Roll Paper Manually. 69

Keeping Track of the Amount of Roll Paper Left. 70

Specifying the Ink Drying Time for Rolls. 73

Specifying the Cutting Method for Rolls. 76

Cutting the Leading Edge of Roll Paper Automatically. 81

Reducing Dust from Cutting Rolls. 83

Detecting Roll Paper was Replaced While the Power was Off. 85

Handling sheets. 86

Loading Sheets in the Printer. 87

Printing From a Desired Starting Point. 90

Removing Sheets. 93

Basket. 95

Using the Basket. 96

Changing Settings from Operation Panel/Web Browser. 105
Operations and Touch Screen. 106
Operation Panel. 107
Touch Screen. 109
Checking Instructions During Printer Operations. 113
Changing Settings from Operation Panel. 115
Printer Menu Operations. 116
Menu Operations. 118
Menu Structure. 121
Advanced (Paper settings). 136
Advanced (LAN settings). 138
Changing Settings from Operation Panel. 141
Setting Items on Operation Panel. 143
Job management. 144
Test print. 145
Print settings. 146
HP-GL/2 Settings. 147
LAN settings. 148
Other device settings. 156
Language selection. 158
Paper-related settings. 159
Auto maintenance settings. 161
Administrator password setting. 162
Setting Administrator Password on Operation Panel. 163
Monitoring service settings. 165
Printer information. 166
HP-GL/2 Settings. 147
Menus on HP-GL/2 print settings. 168
Color mode. 169
Print quality. 170
Input resolution. 171
Print target. 172
Paper src. 173
Margin. 174

Oversize. 175
Conserve paper. 179
Rotate. 181
Auto rotation. 182
Enlarge/Reduce. 184
Print centered. 187
Cut to standard size. 189
Mirror. 191
Merge. 193
Smooth. 194
Thicken fine lines. 195
Adjust faint lines. 196
Width correction. 197
Print color list for palettes. 199
Warning display. 200
Detect image size. 201
Select palette. 202
Define palette. 203
Pen 0 to Pen 15. 204
Reset palette. 205
Menu Setting Combinations. 207
Conserve paper and Auto rotation. 208
Enlarge/Reduce (Scaling) and Auto rotation. 210
Print centered and Cut to standard size. 211
Cut to standard size and Auto rotation and Enlarge/Reduce (Fit paper size). 213
Detect image size and Oversize. 216
Detect image size and Print centered. 218
Standard Size Table. 219
Status Print. 221
Changing Printer's Setting Using Web Browser. 223
Configuration Changes Using Web Browser. 224
Changeable Setting Items Using Web Browser. 227
Setting Password. 229
Registering Printer's Root Certificate to Web Browser for SSL Communication (Remote UI). 231
Registering Printer's Root Certificate to Local Computer for SSL Communication. 235
Generating Server Certificate (Self-signed Certificate). 241

Setting Mail Server. 244
Receiving Printer Status by E-mail. 246

Printer Parts. 248

Printer Parts. 249

Front. 250
Side. 252
Top Cover (Inside). 253
Roll Paper Cover (Inside). 255
Carriage. 256
Ink Tank Cover (Inside). 257
Stand. 258

Optional accessories. 260

Roll Holder Set. 261
Stand. 258

Network Setting. 264

Network Connection Tips. 266

Printer Connection Methods. 267
Default Network Settings. 270
Another Printer Found with Same Name. 272
Connecting to Another Computer via LAN/Changing from USB to LAN Connection. 273
Printing Network Settings. 274
Reconfiguration Method of LAN Connection/Reconfiguration Method of Wi-Fi Connection. 290
Reconfiguration of Network Settings using the Remote UI. 292
Network Status and Troubleshooting. 293

IJ Network Device Setup Utility (macOS). 295

IJ Network Device Setup Utility. 296
Starting Up IJ Network Device Setup Utility. 297
Diagnosing and Repairing Network Settings. 298
List of Models Which Does Not Support Diagnosis and Repair Function. 299
Other Network Information. 300

Technical Terms. 301
Restrictions. 309
Firewall. 310
List of Devices Which May Interfere with Wi-Fi Communication. 311

Sharing the Printer on a Network (macOS). 312
Settings on Print Server. 313
Settings on Client PC. 314
Restrictions on Printer Sharing. 315
Connecting Smartphone/Tablet to Printer via Wi-Fi. 316
Connecting Smartphone/Tablet to Printer via Wireless Router. 317
Adjustments for Better Print Quality. 320
Adjusting the Print Head. 321
Adjusting the Print Head. 322
Adjusting Line Misalignment. 323
Automatic Adjustment to Straighten Lines and Colors. 327
Manual Adjustment to Straighten Lines and Colors. 329
Troubleshooting Paper Abrasion and Blurry Images. 331
Adjusting Feed Amount. 333
Adjusting Feed Amount. 334
Selecting Feed Amount Adjustment Method. 335
Automatic Banding Adjustment. 336
Manual Banding Adjustment. 338
Fine-Tuning Paper Feed Amount. 340
Adjusting Line Length. 341
Adjusting Vacuum Strength. 343
Maintenance and Consumables. 344
Ink Tanks. 346
Ink Tanks. 347
Replacing Ink Tanks. 349
Checking Ink Tank Levels. 355
When to Replace Ink Tanks. 356
Print Head. 357
Print Head. 358
Checking for Nozzle Clogging. 359
Cleaning the Print Head. 361
Replacing the Print Head. 363

Maintenance Cartridge. 371
Maintenance Cartridge. 372
Replacing the Maintenance Cartridge. 373
Checking the Remaining Maintenance Cartridge Capacity. 377
When to Replace the Maintenance Cartridge. 378
Cutter Blade. 379
Cutter Blade. 380
Replacing the Cutter Blade. 381
Performing Maintenance Functions from Your Computer (macOS). 384
Opening Remote UI for Maintenance. 385
Cleaning the Print Heads. 386
Printing a Nozzle Check Pattern. 389
Cleaning the Printer. 390
Cleaning the Printer Exterior. 391
Cleaning Inside the Top Cover. 392
Other Maintenance. 396
Preparing to Transfer the Printer. 397
Reinstalling the Printer. 400
Firmware update. 405
Specifications. 406
Specifications. 407
Print Area. 411
Safety. 413
Safety Precautions. 414
Regulatory Information. 416
WEEE (EU&EEA). 418
When Repairing, Lending, or Disposing of the Printer. 431
Screenshots in This Manual. 432
Basic Printing Workflow. 433
Printing procedure. 434
Printing Options Using Rolls and Sheets. 435

Turning the Printer On and Off. 437
Loading and Printing on Rolls. 439
Loading and Printing on Sheets. 442
Printing in Windows. 444
Printing from macOS. 446
Canceling print jobs. 448
Canceling Print Jobs from the Operation Panel. 449
Canceling Print Jobs from Windows. 450
Canceling Print Jobs from macOS. 452
Pausing Printing. 453
Pausing Printing. 454
Enhanced Printing Options. 455
Printing from Computer (macOS). 459
Printing with Easy Setup. 460
Setting the Number of Copies and Printing Order. 466
Changing the Print Quality and Correcting Image Data. 468
Adjusting Color Balance. 469
Setting the Print Quality Level (Custom). 471
Printing a Color Document in Monochrome. 473
Specifying Color Correction. 475
Optimal Photo Printing of Image Data. 477
Adjusting Colors with the Printer Driver. 478
Printing with ICC Profiles (Specifying an ICC Profile from the Application Software). 480
Printing with ICC Profiles (Specifying an ICC Profile from the Printer Driver). 482
Adjusting Brightness. 483
Adjusting Contrast. 485
Scaled Printing. 487
Printing to Oversized Paper Sizes. 489
Setting Paper Dimensions (Custom Size). 491
Print Area. 493
Printing without Edges Based on the Scenarios. 495
Printing without Margins to Match Roll Paper Width. 496
Printing Full-Size without Margins. 499
Printing Hanging and Horizontal Banners (Large-Format Printing). 502

Printing by Dividing/Joining Documents. 504
Lining Up and Printing Multiple Documents. 505
Printing by Connecting Multiple Pages. 506
Printing Multiple Pages All on One Page. 508
Printing Document in Center of Paper. 510
Printing by Saving Roll Paper. 512
Saving Roll Paper by Rotating Document 90 Degrees. 513
Saving Roll Paper by Eliminating Upper and Lower Margins on Document. 514
Switching the Paper Source to Match the Purpose. 515
Cutting Roll Paper after Printing. 517
Printing Using AirPrint. 518
Printing from Smartphone/Tablet. 521
Connecting Smartphone/Tablet to Printer Directly (Wireless Direct). 522
Printing from iOS Device (AirPrint). 526
Windows Software. 530
Printing Using Canon Application Software. 531
macOS Software. 532
Printer Driver. 533
Overview of the Printer Driver. 534
Canon IJ Printer Driver. 535
Checking Layout in Preview before Printing. 536
Registering a Changed Printing Profile. 537
How to Open the Printer Driver Setup Dialog. 539
Page Setup Dialog. 540
Print Dialog. 541
Updating Media Information in Printer Driver. 543
Correcting Media Information in Printer Driver (When Printer Used in Shared Environment). . . . 545
Confirm the Printer Paper Information. 546
Setting Accounting Information. 547
Deleting the Undesired Print Job. 548
Displaying the Printing Status Screen. 549
Canon IJ Printer Utility2. 551
Opening the Canon IJ Printer Utility2. 552
Checking the Ink Status from Your Computer. 553

Instructions for Use (Printer Driver). 554
Description of Print Dialog. 555
Quality & Media. 556
Color Options. 558
Paper Detailed Settings. 560
Page Processing. 562
Specifications. 564
Updating the Printer Driver. 565
Obtaining the Latest Printer Driver. 566
Delete the Unnecessary Canon IJ Printer from the Printer List. 567
Before Installing the Printer Driver. 568
Installing the Printer Driver. 569
Printing Using Canon Application Software. 570
Managing Print Jobs. 571
Checking Print Job Information. 572
Basic Print Job Operations. 573
Managing Job Queue (Delete). 574
Frequently Asked Questions. 576
I want to easily create vertical or horizontal banners. 579
Does this printer support sub-ink tank system. 580
I want to know how to configure roll cutting. 581
I want to configure so that the roll is cut automatically after waiting for the ink to dry. . . 582
How do I print without borders. 583
I want to know the paper types that can be used in this printer. 584
The paper type that I want to print is not displayed on the Touch Screen. 585
Can I perform duplex printing. 586
I want to perform enlargement printing. 587
Network Settings and Common Problems. 588
Problems Regarding Paper. 589
Remove Jammed Roll Paper. 590
Remove a Jammed Sheet. 595
Remove Jammed Paper (Paper Feed Slot). 599
Roll paper cannot be inserted into the Paper Feed Slot. 602

Roll Paper Remains/Lacks under Quantity Management. 603
Cannot load sheets. 604
Paper is not cut straight. 605
Paper is not cut. 607
Cutter Blade Does Not Work While Cutting Is in Progress. 608
Dent in the Tip of Paper. 609
The size of clear film cannot be detected. 610
Printer Keeps Ejecting the Roll Paper. 611
Margins are wide. 614
When printing on roll paper, the printed surface becomes scratched. 615

Printing Does Not Start. 616

Printer Suddenly Stopped Working for Some Reason. 617
The Data lamp on the Operation Panel does not light up. 622
The printer does not respond even if print jobs are sent. 623
"Preparing the ink system." is displayed. 624
"Agitating the ink" is displayed. 625

The Printer Stops During a Print Job. 626

Printing stops and an error message is displayed. 627
The printer ejects blank, unprinted paper. 628

Problems with the Printing Quality. 629

Printing is faint. 630
Paper rubs against the Print Head. 632
The edges of the paper are dirty. 634
The surface of the paper is dirty. 636
The back side of the paper is dirty. 637
Immediately after borderless printing, the trailing edge margin is soiled during regular printing. 638
Printed colors are inaccurate. 639
Banding in different colors occurs. 640
Colors in printed images are uneven. 642
Image edges are blurred or white banding occurs. 644
The contrast becomes uneven during printing. 645
The length of printed images is inaccurate in the feeding direction. 646
Images are printed crooked. 647
Documents are printed in monochrome. 648
Line thickness is not uniform. 649
Lines or colors are misaligned. 650

Borders appear in borderless printing. 651
Cannot Print over Network. 652
Cannot Connect Printer to Network. 653
Cannot Print over TCP/IP Network. 654
Cannot Print over Bonjour networks. 655
Cannot Find Printer on Network. 656
Cannot Find Printer on Check Printer Settings Screen (Windows). 657
Cannot Proceed beyond Printer Connection Screen/Connect Cable Screen. 658
Searching Printer by IP Address or Host Name During Setup. 660
Cannot Find Printer while Using Wi-Fi. 664
Cannot Find Printer while Using Wired LAN. 667
Cannot Print Using AirPrint. 668
Installation Problems. 669
Removing Printer Software. 670
Taking Time to Setup Process (Windows). 672
Failed to Printer Driver Installation (Windows). 673
HP-GL/2 problems. 675
With HP-GL/2, printing is misaligned. 676
Lines or images are missing in printed HP-GL/2 jobs. 677
Lines are printed too thick or thin in HP-GL/2 print jobs. 678
HP-GL/2 jobs are printed in monochrome (or color). 679
Printed colors of lines are inaccurate during HP-GL/2 printing. 680
HP-GL/2 jobs are printed 6 mm larger than specified. 681
HP-GL/2 jobs are printed at maximum size, even if a standard size is specified. 682
HP-GL/2 printing takes a long time. 683
The printer stops when printing a HP-GL/2 job (the carriage stops moving). 684
Other Problems. 685
Printer does not turn on. 686
If the Printer Makes a Strange Sound. 687
Messages advising to check the maintenance cartridge are not cleared. 689
Printer consumes a lot of ink. 690
Printed pages are not collected cleanly in the basket. 691
Ink Level Detection. 692
List of Support Code for Error. 693

1005. 695
100A. 696
1012. 697
1021. 698
1024. 699
1041. 701
1051. 702
1052. 703
1054. 704
1055. 705
1056. 706
1057. 707
1058. 708
1061. 709
1200. 710
1201. 711
1210. 712
1213. 713
1214. 714
1300. 715
1306. 716
1317. 717
1322. 718
1323. 719
1324. 720
1401. 721
1403. 722
1408. 723
1409. 724
140A. 725
140B. 726
140C. 727
140F. 728

1468. 729
1477. 730
1478. 731
1480. 732
1481. 733
1485. 734
1492. 735
1494. 736
1495. 737
1500. 738
1551. 739
1552. 740
1570. 741
1571. 742
1660. 743
168B. 744
1720. 745
1721. 746
1722. 747
1730. 748
1731. 749
1752. 750
1753. 751
1756. 752
1757. 753
2130. 754
2131. 755
2132. 756
3000. 757
3001. 758
3200. 759
3201. 760
3250. 761

3300. 762
3301. 763
3302. 764
3303. 765
3304. 766
3306. 767
3311. 768
3312. 769
3313. 770
3314. 771
3315. 772
3316. 773
3317. 774
3331. 775
3332. 776
3333. 777
3337. 778
3340. 779
3341. 780
3414. 781
3415. 782
3416. 783
3417. 784
3418. 785
3419. 786
3420. 787
3421. 788
3422. 789
3423. 790
3424. 791
3448. 792
4111. 793
4113. 794

4114. 795
4115. 796
4116. 797
4117. 798
4801. 799
4803. 800
4905. 801
4910. 802
4911. 803
4913. 804
4920. 805
4931. 807
4932. 808
4933. 809
4934. 810
4935. 811
4937. 812
4950. 813
4951. 814
4952. 815
4953. 816
4954. 817
4955. 818
4956. 819
4957. 820
5106. 821
5200. 822
5B16. 823
5B20. 824
5B21. 825
5C00. 826
6502. 827
6700. 828

6702. 829
6820. 830
6900. 831
6901. 832
6902. 833
6910. 834
6911. 835
6920. 836
6921. 837
6930. 838
6931. 839
6932. 840
6933. 841
6940. 842
6941. 843
6942. 844
6943. 845
6944. 846
6945. 847
6946. 848
7050. 849
7051. 850
7052. 851
8200. 852
9000. 853
9110. 854
B20A. 855
B510. 856

Using This Online Manual

- Symbols Used in This Document
- Touch-enabled Device Users (Windows)

Symbols Used in This Document

Warning

Instructions that, if ignored, could result in death, serious personal injury, or property damage caused by incorrect operation of the equipment. These must be observed for safe operation.

Caution

Instructions that, if ignored, could result in personal injury or property damage caused by incorrect operation of the equipment. These must be observed for safe operation.

Important

Instructions including important information that must be observed to avoid damage and injury or improper use of the product. Be sure to read these instructions.

Note

Instructions including notes for operation and additional explanations.

Basics

Instructions explaining basic operations of your product.

Note

- Icons may vary depending on your product.

Touch-enabled Device Users (Windows)

For touch actions, you need to replace "right-click" in this document with the action set on the operating system. For example, if the action is set to "press and hold" on your operating system, replace "right-click" with "press and hold."

Trademarks and Licenses

- Microsoft is a registered trademark of Microsoft Corporation.
- Windows is a trademark or registered trademark of Microsoft Corporation in the U.S. and/or other countries.
- Windows Vista is a trademark or registered trademark of Microsoft Corporation in the U.S. and/or other countries.
- Internet Explorer is a trademark or registered trademark of Microsoft Corporation in the U.S. and/or other countries.
- Mac, Mac OS, macOS, OS X, AirPort, App Store, AirPrint, the AirPrint logo, Safari, Bonjour, iPad, iPhone and iPod touch are trademarks of Apple Inc., registered in the U.S. and other countries.
- IOS is a trademark or registered trademark of Cisco in the U.S. and other countries and is used under license.
- Google Cloud Print, Google Chrome, Chrome OS, Chromebook, Android, Google Drive, Google Apps and Google Analytics are either registered trademarks or trademarks of Google Inc. Google Play and Google Play Logo are trademarks of Google LLC.
- Adobe, Acrobat, Flash, Photoshop, Photoshop Elements, Lightroom, Adobe RGB and Adobe RGB (1998) are either registered trademarks or trademarks of Adobe Systems Incorporated in the United States and/or other countries.
- Bluetooth is a trademark of Bluetooth SIG, Inc., U.S.A. and licensed to Canon Inc.
- Autodesk and AutoCAD are registered trademarks or trademarks of Autodesk, Inc., and/or its subsidiaries and/or affiliates in the USA and/or other countries.

Note

- The formal name of Windows Vista is Microsoft Windows Vista operating system.

Copyright (c) 2003-2015 Apple Inc. All rights reserved.

Redistribution and use in source and binary forms, with or without modification, are permitted provided that the following conditions are met:

1. Redistributions of source code must retain the above copyright notice, this list of conditions and the following disclaimer.
2. Redistributions in binary form must reproduce the above copyright notice, this list of conditions and the following disclaimer in the documentation and/or other materials provided with the distribution.
3. Neither the name of Apple Inc. ("Apple") nor the names of its contributors may be used to endorse or promote products derived from this software without specific prior written permission.

THIS SOFTWARE IS PROVIDED BY APPLE AND ITS CONTRIBUTORS "AS IS" AND ANY EXPRESS OR IMPLIED WARRANTIES, INCLUDING, BUT NOT LIMITED TO, THE IMPLIED WARRANTIES OF MERCHANTABILITY AND FITNESS FOR A PARTICULAR PURPOSE ARE DISCLAIMED. IN NO EVENT SHALL APPLE OR ITS CONTRIBUTORS BE LIABLE FOR ANY DIRECT, INDIRECT, INCIDENTAL, SPECIAL, EXEMPLARY, OR CONSEQUENTIAL DAMAGES (INCLUDING, BUT NOT LIMITED TO, PROCUREMENT OF SUBSTITUTE GOODS OR SERVICES; LOSS OF USE, DATA, OR PROFITS; OR BUSINESS INTERRUPTION) HOWEVER CAUSED AND ON ANY THEORY OF LIABILITY, WHETHER IN CONTRACT, STRICT LIABILITY, OR TORT (INCLUDING NEGLIGENCE OR OTHERWISE) ARISING IN ANY WAY OUT OF THE USE OF THIS SOFTWARE, EVEN IF ADVISED OF THE POSSIBILITY OF SUCH DAMAGE.

Apache License

Version 2.0, January 2004

http://www.apache.org/licenses/

TERMS AND CONDITIONS FOR USE, REPRODUCTION, AND DISTRIBUTION

1. Definitions.

   "License" shall mean the terms and conditions for use, reproduction, and distribution as defined by Sections 1 through 9 of this document.

   "Licensor" shall mean the copyright owner or entity authorized by the copyright owner that is granting the License.

   "Legal Entity" shall mean the union of the acting entity and all other entities that control, are controlled by, or are under common control with that entity. For the purposes of this definition, "control" means (i) the power, direct or indirect, to cause the direction or management of such entity, whether by contract or otherwise, or (ii) ownership of fifty percent (50%) or more of the outstanding shares, or (iii) beneficial ownership of such entity.

   "You" (or "Your") shall mean an individual or Legal Entity exercising permissions granted by this License.

   "Source" form shall mean the preferred form for making modifications, including but not limited to software source code, documentation source, and configuration files.

   "Object" form shall mean any form resulting from mechanical transformation or translation of a Source form, including but not limited to compiled object code, generated documentation, and conversions to other media types.

   "Work" shall mean the work of authorship, whether in Source or Object form, made available under the License, as indicated by a copyright notice that is included in or attached to the work (an example is provided in the Appendix below).

   "Derivative Works" shall mean any work, whether in Source or Object form, that is based on (or derived from) the Work and for which the editorial revisions, annotations, elaborations, or other modifications represent, as a whole, an original work of authorship. For the purposes of this License, Derivative Works shall not include works that remain separable from, or merely link (or bind by name) to the interfaces of, the Work and Derivative Works thereof.

   "Contribution" shall mean any work of authorship, including the original version of the Work and any modifications or additions to that Work or Derivative Works thereof, that is intentionally submitted to Licensor for inclusion in the Work by the copyright owner or by an individual or Legal Entity authorized to submit on behalf of the copyright owner. For the purposes of this definition, "submitted" means any form of electronic, verbal, or written communication sent to the Licensor or its representatives, including but not limited to communication on electronic mailing lists, source code control systems, and issue tracking systems that are managed by, or on behalf of, the Licensor for the purpose of discussing and improving the Work, but excluding communication that is conspicuously marked or otherwise designated in writing by the copyright owner as "Not a Contribution."

   "Contributor" shall mean Licensor and any individual or Legal Entity on behalf of whom a Contribution has been received by Licensor and subsequently incorporated within the Work.

2. Grant of Copyright License. Subject to the terms and conditions of this License, each Contributor hereby grants to You a perpetual, worldwide, non-exclusive, no-charge, royalty-free, irrevocable copyright license to reproduce, prepare Derivative Works of, publicly display, publicly perform, sublicense, and distribute the Work and such Derivative Works in Source or Object form.
3. Grant of Patent License. Subject to the terms and conditions of this License, each Contributor hereby grants to You a perpetual, worldwide, non-exclusive, no-charge, royalty-free, irrevocable (except as stated in this section) patent license to make, have made, use, offer to sell, sell, import, and otherwise transfer the Work, where such license applies only to those patent claims licensable by such Contributor that are necessarily infringed by their Contribution(s) alone or by combination of their Contribution(s) with the Work to which such Contribution(s) was submitted. If You institute patent litigation against any entity (including a cross-claim or counterclaim in a lawsuit) alleging that the Work or a Contribution incorporated within the Work constitutes direct or contributory patent infringement, then any patent licenses granted to You under this License for that Work shall terminate as of the date such litigation is filed.
4. Redistribution. You may reproduce and distribute copies of the Work or Derivative Works thereof in any medium, with or without modifications, and in Source or Object form, provided that You meet the following conditions:

    1. You must give any other recipients of the Work or Derivative Works a copy of this License; and
    2. You must cause any modified files to carry prominent notices stating that You changed the files; and
    3. You must retain, in the Source form of any Derivative Works that You distribute, all copyright, patent, trademark, and attribution notices from the Source form of the Work, excluding those notices that do not pertain to any part of the Derivative Works; and
    4. If the Work includes a "NOTICE" text file as part of its distribution, then any Derivative Works that You distribute must include a readable copy of the attribution notices contained within such NOTICE file, excluding those notices that do not pertain to any part of the Derivative Works, in at least one of the following places: within a NOTICE text file distributed as part of the Derivative Works; within the Source form or documentation, if provided along with the Derivative Works; or, within a display generated by the Derivative Works, if and wherever such third-party notices normally appear. The contents of the NOTICE file are for informational purposes only and do not modify the License. You may add Your own attribution notices within Derivative Works that You distribute, alongside or as an addendum to the NOTICE text from the Work, provided that such additional attribution notices cannot be construed as modifying the License.

    You may add Your own copyright statement to Your modifications and may provide additional or different license terms and conditions for use, reproduction, or distribution of Your modifications, or for any such Derivative Works as a whole, provided Your use, reproduction, and distribution of the Work otherwise complies with the conditions stated in this License.

5. Submission of Contributions. Unless You explicitly state otherwise, any Contribution intentionally submitted for inclusion in the Work by You to the Licensor shall be under the terms and conditions of this License, without any additional terms or conditions. Notwithstanding the above, nothing herein shall supersede or modify the terms of any separate license agreement you may have executed with Licensor regarding such Contributions.
6. Trademarks. This License does not grant permission to use the trade names, trademarks, service marks, or product names of the Licensor, except as required for reasonable and customary use in describing the origin of the Work and reproducing the content of the NOTICE file.

7. Disclaimer of Warranty. Unless required by applicable law or agreed to in writing, Licensor provides the Work (and each Contributor provides its Contributions) on an "AS IS" BASIS, WITHOUT WARRANTIES OR CONDITIONS OF ANY KIND, either express or implied, including, without limitation, any warranties or conditions of TITLE, NON-INFRINGEMENT, MERCHANTABILITY, or FITNESS FOR A PARTICULAR PURPOSE. You are solely responsible for determining the appropriateness of using or redistributing the Work and assume any risks associated with Your exercise of permissions under this License.
8. Limitation of Liability. In no event and under no legal theory, whether in tort (including negligence), contract, or otherwise, unless required by applicable law (such as deliberate and grossly negligent acts) or agreed to in writing, shall any Contributor be liable to You for damages, including any direct, indirect, special, incidental, or consequential damages of any character arising as a result of this License or out of the use or inability to use the Work (including but not limited to damages for loss of goodwill, work stoppage, computer failure or malfunction, or any and all other commercial damages or losses), even if such Contributor has been advised of the possibility of such damages.
9. Accepting Warranty or Additional Liability. While redistributing the Work or Derivative Works thereof, You may choose to offer, and charge a fee for, acceptance of support, warranty, indemnity, or other liability obligations and/or rights consistent with this License. However, in accepting such obligations, You may act only on Your own behalf and on Your sole responsibility, not on behalf of any other Contributor, and only if You agree to indemnify, defend, and hold each Contributor harmless for any liability incurred by, or claims asserted against, such Contributor by reason of your accepting any such warranty or additional liability.
END OF TERMS AND CONDITIONS

---- Part 1: CMU/UCD copyright notice: (BSD like) -----

Copyright 1989, 1991, 1992 by Carnegie Mellon University

Derivative Work - 1996, 1998-2000

Copyright 1996, 1998-2000 The Regents of the University of California

All Rights Reserved

Permission to use, copy, modify and distribute this software and its documentation for any purpose and without fee is hereby granted, provided that the above copyright notice appears in all copies and that both that copyright notice and this permission notice appear in supporting documentation, and that the name of CMU and The Regents of the University of California not be used in advertising or publicity pertaining to distribution of the software without specific written permission.

CMU AND THE REGENTS OF THE UNIVERSITY OF CALIFORNIA DISCLAIM ALL WARRANTIES WITH REGARD TO THIS SOFTWARE, INCLUDING ALL IMPLIED WARRANTIES OF MERCHANTABILITY AND FITNESS. IN NO EVENT SHALL CMU OR THE REGENTS OF THE UNIVERSITY OF CALIFORNIA BE LIABLE FOR ANY SPECIAL, INDIRECT OR CONSEQUENTIAL DAMAGES OR ANY DAMAGES WHATSOEVER RESULTING FROM THE LOSS OF USE, DATA OR PROFITS, WHETHER IN AN ACTION OF CONTRACT, NEGLIGENCE OR OTHER TORTIOUS ACTION, ARISING OUT OF OR IN CONNECTION WITH THE USE OR PERFORMANCE OF THIS SOFTWARE.

---- Part 2: Networks Associates Technology, Inc copyright notice (BSD) -----

Copyright (c) 2001-2003, Networks Associates Technology, Inc

All rights reserved.

Redistribution and use in source and binary forms, with or without modification, are permitted provided that the following conditions are met:

* Redistributions of source code must retain the above copyright notice, this list of conditions and the following disclaimer.
* Redistributions in binary form must reproduce the above copyright notice, this list of conditions and the following disclaimer in the documentation and/or other materials provided with the distribution.
* Neither the name of the Networks Associates Technology, Inc nor the names of its contributors may be used to endorse or promote products derived from this software without specific prior written permission.

THIS SOFTWARE IS PROVIDED BY THE COPYRIGHT HOLDERS AND CONTRIBUTORS ``AS IS'' AND ANY EXPRESS OR IMPLIED WARRANTIES, INCLUDING, BUT NOT LIMITED TO, THE IMPLIED WARRANTIES OF MERCHANTABILITY AND FITNESS FOR A PARTICULAR PURPOSE ARE DISCLAIMED. IN NO EVENT SHALL THE COPYRIGHT HOLDERS OR CONTRIBUTORS BE LIABLE FOR ANY DIRECT, INDIRECT, INCIDENTAL, SPECIAL, EXEMPLARY, OR CONSEQUENTIAL DAMAGES (INCLUDING, BUT NOT LIMITED TO, PROCUREMENT OF SUBSTITUTE GOODS OR SERVICES; LOSS OF USE, DATA, OR PROFITS; OR BUSINESS INTERRUPTION) HOWEVER CAUSED AND ON ANY THEORY OF LIABILITY, WHETHER IN CONTRACT, STRICT LIABILITY, OR TORT (INCLUDING NEGLIGENCE OR OTHERWISE) ARISING IN ANY WAY OUT OF THE USE OF THIS SOFTWARE, EVEN IF ADVISED OF THE POSSIBILITY OF SUCH DAMAGE.

---- Part 3: Cambridge Broadband Ltd. copyright notice (BSD) -----

Portions of this code are copyright (c) 2001-2003, Cambridge Broadband Ltd.

All rights reserved.

Redistribution and use in source and binary forms, with or without modification, are permitted provided that the following conditions are met:

* Redistributions of source code must retain the above copyright notice, this list of conditions and the following disclaimer.
* Redistributions in binary form must reproduce the above copyright notice, this list of conditions and the following disclaimer in the documentation and/or other materials provided with the distribution.
* The name of Cambridge Broadband Ltd. may not be used to endorse or promote products derived from this software without specific prior written permission.

THIS SOFTWARE IS PROVIDED BY THE COPYRIGHT HOLDER ``AS IS'' AND ANY EXPRESS OR IMPLIED WARRANTIES, INCLUDING, BUT NOT LIMITED TO, THE IMPLIED WARRANTIES OF MERCHANTABILITY AND FITNESS FOR A PARTICULAR PURPOSE ARE DISCLAIMED. IN NO EVENT SHALL THE COPYRIGHT HOLDER BE LIABLE FOR ANY DIRECT, INDIRECT, INCIDENTAL, SPECIAL, EXEMPLARY, OR CONSEQUENTIAL DAMAGES (INCLUDING, BUT NOT LIMITED TO, PROCUREMENT OF SUBSTITUTE GOODS OR SERVICES; LOSS OF USE, DATA, OR PROFITS; OR BUSINESS INTERRUPTION) HOWEVER CAUSED AND ON ANY THEORY OF LIABILITY, WHETHER IN CONTRACT, STRICT LIABILITY, OR TORT (INCLUDING NEGLIGENCE OR OTHERWISE) ARISING IN ANY WAY OUT OF THE USE OF THIS SOFTWARE, EVEN IF ADVISED OF THE POSSIBILITY OF SUCH DAMAGE.

---- Part 4: Sun Microsystems, Inc. copyright notice (BSD) -----

Copyright c 2003 Sun Microsystems, Inc., 4150 Network Circle, Santa Clara, California 95054, U.S.A. All rights reserved.

Use is subject to license terms below.

This distribution may include materials developed by third parties.

Sun, Sun Microsystems, the Sun logo and Solaris are trademarks or registered trademarks of Sun Microsystems, Inc. in the U.S. and other countries.

Redistribution and use in source and binary forms, with or without modification, are permitted provided that the following conditions are met:

* Redistributions of source code must retain the above copyright notice, this list of conditions and the following disclaimer.
* Redistributions in binary form must reproduce the above copyright notice, this list of conditions and the following disclaimer in the documentation and/or other materials provided with the distribution.
* Neither the name of the Sun Microsystems, Inc. nor the names of its contributors may be used to endorse or promote products derived from this software without specific prior written permission.

THIS SOFTWARE IS PROVIDED BY THE COPYRIGHT HOLDERS AND CONTRIBUTORS ``AS IS'' AND ANY EXPRESS OR IMPLIED WARRANTIES, INCLUDING, BUT NOT LIMITED TO, THE IMPLIED WARRANTIES OF MERCHANTABILITY AND FITNESS FOR A PARTICULAR PURPOSE ARE DISCLAIMED. IN NO EVENT SHALL THE COPYRIGHT HOLDERS OR CONTRIBUTORS BE LIABLE FOR ANY DIRECT, INDIRECT, INCIDENTAL, SPECIAL, EXEMPLARY, OR CONSEQUENTIAL DAMAGES (INCLUDING, BUT NOT LIMITED TO, PROCUREMENT OF SUBSTITUTE GOODS OR SERVICES; LOSS OF USE, DATA, OR PROFITS; OR BUSINESS INTERRUPTION) HOWEVER CAUSED AND ON ANY THEORY OF LIABILITY, WHETHER IN CONTRACT, STRICT LIABILITY, OR TORT (INCLUDING NEGLIGENCE OR OTHERWISE) ARISING IN ANY WAY OUT OF THE USE OF THIS SOFTWARE, EVEN IF ADVISED OF THE POSSIBILITY OF SUCH DAMAGE.

---- Part 5: Sparta, Inc copyright notice (BSD) -----

Copyright (c) 2003-2012, Sparta, Inc

All rights reserved.

Redistribution and use in source and binary forms, with or without modification, are permitted provided that the following conditions are met:

* Redistributions of source code must retain the above copyright notice, this list of conditions and the following disclaimer.
* Redistributions in binary form must reproduce the above copyright notice, this list of conditions and the following disclaimer in the documentation and/or other materials provided with the distribution.
* Neither the name of Sparta, Inc nor the names of its contributors may be used to endorse or promote products derived from this software without specific prior written permission.

THIS SOFTWARE IS PROVIDED BY THE COPYRIGHT HOLDERS AND CONTRIBUTORS ``AS IS'' AND ANY EXPRESS OR IMPLIED WARRANTIES, INCLUDING, BUT NOT LIMITED TO, THE IMPLIED WARRANTIES OF MERCHANTABILITY AND FITNESS FOR A PARTICULAR PURPOSE ARE DISCLAIMED. IN NO EVENT SHALL THE COPYRIGHT HOLDERS OR CONTRIBUTORS BE LIABLE FOR ANY DIRECT, INDIRECT, INCIDENTAL, SPECIAL, EXEMPLARY, OR CONSEQUENTIAL DAMAGES (INCLUDING, BUT NOT LIMITED TO, PROCUREMENT OF SUBSTITUTE GOODS OR SERVICES; LOSS OF USE, DATA, OR PROFITS; OR BUSINESS INTERRUPTION) HOWEVER CAUSED AND ON ANY THEORY OF LIABILITY, WHETHER IN CONTRACT, STRICT LIABILITY, OR

TORT (INCLUDING NEGLIGENCE OR OTHERWISE) ARISING IN ANY WAY OUT OF THE USE OF THIS SOFTWARE, EVEN IF ADVISED OF THE POSSIBILITY OF SUCH DAMAGE.

---- Part 6: Cisco/BUPTNIC copyright notice (BSD) -----

Copyright (c) 2004, Cisco, Inc and Information Network Center of Beijing University of Posts and Telecommunications.

All rights reserved.

Redistribution and use in source and binary forms, with or without modification, are permitted provided that the following conditions are met:

* Redistributions of source code must retain the above copyright notice, this list of conditions and the following disclaimer.
* Redistributions in binary form must reproduce the above copyright notice, this list of conditions and the following disclaimer in the documentation and/or other materials provided with the distribution.
* Neither the name of Cisco, Inc, Beijing University of Posts and Telecommunications, nor the names of their contributors may be used to endorse or promote products derived from this software without specific prior written permission.

THIS SOFTWARE IS PROVIDED BY THE COPYRIGHT HOLDERS AND CONTRIBUTORS ``AS IS'' AND ANY EXPRESS OR IMPLIED WARRANTIES, INCLUDING, BUT NOT LIMITED TO, THE IMPLIED WARRANTIES OF MERCHANTABILITY AND FITNESS FOR A PARTICULAR PURPOSE ARE DISCLAIMED. IN NO EVENT SHALL THE COPYRIGHT HOLDERS OR CONTRIBUTORS BE LIABLE FOR ANY DIRECT, INDIRECT, INCIDENTAL, SPECIAL, EXEMPLARY, OR CONSEQUENTIAL DAMAGES (INCLUDING, BUT NOT LIMITED TO, PROCUREMENT OF SUBSTITUTE GOODS OR SERVICES; LOSS OF USE, DATA, OR PROFITS; OR BUSINESS INTERRUPTION) HOWEVER CAUSED AND ON ANY THEORY OF LIABILITY, WHETHER IN CONTRACT, STRICT LIABILITY, OR TORT (INCLUDING NEGLIGENCE OR OTHERWISE) ARISING IN ANY WAY OUT OF THE USE OF THIS SOFTWARE, EVEN IF ADVISED OF THE POSSIBILITY OF SUCH DAMAGE.

---- Part 7: Fabasoft R&D Software GmbH & Co KG copyright notice (BSD) -----

Copyright (c) Fabasoft R&D Software GmbH & Co KG, 2003 oss@fabasoft.com

Author: Bernhard Penz <bernhard.penz@fabasoft.com>

Redistribution and use in source and binary forms, with or without modification, are permitted provided that the following conditions are met:

* Redistributions of source code must retain the above copyright notice, this list of conditions and the following disclaimer.
* Redistributions in binary form must reproduce the above copyright notice, this list of conditions and the following disclaimer in the documentation and/or other materials provided with the distribution.
* The name of Fabasoft R&D Software GmbH & Co KG or any of its subsidiaries, brand or product names may not be used to endorse or promote products derived from this software without specific prior written permission.

THIS SOFTWARE IS PROVIDED BY THE COPYRIGHT HOLDER ``AS IS'' AND ANY EXPRESS OR IMPLIED WARRANTIES, INCLUDING, BUT NOT LIMITED TO, THE IMPLIED WARRANTIES OF MERCHANTABILITY AND FITNESS FOR A PARTICULAR PURPOSE ARE DISCLAIMED. IN NO EVENT SHALL THE COPYRIGHT HOLDER BE LIABLE FOR ANY DIRECT, INDIRECT, INCIDENTAL,

SPECIAL, EXEMPLARY, OR CONSEQUENTIAL DAMAGES (INCLUDING, BUT NOT LIMITED TO, PROCUREMENT OF SUBSTITUTE GOODS OR SERVICES; LOSS OF USE, DATA, OR PROFITS; OR BUSINESS INTERRUPTION) HOWEVER CAUSED AND ON ANY THEORY OF LIABILITY, WHETHER IN CONTRACT, STRICT LIABILITY, OR TORT (INCLUDING NEGLIGENCE OR OTHERWISE) ARISING IN ANY WAY OUT OF THE USE OF THIS SOFTWARE, EVEN IF ADVISED OF THE POSSIBILITY OF SUCH DAMAGE.

---- Part 8: Apple Inc. copyright notice (BSD) -----

Copyright (c) 2007 Apple Inc. All rights reserved.

Redistribution and use in source and binary forms, with or without modification, are permitted provided that the following conditions are met:

1. Redistributions of source code must retain the above copyright notice, this list of conditions and the following disclaimer.
2. Redistributions in binary form must reproduce the above copyright notice, this list of conditions and the following disclaimer in the documentation and/or other materials provided with the distribution.
3. Neither the name of Apple Inc. ("Apple") nor the names of its contributors may be used to endorse or promote products derived from this software without specific prior written permission.

THIS SOFTWARE IS PROVIDED BY APPLE AND ITS CONTRIBUTORS "AS IS" AND ANY EXPRESS OR IMPLIED WARRANTIES, INCLUDING, BUT NOT LIMITED TO, THE IMPLIED WARRANTIES OF MERCHANTABILITY AND FITNESS FOR A PARTICULAR PURPOSE ARE DISCLAIMED. IN NO EVENT SHALL APPLE OR ITS CONTRIBUTORS BE LIABLE FOR ANY DIRECT, INDIRECT, INCIDENTAL, SPECIAL, EXEMPLARY, OR CONSEQUENTIAL DAMAGES (INCLUDING, BUT NOT LIMITED TO, PROCUREMENT OF SUBSTITUTE GOODS OR SERVICES; LOSS OF USE, DATA, OR PROFITS; OR BUSINESS INTERRUPTION) HOWEVER CAUSED AND ON ANY THEORY OF LIABILITY, WHETHER IN CONTRACT, STRICT LIABILITY, OR TORT (INCLUDING NEGLIGENCE OR OTHERWISE) ARISING IN ANY WAY OUT OF THE USE OF THIS SOFTWARE, EVEN IF ADVISED OF THE POSSIBILITY OF SUCH DAMAGE.

---- Part 9: ScienceLogic, LLC copyright notice (BSD) -----

Copyright (c) 2009, ScienceLogic, LLC

All rights reserved.

Redistribution and use in source and binary forms, with or without modification, are permitted provided that the following conditions are met:

* Redistributions of source code must retain the above copyright notice, this list of conditions and the following disclaimer.
* Redistributions in binary form must reproduce the above copyright notice, this list of conditions and the following disclaimer in the documentation and/or other materials provided with the distribution.
* Neither the name of ScienceLogic, LLC nor the names of its contributors may be used to endorse or promote products derived from this software without specific prior written permission.

THIS SOFTWARE IS PROVIDED BY THE COPYRIGHT HOLDERS AND CONTRIBUTORS "AS IS" AND ANY EXPRESS OR IMPLIED WARRANTIES, INCLUDING, BUT NOT LIMITED TO, THE IMPLIED WARRANTIES OF MERCHANTABILITY AND FITNESS FOR A PARTICULAR PURPOSE ARE DISCLAIMED. IN NO EVENT SHALL THE COPYRIGHT HOLDERS OR CONTRIBUTORS BE LIABLE

FOR ANY DIRECT, INDIRECT, INCIDENTAL, SPECIAL, EXEMPLARY, OR CONSEQUENTIAL DAMAGES (INCLUDING, BUT NOT LIMITED TO, PROCUREMENT OF SUBSTITUTE GOODS OR SERVICES; LOSS OF USE, DATA, OR PROFITS; OR BUSINESS INTERRUPTION) HOWEVER CAUSED AND ON ANY THEORY OF LIABILITY, WHETHER IN CONTRACT, STRICT LIABILITY, OR TORT (INCLUDING NEGLIGENCE OR OTHERWISE) ARISING IN ANY WAY OUT OF THE USE OF THIS SOFTWARE, EVEN IF ADVISED OF THE POSSIBILITY OF SUCH DAMAGE.

LEADTOOLS

Copyright (C) 1991-2009 LEAD Technologies, Inc.

CMap Resources

Copyright 1990-2009 Adobe Systems Incorporated.
All rights reserved.

Copyright 1990-2010 Adobe Systems Incorporated.
All rights reserved.

Redistribution and use in source and binary forms, with or without modification, are permitted provided that the following conditions are met:

Redistributions of source code must retain the above copyright notice, this list of conditions and the following disclaimer.

Redistributions in binary form must reproduce the above copyright notice, this list of conditions and the following disclaimer in the documentation and/or other materials provided with the distribution.

Neither the name of Adobe Systems Incorporated nor the names of its contributors may be used to endorse or promote products derived from this software without specific prior written permission.

THIS SOFTWARE IS PROVIDED BY THE COPYRIGHT HOLDERS AND CONTRIBUTORS "AS IS" AND ANY EXPRESS OR IMPLIED WARRANTIES, INCLUDING, BUT NOT LIMITED TO, THE IMPLIED WARRANTIES OF MERCHANTABILITY AND FITNESS FOR A PARTICULAR PURPOSE ARE DISCLAIMED. IN NO EVENT SHALL THE COPYRIGHT HOLDER OR CONTRIBUTORS BE LIABLE FOR ANY DIRECT, INDIRECT, INCIDENTAL, SPECIAL, EXEMPLARY, OR CONSEQUENTIAL DAMAGES (INCLUDING, BUT NOT LIMITED TO, PROCUREMENT OF SUBSTITUTE GOODS OR SERVICES; LOSS OF USE, DATA, OR PROFITS; OR BUSINESS INTERRUPTION) HOWEVER CAUSED AND ON ANY THEORY OF LIABILITY, WHETHER IN CONTRACT, STRICT LIABILITY, OR TORT (INCLUDING NEGLIGENCE OR OTHERWISE) ARISING IN ANY WAY OUT OF THE USE OF THIS SOFTWARE, EVEN IF ADVISED OF THE POSSIBILITY OF SUCH DAMAGE.

MIT License

Copyright (c) 1998, 1999, 2000 Thai Open Source Software Center Ltd

Permission is hereby granted, free of charge, to any person obtaining a copy of this software and associated documentation files (the "Software"), to deal in the Software without restriction, including without limitation the rights to use, copy, modify, merge, publish, distribute, sublicense, and/or sell copies of the Software, and to permit persons to whom the Software is furnished to do so, subject to the following conditions:

The above copyright notice and this permission notice shall be included in all copies or substantial portions of the Software.

THE SOFTWARE IS PROVIDED "AS IS", WITHOUT WARRANTY OF ANY KIND, EXPRESS OR IMPLIED, INCLUDING BUT NOT LIMITED TO THE WARRANTIES OF MERCHANTABILITY, FITNESS FOR A PARTICULAR PURPOSE AND NONINFRINGEMENT. IN NO EVENT SHALL THE AUTHORS OR COPYRIGHT HOLDERS BE LIABLE FOR ANY CLAIM, DAMAGES OR OTHER LIABILITY, WHETHER IN AN ACTION OF CONTRACT, TORT OR OTHERWISE, ARISING FROM, OUT OF OR IN CONNECTION WITH THE SOFTWARE OR THE USE OR OTHER DEALINGS IN THE SOFTWARE.

Copyright 2000 Computing Research Labs, New Mexico State University

Copyright 2001-2015 Francesco Zappa Nardelli

Permission is hereby granted, free of charge, to any person obtaining a copy of this software and associated documentation files (the "Software"), to deal in the Software without restriction, including without limitation the rights to use, copy, modify, merge, publish, distribute, sublicense, and/or sell copies of the Software, and to permit persons to whom the Software is furnished to do so, subject to the following conditions:

The above copyright notice and this permission notice shall be included in all copies or substantial portions of the Software.

THE SOFTWARE IS PROVIDED "AS IS", WITHOUT WARRANTY OF ANY KIND, EXPRESS OR IMPLIED, INCLUDING BUT NOT LIMITED TO THE WARRANTIES OF MERCHANTABILITY, FITNESS FOR A PARTICULAR PURPOSE AND NONINFRINGEMENT. IN NO EVENT SHALL THE COMPUTING RESEARCH LAB OR NEW MEXICO STATE UNIVERSITY BE LIABLE FOR ANY CLAIM, DAMAGES OR OTHER LIABILITY, WHETHER IN AN ACTION OF CONTRACT, TORT OR OTHERWISE, ARISING FROM, OUT OF OR IN CONNECTION WITH THE SOFTWARE OR THE USE OR OTHER DEALINGS IN THE SOFTWARE.

Written by Joel Sherrill <joel@OARcorp.com>.

COPYRIGHT (c) 1989-2000.

On-Line Applications Research Corporation (OAR).

Permission to use, copy, modify, and distribute this software for any purpose without fee is hereby granted, provided that this entire notice is included in all copies of any software which is or includes a copy or modification of this software.

THIS SOFTWARE IS BEING PROVIDED "AS IS", WITHOUT ANY EXPRESS OR IMPLIED WARRANTY. IN PARTICULAR, THE AUTHOR MAKES NO REPRESENTATION OR WARRANTY OF ANY KIND

CONCERNING THE MERCHANTABILITY OF THIS SOFTWARE OR ITS FITNESS FOR ANY PARTICULAR PURPOSE.

(1) Red Hat Incorporated

Copyright (c) 1994-2009 Red Hat, Inc. All rights reserved.

This copyrighted material is made available to anyone wishing to use, modify, copy, or redistribute it subject to the terms and conditions of the BSD License. This program is distributed in the hope that it will be useful, but WITHOUT ANY WARRANTY expressed or implied, including the implied warranties of MERCHANTABILITY or FITNESS FOR A PARTICULAR PURPOSE. A copy of this license is available at http://www.opensource.org/licenses. Any Red Hat trademarks that are incorporated in the source code or documentation are not subject to the BSD License and may only be used or replicated with the express permission of Red Hat, Inc.

(2) University of California, Berkeley

Copyright (c) 1981-2000 The Regents of the University of California.

All rights reserved.

Redistribution and use in source and binary forms, with or without modification, are permitted provided that the following conditions are met:

* Redistributions of source code must retain the above copyright notice, this list of conditions and the following disclaimer.
* Redistributions in binary form must reproduce the above copyright notice, this list of conditions and the following disclaimer in the documentation and/or other materials provided with the distribution.
* Neither the name of the University nor the names of its contributors may be used to endorse or promote products derived from this software without specific prior written permission.

THIS SOFTWARE IS PROVIDED BY THE COPYRIGHT HOLDERS AND CONTRIBUTORS "AS IS" AND ANY EXPRESS OR IMPLIED WARRANTIES, INCLUDING, BUT NOT LIMITED TO, THE IMPLIED WARRANTIES OF MERCHANTABILITY AND FITNESS FOR A PARTICULAR PURPOSE ARE DISCLAIMED. IN NO EVENT SHALL THE COPYRIGHT OWNER OR CONTRIBUTORS BE LIABLE FOR ANY DIRECT, INDIRECT, INCIDENTAL, SPECIAL, EXEMPLARY, OR CONSEQUENTIAL DAMAGES (INCLUDING, BUT NOT LIMITED TO, PROCUREMENT OF SUBSTITUTE GOODS OR SERVICES; LOSS OF USE, DATA, OR PROFITS; OR BUSINESS INTERRUPTION) HOWEVER CAUSED AND ON ANY THEORY OF LIABILITY, WHETHER IN CONTRACT, STRICT LIABILITY, OR TORT (INCLUDING NEGLIGENCE OR OTHERWISE) ARISING IN ANY WAY OUT OF THE USE OF THIS SOFTWARE, EVEN IF ADVISED OF THE POSSIBILITY OF SUCH DAMAGE.

The FreeType Project LICENSE

2006-Jan-27

Copyright 1996-2002, 2006 by

David Turner, Robert Wilhelm, and Werner Lemberg

Introduction

==========

The FreeType Project is distributed in several archive packages; some of them may contain, in addition to the FreeType font engine, various tools and contributions which rely on, or relate to, the FreeType Project.

This license applies to all files found in such packages, and which do not fall under their own explicit license. The license affects thus the FreeType font engine, the test programs, documentation and makefiles, at the very least.

This license was inspired by the BSD, Artistic, and IJG (Independent JPEG Group) licenses, which all encourage inclusion and use of free software in commercial and freeware products alike. As a consequence, its main points are that:

o We don't promise that this software works. However, we will be interested in any kind of bug reports. (`as is' distribution)

o You can use this software for whatever you want, in parts or full form, without having to pay us. (`royalty-free' usage)

o You may not pretend that you wrote this software. If you use it, or only parts of it, in a program, you must acknowledge somewhere in your documentation that you have used the FreeType code. (`credits')

We specifically permit and encourage the inclusion of this software, with or without modifications, in commercial products.

We disclaim all warranties covering The FreeType Project and assume no liability related to The FreeType Project.

Finally, many people asked us for a preferred form for a credit/disclaimer to use in compliance with this license. We thus encourage you to use the following text:

"""

Portions of this software are copyright © <year> The FreeType

Project (www.freetype.org). All rights reserved.

"""

Please replace <year> with the value from the FreeType version you actually use.

Legal Terms

==========

0. Definitions

Throughout this license, the terms `package', `FreeType Project', and `FreeType archive' refer to the set of files originally distributed by the authors (David Turner, Robert Wilhelm, and Werner Lemberg) as the `FreeType Project', be they named as alpha, beta or final release.

`You' refers to the licensee, or person using the project, where `using' is a generic term including compiling the project's source code as well as linking it to form a `program' or `executable'.

This program is referred to as `a program using the FreeType engine'.

This license applies to all files distributed in the original FreeType Project, including all source code, binaries and documentation, unless otherwise stated in the file in its original, unmodified form as distributed in the original archive.

If you are unsure whether or not a particular file is covered by this license, you must contact us to verify this.

The FreeType Project is copyright (C) 1996-2000 by David Turner, Robert Wilhelm, and Werner Lemberg. All rights reserved except as specified below.

1. No Warranty

THE FREETYPE PROJECT IS PROVIDED `AS IS' WITHOUT WARRANTY OF ANY KIND, EITHER EXPRESS OR IMPLIED, INCLUDING, BUT NOT LIMITED TO, WARRANTIES OF MERCHANTABILITY AND FITNESS FOR A PARTICULAR PURPOSE. IN NO EVENT WILL ANY OF THE AUTHORS OR COPYRIGHT HOLDERS BE LIABLE FOR ANY DAMAGES CAUSED BY THE USE OR THE INABILITY TO USE, OF THE FREETYPE PROJECT.

2. Redistribution

This license grants a worldwide, royalty-free, perpetual and irrevocable right and license to use, execute, perform, compile, display, copy, create derivative works of, distribute and sublicense the FreeType Project (in both source and object code forms) and derivative works thereof for any purpose; and to authorize others to exercise some or all of the rights granted herein, subject to the following conditions:

o Redistribution of source code must retain this license file (`FTL.TXT') unaltered; any additions, deletions or changes to the original files must be clearly indicated in accompanying documentation. The copyright notices of the unaltered, original files must be preserved in all copies of source files.

o Redistribution in binary form must provide a disclaimer that states that the software is based in part of the work of the FreeType Team, in the distribution documentation. We also encourage you to put an URL to the FreeType web page in your documentation, though this isn't mandatory.

These conditions apply to any software derived from or based on the FreeType Project, not just the unmodified files. If you use our work, you must acknowledge us. However, no fee need be paid to us.

3. Advertising

Neither the FreeType authors and contributors nor you shall use the name of the other for commercial, advertising, or promotional purposes without specific prior written permission.

We suggest, but do not require, that you use one or more of the following phrases to refer to this software in your documentation or advertising materials: `FreeType Project', `FreeType Engine', `FreeType library', or `FreeType Distribution'.

As you have not signed this license, you are not required to accept it. However, as the FreeType Project is copyrighted material, only this license, or another one contracted with the authors, grants you the right to use, distribute, and modify it.

Therefore, by using, distributing, or modifying the FreeType Project, you indicate that you understand and accept all the terms of this license.

4. Contacts

There are two mailing lists related to FreeType:

o freetype@nongnu.org

Discusses general use and applications of FreeType, as well as future and wanted additions to the library and distribution.

If you are looking for support, start in this list if you haven't found anything to help you in the documentation.

o freetype-devel@nongnu.org

Discusses bugs, as well as engine internals, design issues, specific licenses, porting, etc.

Our home page can be found at

http://www.freetype.org

--- end of FTL.TXT ---

The TWAIN Toolkit is distributed as is. The developer and distributors of the TWAIN Toolkit expressly disclaim all implied, express or statutory warranties including, without limitation, the implied warranties of merchantability, noninfringement of third party rights and fitness for a particular purpose. Neither the developers nor the distributors will be liable for damages, whether direct, indirect, special, incidental, or consequential, as a result of the reproduction, modification, distribution or other use of the TWAIN Toolkit.

JSON for Modern C++

Copyright (c) 2013-2017 Niels Lohmann

Permission is hereby granted, free of charge, to any person obtaining a copy of this software and associated documentation files (the "Software"), to deal in the Software without restriction, including without limitation the rights to use, copy, modify, merge, publish, distribute, sublicense, and/or sell copies of the Software, and to permit persons to whom the Software is furnished to do so, subject to the following conditions:

The above copyright notice and this permission notice shall be included in all copies or substantial portions of the Software.

THE SOFTWARE IS PROVIDED "AS IS", WITHOUT WARRANTY OF ANY KIND, EXPRESS OR IMPLIED, INCLUDING BUT NOT LIMITED TO THE WARRANTIES OF MERCHANTABILITY, FITNESS FOR A PARTICULAR PURPOSE AND NONINFRINGEMENT. IN NO EVENT SHALL THE AUTHORS OR COPYRIGHT HOLDERS BE LIABLE FOR ANY CLAIM, DAMAGES OR OTHER LIABILITY, WHETHER IN AN ACTION OF CONTRACT, TORT OR OTHERWISE, ARISING FROM, OUT OF OR IN CONNECTION WITH THE SOFTWARE OR THE USE OR OTHER DEALINGS IN THE SOFTWARE.

The following applies only to products supporting Wi-Fi.

(c) 2009-2013 by Jeff Mott. All rights reserved.

Redistribution and use in source and binary forms, with or without modification, are permitted provided that the following conditions are met:

* Redistributions of source code must retain the above copyright notice, this list of conditions, and the following disclaimer.
* Redistributions in binary form must reproduce the above copyright notice, this list of conditions, and the following disclaimer in the documentation or other materials provided with the distribution.
* Neither the name CryptoJS nor the names of its contributors may be used to endorse or promote products derived from this software without specific prior written permission.

THIS SOFTWARE IS PROVIDED BY THE COPYRIGHT HOLDERS AND CONTRIBUTORS "AS IS," AND ANY EXPRESS OR IMPLIED WARRANTIES, INCLUDING, BUT NOT LIMITED TO, THE IMPLIED WARRANTIES OF MERCHANTABILITY AND FITNESS FOR A PARTICULAR PURPOSE, ARE DISCLAIMED. IN NO EVENT SHALL THE COPYRIGHT HOLDER OR CONTRIBUTORS BE LIABLE FOR ANY DIRECT, INDIRECT, INCIDENTAL, SPECIAL, EXEMPLARY, OR CONSEQUENTIAL DAMAGES (INCLUDING, BUT NOT LIMITED TO, PROCUREMENT OF SUBSTITUTE GOODS OR SERVICES; LOSS OF USE, DATA, OR PROFITS; OR BUSINESS INTERRUPTION) HOWEVER CAUSED AND ON ANY THEORY OF LIABILITY, WHETHER IN CONTRACT, STRICT LIABILITY, OR TORT (INCLUDING NEGLIGENCE OR OTHERWISE) ARISING IN ANY WAY OUT OF THE USE OF THIS SOFTWARE, EVEN IF ADVISED OF THE POSSIBILITY OF SUCH DAMAGE.

Connecting Device to Printer Directly (Wireless Direct)

The printer supports "wireless direct" in which you can connect to the printer wirelessly from devices (e.g. smartphone, or tablet) without a wireless router.

Switch to "wireless direct" to print wirelessly.

- Connecting Smartphone/Tablet to Printer Directly (Wireless Direct)

Available Connection Methods

The following four connection methods are available on the printer.

Wi-Fi Connection

- **With a wireless router**

- **Without a wireless router**

Wired LAN Connection (Ethernet Cable)

USB Connection (USB Cable)

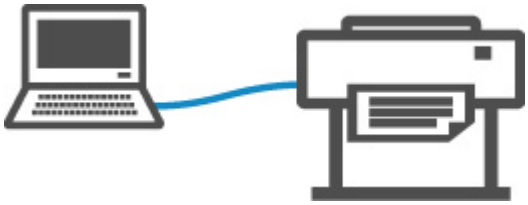

Wi-Fi Connection

There are two methods for connecting the printer to your device (e.g. smartphone or tablet). One method is to connect using a wireless router, and the other method is to connect without using a wireless router.

The two connection methods cannot be used at the same time.

If you have a wireless router, we recommend using a wireless router.

When connecting another device while a device is already connected to the printer, connect it using the same connection method as the connected device.

If you connect using a different connection method, the connection to the device in use will be disabled.

- **Connection Using a Wireless Router**

  - Connect the printer and a device using a wireless router.
  - The connection procedure varies depending on the type of wireless router.
  - You can change the network settings such as SSID and security protocol used by the printer from the printer.
  - When the connection between a device and a wireless router is completed and (Wi-Fi icon) is displayed in the device's screen, you can connect the device to the printer using the wireless router.

- **Connection without Using a Wireless Router**

  - Connect the printer and a device without using a wireless router. Connect the device and the printer directly using the printer's wireless direct.
  - If you connect a device connected to the Internet via a wireless router to the printer that is in the wireless direct, the connection between the device and wireless router will be disabled. In that case, the connection of the device may switch to a mobile data connection automatically depending on your device. Transmission fees for connecting to the Internet using a mobile data connection apply.
  - In the wireless direct, you can connect up to five devices at the same time. If you try to connect another device while five devices are already connected, disconnect a device you do not use and configure settings again.
  - Network settings such as the SSID and security protocol are specified automatically.

Wired LAN Connection (Ethernet Cable)

Connect the printer and a hub or router with an Ethernet cable. Prepare an Ethernet cable.

USB Connection (USB Cable)

Connect the printer and a computer with a USB cable. Prepare a USB cable.

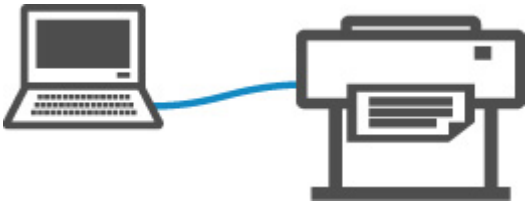

- Restrictions

Handling and Use of Paper

Paper

- Types of Paper
- Paper Sizes
- Using Paper Other Than Genuine Paper and feed confirmed Paper
- Printing on Paper Other Than Genuine Paper and feed confirmed Paper Using Existing Settings
- Printing on Paper Other Than Genuine Paper and feed confirmed Paper by Adding a Media Type
- Paper Information List
- Updating paper information

Handling rolls

- Loading Rolls on the Roll Holder
- Loading Rolls in the Printer
- Changing the Type of Paper
- Specifying the Paper Length
- Removing the Roll from the Printer
- Removing Rolls From the Roll Holder
- Remove Jammed Roll Paper
- Feeding Roll Paper Manually
- Keeping Track of the Amount of Roll Paper Left
- Specifying the Ink Drying Time for Rolls
- Specifying the Cutting Method for Rolls
- Cutting the Leading Edge of Roll Paper Automatically
- Reducing Dust from Cutting Rolls
- Detecting Roll Paper was Replaced While the Power was Off

Handling sheets

- Loading Sheets in the Printer
- Changing the Type of Paper
- Printing From a Desired Starting Point
- Removing Sheets
- Remove a Jammed Sheet

Basket

- Using the Basket

Media Configuration Tool Guide

Paper

- Types of Paper
- Paper Sizes
- Using Paper Other Than Genuine Paper and feed confirmed Paper
- Printing on Paper Other Than Genuine Paper and feed confirmed Paper Using Existing Settings
- Printing on Paper Other Than Genuine Paper and feed confirmed Paper by Adding a Media Type
- Paper Information List
- Updating paper information

Types of Paper

The following media types are supported by the printer. For details on the media types supported by the printer, see "Paper Information List."

- Plain Paper
- Coated Paper
- Photo Paper
- Glossy Paper
- Proofing Paper
- CAD-dedicated Paper Etc.

The Paper Information List includes the following information.

- Types of paper
- Paper handling
- Paper product specifications
- Use precautions
- Setting of printer driver, control panel etc.

Note

- For instructions on using paper not included in the Paper Information List, see "Using Paper Other Than Genuine Paper and feed confirmed Paper."

- **Method of Updating Supported Paper**

  Paper that is supported by the printer may be newly released on the Canon website.

  To use newly released paper, register the latest paper information on the printer with the Media Configuration Tool. (See "Updating paper information.")

  Important

  - Even if you are not using the printer driver, you should install the Media Configuration Tool in order to register the media types for your region in the printer.

    (See "Media Configuration Tool Guide" (Windows).)

    (See "Media Configuration Tool Guide" (macOS).)

Paper Sizes

Rolls

Rolls that meet the following conditions are supported.

- Outer diameter is 5.9 inches (150 mm) or less
- Inner diameter of paper core: 2 or 3 inches
- Printing side out

Roll Width	Printer Driver Roll Paper Width Settings	Borderless Printing (*1)
36.00 inches (914.4 mm)	**36 in Roll (914.4mm)**	Recommended(*2)
33.11 inches (841.0 mm)	**A0/A1 Roll (841.0mm)**	Recommended(*2)
31.50 inches (800.0 mm)	**800mm Roll (800.0mm)**	Possible(*3)
30.00 inches (762.0 mm)	**30 in Roll (762.0mm)**	Possible(*3)
28.66 inches (728.0 mm)	**B1/B2 Roll (728.0mm)**	Recommended(*2)
24.00 inches (609.6 mm)	**24 in Roll (609.6mm)**	Recommended(*2)
23.62 inches (600.0 mm)	**600mm Roll (600.0mm)**	Possible(*3)
23.39 inches (594.0 mm)	**A1/A2 Roll (594.0mm)**	Recommended(*2)
20.28 inches (515.0 mm)	**B2/B3 Roll (515.0mm)**	Recommended(*2)
20.00 inches (508.0 mm)	**20 in Roll (508.0mm)**	Possible(*3)
19.69 inches (500.0 mm)	**500mm Roll (500.0mm)**	Possible(*3)
17.00 inches (431.8 mm)	**17 in Roll (431.8mm)**	Recommended(*2)
16.54 inches (420.0 mm)	**A2/A3 Roll (420.0mm)**	Possible(*3)
16.00 inches (406.4 mm)	**16 in Roll (406.4mm)**	Possible(*3)
14.00 inches (355.6 mm)	**14 in Roll (355.6mm)**	Recommended(*2)
12.95 inches (329.0 mm)	**A3+ Roll (329.0mm)**	Possible(*3)
12.00 inches (304.8 mm)	**12 in Roll (304.8mm)**	Possible(*3)
11.81 inches (300.0 mm)	**300mm Roll (300.0mm)**	Possible(*3)
11.69 inches (297.0 mm)	**A3/A4 Roll (297.0mm)**	Possible(*3)
10.12 inches (257.0 mm)	**B4 Roll (257.0mm)**	Possible(*3)
10.00 inches (254.0 mm)	**10 in Roll (254.0mm)**	Recommended(*2)
8.00 inches (203.2 mm)	**8 in Roll (203.2mm)**	Possible(*3)

*1:For details on media types that can be used for borderless printing, see "Paper Information List."
*2:When you perform borderless printing, it is recommended that you use these widths.
*3:As opposed to standard borderless printing, there will be a small margin on the left and right because the paper width is set a little bit smaller than the width of the document.

Sheets

Sheets of the following sizes are supported.

Paper Sizes	Dimensions
A0	33.11 x 46.81 inches (841.0 x 1189.0 mm)
A1	23.39 x 33.11 inches (594.0 x 841.0 mm)
A2	16.54 x 23.39 inches (420.0 x 594.0 mm)
A2+	17.00 x 24.00 inches (431.8 x 609.6 mm)
A3	11.69 x 16.54 inches (297.0 x 420.0 mm)
A3+	12.95 x 19.02 inches (329.0 x 483.0 mm)
A4	8.27 x 11.69 inches (210.0 x 297.0 mm)
ISO B1	27.83 x 39.37 inches (707.0 x 1000.0 mm)
ISO B2	19.69 x 27.83 inches (500.0 x 707.0 mm)
ISO B3	13.90 x 19.69 inches (353.0 x 500.0 mm)
ISO B4	9.84 x 13.90 inches (250.0 x 353.0 mm)
JIS B1	28.66 x 40.55 inches (728.0 x 1030.0 mm)
JIS B2	20.28 x 28.66 inches (515.0 x 728.0 mm)
JIS B3	14.33 x 20.28 inches (364.0 x 515.0 mm)
JIS B4	10.12 x 14.33 inches (257.0 x 364.0 mm)
34"x44" (ANSI E)	34.00 x 44.00 inches (863.6 x 1117.6 mm)
28"x40" (ANSI F)	28.00 x 40.00 inches (711.2 x 1016.0 mm)
22"x34" (ANSI D)	22.00 x 34.00 inches (558.8 x 863.6 mm)
17"x22" (ANSI C)	17.00 x 22.00 inches (431.8 x 558.8 mm)
11"x17" (Ledger)	11.00 x 17.00 inches (279.4 x 431.8 mm)
13"x19" (Super B)	13.00 x 19.00 inches (330.2 x 482.6 mm)
Letter (8.5"x11")	8.50 x 11.00 inches (215.9 x 279.4 mm)
Legal (8.5"x14")	8.50 x 14.00 inches (215.9 x 355.6 mm)

Paper Sizes	Dimensions
36"x48" (ARCH E)	36.00 x 48.00 inches (914.4 x 1219.2 mm)
30"x42" (ARCH E1)	30.00 x 42.00 inches (762.0 x 1066.8 mm)
26"x38" (ARCH E2)	26.00 x 38.00 inches (660.4 x 965.2 mm)
27"x39" (ARCH E3)	27.00 x 39.00 inches (685.8 x 990.6 mm)
24"x36" (ARCH D)	24.00 x 36.00 inches (609.6 x 914.4 mm)
18"x24" (ARCH C)	18.00 x 24.00 inches (457.2 x 609.6 mm)
12"x18" (ARCH B)	12.00 x 18.00 inches (304.8 x 457.2 mm)
9"x12" (ARCH A)	9.00 x 12.00 inches (228.6 x 304.8 mm)
DIN C0	36.10 x 51.06 inches (917.0 x 1297.0 mm)
DIN C1	25.51 x 36.10 inches (648.0 x 917.0 mm)
DIN C2	18.03 x 25.51 inches (458.0 x 648.0 mm)
DIN C3	12.76 x 18.03 inches (324.0 x 458.0 mm)
DIN C4	9.02 x 12.76 inches (229.0 x 324.0 mm)
20"x24"	20.00 x 24.00 inches (508.0 x 609.6 mm)
18"x22"	18.00 x 22.00 inches (457.2 x 558.8 mm)
14"x17"	14.00 x 17.00 inches (355.6 x 431.8 mm)
12"x16"	12.00 x 16.00 inches (304.8 x 406.4 mm)
10"x12"	10.00 x 12.00 inches (254.0 x 304.8 mm)
10"x15"	10.00 x 15.00 inches (254.0 x 381.0 mm)
US Photo 16"x20"	16.00 x 20.00 inches (406.4 x 508.0 mm)
Poster 30"x40"	30.00 x 40.00 inches (762.0 x 1016.0 mm)
Poster 20"x30"	20.00 x 30.00 inches (508.0 x 762.0 mm)
13"x22"	12.95 x 21.97 inches (329.0 x 558.0 mm)
Poster 300x900mm	11.81 x 35.43 inches (300.0 x 900.0 mm)
Custom Paper Size	8.00 x 11.00 inches (203.2 × 279.4 mm) to 36.10 x 62.99 inches (917.0 × 1600.0 mm)

Note

- For details on non-standard sizes, see "Setting Paper Dimensions (Custom Size)" (Windows) or "Setting Paper Dimensions (Custom Size)" (macOS).

- Borderless printing is not supported on sheets.

Using Paper Other Than Genuine Paper and feed confirmed Paper

When using this printer to print on paper other than genuine Canon paper and feed confirmed paper, use paper that meets the following conditions.

Note

- For Canon genuine paper/feed confirmed paper, see "Paper Information List."

- Paper where the size is described in "Paper Sizes" (See "Paper Sizes.")
- Paper where the thickness is described in "Paper Thickness" in "Specifications" (See "Specifications.")
- Paper where bleeding and ink overflow does not occur when printing
- Paper that does not warp severely when loading the paper or printing

Important

- If you use paper other than Canon genuine paper and feed confirmed paper, Canon provides absolutely no guarantees regarding print quality or paper feed properties. For Canon genuine paper/feed confirmed paper, see "Paper Information List."

After loading the paper in the printer, select the media type in the control panel and printer driver and then perform the printing. For the media type, you can select easily from existing settings or you can create and use settings for the paper you are using.

Printing Using Existing Settings

You can print easily by selecting from existing settings provided in the printer control panel and printer driver. (See "Printing on Paper Other Than Genuine Paper and feed confirmed Paper Using Existing Settings.")

Printing Using Additional Settings

You can use the Media Configuration Tool function for adding custom paper to create settings suitable for non-Canon genuine paper/feed confirmed paper and add as a new media type to the printer's Control Panel and the printer driver for printing. (See "Printing on Paper Other Than Genuine Paper and feed confirmed Paper by Adding a Media Type.")

Printing on Paper Other Than Genuine Paper and feed confirmed Paper Using Existing Settings

You can easily print on paper other than genuine Canon paper and feed confirmed paper without making complicated settings by selecting the existing settings provided in the printer control panel and printer driver depending on the media type you are using. The existing settings consist of general-purpose paper settings provided for different media types.

Important

- The Canon genuine paper settings provided in the printer control panel and printer driver are optimized for Canon genuine paper. If these settings are selected for printing on paper other than Canon genuine paper, the ink may bleed or the print head may rub against the paper. To easily print on paper other than Canon genuine paper and feed confirmed paper, we recommend that you select one of the following general-purpose paper settings.

Note

- For an overview of the media types, see "Types of Paper."
- For instructions on selecting the media type with the control panel, see "Types of Paper". For instructions on selecting the media type with the printer driver, see "How to Open the Printer Driver Setup Window" (Windows) or "How to Open the Printer Driver Setup Dialog" (macOS).

Choosing General-Purpose Paper Settings

These settings anticipate a wide variety of paper other than Canon genuine paper and feed confirmed paper, and, therefore, these settings make it difficult for bleeding ink and print head rubbing to occur. For details on the relationships between the conditions of paper other than Canon genuine paper and feed confirmed paper and the media type to select, see "Paper Information List."

Note

- If you cannot obtain the desired results by selecting the general-purpose paper settings, use the custom paper adding function in Media Configuration Tool to create settings suitable for the paper you are using. For details, see "Printing on Paper Other Than Genuine Paper and feed confirmed Paper by Adding a Media Type."

Printing on Paper Other Than Genuine Paper and feed confirmed Paper by Adding a Media Type

Media Configuration Tool provides a function for adding custom paper for better print quality and improved paper feed properties when printing on paper other than Canon genuine paper/feed confirmed paper than when printing with general-purpose settings. You can use this function to configure settings such as the amount of ink used and the height of the print head according to the characteristics of the paper being used, and thereby realize higher print quality. Also, you can add the settings created with this function as a new media type to the printer control panel and printer driver.

For details on Media Configuration Tool, refer as follows.

- Media Configuration Tool Guide (Windows)
- Media Configuration Tool Guide (macOS)

Important

- For details on how to select the added media type in the control panel, see "Changing the Type of Paper."
- You can select the media type to be used in printing from **Media Type** in the **Main** sheet (Windows) or **Quality & Media** (macOS) in the printer driver. For details, see "Main Tab Description" (Windows) or "Quality & Media" (macOS).
- We recommend that you use an ICC profile created using commercially available profile creation software to perform color management accurately on paper other than Canon genuine paper and feed confirmed paper. You can register the ICC profile you created when creating a custom paper with Media Configuration Tool.

  (See "Adding Custom Paper" (Windows).)

  (See "Adding Custom Paper" (macOS).)

Updating paper information

You can update the printer's media information to the latest information by applying the latest version of the Media Information File.

For details on the procedure for applying the Media Information File, refer to the following.

- Media Configuration Tool Guide (Windows)
- Media Configuration Tool Guide (macOS)

Important

- If you are using the Media Configuration Tool, the new Media Information File is downloaded automatically when released on the Canon website. A computer connected to the Internet is required to download the Media Information File.

Handling rolls

- Loading Rolls on the Roll Holder
- Loading Rolls in the Printer
- Changing the Type of Paper
- Specifying the Paper Length
- Removing the Roll from the Printer
- Removing Rolls From the Roll Holder
- Remove Jammed Roll Paper
- Feeding Roll Paper Manually
- Keeping Track of the Amount of Roll Paper Left
- Specifying the Ink Drying Time for Rolls
- Specifying the Cutting Method for Rolls
- Cutting the Leading Edge of Roll Paper Automatically
- Reducing Dust from Cutting Rolls
- Detecting Roll Paper was Replaced While the Power was Off

Loading Rolls on the Roll Holder

When printing on roll paper, attach the roll paper to the roll holder.

Roll paper comes in two types: 2-inch and 3-inch cores. If using 3-inch core roll paper, attach the 3-inch paper core attachment to the roll holder and holder stopper.

Caution

- Set the roll on its side on a table or other flat surface so that it does not roll or fall. Rolls are heavy, and dropping a roll may cause injury.

Important

- When handling the roll, be careful not to soil the printing surface. This may affect the printing quality. We recommend wearing clean cloth gloves when handling rolls to protect the printing surface.
- Cut the edge of the roll paper if it is uneven, dirty, or has tape residue. Otherwise, it may cause feeding problems and affect the printing quality. Be careful not to cut through any barcodes printed on the roll.

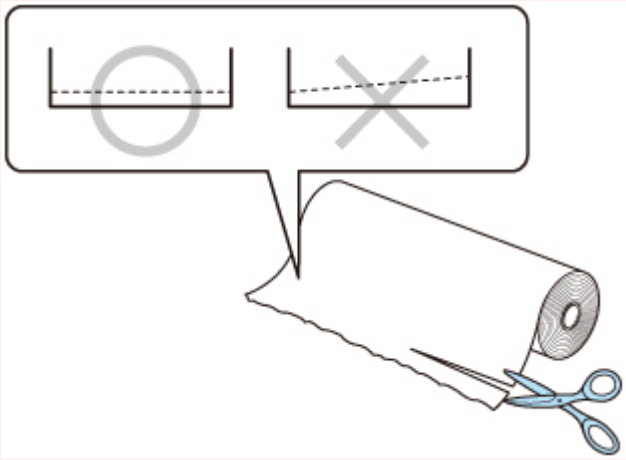

- Align the edges of the paper on both ends of the roll. This may cause feeding problems.

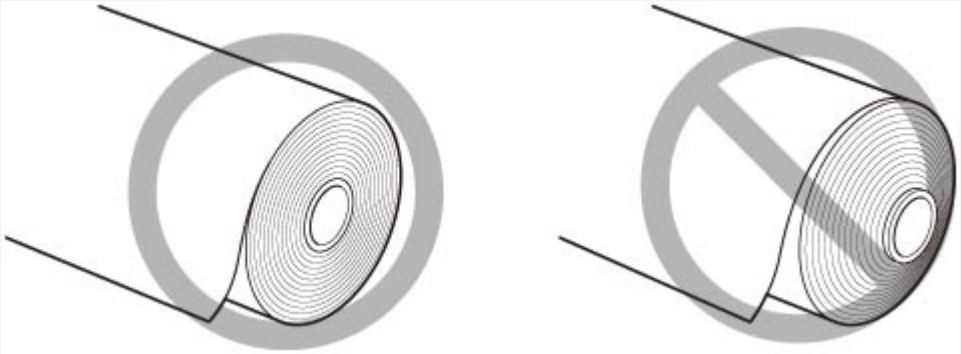

- If a feeding problem occurs, release the release lever and reload the roll paper.

Note

- For details on roll paper sizes and types that can be used, see "Paper Sizes" or "Paper Information List".

1. Rotate the holder stopper lever (A) towards 🔓 to release the lock, and while holding it in position (B), remove holder stopper from the roll holder.

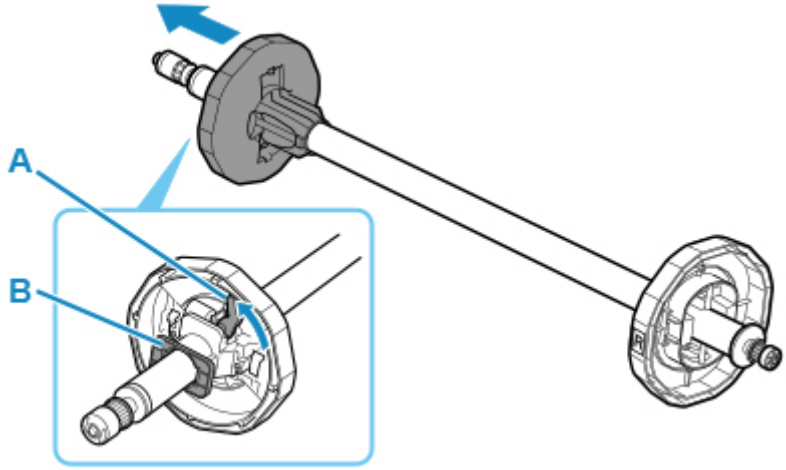

2. If using 3-inch core paper, align 3-inch paper core attachment tabs (A) with roll holder holes (B) and insert firmly.

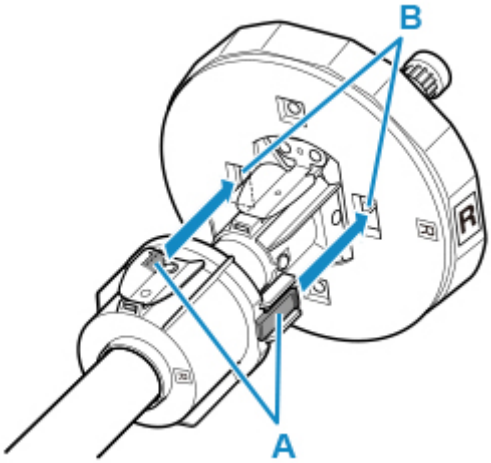

3. With leading edge of roll paper facing forward as shown, insert Roll Holder from right side of roll. Insert firmly until roll paper touches flange (A) of roll holder.

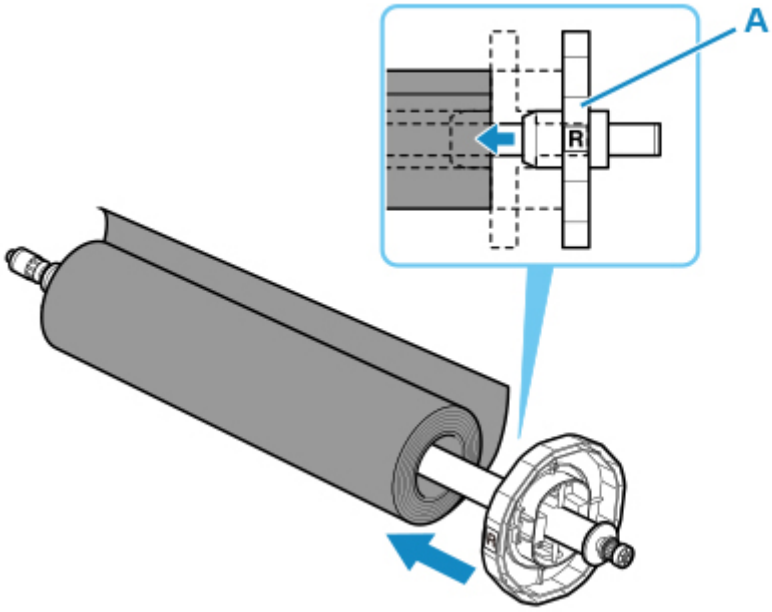

Important

- When loading a roll, be careful to avoid hitting the printer hard with the roll. This may damage the roll holder.
- If you stand the roll holder vertically and set the roll paper by dropping, the roll holder may be damaged.

4. If using 3-inch core roll paper, attach 3-inch paper core attachment to holder stopper.

Align the tabs (A) of the attachment with the holes (B) of the holder stopper, and insert firmly.

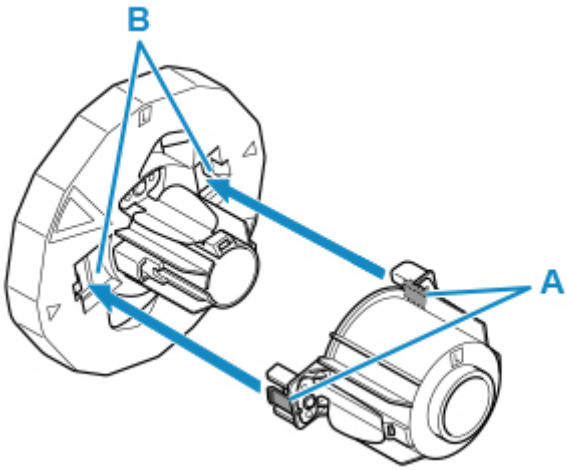

5. Insert holder stopper from left into roll holder as shown, and then while holding in position (B), push firmly until holder stopper flange (A) touches roll paper. Lock the holder stopper lever (C) by rotating it towards 🔒.

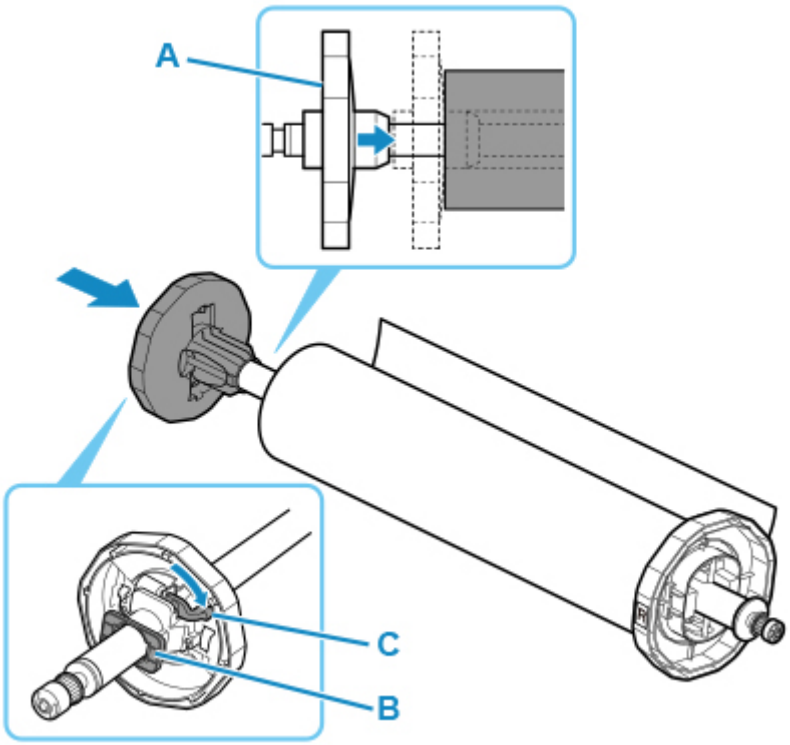
A
C
B

Loading Rolls in the Printer

Follow these steps to load rolls in the printer.

Important

- Before loading a roll, confirm whether the inside of the top cover or the output guide is soiled. If these areas are dirty, we recommend cleaning them in advance. (See "Cleaning Inside the Top Cover.")

1. Tap **Load paper** or **Replace paper** on the Home screen of the operation panel.

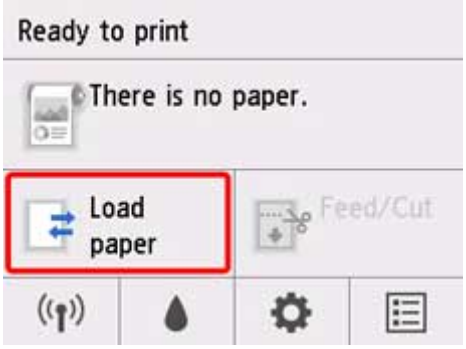

Note

- If the Home screen does not appear, tap the **HOME** button.

2. Tap **Load roll paper**.

Note

- If any paper has been advanced that will not be used, a message is shown requesting you to remove it.

  After following the instructions on the screen to remove the paper, go to the next step.

3. Positioning your hands as shown, open the roll paper cover.

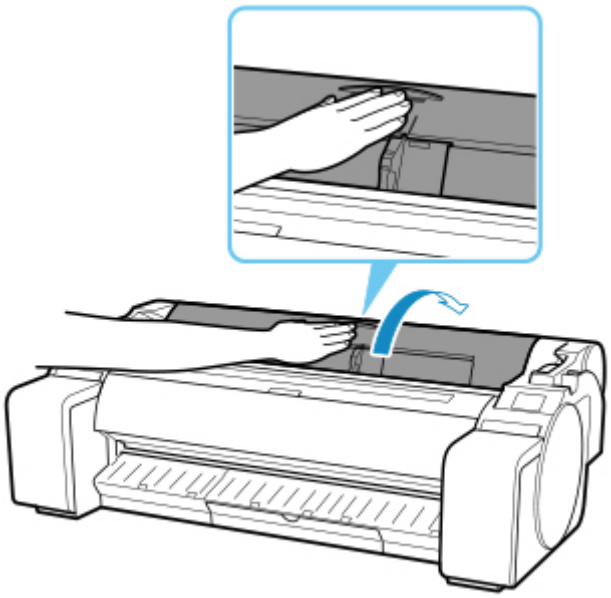

4. Holding the roll holder flange (A), rest the roll holder shaft on the roll holder resting ledge (B).

   At this time, position the holder as shown in the illustration so that the R label (C) on the roll holder flange is aligned with the R label (D) on the printer.

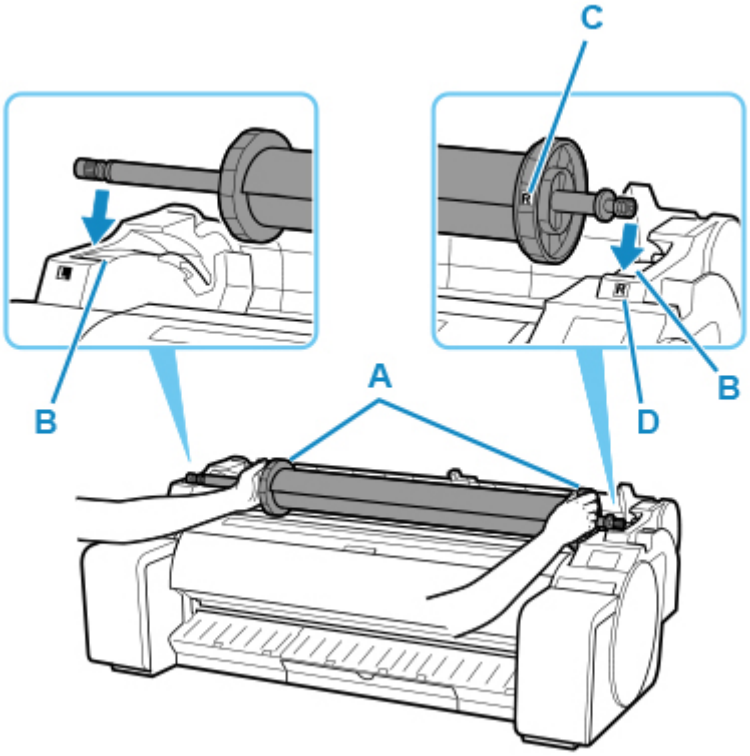

5. Holding the roll holder flange (A), guide the holder along the slide guides (b) on both ends, keeping the holder level as you load it in the roll holder slot.

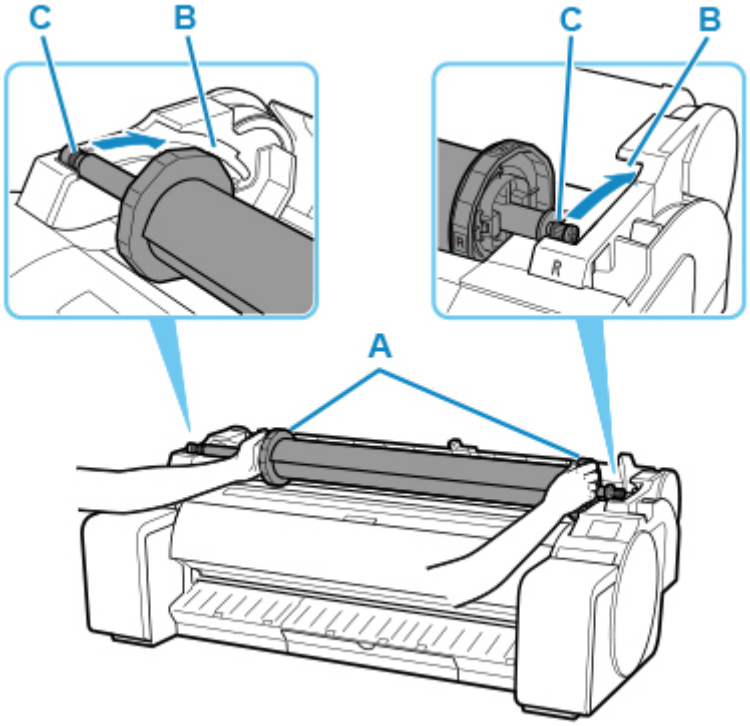

⚠ Caution

- Do not force the roll holder into the printer with the right and left ends reversed. This may damage the printer and roll holder.
- Do not release the flanges until the holder is loaded in the roll holder slot.
- Be careful not to pinch your fingers between the slide guides (B) and the roll holder shaft (C) when loading rolls.

Important

- If the leading edge of the roll paper is cut crooked or folded, it may not be fed correctly. Cut the leading edge of the roll paper with scissors or the like and straighten it.
- Load the roll paper so that it is not loaded in the opposite direction.

6. Insert the edge of the roll in the feed slot (A) and advance the roll until you hear the feed tone.

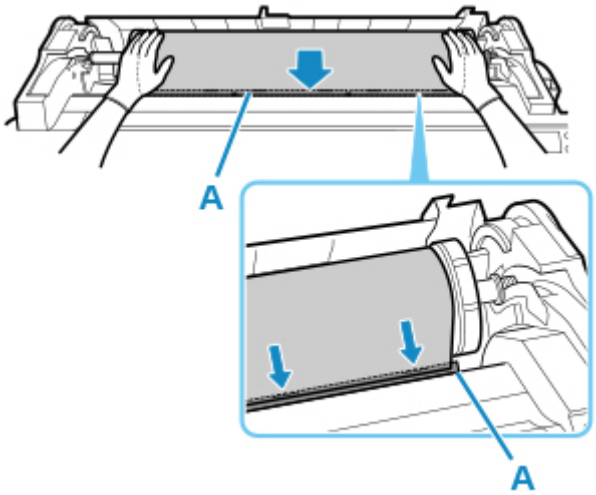

Important

- If the roll paper has become unwound, remove the slack before loading the roll paper.
- Be careful not to soil the printing surface of roll paper as you insert it in the slot. This may affect the printing quality. We recommend wearing clean cloth gloves when handling rolls to protect the printing surface.
- If the paper is wrinkled or warped, straighten it out before loading it.
- Load the roll so that there is no gap between the right edge of the paper and the roll holder.

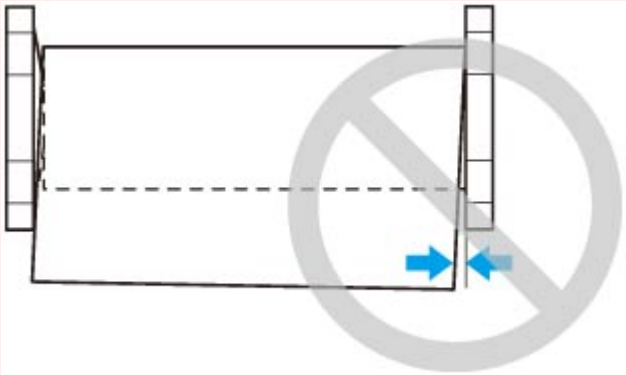

7. After paper feeding has started, do the following operations based on the **Manage remaining roll amount** setting and the barcode printed on the roll paper (see "Keeping Track of the Amount of Roll Paper Left").

   - **When selecting Disable or Warning message only in Manage remaining roll amount.**

     A menu for selecting the media type appears on the operation panel. Operate the operation panel and select the media type to be used.

   - **When selecting Barcodes in Manage remaining roll amount and if the barcode is printed.**

     The type and amount of paper left is automatically detected based on the barcode printed on the roll. There is no need to specify the type and length of the paper.

- **When selecting Barcodes in Manage remaining roll amount and if the barcode is not printed.**

  A menu for selection of the media type and length is shown on the operation panel. Operate the operation panel, select the media type to be used, and enter its length.

Important

- When selecting **Enable** in **Keep media type**, there is no need to specify the type of the paper.
- Cut the edge of the roll using the **Cut paper** function if the edge is creased or soiled. (See "Specifying the Cutting Method for Rolls.")
- When selecting the media type on the operation panel, make sure the media type set in the printer driver and the media type loaded on the printer match.

Note

- For details on media types that you can select, see "Paper Information List."

8. Holding it at the positions indicated, close the roll paper cover.

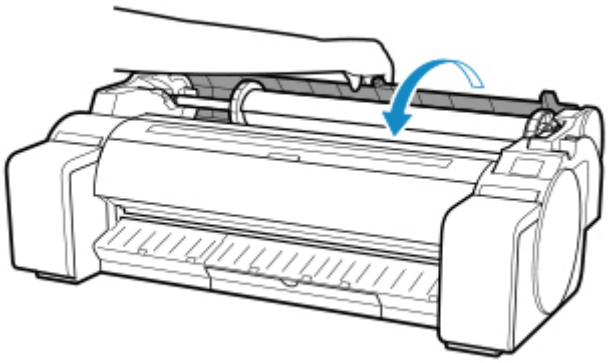

Note

- Cut the edge of the roll after the paper is advanced if it is soiled or if there are cuts from scissors or the blade after removing creased edges. (See "Specifying the Cutting Method for Rolls.")
- Adjusting the printhead alignment with the type of paper to be used in printing may enhance printing quality. (See "Automatic Adjustment to Straighten Lines and Colors.")

Changing the Type of Paper

Follow these steps to change the type of paper specified on the printer after you have loaded paper.

If you continue using the same type of paper and set **Keep media type** to **Enable**, when you load paper, the media type selected before **Enable** was set is selected automatically, eliminating the need to set the media type. (See "Using the Same Type of Paper Regularly.")

Important

- For best printing results, the printer fine-tunes the print head height and the feed amount for each type of paper. Be sure to select the type of paper to use correctly before printing.
- Because the printer fine-tunes the feed amount for each type of paper, the margins and the size of printed images may vary depending on the type of paper used. If margins and the size of images are not as you expected, adjust the paper feed amount.

  (See "Adjusting Feed Amount.")
- Rolls and sheets have different printing areas, and sheets having a larger bottom margin than rolls.

  (See "Print Area.")

Changing the Type of Paper

Note

- When you load roll paper, a menu for selecting the media type appears on the operation panel. Tap the media type.

  If no barcode has been printed on the roll paper and you have set **Manage remaining roll amount** to Barcodes, specify the roll length after selecting the media type. (See "Specifying the Paper Length.")

1. Tap paper settings display area on Home screen of operation panel.

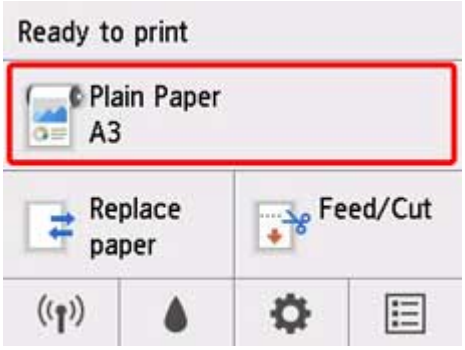

Note

- If the Home screen does not appear, press the **HOME** button.

2. Tap **Paper settings**.

3. Tap **Type**.

4. Tap media type of roll paper loaded in printer.

5. Tap **Register**.

Important

- Be sure to select the correct paper type. If this setting does not match the loaded paper, it may cause feed errors and affect printing quality.

Note

- For details on media types, see "Paper Information List." At the factory default settings, **Plain Paper** is selected for the media type.
- When the release lever is operated, the settings automatically return to the last selected media type.

Using the Same Type of Paper Regularly

Configure this setting so that current media type settings will be automatically selected when you load the same type of paper later.

1. Tap (**Setup**) on Home screen of operation panel.

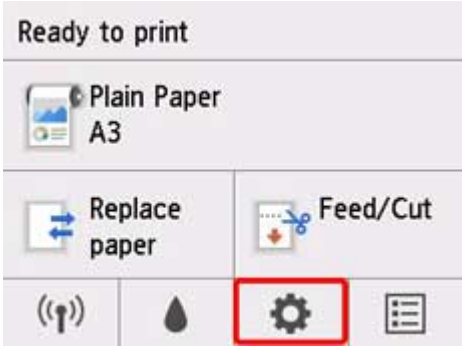

Note

- If the Home screen does not appear, press the **HOME** button.

2. Tap **Device settings**.

3. Tap **Paper-related settings**.

4. Tap **Keep media type**.

5. Tap **Enable**.

Note

- The specified media type setting is updated in the following situations.

- When using sheets, if you send a print job before loading a sheet, the media type setting is updated to match the type of paper specified by the print job.
- If a barcode is printed on the roll paper and you have set **Manage remaining roll amount** to Barcodes in the operation panel menu, the media type setting is updated to match the media type specified by the barcode.

- To change the media type setting, see "Changing the Type of Paper."

Specifying the Paper Length

When changing the length of paper after the paper has been advanced, specify the length as follows.

Note

- Specify the roll paper length when you have set **Manage remaining roll amount** to **Barcodes**. (See "Keeping Track of the Amount of Roll Paper Left.")

1. Tap paper settings display area on Home screen of operation panel.

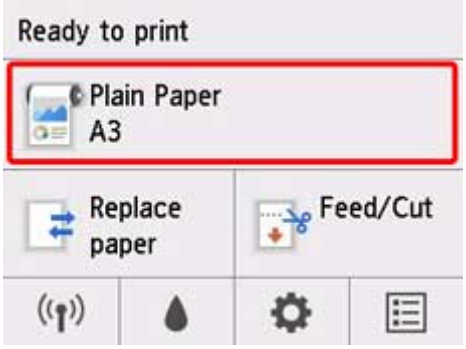

Note

- If the Home screen does not appear, press the **HOME** button.

2. Tap **Paper settings**.

3. Tap **Advanced**.

4. Tap **Length**.

5. Enter roll paper length.

   Specify the roll length as follows.

   1. Tap the numerical input field.
   2. Tap the keypad appearing on the operation panel, enter the roll paper length, and then tap **OK**.
   3. Check the entered length and tap **OK**.

Removing the Roll from the Printer

Remove rolls from the printer as follows.

Note

- If you need to cut a printed roll, select **Feed/cut** in the printer menu and cut the roll paper at the desired position. (See "Specifying the Cutting Method for Rolls.")

1. Tap paper settings display area on Home screen of operation panel.

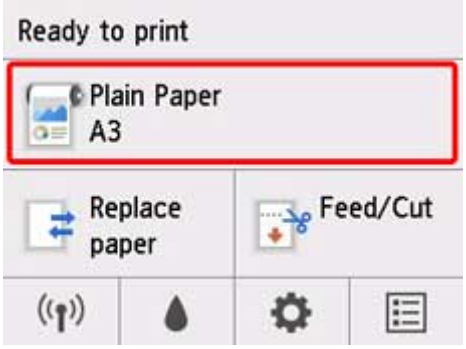

Note

- If the Home screen does not appear, press the **HOME** button.

2. Tap **Remove paper**.

3. Tap **Yes**.

The roll is rewound.

Important

- If **Manage remaining roll amount** is set to **Barcodes** in the operation panel menu, a barcode is printed on the leading edge of the roll paper.

  Do not remove the roll before the barcode is printed. You will be unable to keep track of the amount of roll paper left. (See "Keeping Track of the Amount of Roll Paper Left.")

4. Positioning your hands as shown, open the roll paper cover.

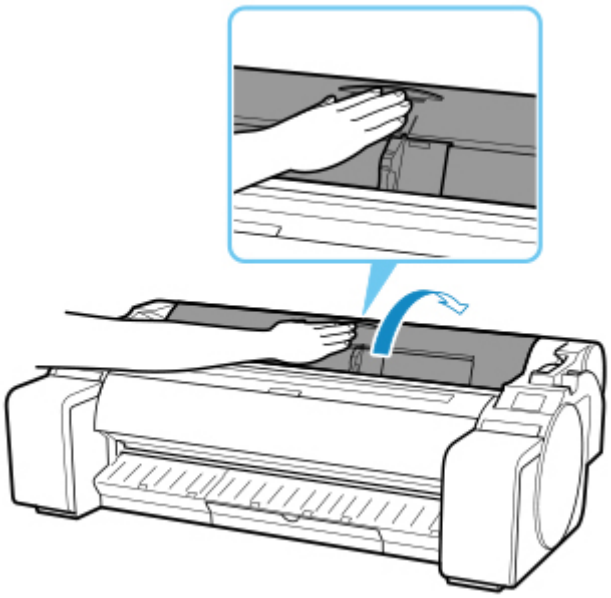

5. Using both hands, rotate the roll holder toward the back to rewind the roll.

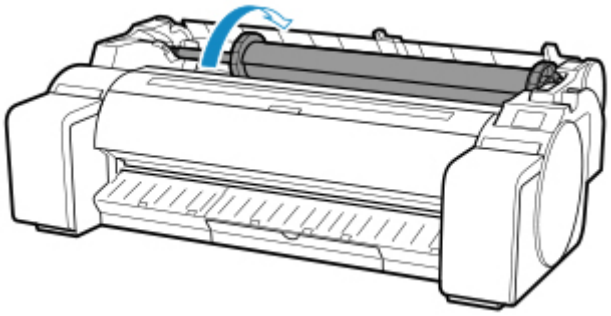

6. Hold roll holder by its flanges (A) and remove from roll holder slot.

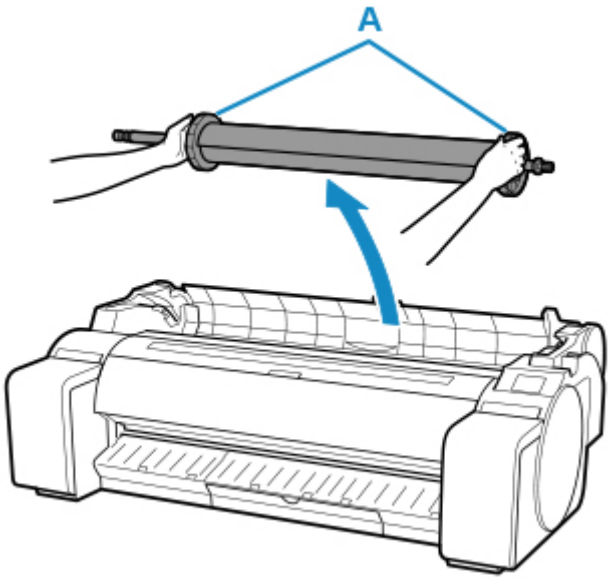

Note

- For instructions on removing the roll holder from rolls, see "Removing Rolls From the Roll Holder."

7. Holding it at the positions indicated, close the roll paper cover.

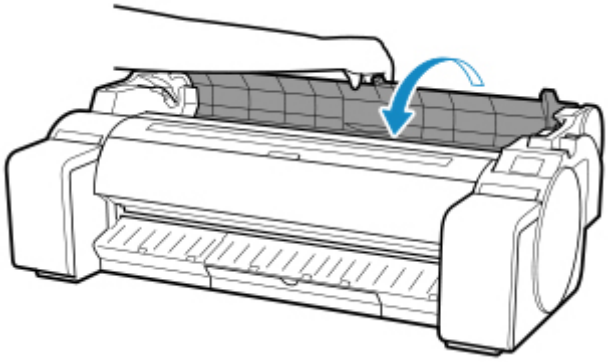

Note

- To load new roll paper in the printer at this point, see "Loading Rolls in the Printer."
- Clean inside the top cover before loading paper.

  (See "Cleaning Inside the Top Cover.").

Removing Rolls From the Roll Holder

1. Rotate the holder stopper lever (A) towards 🔓 to release the lock, and while holding it in position (B), remove holder stopper from the roll holder.

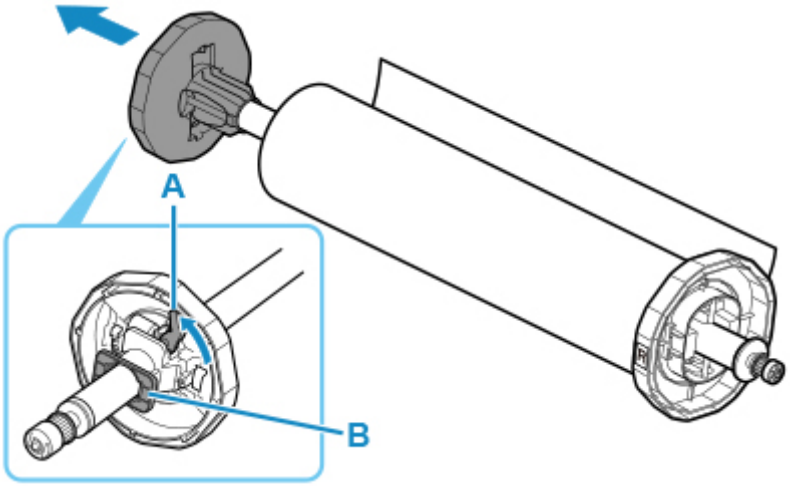

2. Remove roll holder from roll paper.

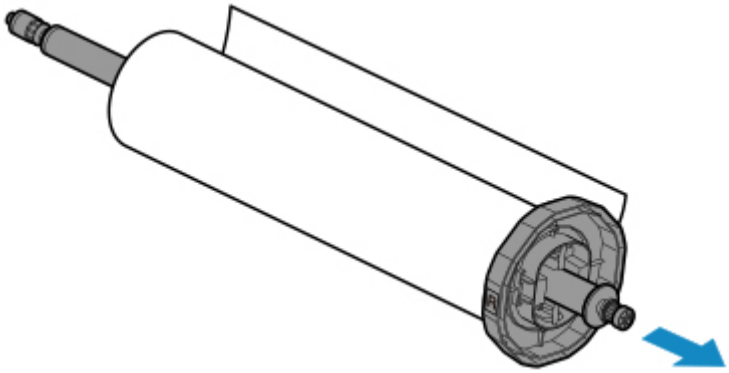

3. To remove 3-inch paper core attachment, press tabs (A) inward and remove attachment.
   - roll holder Side

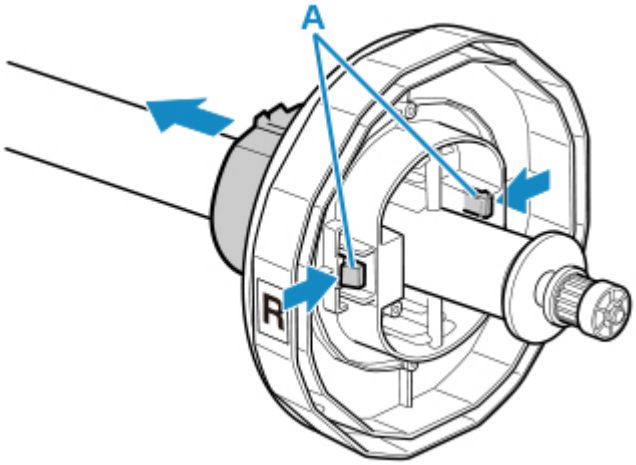

- holder stopper Side

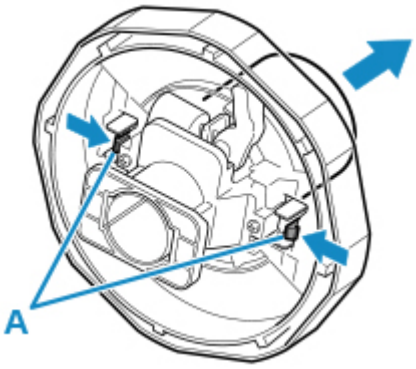

Important

- Store the roll in the original bag or box, away from high temperature, humidity, and direct sunlight. If paper is not stored properly, the printing surface may become scratched, which may affect the printing quality when you use it again.

Feeding Roll Paper Manually

After feeding the roll paper, you can move it forward and back.

1. Tap paper settings display area on Home screen of operation panel.

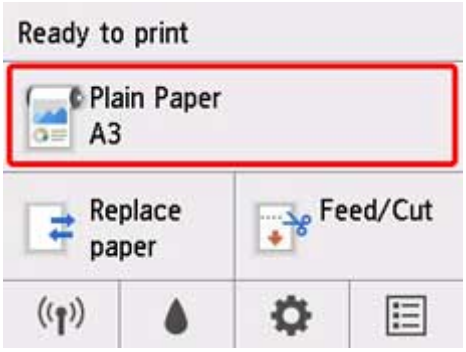

Note

- If the Home screen does not appear, press the **HOME** button.

2. Tap **Feed/Cut**.

3. Tap or touch **Advance** and **Rewind** to move roll paper forward or back.

Note

- Tapping **Advance** or **Rewind** moves the roll paper approximately 0.04 inch (1 mm).

  Touching **Advance** or **Rewind** moves the roll paper until you release the key. If "**Cannot advance the paper any more.**" appears on the operation panel, release the key.

4. Tap **OK** when you have determined position of roll paper.

Keeping Track of the Amount of Roll Paper Left

There are two methods of managing the amount of roll paper left: by using the barcode and by estimating the amount of roll paper left.

Managing by the Barcode for the Amount of Roll Paper Left

When you set **Manage remaining roll amount** to **Barcodes** in **Device settings** on the Home screen, the amount of remaining roll paper and the media type information are printed as a barcode and text when the paper is removed. When **Manage remaining roll amount** is set to **Barcodes** and you load roll paper with a printed barcode, the media type and remaining amount are automatically detected after the roll paper is loaded. The barcode will be cut off after it has been read.

Important

- If the barcode on the roll is not detected, enter the type and length of paper on the operation panel. The length of the paper at this time can be set in **Roll length (change default)**.

  Setting the Default Value of the Amount of Roll Paper Left when Managing by the Barcode

Follow the steps below when setting **Manage remaining roll amount** to **Barcodes**.

1. Tap (**Setup**) on Home screen of operation panel.

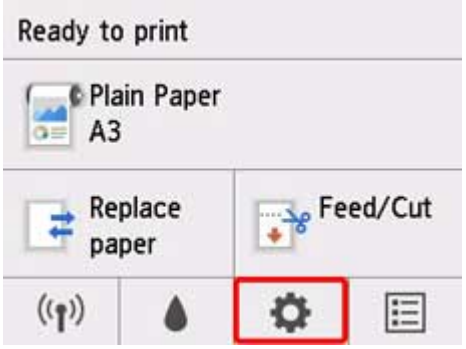

Note

- If the Home screen does not appear, press the **HOME** button.

2. Tap **Device settings**.

3. Tap **Paper-related settings**.

4. Tap **Manage remaining roll amount**.

5. Tap **Barcodes**.

6. Check the length of the roll paper.

Note

- The length of the roll paper to be displayed can be set in **Roll length (change default)**.

  Setting the Default Value of the Amount of Roll Paper Left when Managing by the Barcode

- If the length of the roll paper to be displayed is different from the length of the roll paper actually used, set the actual length.

7. Select the timing when the warning message appears.

Note

- If you increase the level in **Roll amount warning setting**, the warning message appears sooner.

Setting the Default Value of the Amount of Roll Paper Left when Managing by the Barcode

When you select **Barcodes** in **Manage remaining roll amount** and if you feed roll paper on which no barcode is printed, such as new roll paper, the screen to enter the roll paper length (remaining amount) appears.

In this screen, the length (remaining amount) of default value appears. If the length is not correct, tap the screen and enter a correct length.

When you want to change the length (remaining amount) of default value, follow the steps below.

1. Tap paper settings display area on Home screen of operation panel.

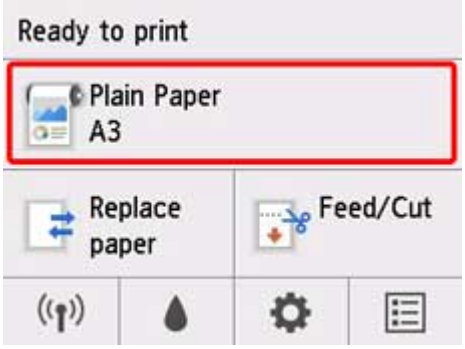

Note

- If the Home screen does not appear, press the **HOME** button.

2. Tap **Paper settings**.

3. Tap **Advanced**.

4. Tap **Roll length (change default)**.

Managing by Estimating the Amount of Roll Paper Left

When you set **Manage remaining roll amount** to **Warning message only** in **Device settings** on the Home screen, if the amount of roll paper left decreases, the Status lamp on the operation panel lights up orange and the warning message is displayed. The barcode is not printed.

The time to display warning message can be set in **Roll amount warning setting**. If you increase the level in **Roll amount warning setting**, the warning message appears sooner.

Important

- If the type of paper is not selected correctly, the amount of roll paper left may not be estimated correctly.
- When using the types of paper which are not displayed on "Paper Information List," set the paper thickness and the size of paper core with Media Configuration Tool.
  - Media Configuration Tool Guide (Windows)
  - Media Configuration Tool Guide (macOS)

Specifying the Ink Drying Time for Rolls

When you are using paper that takes longer for ink to adhere, ink may be transferred onto the paper surface during ejection, soiling it. In that case, you may be able to improve the condition by setting the time to wait for the ink to dry after printing.

Note

- If the cutter touches the print surface on which the ink is not dry, the paper surface may become scratched or soiled, or the paper surface may rub when the paper falls and the surface may become soiled.

  To wait for the ink to dry without allowing printed materials to fall after printing, set **Cutting mode** on the printer menu to **Eject cut**. (See "Specifying the Cutting Method for Rolls.")

- The settings can also be made from the operation panel on the printer. From (**Setup**) on the Home screen, select **Device settings**>**Paper-related settings**>**Advanced paper settings**>(media types selection) and set **Pause between scans** or **Pause between pages**.

Windows

1. Display the printer driver dialog box.

   (See "How to Open the Printer Driver Setup Window.")

2. Select **Main** sheet and click **Specify...** for **Media Type**.

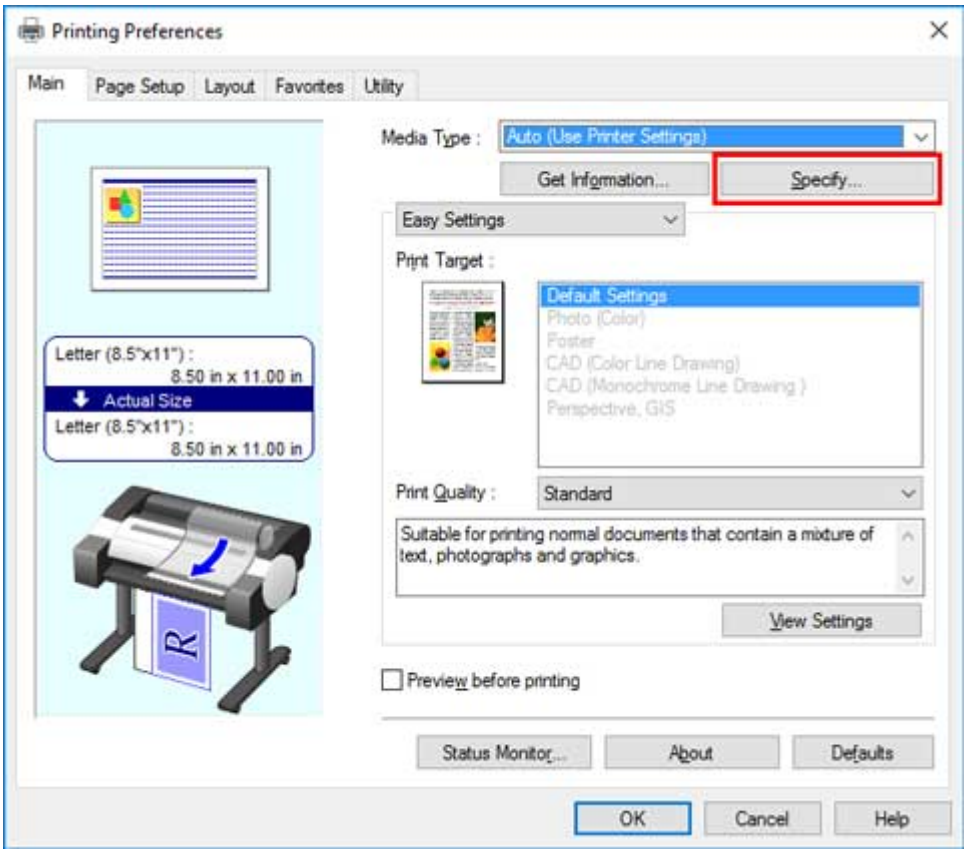

3. In the **Paper Detailed Settings** dialog box displayed next, select the desired values from the lists for **Between Pages** and **Between Scans** in **Drying Time**, and then click **OK**.

   (See "Main Tab Description.")

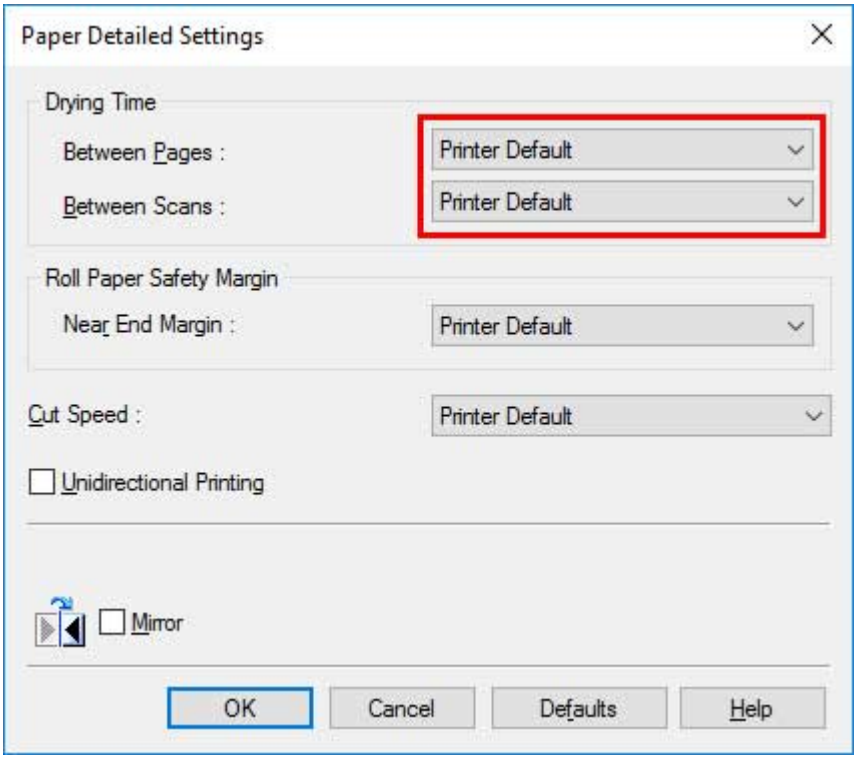

macOS

1. Choose **Print** in the application menu.

2. Select **Paper Detailed Settings** panel.

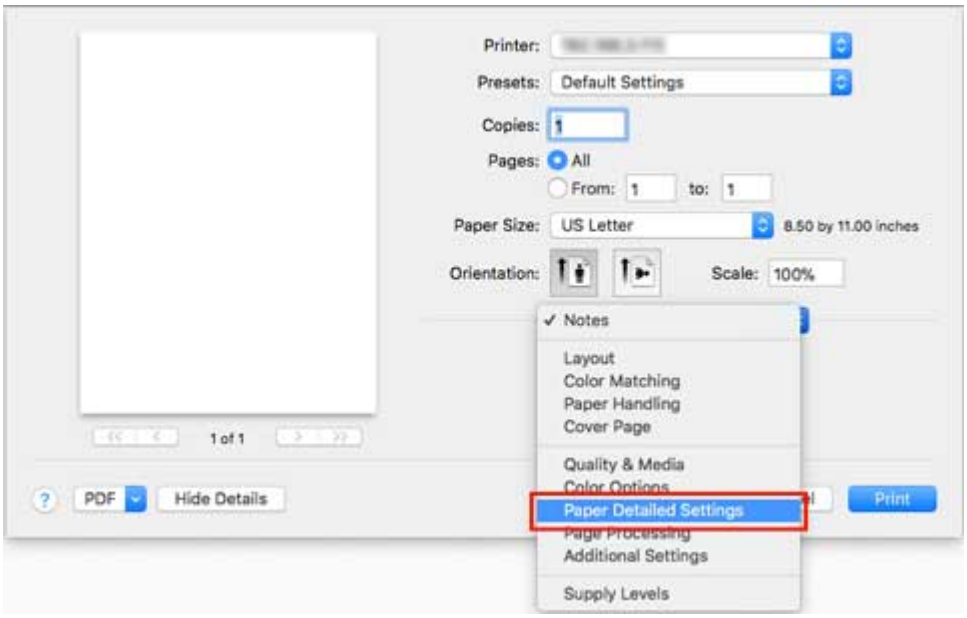

3. Select desired values from lists for **Dry Time (Between Pages)** and **Dry Time (Between Scans)**.

(See "Paper Detailed Settings.")

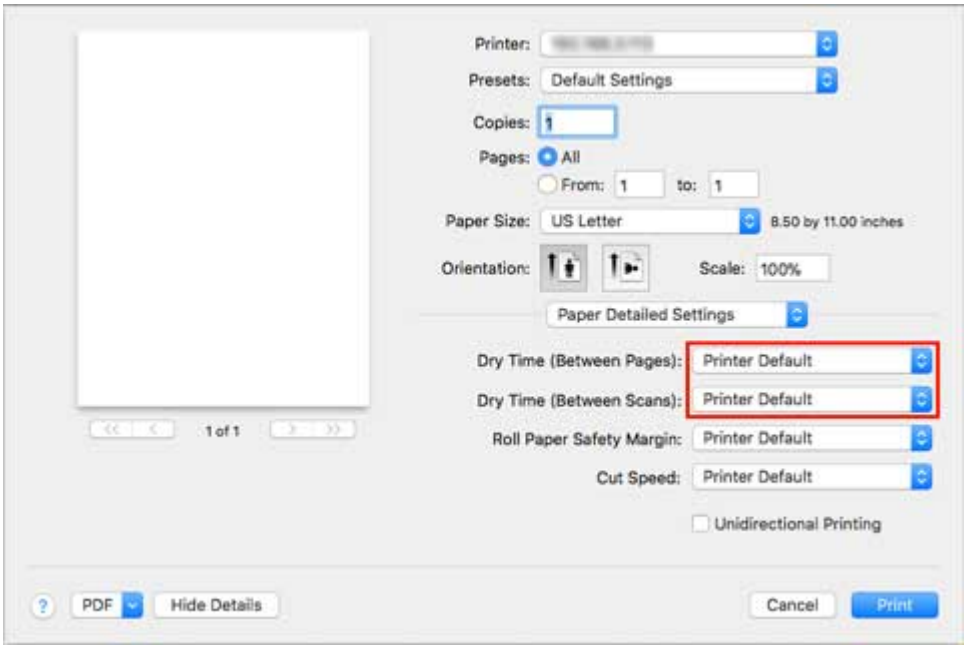

Specifying the Cutting Method for Rolls

How rolls are cut after ejection varies depending on printer settings.

- **Automatic cut**

  The roll is automatically cut by the cutter blade according to the printer driver settings.

  - Printer Setting

    Tap paper settings display area >**Paper settings**>**Advanced**>**Cutting mode**>**Automatic cut**

  - Driver Setting

    Automatic Cutting>**Yes**

    - See "Cutting Roll Paper after Printing" (Windows).
    - See "Cutting Roll Paper after Printing" (macOS).

- **Eject (when the paper surface is being scratched / to wait for ink to dry)**

  Select this to move the cutter by operation panel operation and cut paper. With **Automatic cut**, the paper drops and may rub against the basket, resulting in damage to the print surface, but you can cut using this method and supporting the paper so that it does not drop to avoid damage to the paper. Also, you can prevent paper that has not dried from dropping by visually checking the ink has dried, and then cutting the paper.

  After printing, tap **Cut paper** and cut the roll paper on the cutter blade.

  - Printer Setting

    Tap paper settings display area >**Paper settings**>**Advanced**>**Cutting mode**>**Eject cut**

  - Driver Setting

    Automatic Cutting>**Yes**

    - See "Cutting Roll Paper after Printing" (Windows).
    - See "Cutting Roll Paper after Printing" (macOS).

- **Manual (when using media that cannot be cut with the cutter blade)**

  Select this if the paper cannot be cut on the cutter blade.

  Cut each page from the roll using scissors. For continuous printing (if you will cut each page later), select **Automatic Cutting**>**Yes** or select **Print Cut Guideline**.

  - Printer Setting

    Tap paper settings display area >**Paper settings**>**Advanced**>**Cutting mode**>**User cut**

  - Driver Setting

    Automatic Cutting>**No**, **Yes**, **Print Cut Guideline**

    - See "Cutting Roll Paper after Printing" (Windows).
    - See "Cutting Roll Paper after Printing" (macOS).

- **Paper cutting (to have the roll cut at your specified position)**

  Select this when you want to cut the roll paper by operating the cutter blade using the operation panel after printing with **No** or **Print Cut Guideline** selected in **Automatic Cutting** in the printer driver.

  Otherwise choose this option if you want to cut the roll edge after loading a roll.

  - Printer Setting

    Tap paper settings display area >**Feed/cut**>**Cut paper**>**Yes**

  - Driver Setting

    Automatic Cutting>**No**, **Yes**, **Print Cut Guideline**

    - See "Cutting Roll Paper after Printing" (Windows).
    - See "Cutting Roll Paper after Printing" (macOS).

Note

- Automatic and Eject are valid only when you have selected **Automatic Cutting**>**Yes** in the printer driver.
- With Eject, printing does not resume after a series of jobs have been printed continuously until the roll is cut.
- **Eject cut** or **User cut** is the preset selection in **Cutting mode** for some types of paper. For this paper, we recommend keeping the preset cutting mode.
- If documents printed using Automatic, Eject, or manual cutting are short, rolls are advanced a specific amount before cutting to prevent problems with cutting and paper ejection. This may create a wider bottom margin, in some cases.

Cut rolls manually in the following cases:

Eject (when the paper surface is being scratched / to wait for ink to dry)

Important

- When cutting wide printed documents after ejection, have two people support the documents. If the paper drops, printed documents may be damaged.
- Do not lift the paper when holding printed documents before cutting. If the paper rises, it may affect the printing quality or cause rough cut edges.

Note

- Once the following step has been performed, the procedure can be started from step 7 the next time.
  - Printing the second and subsequent times
  - Printing after replacing with the same type of paper

1. Tap paper settings display area on Home screen of operation panel.

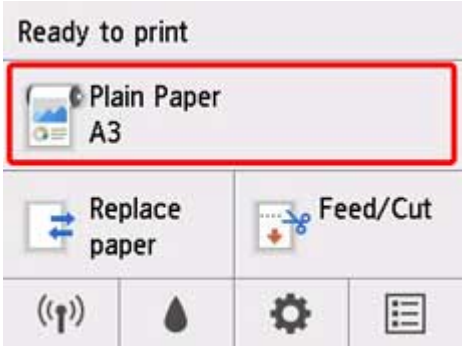

Note

- If the Home screen does not appear, press the **HOME** button.

2. Tap **Paper settings**.

3. Tap **Advanced**.

4. Tap **Cutting mode**.

5. Tap **Eject cut**.

6. Print the job.

   When printing is finished, the printer will stop without cutting.

7. While holding the printed document from the bottom edge to prevent it from dropping, tap **Cut paper** to cut the roll paper.

Manual (when using media that cannot be cut with the cutter blade)

Note

- Once the following step has been performed, the procedure can be started from step 8 the next time.
  - Printing the second and subsequent times
  - Printing after replacing with the same type of paper

1. Tap paper settings display area on Home screen of operation panel.

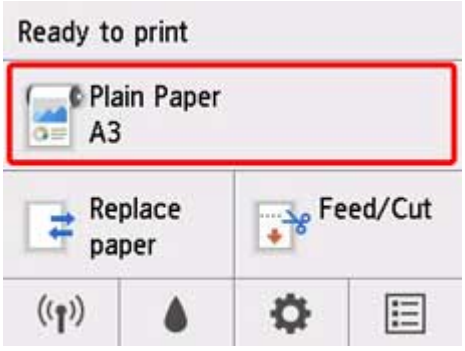

Note

- If the Home screen does not appear, press the **HOME** button.

2. Tap **Paper settings**.

3. Tap **Advanced**.

4. Tap **Cutting mode**.

5. Tap **User cut**.

6. When **Do you want to set to detect the leading edge of the paper?** is displayed, select **Detect (recommended)**.

7. Print the job.

   The printer stops advancing the paper after printing.

8. Tap **Advance paper**.

   Roll paper is fed to the specified cut position and then automatically stopped.

9. Cut the roll paper manually with scissors or the like.

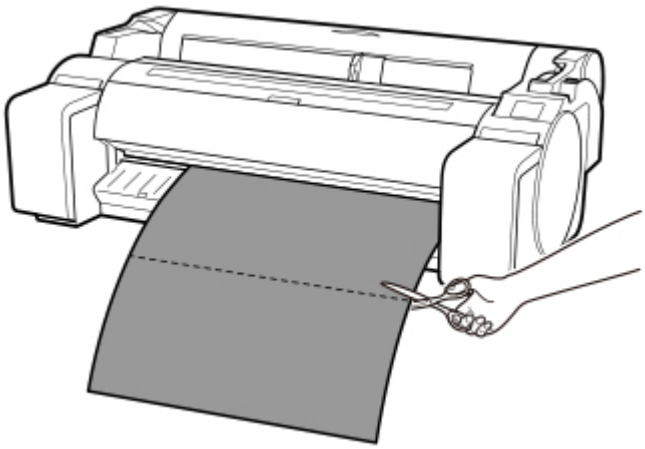

10. Tap **OK**.

After the roll is rewound, it stops automatically.

Paper cutting (to have the roll cut at your specified position)

1. Tap Feed/Cut on Home screen of operation panel.

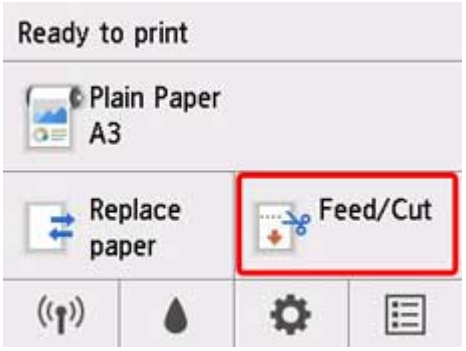

Note

- If the Home screen does not appear, press the **HOME** button.

2. Tap or touch **Advance** or **Rewind** to feed roll paper to desired cutting position.

3. Tap **Cut paper**.

4. Tap **Yes**.

After the roll paper is cut, it is rewound automatically.

Cutting the Leading Edge of Roll Paper Automatically

If the leading edge of the paper is cut crooked or is not cut straight when roll paper is loaded, it will not print correctly. If this happens, you can cut the leading edge of the paper straight when loading a paper roll by using **Trim edge first** in the operation panel menu.

The following settings are available for **Trim edge first**.

- **Auto**

  If the leading edge of the paper is cut crooked and is not cut straight when loading roll paper, cut the leading edge straight and eject the fragment of paper to prevent printing on the platen and soiling the printer.

  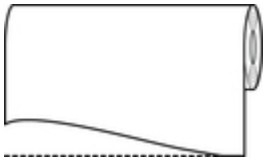

- **On(Preset Length)**

  The amount to cut from the leading edge of the paper varies depending on the media type and is cut to a prescribed length. For the leading edge precut length, see "Paper Information List".

- **On(Input Length)**

  The amount to cut from the leading edge of paper is specified in the control panel. The amount to cut from the leading edge can be specified in the range of lengths displayed in the control panel. The range of lengths differs according to the media type.

  Note

  - The amount to cut from the leading edge of paper cannot be set shorter than the length displayed in the control panel.

- **Manual**

  The amount to cut from the leading edge of paper can be adjusted by using the operation panel.

  To cut the paper after adjusting, tap **Cut paper** and select Yes.

  After cutting the paper, tap **Complete paper loading**.

  Note

  - If you do not tap **Complete paper loading** after cutting the paper, you cannot print the next job.

- **Off**

  The edge is not cut and scraps are not removed.

Follow these steps to change the **Trim edge first** setting.

1. Tap paper settings display area on Home screen of operation panel.

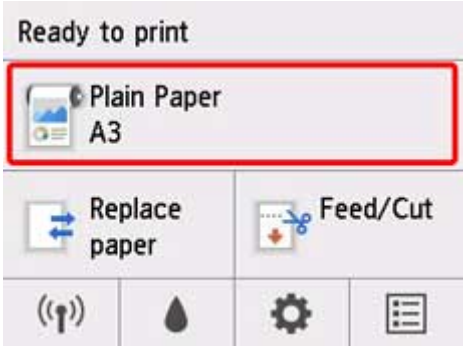

Note

- If the Home screen does not appear, press the **HOME** button.

2. Tap **Paper settings**.

3. Tap **Advanced**.

4. Tap **Trim edge first**.

5. Tap desired **Trim edge first** settings.

   This setting takes effect the next time you load a roll.

Reducing Dust from Cutting Rolls

If the paper tends to generate dust when cut, such as with Backlit Film, you can reduce flying dust by setting **Cut-dust reduction** to **ON** from the operation panel menu, which will coat the leading and trailing edges of the printed document with ink. As a result, you can reduce problems with the print head. You can set **Cut-dust reduction** according to the media type.

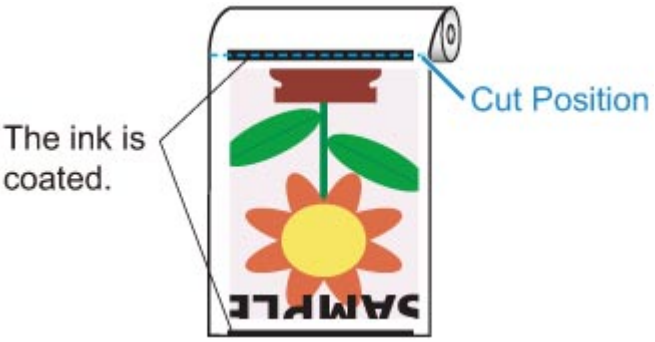

Important

- Do not set **Cut-dust reduction** to **ON** for paper that wrinkles easily, such as **Plain Paper** or lightweight paper. If not cut properly, the paper may jam.
- Borderless printing is not available when **Cut-dust reduction** is set to **ON**. When performing borderless printing, set **Cut-dust reduction** to **OFF**.

Follow these steps to set **Cut-dust reduction** to **ON**.

1. Tap paper settings display area on Home screen of operation panel.

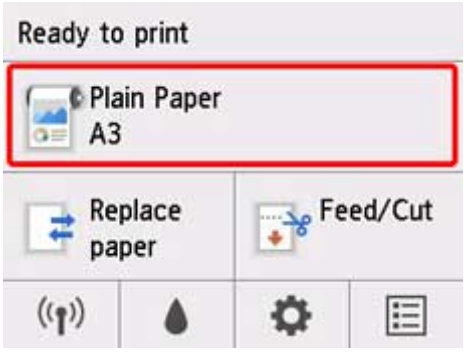

Note

- If the Home screen does not appear, press the **HOME** button.

2. Tap **Paper settings**.

3. Tap **Advanced**.

4. Tap **Cut-dust reduction**.

5. Tap **ON**.

Detecting Roll Paper was Replaced While the Power was Off

When you turn the printer on, it can confirm whether the roll paper was replaced while the power was off.

From **Device settings** on the Home screen, set **Auto feed at power on** to **Enable** to detect the position of the roll paper's leading edge when the power is turned on. If the position of the roll paper's leading edge is over 1 mm since the last time the power was turned off, the printer determines that the roll paper has been replaced, and then starts feeding paper automatically to detect the paper width and the barcode for the management of unused roll paper.

Note

- Setting **Auto feed at power on** to **Enable** causes the operations that can be done after turning on the power to take longer since the printer must detect the leading edge of the roll paper.

Follow these steps to set **Auto feed at power on** to **Enable** as follows.

1. Tap (**Setup**) on Home screen of operation panel.

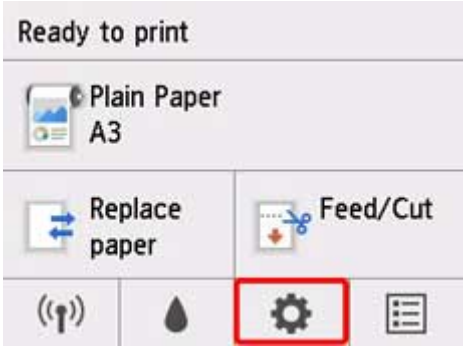

Note

- If the Home screen does not appear, press the **HOME** button.

2. Tap **Device settings**.

3. Tap **Paper-related settings**.

4. Tap **Auto feed at power on**.

5. Tap **Enable**.

Handling sheets

- Loading Sheets in the Printer
- Changing the Type of Paper
- Printing From a Desired Starting Point
- Removing Sheets
- Remove a Jammed Sheet

Loading Sheets in the Printer

Follow these steps to load sheets in the printer.

Important

- One sheet of paper can be loaded in the feed slot at a time. Do not load more than one sheet at a time. This may cause paper jams.
- Before feeding paper or printing, make sure the sheet is flat against the roll paper cover. The sheet may jam if it curls before feeding or printing and the trailing edge drops toward the front.
- Paper that is wrinkled or warped may jam. If necessary, straighten the paper and reload it.
- Load the paper straight. Loading paper askew will cause an error. (See "1317.")

Note

- Before loading cut sheets, check whether or not the inside of the top cover or the output guide is soiled. If these areas are dirty, we recommend cleaning them in advance. (See "Cleaning Inside the Top Cover.").
- Store unused paper in the original package, away from high temperature, humidity, and direct sunlight.

1. Select sheets as the paper source.

   - **If a print job was received**

     Sheets are automatically selected, and the media type and size specified by the print job are shown on the operation panel.

     Tap **OK** and **Load paper**.

   - **If no print job was received**

     1. Tap **Load paper** or **Replace paper**.

     2. Tap **Load cut sheet** or **Replace cut sheet**.

     #### Note

     - If the Home screen does not appear, press the **HOME** button.

   #### Note

   - If any paper has been advanced that will not be used, a message is shown requesting you to remove it.

Follow the instructions on the screen to remove the paper, and redo the operation.

2. Slide the width guide (A) to align it with the mark for the size of paper you will load.

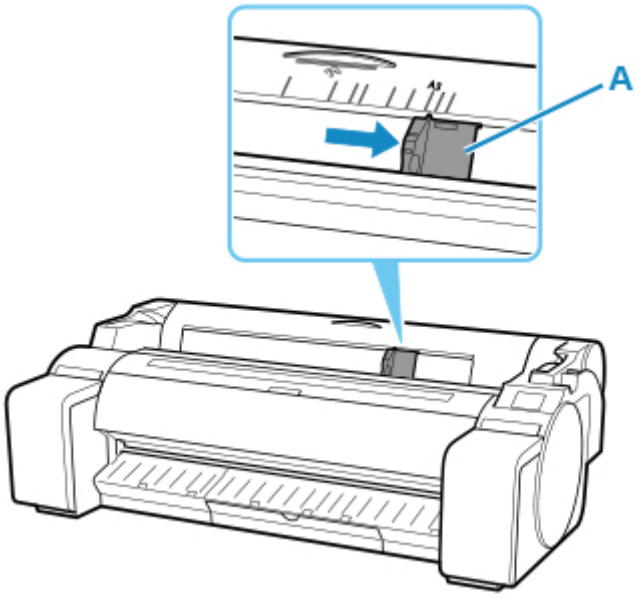

3. Load a single sheet printing-side up in the feed slot, with the right edge aligned with the paper alignment line (A) to the right of the roll paper cover.

   Insert the paper until the leading edge makes contact.

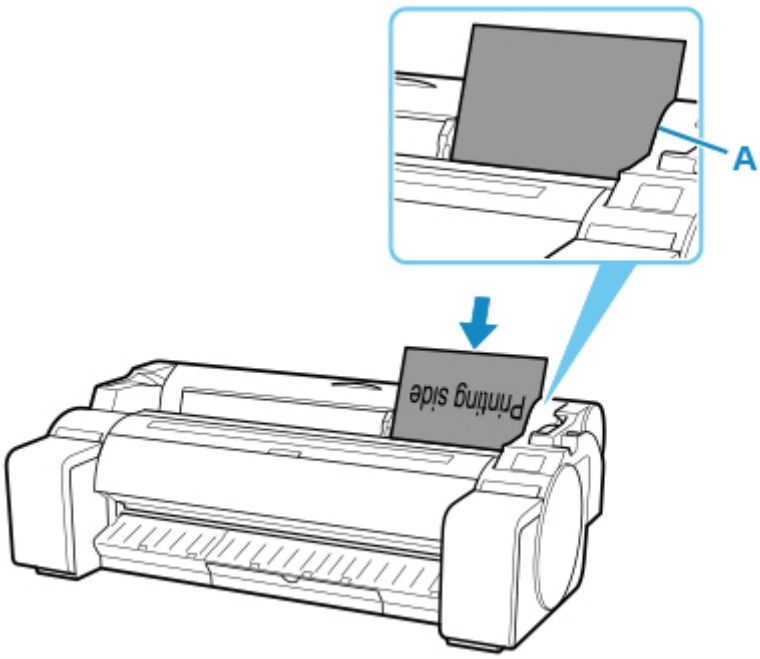

4. Move the width guide (A) carefully to match the size of paper loaded.

   Set the width guide against the edge of the paper to prevent the paper from becoming crooked or wrinkled.

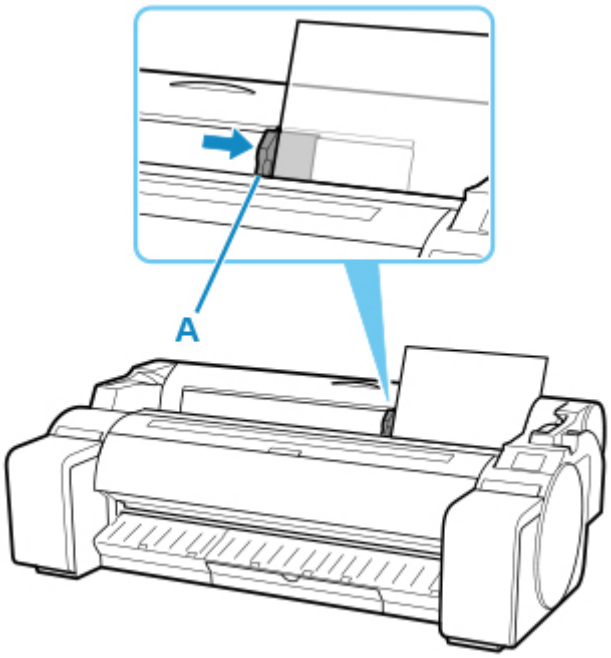

5. Tap **Start feeding**.

- **If a print job was received**

  Tap **Start feeding** to feed the paper and begin printing.

- **If no print job was received**

  A menu for selecting the media type appears.

  Select the media type loaded and tap **OK**.

  The printer now starts feeding the paper.

Note

- For details on media types that you can select, see "Paper Information List."

Printing From a Desired Starting Point

Print on sheets from a desired starting point as follows.

Setting Detect paper width to Disable

1. Tap paper settings display area on Home screen of operation panel.

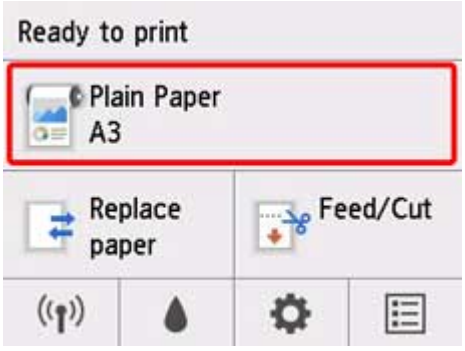

Note

- If the Home screen does not appear, press the **HOME** button.

2. Tap **Paper settings**.

3. Tap **Advanced**.

4. Select **Detect paper width** and tap **Disable**.

Load paper in the desired position to start printing from

Follow these instructions to load paper at the desired starting position for printing when **Detect paper width** is set to **Disable**.

1. If you did not send a print job in advance, a menu for selection of the type of paper is displayed.

   Tap media type loaded.

   Note

   - If a print job was received before the paper was fed, the media type and size specified by the job are shown on the operation panel.

     Go to step 2.

2. When "**[Detect paper width] is disabled. Do you want to keep it disabled and continue?**" appears on operation panel, tap **Keep it disabled and continue**.

3. Open top cover and check position where paper is loaded.

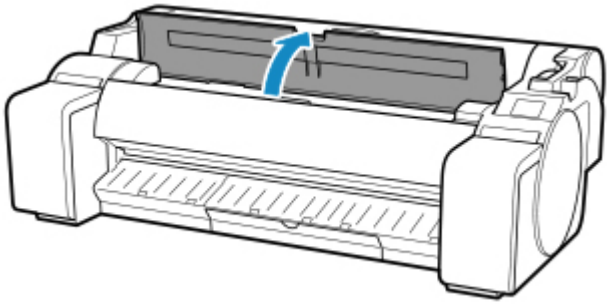

To start printing from the current position, close the top cover.

To reposition the paper, push the release lever back.

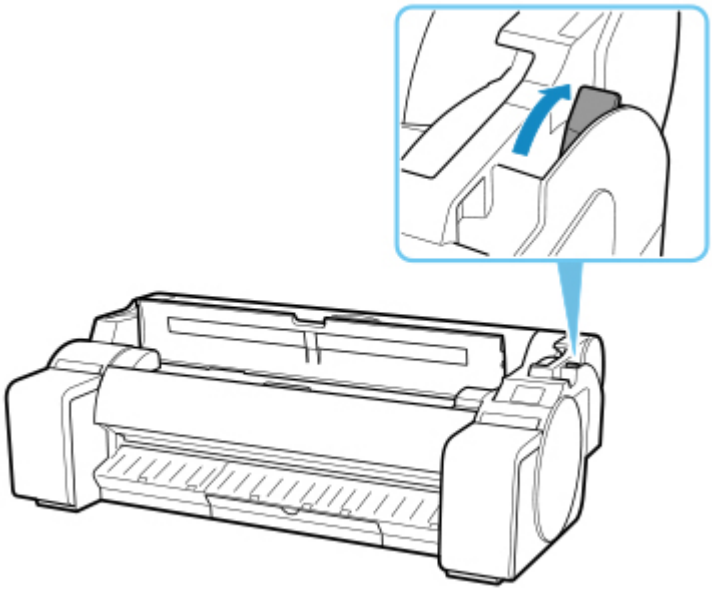

4. Load paper keeping right edge of paper aligned with extended line of paper alignment line (A) on right side of printer and position from which to start printing aligned with groove (B) at far end of platen.

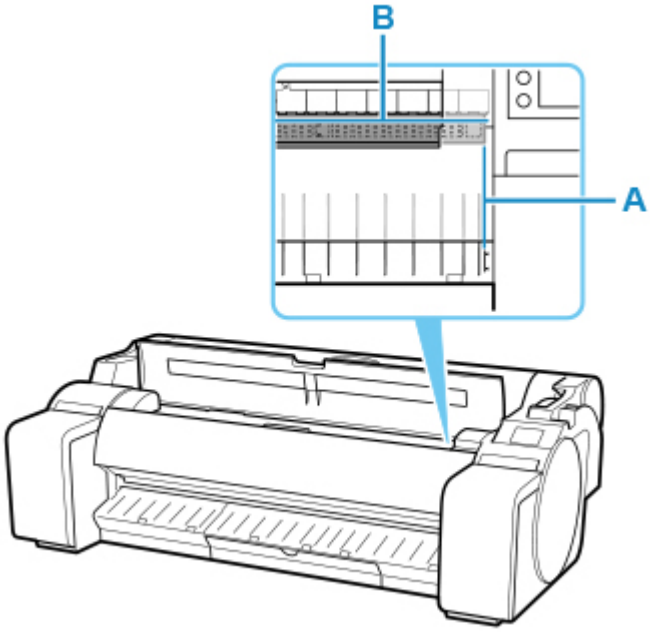

5. Pull the release lever forward and close the top cover.

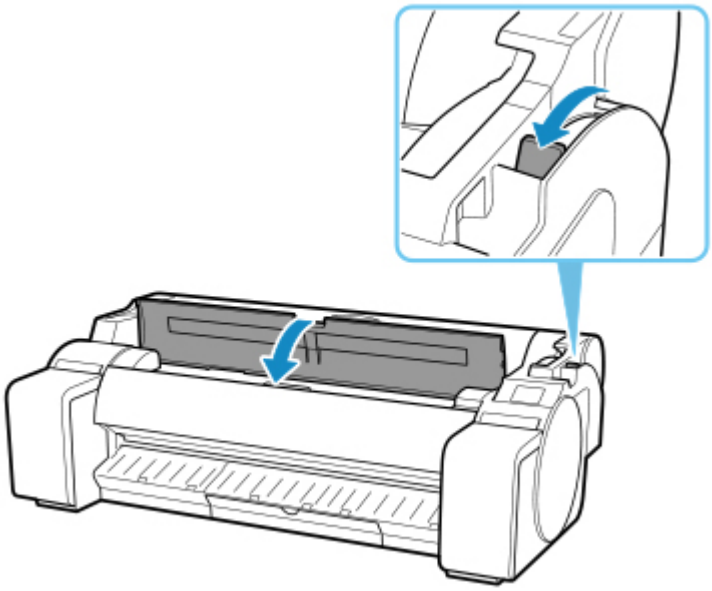

6. When screen for selecting paper size appears, select size of paper loaded.

Removing Sheets

Remove sheets from the printer as follows.

1. Tap paper settings display area on Home screen of operation panel.

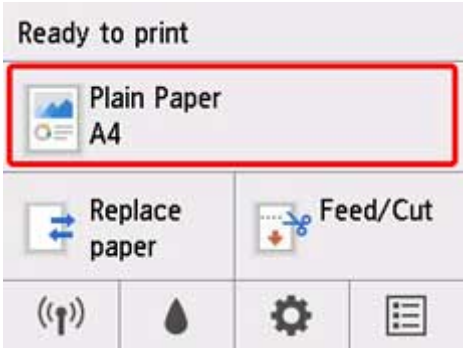

Note

- If the Home screen does not appear, press the **HOME** button.

2. Tap **Remove paper**.

3. Check operation panel message and tap **Yes**.

   The paper is ejected from the front of the printer.

4. Holding the paper, push the release lever back and remove the sheet.

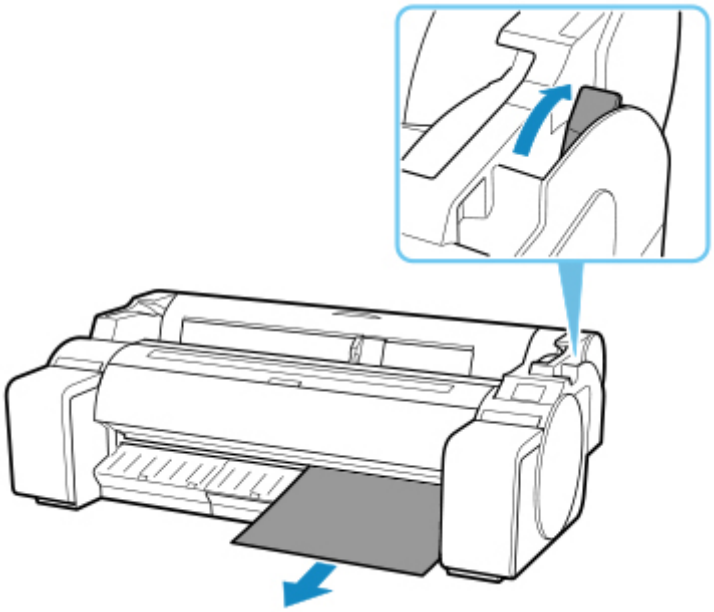

5. Pull the release lever forward.

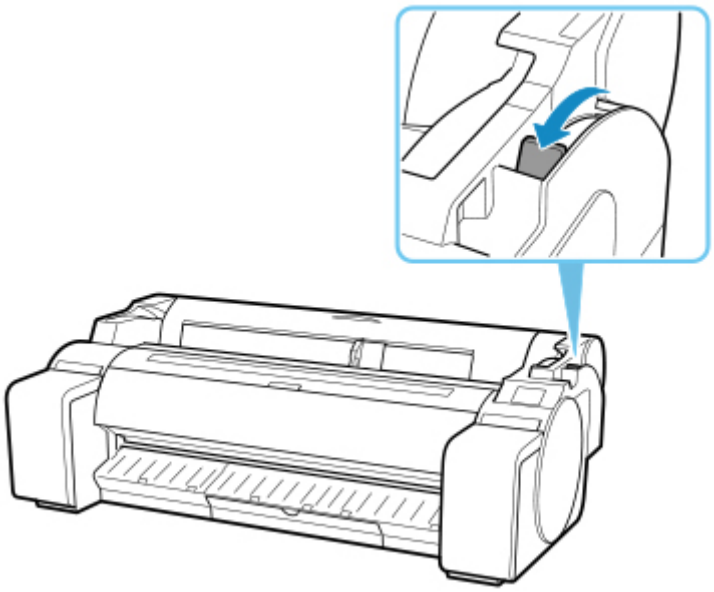

Basket

- Using the Basket

Using the Basket

This section describes how to use the basket.

Note

- There are 2 types of stands that can be used with this printer: printer stand SD-32 and printer stand SD-31.
- The explanation for the stand uses the illustrations for printer stand SD-32. Note that the illustrations may differ from the type you are using.

- **When storing printed documents on the basket**

  Use position (1). For details on how to use the Extended position which is a useful function for retrieving printed matter, refer to the note regarding the Extended position. (See "Convenient basket usage.")

- **When the basket is not used, when loading paper, or when moving the printer**

  Use position (2).

  When moving the printer, always lift the Support Rod to Extended position A before putting it in position (2), otherwise the basket may touch the floor and be soiled or damaged. (See "Switching to Extended position A.")

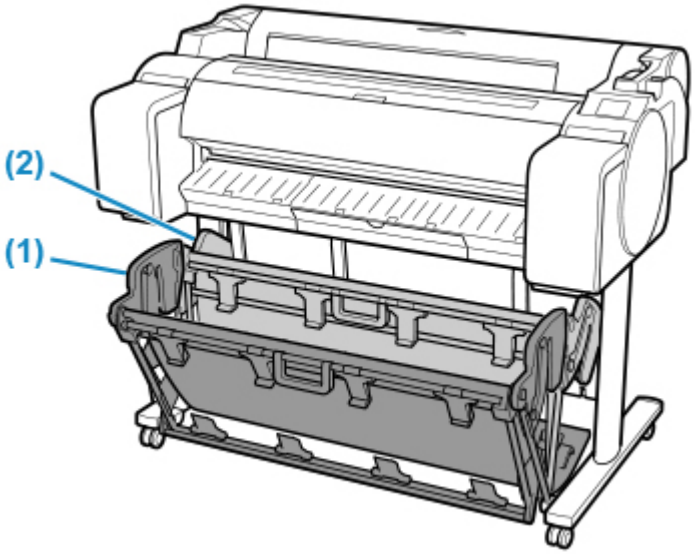

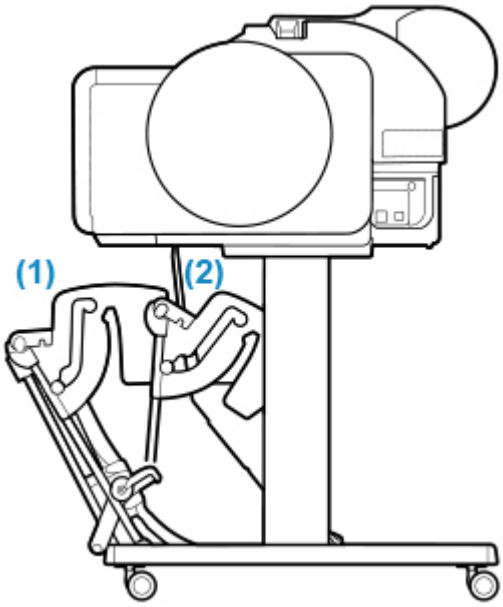

Important

- When storing printed documents on the basket, always use it in position (1). If you do not, printed documents may not be dropped into the basket, and the printed surface may become soiled.
- The number of sheets that can be collected in the basket is one. If printing multiple pages, print after removing each sheet.
- The basket can hold printed documents from paper up to 48 inches (1219.2 mm) long.
- If the cloth part of the basket becomes dirty, wipe off the dirt without washing. Washing it may affect the performance of the basket.

Convenient basket usage

When printing line drawings on plain paper, you can use the basket not only at the regular position but also at two kinds of extended positions convenient for catching printed material.

In these extended positions, the basket can collected up to approximately 20 sheets of printed material.

The paper sizes that can be used with these extended positions are shown in the table below. Use the best position that suits the paper size and orientation.

Important

- Use the regular position in the following situations. If you print multiple sheets in the regular position, remove the printed material from the basket one sheet at a time.
  - Paper other than plain paper
  - Paper sizes not listed in the following table and printed material other than line drawings
  - If the paper curls excessively due to the qualities of the paper or the usage environment
  - If the paper curls excessively near the end of a roll of paper
- Return the basket to the regular position after printing.

Extended position	Paper orientation	SD-31	SD-32
A	Portrait	ARCH E 36”x48”(914x1219mm) ARCH D 24”x36”(610x914mm) A0 841x1189mm A1 594x841mm	ARCH E 36”x48”(914x1219mm) ARCH D 24”x36”(610x914mm) A0 841x1189mm A1 594x841mm
B	Landscape	Unsupported	ARCH D 36”x24”(914x610mm) ARCH C 24”x18”(610x457mm) A1 841x594mm A2 594x420mm

Regular position

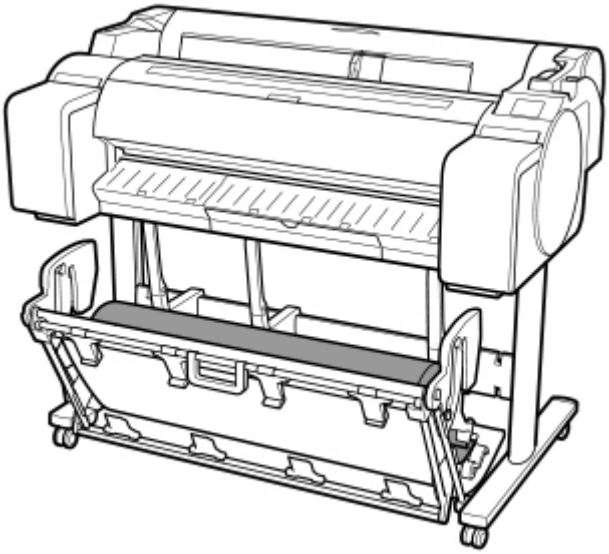

Extended position A

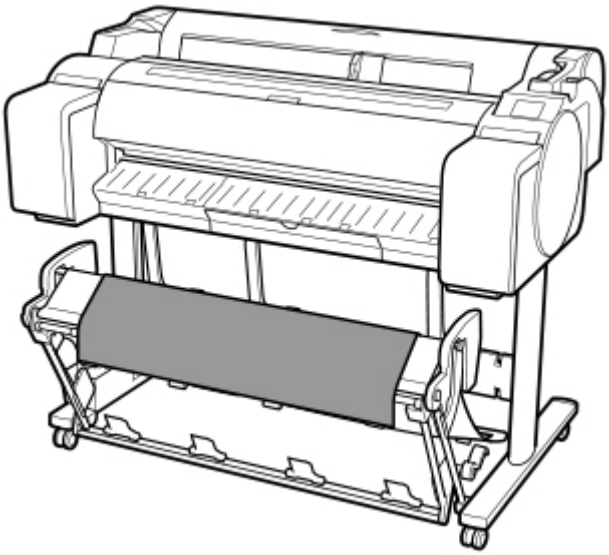

Extended position B (SD-32 only)

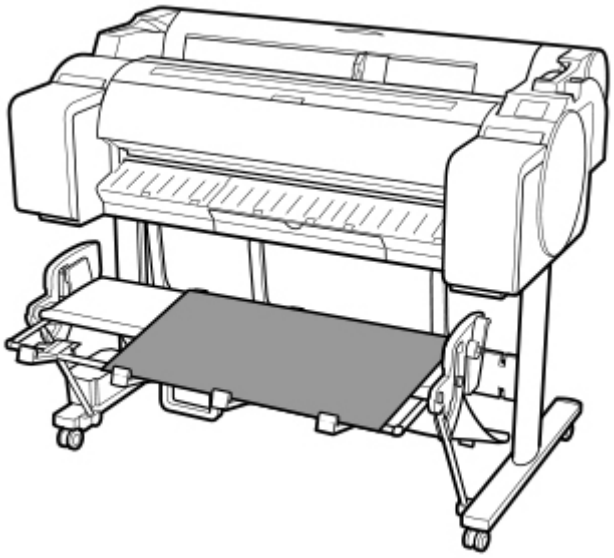

- **Switching to Extended position A**

  Switch the stacker to Extended position A as follows.

  1. Lift the Support Rod to the position shown (A) and switch the stacker to Extended position A.

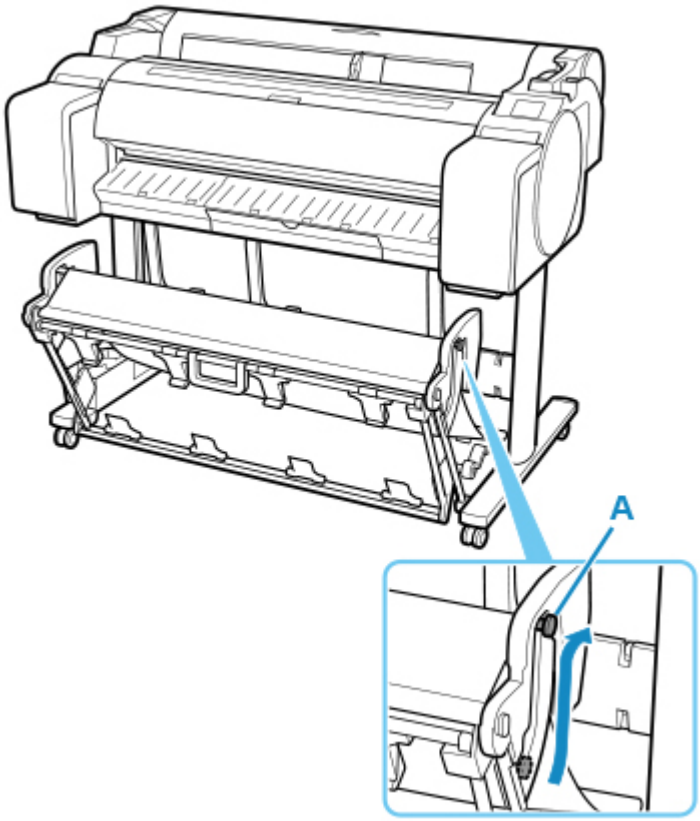

  2. When using 24-inch or A1 (portrait) roll paper, pull out the Adjustable Stopper (A).

     This completes the procedure for switching to Extended position A.

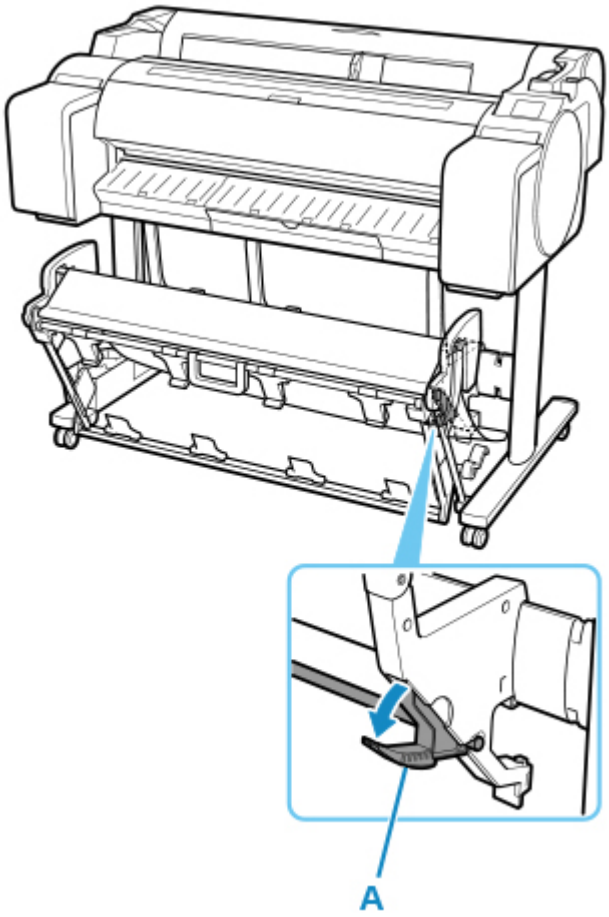

Once the printing has finished, use the following procedure to return to the regular position.

1. Lower the Support Rod to the position shown (A) to return to the regular position.

   If the Adjustable Stopper (B) is extended, retract it.

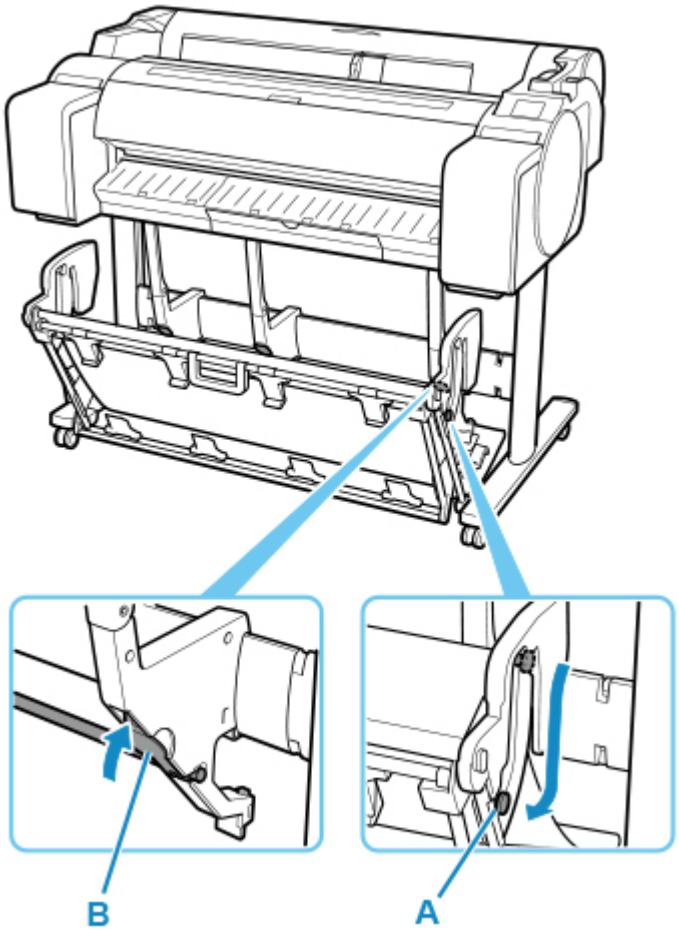

2. Return to the regular position.

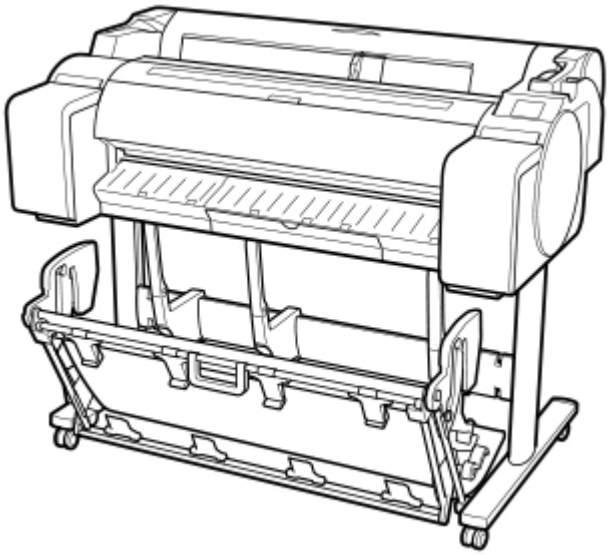

- **Switching to Extended position B (SD-32 only)**

  Switch the stacker to Extended position B as follows.

1. Grasp the basket handle (A) and pull out the basket so that it tilts towards you.

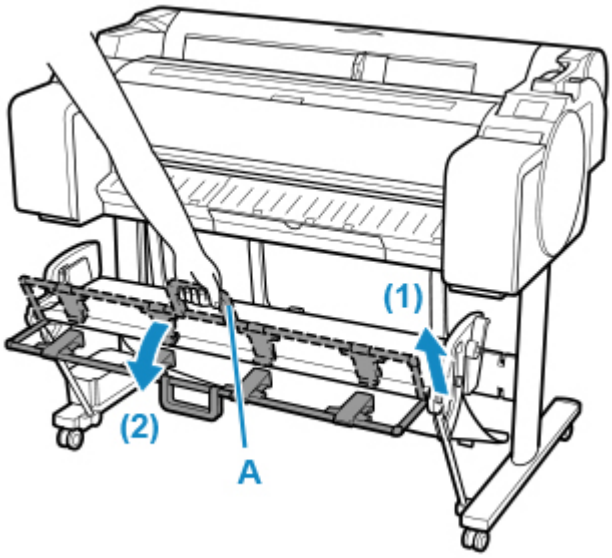

2. Open the Basket Ejection Guides (A).

   This completes the procedure of switching to Extended position B.

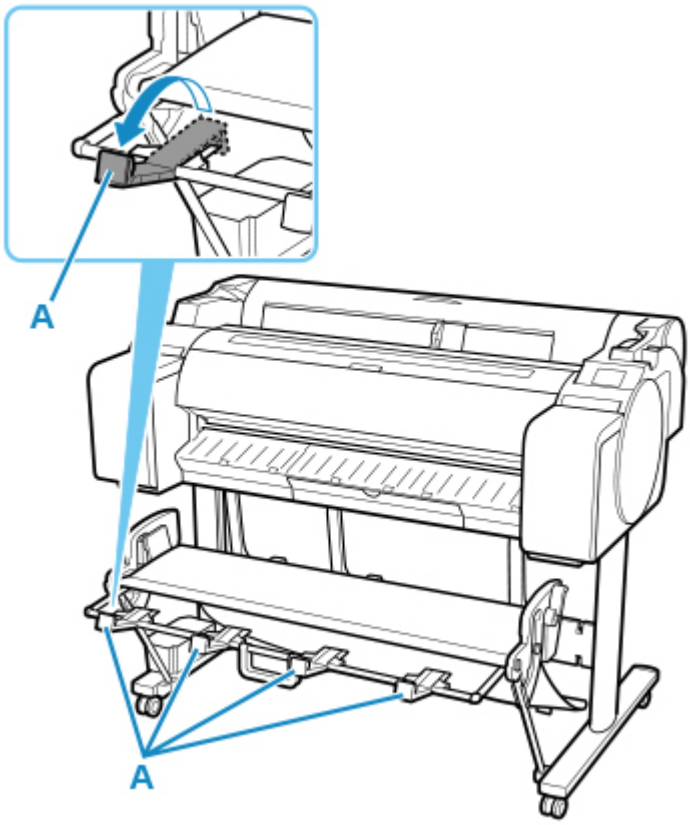

Once the printing has finished, use the following procedure to return to the regular position.

1. Push the Basket Ejection Guides (A) closed until it clicks into place.

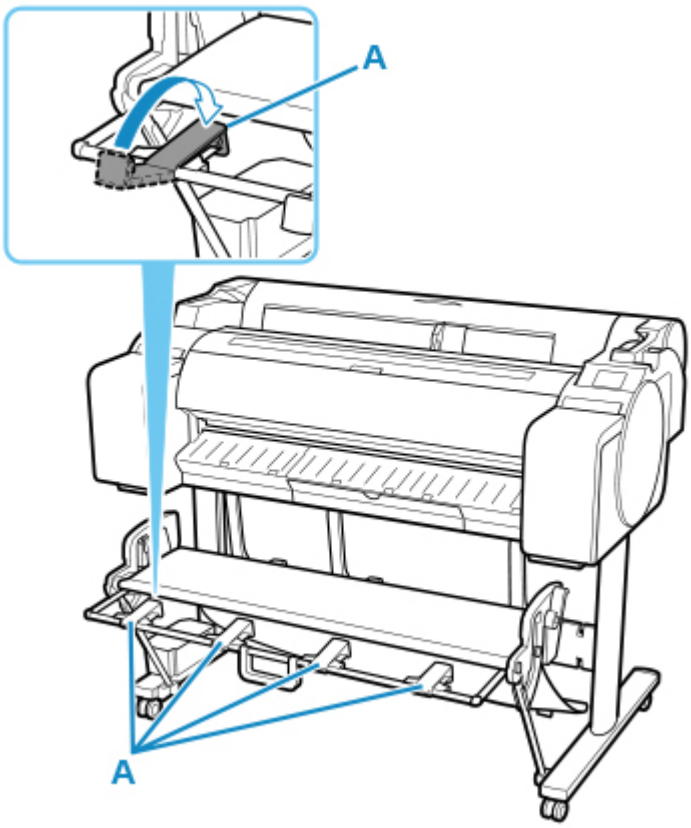

2. Hold onto the basket handle (A) and pull the basket release lever (B) towards you.

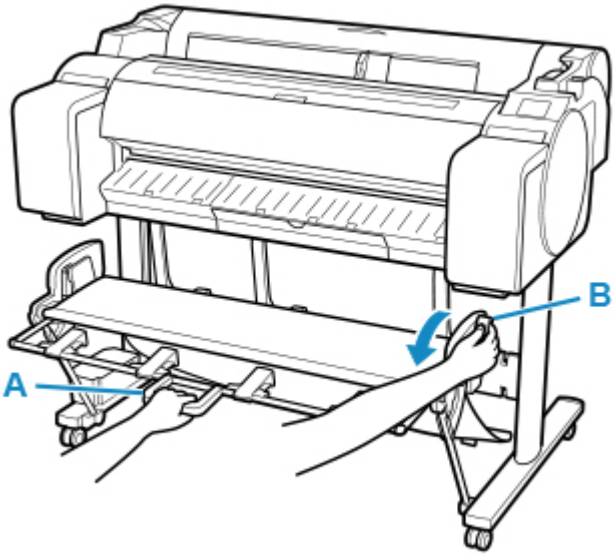

3. While continuing to hold the basket handle (A), slowly lower the basket.

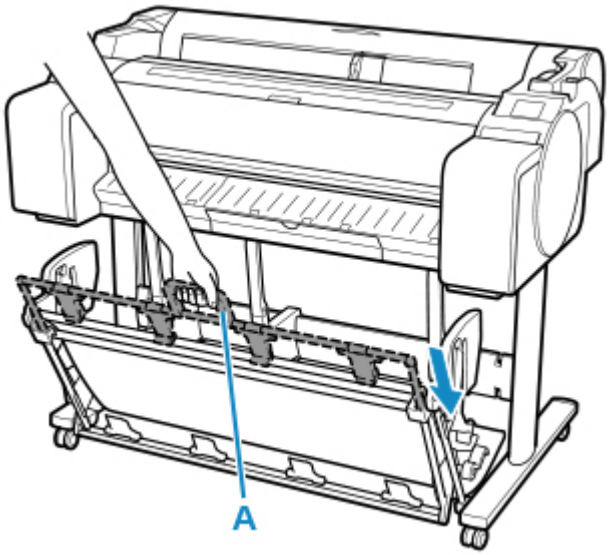

4. Return to the regular position.

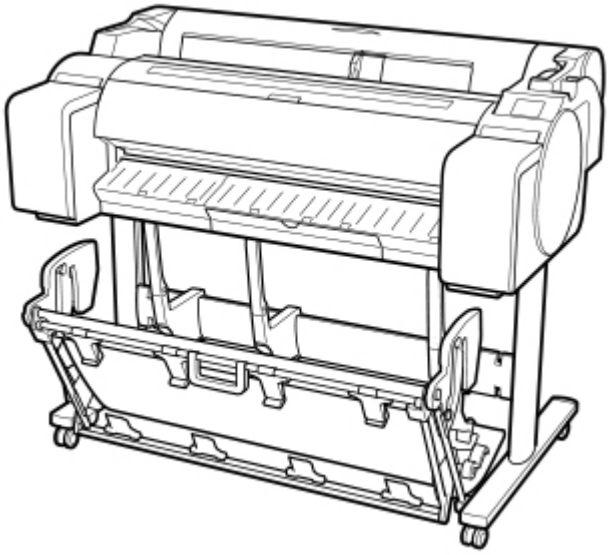

Changing Settings from Operation Panel/Web Browser

- **Operations and Touch Screen**
  - Operation Panel
  - Touch Screen
  - Checking Instructions During Printer Operations
- **Changing Settings from Operation Panel**
  - Printer Menu Operations
  - Menu Operations
  - Menu Structure
  - Changing Settings from Operation Panel
  - Setting Items on Operation Panel
  - HP-GL/2 Settings
  - Status Print
- **Changing Printer's Setting Using Web Browser**
  - Configuration Changes Using Web Browser
  - Changeable Setting Items Using Web Browser
  - Setting Password
  - Registering Printer's Root Certificate to Web Browser for SSL Communication (Remote UI)
  - Registering Printer's Root Certificate to Local Computer for SSL Communication
  - Generating Server Certificate (Self-signed Certificate)
  - Setting Mail Server
  - Receiving Printer Status by E-mail

Operations and Touch Screen

- Operation Panel
- Touch Screen
- Checking Instructions During Printer Operations

Operation Panel

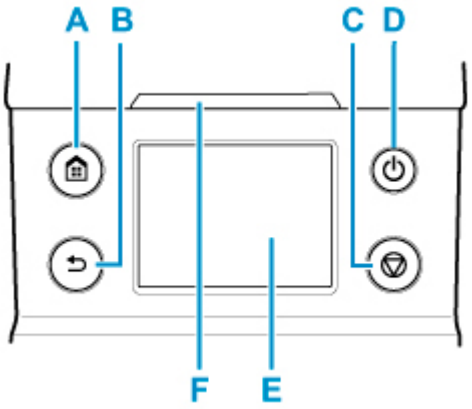

A: HOME button

The HOME screen appears.

Touch Screen

B: Back button

Displays the screen before the current screen.

C: Stop button

Cancels print jobs in progress and ends the ink drying period.

D: ON button/ON lamp

Turns the printer on and off.

Turning the Printer On and Off

The **ON** lamp is lit when the printer is on or in Sleep mode.

E: Touch Screen

Shows printer menus, as well as the printer status and messages. You can select menu items and display buttons by gently touching the screen with your fingertip.

Touch Screen

F: Status lamp

- Flashing (white)

  During printing, this lamp flashes when the printer is receiving or processing print jobs. Otherwise, this lamp flashes when the print job is paused or the printer is updating the firmware.

- Lit (orange)

  A warning message is displayed.

- Flashing (orange)

  An error message is displayed.

- Off

  There are no active print jobs, warnings, or errors.

Note

- When the printer is in Sleep mode, to restore the display, press the buttons on the operation panel or touch the touch screen.
- When Operation panel lock is enabled, touch screen operations are invalid. For details on Operation panel lock, see Changeable Setting Items Using Web Browser.

Touch Screen

After the printer starts up, the HOME screen appears on the touch screen.

From the HOME screen, you can check the printer status and select the maintenance, paper operations, settings, and other menus.

- Basic Touch Screen Operations

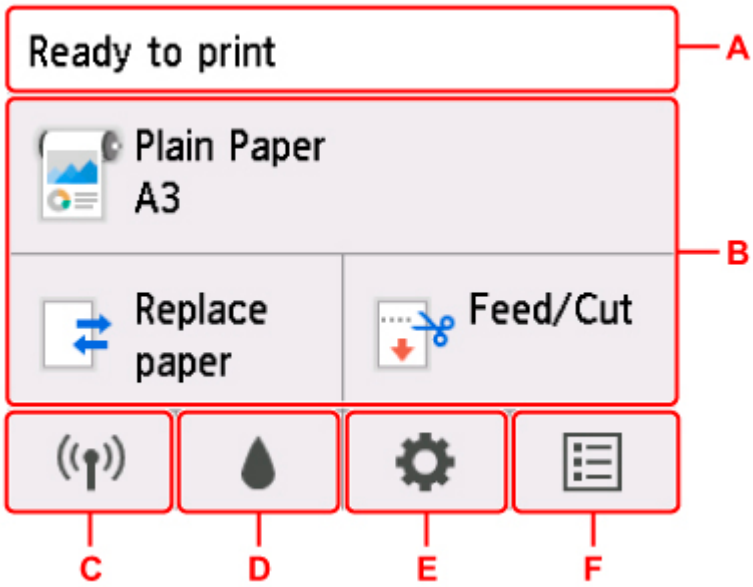

A: Printer Information Display Area

Displays the printer status, messages, and other information. Tap this item when a message appears to view the message on the list screen and to jump to the screen with detailed information and operations.

- Notification Messages

B: Paper Setting Display Area

Displays the information on loaded paper on the upper area. Tapping this option displays the menu relating paper and allows the paper settings. **Replace paper** and **Feed/Cut** frequently used in the menu appears on the lower area, and you can directly select.

C: Network

Displays the current network status. Select to display the basic network information or to change the network settings.

The icon differs depending on the network of use or the network status.

Wi-Fi is enabled and the printer is connected to the wireless router.

Note

- Depending on the signal state, the icon will change.

(Signal strength: 81 % or more): You can use the printer over a Wi-Fi without any problems.

(Signal strength: 51 % or more): The problem such as the printer cannot print may occur according to the network status. We recommends placing the printer near the wireless router.

(Signal strength: 50 % or less): The problem such as the printer cannot print may occur. Place the printer near the wireless router.

Wi-Fi is enabled but the printer is not connected to the wireless router.

Wired LAN is enabled.

Wireless Direct is enabled.

Wi-Fi and Wired LAN are disabled.

D: Ink information

Selects when checking current estimated ink levels or replacing ink tanks.

E: Setup

Selects when changing the printer settings, performing maintenance, or checking printer information.

F: Job management

Select when checking or deleting print jobs.

Basic Touch Screen Operations

You can select various functions and settings by gently touching and swiping the touch screen with your fingertip.

Important

- Take the following precautions when operating the touch screen. Otherwise, the touch screen may malfunction or become damaged.
  - Do not forcibly press the touch screen with your finger.
  - Do not press the touch screen with an object other than your finger (such as a ballpoint pen, pencil, fingernail, or other object with a sharp tip).
  - Do not operate the touch screen with wet or dirty hands.
  - Do not place objects on top of the touch screen.
- Do not place a protective film over the touch screen. Removing it can damage the touch screen.

Tap

Gently touch with your fingertip and then release.

Use this when selecting an item on the screen.

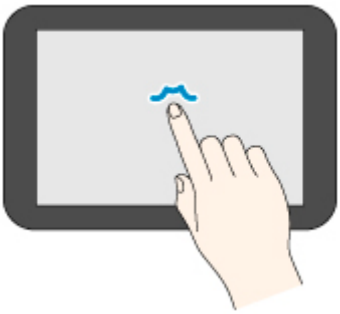

Touch

Gently touch with your fingertip.

To go (or return) to a menu or list, touch the directional mark.

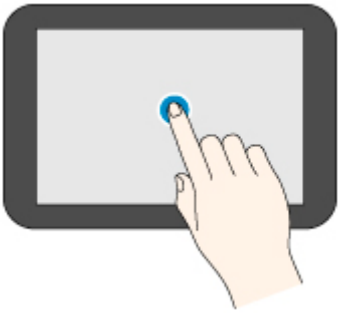

Flick

Drag and release your finger up, down, left, or right.

Use this to quickly scroll through a menu or list.

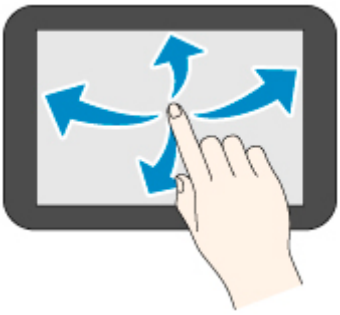

Drag

Move your finger up, down, left, or right while gently keeping it in contact with the touch screen.

Use this to move a menu or list while viewing it.

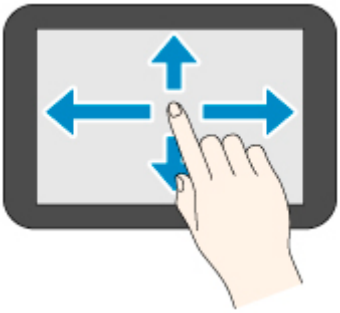

Notification Messages

When the ink is low or there is another notification, **New notice** appears in the printer information display area. Tap this to display the **Notice list** screen to view messages with the newest one appearing first. Tap a message to display the message details screen to view the details and take action.

Example: Notices on the maintenance cartridge

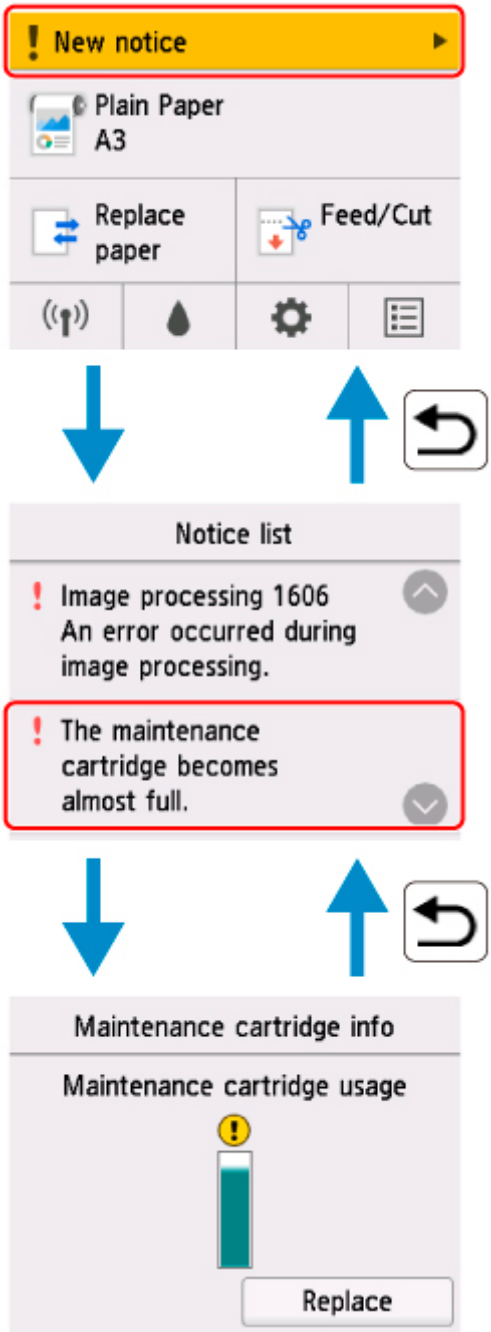

Checking Instructions During Printer Operations

You can refer to instructions on the touch screen when loading paper, replacing ink tanks, or performing other operations.

How to view instructions

Once you complete an action described in the instructions, the printer detects the action and switches to the next instruction screen.

Operation screens are switched every 3 seconds, and the sequence of operations is shown repeatedly.

For actions the printer cannot detect, tap **OK** to display the instruction screen for the next step.

Example: Ink tank replacement

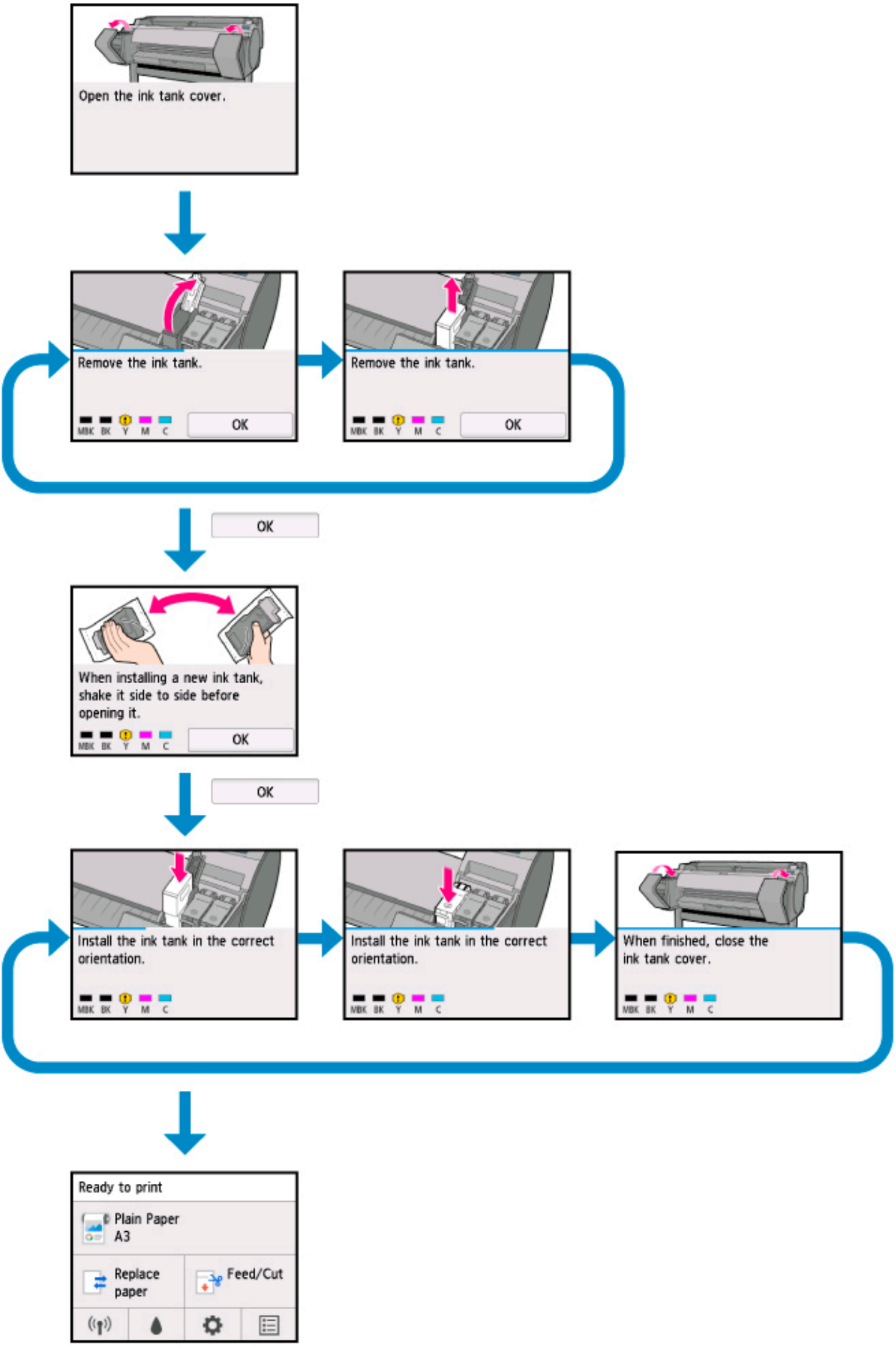
Open the ink tank cover.
Remove the ink tank.
MBK BK Y M C
OK
Remove the ink tank.
MBK BK Y M C
OK
OK
When installing a new ink tank, shake it side to side before opening it.
MBK BK Y M C
OK
OK
Install the ink tank in the correct orientation.
MBK BK Y M C
Install the ink tank in the correct orientation.
MBK BK Y M C
When finished, close the ink tank cover.
MBK BK Y M C
Ready to print
Plain Paper
A3
Replace paper
Feed/Cut

Changing Settings from Operation Panel

- Printer Menu Operations
- Menu Operations
- Menu Structure
- Changing Settings from Operation Panel
- Setting Items on Operation Panel
- HP-GL/2 Settings
- Status Print

Printer Menu Operations

On the HOME screen, the current status of the printer and buttons for displaying various menus are displayed.

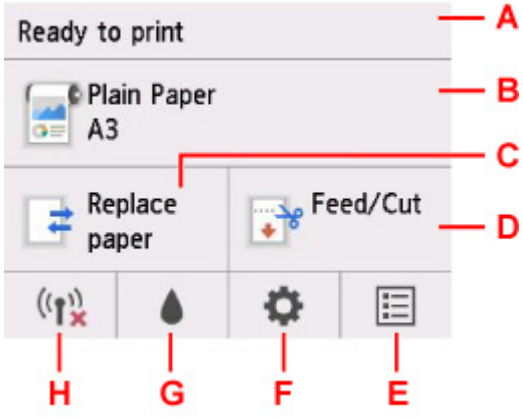

A. Printer status

Displays the current status (**Ready to print** / **Printing...**) of the printer.

B. Paper information

Displays the current paper information.

It is grayed out during printing.

Tap to display **Paper menu**.

C. **Replace paper**

It is grayed out during printing.

Tap this button to change the roll paper or to set the cut paper.

D. **Feed/Cut**

It is grayed out when paper feed mode is cut paper or during printing.

Tap this button to feed or cut roll paper.

E. **Jobs**

Tap to display **Job management** menu.

F. **Setup**

Tap to display **Setup** menu.

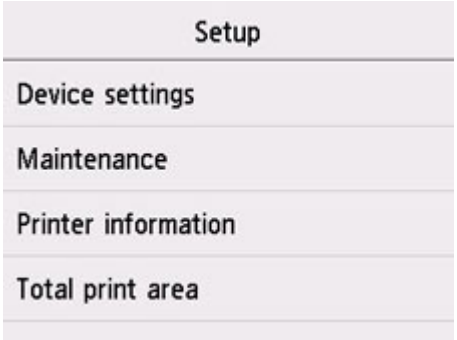

G. **Ink**

Tap to display the current ink level.

Also tap this button when replacing ink.

H. **Network**

Displays the current status of the LAN as an icon.

It is grayed out during printing.

Tap to display **LAN settings** menu.

Note

- The values set in the menu on the operation panel are applied to all print jobs. However, if the same setting item exists in the printer driver, the setting value of the printer driver takes precedence.

Menu Operations

The operation panel has a touch screen (A) and several buttons (B).

Flick the touch screen and tap the displayed button or item with your finger to select a menu.

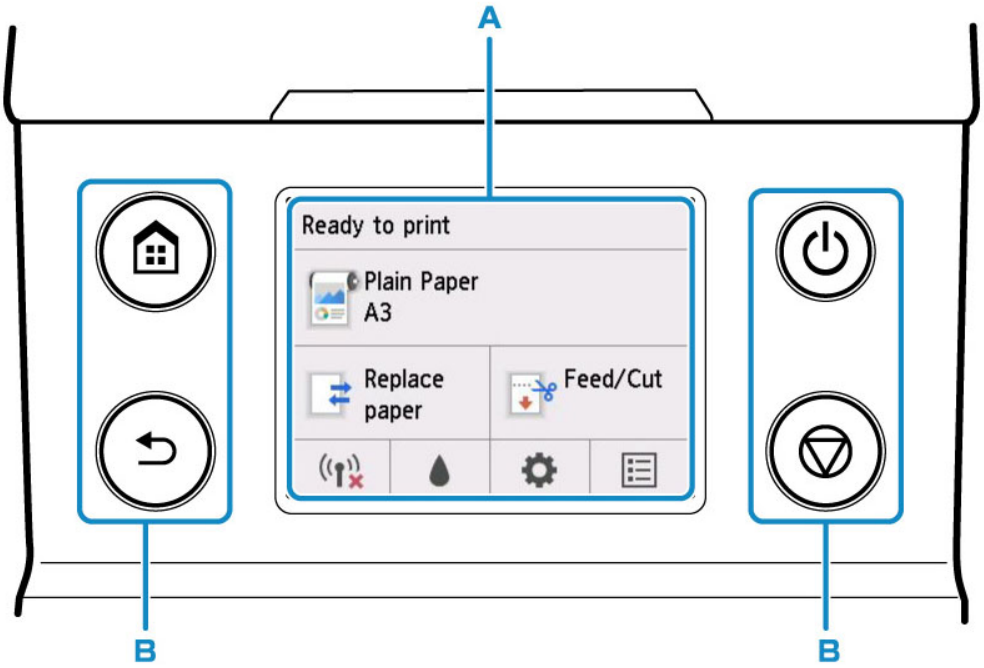

Example of Using Touch Screen

Example: Operation to change the setting of automatic power off time

1. On the HOME screen, tap (**Setup**).

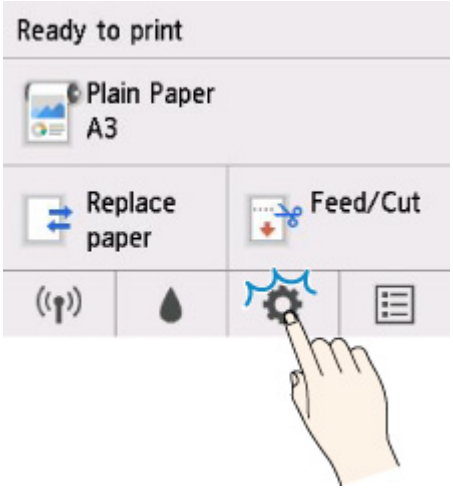

2. Tap **Device settings**.

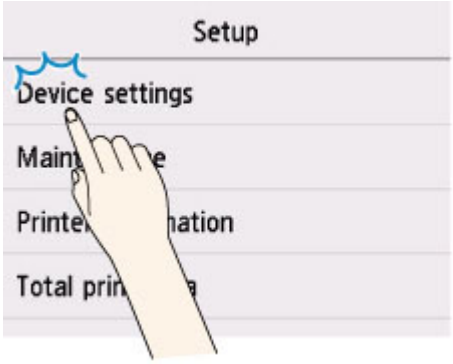

3. Flick up and down and tap **Other device settings**.

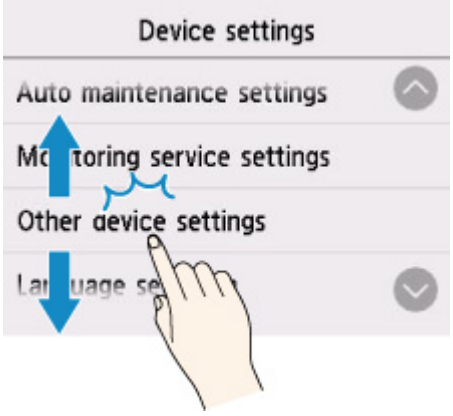

4. Tap **Energy saving settings**.

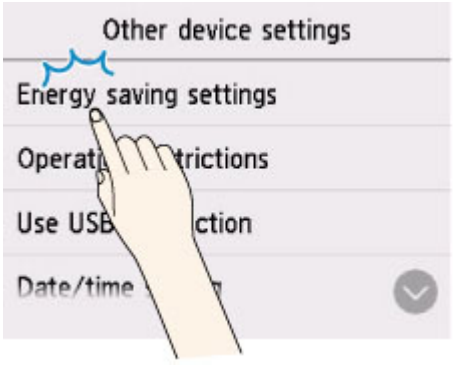

5. Tap **Auto power off**.

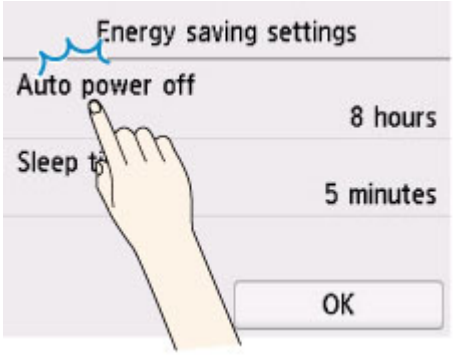

6. Tap the time you want to set.

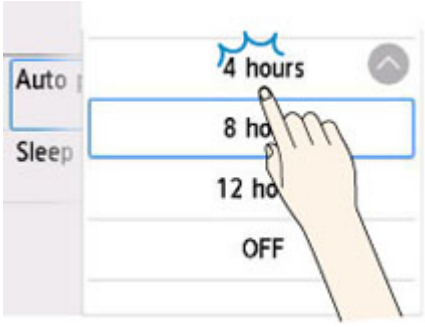

7. Tap **OK**.

When the setting is completed, press the **HOME** button to return to the HOME screen.

You can also go back to the screen one level higher by pressing the **Back** button and continue with other settings.

Menu Structure

The * on the right side of an item indicates the default value.

Values may vary depending on your model and firmware version.

- **Paper menu (when roll paper is loaded)**

  This menu is displayed by tapping paper information area.

Replace paper	
Feed/Cut	
Remove paper	
Paper settings	
	Width
	Type
	Advanced

- **Paper menu (when cut sheet is loaded)**

  This menu is displayed by tapping paper information area.

Replace paper	
Remove paper	
Paper settings	
	Page size
	Type
	Advanced

- **Replace paper**

- **Feed/Cut**

  This menu is displayed when roll paper is loaded.

- **LAN settings**

  This menu is displayed by tapping **Network** icon.

Wi-Fi	
	Connection
	Network name (SSID)
	Communication mode
	Channel
	Wi-Fi security
	IPv4 address
	IPv4 subnet mask

IPv4 default gateway
IPv4 DNS dynamic setting
IPv4 DNS host name
IPv4 DNS domain name
IPv6 link-local address
IPv6 link-local prefix length
IPv6 manual address
IPv6 manual prefix length
IPv6 stateless address 1
IPv6 stateless prefix length 1
IPv6 stateless address 2
IPv6 stateless prefix length 2
IPv6 stateless address 3
IPv6 stateless prefix length 3
IPv6 stateless address 4
IPv6 stateless prefix length 4
DHCPv6
DHCPv6 stateful address
DHCPv6 stateful prefix length
IPv6 default gateway 1
IPv6 default gateway 2
IPv6 default gateway 3
IPv6 default gateway 4
IPv6 primary DNS server address
IPv6 secondary DNS server add.
IPv6 DNS dyn. update: manual
IPv6 DNS dyn. update: stateless
IPv6 DNS dyn. update: stateful
IPv6 Use IPv4 host/domain name
IPv6 DNS host name
IPv6 DNS domain name
MAC address
IPsec settings
Printer name
Bonjour service name
Settings

		Enable/disable Wi-Fi		
			Enable / Disable	
		Wi-Fi setup		
			Easy wireless connect	
			Manual connect	
			WPS (Push button method)	
			Other connection types	
				Manual connect (adv.) / WPS (PIN code method)
		Advanced		
Wireless Direct				
	Connection			
	Network (SSID)/device name			
	Password			
	Communication mode			
	Channel			
	Wi-Fi security			
	IPv4 address			
	IPv4 subnet mask			
	IPv4 default gateway			
	IPv4 DNS dynamic setting			
	IPv4 DNS host name			
	IPv4 DNS domain name			
	IPv6 link-local address			
	IPv6 link-local prefix length			
	MAC address			
	IPsec settings			
	Printer name			
	Bonjour service name			
	Settings			
		Enable/disable Wireless Direct		
			Yes / No	
		Update SSID/password		
			Yes / No	
		Wireless Direct device name		
		Connection request confirmation		
			ON* / OFF	

		Advanced
Wired LAN		
	Connection	
	IPv4 address	
	IPv4 subnet mask	
	IPv4 default gateway	
	IPv4 DNS dynamic setting	
	IPv4 DNS host name	
	IPv4 DNS domain name	
	IPv6 link-local address	
	IPv6 link-local prefix length	
	IPv6 manual address	
	IPv6 manual prefix length	
	IPv6 stateless address 1	
	IPv6 stateless prefix length 1	
	IPv6 stateless address 2	
	IPv6 stateless prefix length 2	
	IPv6 stateless address 3	
	IPv6 stateless prefix length 3	
	IPv6 stateless address 4	
	IPv6 stateless prefix length 4	
	DHCPv6	
	DHCPv6 stateful address	
	DHCPv6 stateful prefix length	
	IPv6 default gateway 1	
	IPv6 default gateway 2	
	IPv6 default gateway 3	
	IPv6 default gateway 4	
	IPv6 primary DNS server address	
	IPv6 secondary DNS server add.	
	IPv6 DNS dyn. update: manual	
	IPv6 DNS dyn. update: stateless	
	IPv6 DNS dyn. update: stateful	
	IPv6 Use IPv4 host/domain name	
	IPv6 DNS host name	
	IPv6 DNS domain name	

	MAC address		
	IPsec settings		
	Printer name		
	Bonjour service name		
	Settings		
		Enable/disable Wired LAN	
			Enable / Disable
		Advanced	
Print details			

- **Ink information**

  This menu is displayed by tapping **Ink** icon.

Current estimated ink levels
Replace
Order ink now

- **Setup**

  This menu is displayed by tapping **Setup** icon.

Device settings			
	Test print		
		Print nozzle check pattern	
		Status print	
		Status print (administrator)	
		Print LAN details	
		Print setting print	
		Print advanced paper settings	
		Print job history	
		Print menu map	
		Print color list for palettes	
	Print settings		
		Print head movable width setting	
			Data width* / Maximum movable width / Paper width
		Prioritize paper size	
			Enable / Disable*
		JPEG print settings	
			Print quality settings
				Color mode

						Color (perceptual) / Color (saturation)* / Color (correct off) / Mono-chrome / Monochrome BMP
				Print quality		
						5 (Fast) / 4 / 3* / 2 / 1 (High)
				Input resolution		
						600 dpi / 300 dpi*
				Print target		
						Photo* / Line drawing
			Paper settings			
				Paper src		
						Auto select* / Roll paper / Manual
				Margin		
						3mm* / 5mm
				Border		
						Borderless / Bordered*
				Rotate		
						0 degrees* / 90 degrees
				Enlarge/Reduce		
						Fit paper size* / Same size / Scaling
		HP-GL/2 print settings				
			Print quality settings			
				Color mode		
						Color (perceptual) / Color (saturation)* / Color (correct off) / Mono-chrome / Monochrome BMP
				Print quality		
						5 (Fast) / 4 / 3* / 2 / 1 (High)
				Input resolution		
						600 dpi* / 300 dpi
				Print target		
						Photo / Line drawing*
			Paper settings			
				Paper src		
						Auto select* / Roll paper / Manual
				Margin		
						3mm* / 5mm
				Oversize		

					Enable* / Disable				
				Conserve paper					
					ON / OFF*				
				Rotate					
					0 degrees* / 90 degrees				
				Auto rotation					
					ON / OFF*				
				Enlarge/Reduce					
					Fit paper size / Same size* / Scaling				
				Print centered					
					ON / OFF*				
				Cut to standard size					
					ON / OFF*				
				Mirror					
					ON / OFF*				
			Line & pen manager						
				Merge					
					ON / OFF*				
				Pen setup					
					Select palette				
						Software*/Palette A/Palette B/Factory			
					Define palette				
						Palette A			
							Pen 0 to Pen 15 *Pen 0 to Pen 15 have the same menu structure. Here to Defaults		
								Width	
									0.04mm/0.08mm/0.13mm/0.18mm 0.25mm/0.35mm/0.50mm/0.65mm 0.70mm/0.80mm/0.90mm/1.0mm 1.4mm/2.0mm/3.0mm/5.0mm 8.0mm/12.0mm

									Color	
										0 to 255
									Line attributes	
										No setting/Circle setting
						Palette B				
							Menu structure same as **Palette A**			
						Factory				
							Pen 0 to **Pen 15** ***Pen 0** to **Pen 15** have the same menu structure. Here to Defaults			
									Width	
									Color	
									Line attributes	
					Reset palette					
						All palettes/Palette A/Palette B				
				Smooth						
					Software* / Smoothing					
				Thicken fine lines						
					ON / OFF*					
				Adjust faint lines						
					ON / OFF*					
				Width correction						
					Black/gray					
						-20 / -19 / ... / -1 / 0* / 1 / ... / 19 / 20				
					Color					
						-20 / -19 / ... / -1 / 0* / 1 / ... / 19 / 20				
				Print color list for palettes						
			Processing options							
				Warning display						
					Enable / Disable*					
				Detect image size						
					OFF* / Command priority					
		Direct print settings from FTP								
			Print settings 1							

				Print quality settings		
					Color mode	
						Color (perceptual) / Color (saturation)* / Color (correct off) / Monochrome / Monochrome BMP
					Print quality	
						5 (Fast) / 4 / 3* / 2 / 1 (High)
					Print target	
						Photo* / Line drawing
				Paper settings		
					Paper src	
						Auto select* / Roll paper / Manual
					Margin	
						3mm* / 5mm
					Border	
						Borderless / Bordered*
					Rotate	
						0 degrees* / 90 degrees
					Enlarge/Reduce	
						Fit paper size* / Same size / Scaling
			Print settings 2			
				Print quality settings		
					Color mode	
						Color (perceptual) / Color (saturation)* / Color (correct off) / Monochrome / Monochrome BMP
					Print quality	
						5 (Fast) / 4 / 3* / 2 / 1 (High)
					Print target	
						Photo* / Line drawing
				Paper settings		
					Paper src	
						Auto select* / Roll paper / Manual
					Margin	
						3mm* / 5mm
					Border	
						Borderless / Bordered*
					Rotate	

						0 degrees* / 90 degrees
					Enlarge/Reduce	
						Fit paper size* / Same size / Scaling
			Print settings 3			
				Print quality settings		
					Color mode	
						Color (perceptual) / Color (saturation)* / Color (correct off) / Monochrome / Monochrome BMP
					Print quality	
						5 (Fast) / 4 / 3* / 2 / 1 (High)
					Print target	
						Photo* / Line drawing
				Paper settings		
					Paper src	
						Auto select* / Roll paper / Manual
					Margin	
						3mm* / 5mm
					Border	
						Borderless / Bordered*
					Rotate	
						0 degrees* / 90 degrees
					Enlarge/Reduce	
						Fit paper size* / Same size / Scaling
			Print settings 4			
				Print quality settings		
					Color mode	
						Color (perceptual) / Color (saturation)* / Color (correct off) / Monochrome / Monochrome BMP
					Print quality	
						5 (Fast) / 4 / 3* / 2 / 1 (High)
					Print target	
						Photo* / Line drawing
				Paper settings		
					Paper src	
						Auto select* / Roll paper / Manual
					Margin	

						3mm* / 5mm
				Border		
						Borderless / Bordered*
				Rotate		
						0 degrees* / 90 degrees
				Enlarge/Reduce		
						Fit paper size* / Same size / Scaling
		Default print settings				
			Print quality settings			
				Color mode		
					Color (perceptual) / Color (saturation)* / Color (correct off) / Monochrome / Monochrome BMP	
				Print quality		
					5 (Fast) / 4 / 3* / 2 / 1 (High)	
				Print target		
					Photo* / Line drawing	
		Print setting print				
	LAN settings The lower items of this menu are the same as the lower items of LAN settings displayed by tapping **Network** icon.					
	Paper-related settings					
		Keep media type				
			Enable / Disable*			
		Manage remaining roll amount				
			Barcodes / Warning message only / Disable*			
		Roll amount warning setting				
			Roll amount 6 (earlier warning) / Roll amount 5 / Roll amount 4 / Roll amount 3 (standard)* / Roll amount 2 / Roll amount 1 (later warning)			
		Detect paper setting mismatch				
			Pause / Display warning* / Do not detect			
		Advanced paper settings				
		Paper size recognition settings				
			Roll paper setting 1			
			Roll paper setting 2			
			Roll paper setting 3			
			Roll paper setting 4			
			Roll paper setting 5			

				Roll paper setting 6
				Roll paper setting 7
		Auto feed at power on		
			Enable* / Disable	
		Print advanced paper settings		
		Reset paper settings for all paper		
	Auto maintenance settings			
		Auto nozzle check		
			Standard* / 1 page / 10 pages / Disable	
		Nozzle check error display		
			Enable / Disable*	
		System cleaning frequency		
			Standard* / Short	
		Print pattern after new head		
			ON* / OFF	
	Monitoring service settings			
		Enable/disable monitoring service		
			Enable / Disable*	
		Communication test		
		Communication log		
	Other device settings			
		Energy saving settings		
			Auto power off	
				5 minutes / 10 min. / 30 min. / 1 hour / 4 hours / 8 hours / 12 hours / OFF
			Sleep timer	
				5 minutes* / 10 min. / 15 min. / 20 min. / 30 min. / 40 min. / 50 min. / 60 min.
		Operation restrictions		
			Job history	
				Restrict / Do not restrict*
			Remote UI	
				Restrict / Do not restrict*
		Use USB connection		
			Use* / Do not use	
		Date/time setting		
			Date settings	
			Time setting	

		Date display format		
			YYYY/MM/DD / MM/DD/YYYY / DD/MM/YYYY	
		Time zone (GMT)		
			0 / +1 / ... / +12 / -12 / ... / -1	
		Sound control		
			Keypad sound	
				ON/ OFF*
			Alarm sound	
				ON* / OFF
		Length unit setting		
			Meters* / Feet/inches	
		EOP timer setting		
			1 minute / 2 minutes / 5 minutes / 10 minutes* / 30 minutes / 60 minutes	
		Job history sending setting		
			Send / Do not send*	
	Language selection			
	Firmware update			
		Install update		
		Check current version		
		Update notification setting		
			Yes* / No	
		DNS server setup		
			Auto setup* / Manual setup	
		Proxy server setup		
			Use / Do not use*	
	Administrator password setting			
		Remote UI or other tools / LCD, Remote UI, or other tools		
Maintenance				
	Print nozzle check pattern			
	Print head cleaning			
		Cleaning		
			All colors / Pattern 1 / Pattern 2	
		Deep cleaning		
			All colors / Pattern 1 / Pattern 2	
		System cleaning		
			All colors / Pattern 1 / Pattern 2	

	Print head alignment			
		Auto (standard)		
			Roll paper / Manual	
		Auto (fine)		
			Roll paper / Manual	
		Manual		
			Roll paper / Manual	
	Print head angle adjustment			
	Paper feed adjustment			
		Set priority		
			Roll paper	
				Auto* / Prioritize print quality / Prioritize length accuracy
			Manual	
				Auto* / Prioritize print quality / Prioritize length accuracy
		Adjust print quality		
			Auto / Manual	
		Adjust feed length		
			Print alignment pattern	
				Roll paper / Manual
			Change adjustment values	
				-0.70% / -0.68% / ... / 0.68% / 0.70%
	Maintenance cartridge info			
		Maintenance cartridge usage		
		Replace		
	Head replacement			
	Replace cutter blade unit			
	Platen cleaning			
	Prepare to move			
		Move on the same floor / Transport outdoors		
Printer information				
	System information			
		Current version		
		Printer name		
		Serial number		
		MAC address (Wi-Fi)		
		MAC address (wired LAN)		

		Root cert. thumbprint (SHA-1)
		Root cert. thumbprint (SHA-256)
	Error history	
		Hardware error
		Recoverable error
		Paper feed/transfer error
	Usage totals	
		Total print area
		Ink consumed
		Duty counter
	Head information	
		Serial number
		Installation date
		Dot count (million dots)
	Head alignment performance log	
	Values applied with auto settings	
		Paper Thickness (Head Height)
		Transport unit vacuum strength
Total print area		

- **Job management**

  This menu is displayed by tapping **Jobs** icon.

Print job		
	List of print jobs	
		Delete
Job history		
	Display job history	
	Print job history	
Pause printing		
	Enable / Disable*	
Delete all print jobs		

Advanced (Paper settings)

Tap the paper information area and tap **Paper settings** to display this menu.

Advanced			
	Roll length (change default)		
	Paper Thickness (Head Height)		
		-4 (Low) / -3 / -2 / 0 (Standard) / +1 / +2 / +3 (High)	
	Skew detection accuracy		
		Standard / Loose / OFF	
	Cutting mode		
		Automatic cut / Eject cut / User cut	
	Cut speed		
		Fast / Standard / Slow	
	Trim edge first		
		Auto / Off / On(Preset Length) / On(Input Length) / Manual	
	Cut-dust reduction		
		ON / OFF	
	Transport unit vacuum strength		
		Auto / Strong / Medium-strong / Standard / Medium-weak / Weak	
	Roll paper tension (printing)		
		High / Standard / Low	
	Roll paper tension (feeding)		
		High / Standard / Low	
	Pause between scans		
		Ink drying wait time	
			OFF / 0.5 seconds / 1 second / 3 seconds / 5 seconds / 7 seconds / 9 seconds
		Ink drying target area	
			Overall / Leading edge
	Pause between pages		
		OFF / 30 seconds / 1 minute / 3 minutes / 5 minutes / 10 minutes / 30 minutes / 60 minutes	
	Leading edge margin (roll)		
		3mm / 20mm	
	Leading edge margin (sheet)		
		3mm / 20mm	
	Extension for borderless printing		

		Paper with recommended width	
			Large / Standard / Small
		Paper with adequate width	
			6 (max) / 5 / 4 / 3 / 2 / 1 (min)
	Detect paper width		
		Enable / Disable	
	Reset paper settings by paper		

Advanced (LAN settings)

This menu is displayed by tapping **Network** icon > **Wi-Fi** / **Wireless Direct** / **Wired LAN** > **Settings** > **Advanced**.

The * on the right side of an item indicates the default value.

Advanced						
	Set printer name					
	TCP/IP settings					
		IPv4				
			IP address			
				Auto setup* / Manual setup		
			DNS server			
				DNS server setup		
					Auto setup* / Manual setup	
				Dynamic update setting		
					Enable / Disable*	
				Host name		
				Domain name		
			Proxy server			
				Use / Do not use*		
		IPv6				
			Enable/disable IPv6			
				Enable* / Disable		
			IPsec settings			
				Enable / Disable*		
			Use DHCPv6			
				Use* / Do not use		
			Manual address			
				Use / Do not use*		
			DNS server			
				DNS server setup		
					Auto setup* / Manual setup	
				Dynamic update setting		
					IPv6 DNS dyn. update: manual	
						Enable / Disable*
					IPv6 DNS dyn. update: stateless	

					Enable / Disable*
				IPv6 DNS dyn. update: stateful	
					Enable / Disable*
			IPv6 Use IPv4 host/domain name		
				Enable / Disable*	
			IPv6 DNS host name		
			IPv6 DNS domain name		
WSD setting					
	Enable/disable WSD				
		Enable / Disable*			
	Optimize inbound WSD				
		Enable* / Disable			
	Timeout setting				
		20 minutes / 15 minutes* / 10 minutes / 5 minutes / 1 minute			
Bonjour settings					
	Enable/disable Bonjour				
		Enable* / Disable			
	Service name				
IEEE802.1X settings					
	Authentication				
		Do not use* / TLS / TTLS / PEAP			
	EAP-TTLS internal auth. method				
		MSCHAPv2* / PAP			
	Weak encryption restriction				
		Restrict* / Do not restrict			
	Weak certificate restriction				
		Restrict* / Do not restrict			
	Advanced setup				
		User-ID			
		Username			
		Password			
		Authentication server name			
	Last authentication result				
SNTP settings					
	Client operation status				
		Enable / Disable*			

		NTP/SNTP server address
		Polling interval
	Spanning tree setting	
		Enable / Disable*
	LPR protocol setting	
		Enable* / Disable
	RAW protocol	
		ON* / OFF
	LLMNR	
		ON* / OFF
	Gigabit Ethernet settings	
		Autonegotiation* / 10 Mbps half duplex / 10 Mbps full duplex / 100 Mbps half duplex / 100 Mbps full duplex / 1 Gbps full duplex
	Use Dedicated Port	
		ON* / OFF
	Wi-Fi DRX setting	
		Enable* / Disable
	Wired LAN DRX setting	
		Enable* / Disable
	Reset SSL certificates	
	Reset LAN settings	

Changing Settings from Operation Panel

This section describes the procedure for changing the settings, taking the steps to specify **Print head movable width setting** as an example.

1. Make sure printer is turned on.

2. On the HOME screen, tap (**Setup**).

   Menu Operations

3. Tap setting item to adjust.

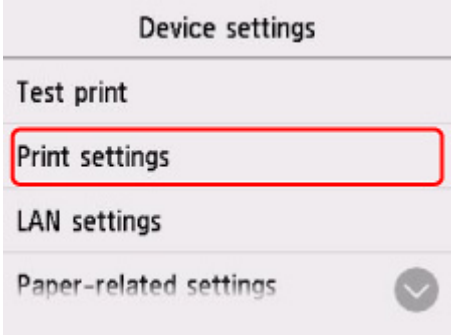

   The setting screen for the selected item appears.

4. Tap setting item.

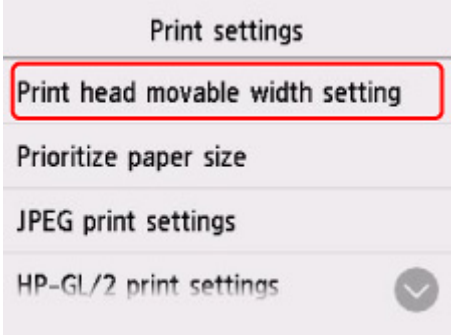

5. Tap setting to specify.

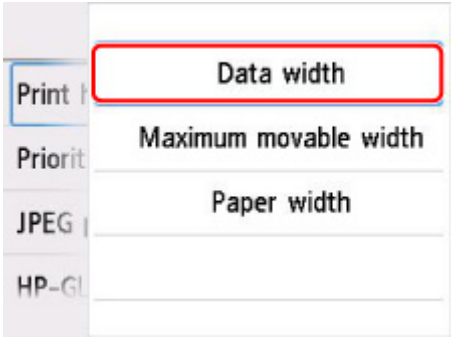

For more on setting items on the operation panel:

- Setting Items on Operation Panel

Setting Items on Operation Panel

Note

- The administrator password is required to change some setting items if it is enabled for changing settings using the operation panel.

  For more on setting items which the administrator password is required:

  - Setting Administrator Password on Operation Panel

Items for Security

- Administrator password setting

Items for Printer

- Other device settings
- Language selection
- Firmware update

Items for Paper/Printing

- Paper-related settings
- Print settings

Items for Maintenance/Management

- Job management
- Printer information
- Test print
- LAN settings
- Auto maintenance settings
- Monitoring service settings

Job management

This setting item is displayed by tapping (**Jobs**) on the HOME screen.

- **Print job**

  Displays the print job list. Tapping a job displays the details. On the detail screen, you can delete the job.

- **Job history**

  Important

  - The administrator password is required to display the job history if it is enabled for changing settings using the operation panel.

  - **Display job history**

    Displays the print job history. Tapping a print job displays the details.

  - **Print job history**

    Prints out the print job history.

- **Pause printing**

  Selecting **Enable** while a print job is in progress pauses the print job after the current job is completed.

- **Delete all print jobs**

  Deletes all jobs in the job queue.

Test print

This setting item is displayed by tapping **Device settings** after tapping (**Setup**) on the HOME screen.

- **Print nozzle check pattern**

  Prints out the nozzle check pattern.

  Checking for Nozzle Clogging

- **Status print**

  Prints out the printer status and setting value information.

  Note

  - **Status print (administrator)** is also displayed if the administrator password is enabled for changing settings using the operation panel.

  Status Print

- **Print LAN details**

  Prints out the network setting information.

  Printing Network Settings

- **Print setting print**

  Prints out the print settings list.

- **Print advanced paper settings**

  Prints out the setting values specified by **Advanced paper settings**.

- **Print job history**

  Prints out a record of print jobs, including the paper type and size, amount of ink consumed, and so on. Ink consumption indicates a rough estimate of the amount of ink consumed per print job.

  Job management

- **Print menu map**

  Prints out the menu list.

- **Print color list for palettes**

  Prints out color pallet information.

Print settings

This setting item is displayed by tapping **Device settings** after tapping (**Setup**) on the HOME screen.

- **Print head movable width setting**

  Adjusts the print head movable width.

- **Prioritize paper size**

  This is a setting item for roll paper.

  Select **Enable** to use the paper size setting as the basis for printing instead of other settings. The text or images in the margin are not printed.

  Select **Disable** to give priority to printing text or images.

  Note

  - The printed paper length is longer than the actual paper length. This is because the printed paper includes the upper/lower margins specified by **Roll Paper Safety Margin** and **Leading Edge Margin** in the printer driver and excludes the paper margins.

- **JPEG print settings**

  Performs JPEG print settings.

- **HP-GL/2 print settings**

  Performs HP-GL/2 print settings.

  HP-GL/2 Settings

- **Direct print settings from FTP**

  Performs print settings when printing directly from FTP. You can perform four settings individually.

- **Default print settings**

  Prints out the default values of print settings.

- **Print setting print**

  Prints out the print settings list.

HP-GL/2 Settings

- Menus on HP-GL/2 print settings
- Menu Setting Combinations
- Standard Size Table

LAN settings

This setting item is displayed by tapping **Device settings** after tapping (**Setup**) on the HOME screen.

Important

- The administrator password is required to change settings if it is enabled for changing settings using the operation panel.

Note

- You can also enter **LAN settings** by tapping (**Network**) on the HOME screen.

- **Wi-Fi**

  The following setting information on the Wi-Fi connection is displayed. (Some items are not displayed depending on printer settings.)

Items	Setting
Connection	**Enabled (connected)** / **Enabled (disconnected)** / **Disable**
Network name (SSID)	XXXXXXXXXXXXXXXX XXXXXXXXXXXXXXXX (up to 32 characters)
Communication mode	**Infrastructure**
Channel	1 - 13
Wi-Fi security	**Disable** / **WEP (64 bit)** / **WEP (128 bit)** / **WPA-PSK (TKIP)** / **WPA-PSK (AES)** / **WPA2-PSK (TKIP)** / **WPA2-PSK (AES)**
IPv4 address	XXX. XXX. XXX. XXX (12 characters)
IPv4 subnet mask	XXX. XXX. XXX. XXX (12 characters)
IPv4 default gateway	XXX. XXX. XXX. XXX (12 characters)
IPv4 DNS dynamic setting	**Enable** / **Disable**
IPv4 DNS host name	XXXXXXXXXXXX
IPv4 DNS domain name	XXXXXXXXXXXX
IPv6 link-local address	XXXX: XXXX: XXXX: XXXX: XXXX: XXXX: XXXX: XXXX (32 characters)
IPv6 link-local prefix length	XXX (up to 3 digits)
IPv6 manual address	XXXX: XXXX: XXXX: XXXX: XXXX: XXXX: XXXX: XXXX (32 characters)
IPv6 manual prefix length	XXX (up to 3 digits)
IPv6 stateless address 1	XXXX: XXXX: XXXX: XXXX: XXXX: XXXX: XXXX: XXXX (32 characters)

IPv6 stateless prefix length 1	XXX (up to 3 digits)
IPv6 stateless address 2	XXXX: XXXX: XXXX: XXXX: XXXX: XXXX: XXXX: XXXX (32 characters)
IPv6 stateless prefix length 2	XXX (up to 3 digits)
IPv6 stateless address 3	XXXX: XXXX: XXXX: XXXX: XXXX: XXXX: XXXX: XXXX (32 characters)
IPv6 stateless prefix length 3	XXX (up to 3 digits)
IPv6 stateless address 4	XXXX: XXXX: XXXX: XXXX: XXXX: XXXX: XXXX: XXXX (32 characters)
IPv6 stateless prefix length 4	XXX (up to 3 digits)
DHCPv6	**Enable** / **Disable**
DHCPv6 stateful address	XXXXXXXXXXXX
DHCPv6 stateful prefix length	XXX (up to 3 digits)
IPv6 default gateway 1	XXXX: XXXX: XXXX: XXXX: XXXX: XXXX: XXXX: XXXX (32 characters)
IPv6 default gateway 2	XXXX: XXXX: XXXX: XXXX: XXXX: XXXX: XXXX: XXXX (32 characters)
IPv6 default gateway 3	XXXX: XXXX: XXXX: XXXX: XXXX: XXXX: XXXX: XXXX (32 characters)
IPv6 default gateway 4	XXXX: XXXX: XXXX: XXXX: XXXX: XXXX: XXXX: XXXX (32 characters)
IPv6 primary DNS server address	XXXXXXXXXXXX
IPv6 secondary DNS server add.	XXXXXXXXXXXX
IPv6 DNS dyn. update: manual	**Enable** / **Disable**
IPv6 DNS dyn. update: stateless	**Enable** / **Disable**
IPv6 DNS dyn. update: stateful	**Enable** / **Disable**
IPv6 Use IPv4 host/domain name	**Enable** / **Disable**
IPv6 DNS host name	XXXXXXXXXXXX
IPv6 DNS domain name	XXXXXXXXXXXX
MAC address	XX:XX:XX:XX:XX:XX (12 characters)
IPsec settings	**Enable (ESP)** / **Enable (ESP & AH)** / **Enable (AH)** / **Disable**
Printer name	XXXXXXXXXXXXXXX (up to 15 characters)
Bonjour service name	XXXXXXXXXXXXX XXXXXXXXXXXXX XXXXXXXXXXXXX XXXXXXXXXXXXX (up to 52 characters)

("XX" represents alphanumeric characters.)

To change the setting, tap **Settings**.

- **Enable/disable Wi-Fi**

  Select **Enable** to wirelessly connect via wireless router.

- **Wi-Fi setup**

  Select how to setup Wi-Fi.

  - **Easy wireless connect**

    Select if you specify the settings of the access point information to the printer directly from a device (e.g. smartphone, or tablet) without operating the wireless router. Follow the on-screen instructions of the connecting device for the setup procedure.

  - **Manual connect**

    Select when you perform settings for Wi-Fi manually using the operation panel of the printer.

  - **WPS (Push button method)**

    Select when you perform settings for Wi-Fi using a wireless router supporting a Wi-Fi Protected Setup (WPS) push button method. Follow the on-screen instructions during setup.

  - **Other connection types**

    - **Manual connect (adv.)**

      Select when you perform settings for Wi-Fi manually. You can specify multiple WEP keys.

    - **WPS (PIN code method)**

      Select when you perform settings for Wi-Fi using a wireless router supporting a Wi-Fi Protected Setup (WPS) PIN code method. Follow the on-screen instructions during setup.

Note

- By tapping **Advanced**, you can set LAN in detail.

  For the items that can be set, see the following.

  Advanced

- **Wireless Direct**

The following setting information on the Wireless Direct connection is displayed. (Some items are not displayed depending on printer settings.)

Items	Setting
Connection	**Enabled (connected)** / **Enabled (disconnected)** / **Disable**
Network (SSID)/device name	DIRECT-XXXX-TM-300
Password	XXXXXXXXXX (10 characters)
Communication mode	**Wireless Direct**
Channel	3
Wi-Fi security	**WPA2-PSK (AES)**
IPv4 address	XXX. XXX. XXX. XXX (12 characters)
IPv4 subnet mask	XXX. XXX. XXX. XXX (12 characters)

IPv4 default gateway	XXX. XXX. XXX. XXX (12 characters)
IPv4 DNS dynamic setting	**Enable** / **Disable**
IPv4 DNS host name	XXXXXXXXXXXX
IPv4 DNS domain name	XXXXXXXXXXXX
IPv6 link-local address	XXXX: XXXX: XXXX: XXXX: XXXX: XXXX: XXXX: XXXX (32 characters)
IPv6 link-local prefix length	XXX (up to 3 digits)
MAC address	XX:XX:XX:XX:XX:XX (12 characters)
IPsec settings	**Disable**
Printer name	XXXXXXXXXXXXXXX (up to 15 characters)
Bonjour service name	XXXXXXXXXXXXX XXXXXXXXXXXXX XXXXXXXXXXXXX XXXXXXXXXXXXX (up to 52 characters)

("XX" represents alphanumeric characters.)

To change the setting, tap **Settings**.

- **Enable/disable Wireless Direct**

  Select **Enable** to wirelessly connect without wireless router.

- **Update SSID/password**

  Updates the identifier (SSID) and password.

- **Wireless Direct device name**

  Changes the name (device name) of the printer displayed on Wi-Fi Direct compatible device.

- **Connection request confirmation**

  Changes the display / non-display of the confirmation screen when Wi-Fi Direct compatible devices are connected to the printer.

Note

- By tapping **Advanced**, you can set LAN in detail.

  For the items that can be set, see the following.

  Advanced

- **Wired LAN**

The following setting information on the Wired LAN connection is displayed. (Some items are not displayed depending on printer settings.)

Items	Setting
Connection	**Enabled (connected)** / **Enabled (disconnected)** / **Disable**
IPv4 address	XXX. XXX. XXX. XXX (12 characters)
IPv4 subnet mask	XXX. XXX. XXX. XXX (12 characters)

IPv4 default gateway	XXX. XXX. XXX. XXX (12 characters)
IPv4 DNS dynamic setting	**Enable** / **Disable**
IPv4 DNS host name	XXXXXXXXXXXX
IPv4 DNS domain name	XXXXXXXXXXXX
IPv6 link-local address	XXXX: XXXX: XXXX: XXXX: XXXX: XXXX: XXXX: XXXX (32 characters)
IPv6 link-local prefix length	XXX (up to 3 digits)
IPv6 manual address	XXXX: XXXX: XXXX: XXXX: XXXX: XXXX: XXXX: XXXX (32 characters)
IPv6 manual prefix length	XXX (up to 3 digits)
IPv6 stateless address 1	XXXX: XXXX: XXXX: XXXX: XXXX: XXXX: XXXX: XXXX (32 characters)
IPv6 stateless prefix length 1	XXX (up to 3 digits)
IPv6 stateless address 2	XXXX: XXXX: XXXX: XXXX: XXXX: XXXX: XXXX: XXXX (32 characters)
IPv6 stateless prefix length 2	XXX (up to 3 digits)
IPv6 stateless address 3	XXXX: XXXX: XXXX: XXXX: XXXX: XXXX: XXXX: XXXX (32 characters)
IPv6 stateless prefix length 3	XXX (up to 3 digits)
IPv6 stateless address 4	XXXX: XXXX: XXXX: XXXX: XXXX: XXXX: XXXX: XXXX (32 characters)
IPv6 stateless prefix length 4	XXX (up to 3 digits)
DHCPv6	**Enable** / **Disable**
DHCPv6 stateful address	XXXXXXXXXXXX
DHCPv6 stateful prefix length	XXX (up to 3 digits)
IPv6 default gateway 1	XXXX: XXXX: XXXX: XXXX: XXXX: XXXX: XXXX: XXXX (32 characters)
IPv6 default gateway 2	XXXX: XXXX: XXXX: XXXX: XXXX: XXXX: XXXX: XXXX (32 characters)
IPv6 default gateway 3	XXXX: XXXX: XXXX: XXXX: XXXX: XXXX: XXXX: XXXX (32 characters)
IPv6 default gateway 4	XXXX: XXXX: XXXX: XXXX: XXXX: XXXX: XXXX: XXXX (32 characters)
IPv6 primary DNS server address	XXXXXXXXXXXX
IPv6 secondary DNS server add.	XXXXXXXXXXXX
IPv6 DNS dyn. update: manual	**Enable** / **Disable**
IPv6 DNS dyn. update: stateless	**Enable** / **Disable**
IPv6 DNS dyn. update: stateful	**Enable** / **Disable**
IPv6 Use IPv4 host/domain name	**Enable** / **Disable**

IPv6 DNS host name	XXXXXXXXXXXX
IPv6 DNS domain name	XXXXXXXXXXXX
MAC address	XX:XX:XX:XX:XX:XX (12 characters)
IPsec settings	**Enable (ESP)** / **Enable (ESP & AH)** / **Enable (AH)** / **Disable**
Printer name	XXXXXXXXXXXXXXX (up to 15 characters)
Bonjour service name	XXXXXXXXXXXXX XXXXXXXXXXXXX XXXXXXXXXXXXX XXXXXXXXXXXXX (up to 52 characters)

("XX" represents alphanumeric characters.)

To change the setting, tap **Settings**.

- **Enable/disable Wired LAN**

  Select **Enable** when connecting to wired LAN.

Note

- By tapping **Advanced**, you can set LAN in detail.

  For the items that can be set, see the following.

  Advanced

- **Print details**

Prints out the LAN setting information of the printer with Wi-Fi connection, wired LAN connection, wireless direct connection.

For the items that can be checked, see the following.

Printing Network Settings

Important

- Important information on your computer is stated on the paper on which the LAN setting information is printed. Please handle with care enough.

Note

- You can also print out the LAN setting information by tapping in the following order.

  (**Setup**) > **Device settings** > **Test print** > **Print LAN details**

- **Advanced**

By tapping **Advanced** on each setting screen of Wi-Fi connection, wired LAN connection, wireless direct connection, LAN information can be set in detail.

Important

- If the LAN is disabled, the following items can not be selected.

- **Set printer name**

  Specifies the printer name. You can use up to 15 characters for the name.

  Note

  - You cannot use the same printer name as that already used for other LAN connected devices.
  - You cannot use a hyphen for the initial or last character of the printer name.

- **TCP/IP settings**

  Performs IPv4 or IPv6 setting.

- **WSD setting**

  Setting items when you use WSD (one of the network protocols supported in Windows 10, Windows 8.1, and Windows 7).

  - **Enable/disable WSD**

    Selects whether WSD is enabled or disabled.

    Note

    - When this setting is enabled, the printer icon is displayed on the Network Explorer in Windows 10, Windows 8.1, and Windows 7.

  - **Optimize inbound WSD**

    Selecting **Enable** allows you to receive the WSD printing data faster.

  - **Timeout setting**

    Specifies the timeout length.

- **Bonjour settings**

  Setting items for LAN using Bonjour.

  - **Enable/disable Bonjour**

    Selecting **Enable** allows you to use Bonjour to perform the network settings.

  - **Service name**

    Specifies the Bonjour service name. You can use up to 48 characters for the name.

    Note

    - You cannot use the same service name as that already used for other LAN connected devices.

- **IEEE802.1X settings**

  Performs various settings for IEEE802.1X.

- **SNTP settings**

  Performs various settings for SNTP (Simple Network Time Protocol).

- **Spanning tree setting**

  Enables/Disables spanning tree. Selecting **Enable** avoids circulating data on a network.

- **LPR protocol setting**

  Enables/Disables the LPR setting.

- **RAW protocol**

  Enables/Disables RAW printing.

- **LLMNR**

  Specifies ON/OFF of LLMNR (Link-Local Multicast Name Resolution). Selecting **ON** allows the printer to detect printer's IP address from the printer name without a DNS server.

- **Gigabit Ethernet settings**

  Specifies the communication speed and communication method when using Gigabit Ethernet.

- **Use Dedicated Port**

  Selects whether to use a dedicated port for a command sent from a Canon application to the printer.

  Selecting **ON** allows you to use the dedicated port.

- **Wi-Fi DRX setting**

  Selecting **Enable** allows you to activate discontinuous reception when using Wi-Fi.

- **Wired LAN DRX setting**

  Selecting **Enable** allows you to activate discontinuous reception when the printer is connected to a device compatible with wired LAN.

- **Reset SSL certificates**

  Initializes SSL certificate information.

- **Reset LAN settings**

  Initializes the network settings on the printer.

  After resetting, perform setup again as necessary.

Other device settings

This setting item is displayed by tapping **Device settings** after tapping (**Setup**) on the HOME screen.

Important

- The administrator password is required to change settings if it is enabled for changing settings using the operation panel.

- **Energy saving settings**

  To save electricity, enable this setting to turn off the printer automatically or to enter sleep mode when specified length of time has elapsed.

  - **Auto power off**

    Sets the time until the printer turns off automatically. If no operations are performed on the printer for the specified duration of the time after entering Sleep mode, the printer automatically turns off.

  - **Sleep timer**

    Specifies the length of time to enter sleep mode automatically when no operation is made.

- **Operation restrictions**

  Restricts the following operations.

  - **Job history**

    Restricts to display the print job history.

  - **Remote UI**

    Restricts to use Remote UI.

- **Use USB connection**

  Enables / Disables USB connection.

- **Date/time setting**

  Sets the current date and time.

- **Date display format**

  Sets the format of dates displayed on the touch screen and printed on photos.

- **Time zone (GMT)**

  Specifies the time zone according to a country or region you live in.

  Specifying the time zone allows you to display the correct time and date an e-mail was sent on your mail software.

  Select the time difference from GMT (Greenwich mean time) according to a country or region you live in.

- **Sound control**

  Select whether to sound / not sound for key touch sound and alarm sound.

- **Length unit setting**

  Selects the length unit (meter or feet/inch).

- **EOP timer setting**

  Specify the timeout period before cancellation of print jobs that cannot be received by the printer.

- **Job history sending setting**

  The printer sends a job history when **Send** is selected.

Language selection

This setting item is displayed by tapping **Device settings** after tapping (**Setup**) on the HOME screen.

Important

- The administrator password is required to change settings if it is enabled for changing settings using the operation panel.

Changes the language for the messages and menus on the touch screen.

Paper-related settings

This setting item is displayed by tapping **Device settings** after tapping (**Setup**) on the HOME screen.

- **Keep media type**

  Select **Enable** to keep using the same type of paper.

- **Manage remaining roll amount**

  Selects the method to manage remaining roll amount and that to display warning when the roll is running short.

  - **Barcodes**

    Manages remaining roll amount by using a barcode.

    By using the barcode every time you replace a roll, you can manage remaining roll amount properly. Specify the roll length properly when you load a new roll.

  - **Warning message only**

    Estimates remaining roll amount by using media type and roll diameter information. A warning appears when remaining roll amount comes closer to the specified value.

    Depending on the environment you are using the printer, selecting this setting may not manage remaining roll amount as precisely as you expected. We recommend you select a higher value for this setting item.

  - **Disable**

    Select to disable managing remaining roll amount.

- **Roll amount warning setting**

  Specifies when to warn the remaining roll paper amount.

- **Detect paper setting mismatch**

  Selects printer action when you start printing with the paper size, the media type, and print settings different from those registered.

- **Advanced paper settings**

  Specifies advanced paper settings for each paper type.

  Important

  - You can select **Extension for borderless printing** as a setting item for some paper types.

    If you select **Small** for **Paper with adequate width** on this setting item, a slight border remains on the paper. In addition, the paper may be smudged with extra ink.

- **Paper size recognition settings**

  Selects which size is preferred when paper size detection is enabled.

  - **Roll paper setting 1**

Select whether B4 or 10 inch is applied when a roll of an intermediate size is detected.

- **Roll paper setting 2**

  Select whether A3 or 300 mm is applied when a roll of an intermediate size is detected.

- **Roll paper setting 3**

  Select whether 300 mm or 12 inch is applied when a roll of an intermediate size is detected.

- **Roll paper setting 4**

  Select whether 500 mm or 20 inch is applied when a roll of an intermediate size is detected.

- **Roll paper setting 5**

  Select whether B2 or 20 inch is applied when a roll of an intermediate size is detected.

- **Roll paper setting 6**

  Select whether A1 or 600 mm is applied when a roll of an intermediate size is detected.

- **Roll paper setting 7**

  Select whether 600 mm or 24 inch is applied when a sheet of an intermediate size is detected.

- **Auto feed at power on**

  When **Enable** is selected, the printer judges the existence of paper exchange when starting up, and if paper has been exchanged, paper feeding operation is performed.

  It may take time to judge paper exchange.

  When **Disable** is selected, the printer does not judge whether or not to change the paper when starting up, and waits with the current paper feed setting.

- **Print advanced paper settings**

  Tapping **Yes** prints out each setting specified in **Advanced paper settings**.

- **Reset paper settings for all paper**

  Tapping **Yes** initializes each setting specified in **Advanced paper settings**.

  Entering the administrator password is required if it is enabled.

Important

- When you set the paper settings back to the factory default, added or updated paper information using Media Configuration Tool is erased.

Auto maintenance settings

This setting item is displayed by tapping **Device settings** after tapping (**Setup**) on the HOME screen.

Important

- The administrator password is required to change settings if it is enabled for changing settings using the operation panel.

- **Auto nozzle check**

  Enables/Disables automatic nozzle checking. You can also select the page interval to perform automatic nozzle checking.

- **Nozzle check error display**

  Enables/Disables displaying the nozzle check error.

- **System cleaning frequency**

  Specifies the frequency of automatic system cleaning.

  ### Note

  - To maintain print quality, we recommend you select **Short** if you use the printer at a higher place.

- **Print pattern after new head**

  Selects whether you print an adjustment pattern after replacing the print head.

Administrator password setting

This setting item is displayed by tapping **Device settings** after tapping (**Setup**) on the HOME screen.

Important

- The administrator password is required to change settings if it is enabled for changing settings using the operation panel.

You can specify or disable the administrator password.

If you specify the administrator password, select the range and specify the administrator password.

Remote UI or other tools

Entering the administrator password is required to change the setting items using Remote UI or some software.

LCD, Remote UI, or other tools

Entering the administrator password is required to change the setting items using the operation panel of the printer, Remote UI, or some software.

For details:

Setting Administrator Password on Operation Panel

Setting Administrator Password on Operation Panel

You can specify or disable the administrator password.

Specifying the administrator password requires you to enter the password to use the items or change the settings below.

- **LAN settings**
- **Other device settings**
- **Language selection**
- **Auto maintenance settings**
- **Administrator password setting**
- **Status print (administrator)**
- **Monitoring service settings**
- **Firmware update**

Follow the procedure below to specify the administrator password.

1. Make sure printer is turned on.

2. On the HOME screen, tap (**Setup**).

   Menu Operations

3. Tap **Device settings**.

4. Tap **Administrator password setting**.

5. Enter the password on the administrator password input screen and tap **OK**.

   Important

   - The administrator password is set at the time of purchase. The printer's serial number is used as the password.

     For the administrator password, refer to Administrator Password.

   If an administrator password is not specified, the confirmation message appears. Confirm the message and tap **Yes**.

6. Tap **Change administrator password**.

   If an administrator password is not specified, the confirmation message appears. Confirm the message and tap **OK**.

7. Tap range where administrator password is valid.

Remote UI or other tools

Entering the administrator password is required to change the setting items using Remote UI or some software.

LCD, Remote UI, or other tools

Entering the administrator password is required to change the setting items using the operation panel of the printer, Remote UI, or some software.

8. Enter administrator password.

Important

- The following character restrictions apply to the password:
  - Set the password by using 4 to 32 characters.
  - The allowed characters are single-byte alphanumeric characters.
  - For security reasons, we recommend you use 6 and more alphanumeric characters.

9. Tap **Apply**.

10. Enter administrator password you specified again.

11. Tap **OK**.

The administrator password is enabled.

When You Want to Disable the Administrator Password:

After operating steps 1 to 5 of the password specifying procedure, tap **Remove administrator password**. After that, please follow the instructions displayed on the touch screen.

Monitoring service settings

This setting item is displayed by tapping **Device settings** after tapping (**Setup**) on the HOME screen.

Important

- The administrator password is required to change settings if it is enabled for changing settings using the operation panel.

- **Enable/disable monitoring service**

  Selecting **Enable** allows the printer to send error details to the service center.

- **Communication test**

  Performs a communication test with the service center.

- **Communication log**

  Displays the list of error numbers (up to 30), error code, and time the error occurs. Tapping an item displays the error details.

Printer information

This setting item is displayed by tapping (**Setup**) on the HOME screen.

- **System information**

  Displays printer's system information.

- **Error history**

  Displays the error history.

  - **Hardware error**

    Displays the hardware error codes (up to 5).

  - **Recoverable error**

    Displays the recoverable error (e.g. paper or ink related error) codes (up to 5).

  - **Paper feed/transfer error**

    Displays the error codes for errors which occur during paper feed/transfer (up to 5).

    Tapping an error code displays the error details.

  For more on the error code, refer to List of Support Code for Error.

- **Usage totals**

  Displays the printer's record of use such as total print area or the amount of ink consumption.

- **Head information**

  Displays the print head serial number, elapsed days since the current print head was installed, and dot count.

- **Head alignment performance log**

  Displays the print head alignment performance log (up to 5).

- **Values applied with auto settings**

  Displays the print settings applied the last print job.

HP-GL/2 Settings

- Menus on HP-GL/2 print settings
- Menu Setting Combinations
- Standard Size Table

Menus on HP-GL/2 print settings

- Color mode
- Print quality
- Input resolution
- Print target
- Paper src
- Margin
- Oversize
- Conserve paper
- Rotate
- Auto rotation
- Enlarge/Reduce
- Print centered
- Cut to standard size
- Mirror
- Merge
- Smooth
- Thicken fine lines
- Adjust faint lines
- Width correction
- Print color list for palettes
- Warning display
- Detect image size
- Select palette
- Define palette
- Pen 0 to Pen 15
- Reset palette

Color mode

Lets you specify the color(s) to use when printing HP-GL/2 data.

This setting item is displayed by tapping in the following order.

(**Setup**) > **Device settings** > **Print settings** > **HP-GL/2 print settings** > **Print quality settings**

- **Color (perceptual)**
  - If you select **Line drawing** for **Print target**:

    Reproduces colors of general images naturally and features smooth gradation. In addition, selecting this setting allows you to adjust colors easily using an application software.
  - If you select **Photo** for **Print target**:

    Reproduces colors of general photos naturally and features smooth gradation. In addition, selecting this setting allows you to adjust colors easily using an application software.
- **Color (saturation) (Initial setting)**
  - If you select **Line drawing** for **Print target**:

    Prints in easy-to-see colors suitable for line drawing.
  - If you select **Photo** for **Print target**:

    Reproduces vivid colors on data such as a poster.
- **Color (correct off)**

  Performs printing without color matching.
- **Monochrome**
  - If you select **Line drawing** for **Print target**:

    Select this setting to print a line drawing using black ink.
  - If you select **Photo** for **Print target**:

    Prints color data converting to monochrome. Continuous tones are reproduced using gray halftones.
- **Monochrome BMP**

  The colors other than white are printed in black.

Print quality

Lets you specify print quality.

This setting item is displayed by tapping in the following order.

(**Setup**) > **Device settings** > **Print settings** > **HP-GL/2 print settings** > **Print quality settings**

- **5 (Fast)**

  Select this setting for faster printing.

- **4**

  Printing speed is faster than that in selecting **3**.

- **3 (Initial setting)**

  Select this setting for standard printing that balances print quality and printing speed.

- **2**

  Printing quality is higher than that in selecting **3**.

- **1 (High)**

  Select this setting to give print quality priority.

  This causes printing to take longer than other settings, but print quality is higher.

Input resolution

Specifies the resolution for internal rendering process.

This setting item is displayed by tapping in the following order.

(**Setup**) > **Device settings** > **Print settings** > **HP-GL/2 print settings** > **Print quality settings**

- **600 dpi (Initial setting)**

  Specifies 600 dpi for internal rendering resolution.

  This setting raises the accuracy of internal processes for finer printing.

- **300 dpi**

  Specifies 300 dpi for internal rendering resolution.

  This setting increases the speed of internal processes for faster printing.

Print target

Specifies the print target of HP-GL/2 data.

This setting item is displayed by tapping in the following order.

(**Setup**) > **Device settings** > **Print settings** > **HP-GL/2 print settings** > **Print quality settings**

- **Photo**

  Select this setting to print a data which includes illustration or photo.

- **Line drawing (Initial setting)**

  Select this setting to print a drawing data which includes lines.

Paper src

Specifies the paper type (sheet or roll) for HP-GL/2 data printing.

This setting item is displayed by tapping in the following order.

(**Setup**) > **Device settings** > **Print settings** > **HP-GL/2 print settings** > **Paper settings**

- **Auto select (Initial setting)**

  Select an appropriate paper source automatically.

- **Roll paper**

  Select this setting to print on the roll paper.

- **Manual**

  Select this setting to print on the sheets.

Margin

Specifies the margins for HP-GL/2 data printing.

This setting item is displayed by tapping in the following order.

(**Setup**) > **Device settings** > **Print settings** > **HP-GL/2 print settings** > **Paper settings**

Note

- If the **Leading edge margin (roll)** and/or **Leading edge margin (sheet)** settings on **Advanced paper settings** are different from the settings here, the larger of the settings is given priority.

- **3mm (Initial setting)**

  Specifies 3 mm margin.

  However, the trailing edge margin for cut sheet paper is 20 mm.

- **5mm**

  Specifies 5 mm margin.

  However, the trailing edge margin for cut sheet paper is 20 mm.

Oversize

Specifies whether margins are within or outside the HP-GL/2 data image drawing range.

This setting item is displayed by tapping in the following order.

(**Setup**) > **Device settings** > **Print settings** > **HP-GL/2 print settings** > **Paper settings**

- **Enable (Initial setting)**

  Specifies margins outside the HP-GL/2 data image drawing range.

  Adding margins outside the image drawing range will not cause part of the image to be cut off.

  However, you will need to print on paper of a size that is greater than the size of the image drawing range specified by the HP-GL/2 data plus the top, bottom, left, and right margins.

- **Disable**

  Specifies margins inside the HP-GL/2 data image drawing range.

  Depending on the layout, adding margins inside the image drawing range may cause part of the image to be cut off.

Note

- Some CAD applications can cause the origin to be out of position and part of the image to be cut off. Experiment with the **Disable** and **Enable** settings of this function to find the one that works best.

OVERSIZE SETTING EXAMPLES

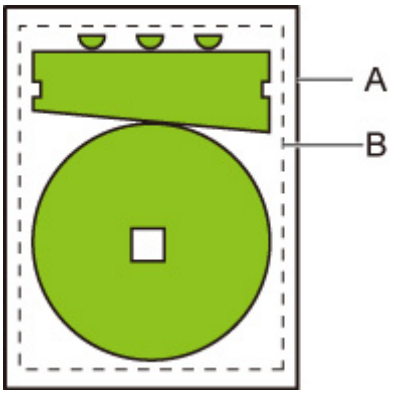

A. Printed page size
B. Image drawing range

When you print an image above, using **Oversize** allows you to select where to apply margins (outside/inside the image) based on the image drawing range.

Select **Enable** to apply margins outside the image, or select **Disable** to apply those inside.

- When **Disable** is selected:

  Printing is performed based on the image drawing range. The origin is specified on the upper left of the paper.

Margins are added to the inside of the image drawing range.

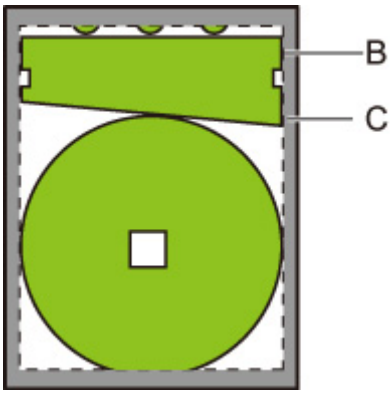

B. Image drawing range

C. Margins

If the actual drawing image is smaller than the specified image drawing range, the image is not cut off by the margins.

- When **Enable** is selected:

  Printing is performed based on the image drawing range. The origin is specified on the upper left of the paper.

  Margins are added to the outside of the image drawing range.

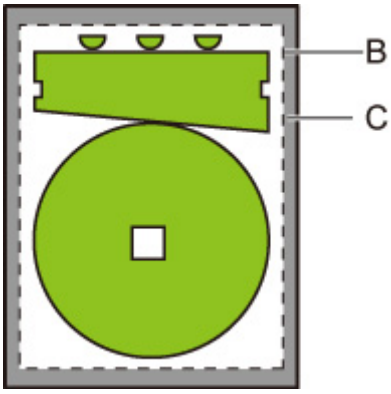

B. Image drawing range

C. Margins

When you specify the paper size for printing, select the size which covers both the image drawing range and margins.

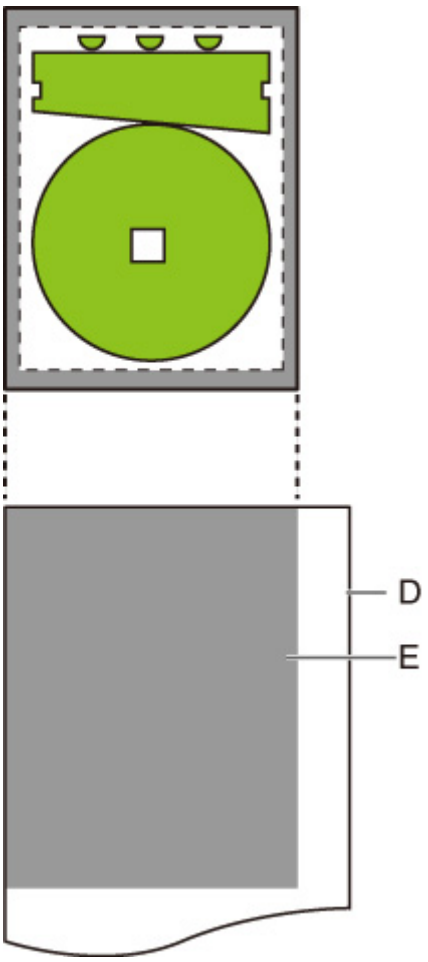

D. Paper for printing

E. Image drawing range with margins

If you select the paper size which cannot cover the margins, the image may be cut off.

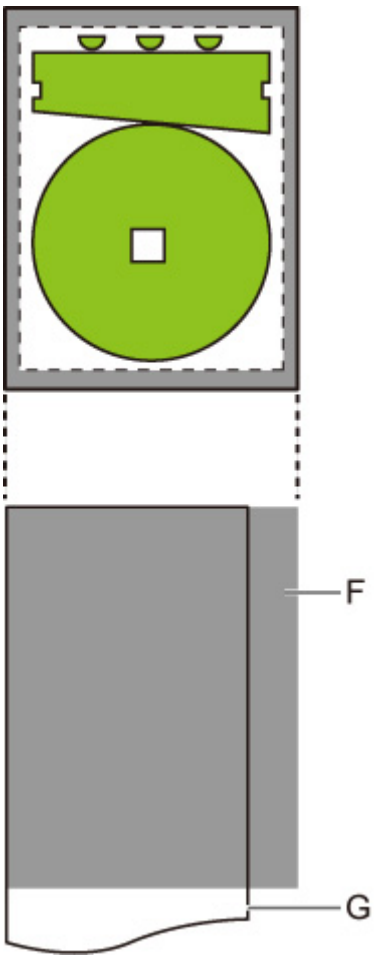

F. Range which cannot be printed

G. Paper for printing

Conserve paper

When printing on roll paper, eliminates blank space (margins) above and/or below the image (if there is any) to conserve paper.

This setting item is displayed by tapping in the following order.

(**Setup**) > **Device settings** > **Print settings** > **HP-GL/2 print settings** > **Paper settings**

- **ON**

  Blank space above and below the image is eliminated when printing.

- **OFF (Initial setting)**

  Paper is not conserved.

CONSERVE PAPER SETTING EXAMPLES

Print data (image drawing range)

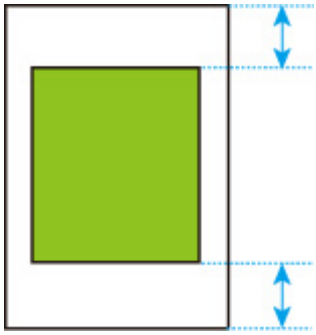

- When **OFF** is selected:

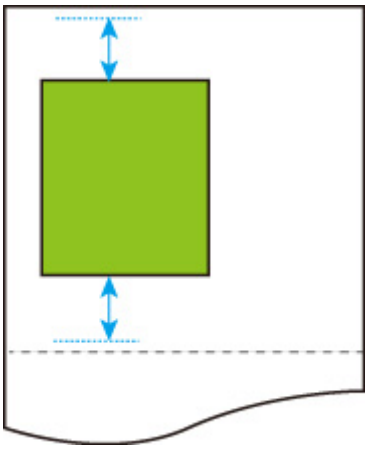

- When **ON** is selected:

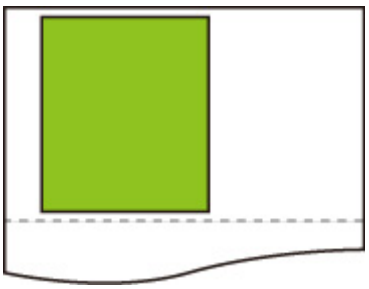

Rotate

Rotates the image according to the specified setting.

This setting item is displayed by tapping in the following order.

(**Setup**) > **Device settings** > **Print settings** > **HP-GL/2 print settings** > **Paper settings**

- **0 degrees (Initial setting)**

  Image is not rotated.

- **90 degrees**

  Specified image is rotated by 90 degrees.

  If the part of rotated image is out of the paper width, the part is not printed.

  Note

  - When the print data includes HP RTL, the HP RTL image part is not rotated.

Note

- If **ON** is selected for **Auto rotation**, priority is given to the **Auto rotation** setting.

Auto rotation

Printing on paper while **Auto rotation** is set to **ON** causes the image to be rotated automatically in accordance with the most efficient image layout in order to conserve paper and avoid images running off the edges of the paper.

This setting item is displayed by tapping in the following order.

(**Setup**) > **Device settings** > **Print settings** > **HP-GL/2 print settings** > **Paper settings**

- **ON**

  Image is rotated by 90 degrees in the cases described below.

  - When the output page is in portrait orientation and the long side is shorter than the roll paper width
  - When the output page is in landscape orientation, and the long side is longer than the paper width and the short side is shorter than the paper width

    Even if the long edge and short edge of the output page are both longer than the paper width, and the output page is in landscape orientation, the image is rotated to expand the print range.

    Note

    - The length that the roll paper will be cut to depends on rotation.
    - The desired printing results may not be obtained when HP-GL/2 data that does not include image drawing range information is received.

      In this case, select **Command priority** for **Detect image size**.
    - When the print data includes HP RTL, the HP RTL image part is not rotated.

- **OFF (Initial setting)**

  Images are not rotated automatically.

AUTO ROTATE EXAMPLES

- Efficient layout

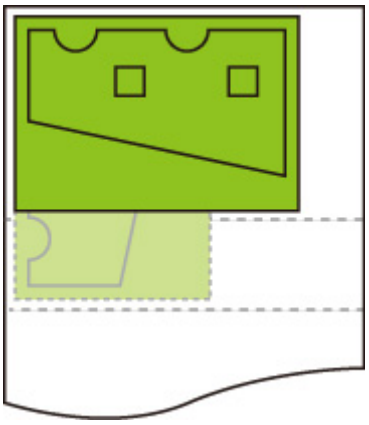

- Prevents image from running off edge.

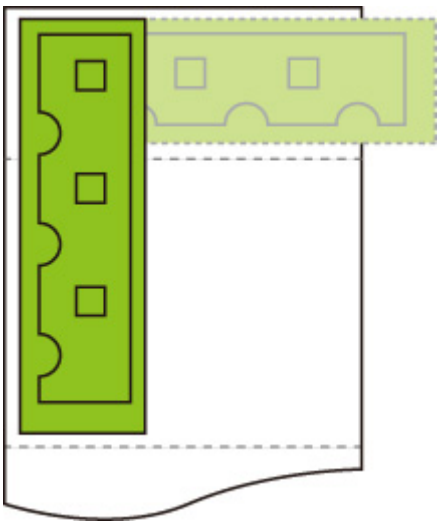

- Even if the image runs off the edge of the paper, it is rotated to expand the print range.

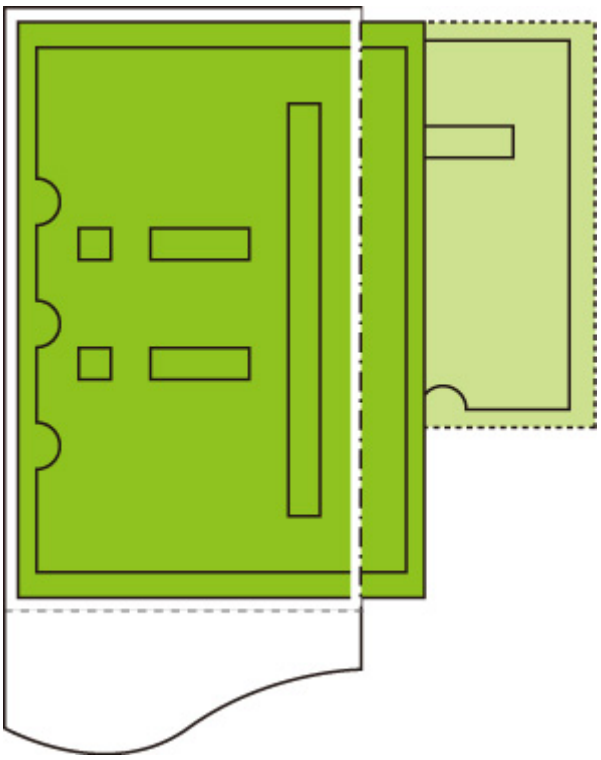

Enlarge/Reduce

Enlarges or reduces images

This setting item is displayed by tapping in the following order.

(**Setup**) > **Device settings** > **Print settings** > **HP-GL/2 print settings** > **Paper settings**

- **Fit paper size**

  Enlarges or reduces the image for printing to fit to the paper loaded in the printer.

  Note

  - Data line widths are not enlarged or reduced.
  - Margin widths are not enlarged or reduced. Because of this, paper size scaling and post-processing image scaling may not be the same.
  - The maximum enlarge/reduce rate for this setting is calculated by (maximum width/1 inch x 100 %). Therefore, the maximum rate is 2400 % for 24 inch model, 3600 % for 36 inch model, and 4400 % for 44 inch model. If the calculation result exceeds the maximum rate, the image is enlarged according to the maximum rate for each model.

- **Same size (Initial setting)**

  Image is not enlarged/reduced.

- **Scaling**

  Enlarges or reduces the image to the specified scaling value for printing.

  Scaling can be specified within a range of 25 % to 400 %.

  Note

  - Data line or margin widths are not enlarged or reduced.

ENLARGE/REDUCE Scaling SETTING EXAMPLE

The output object area is enlarged or reduced as specified by the **Scaling** setting. The origin is in the upper-left corner.

For example, doubling the length and width of A4 size paper results in A2 size paper.

If there are margins of 3 mm, the A4 size output object area measures 291 mm x 204 mm.

Specify a value of 200% for the **Scaling** setting to produce a post-processing size of 582 mm x 408 mm.

(Note that ambient conditions may cause paper to expand and contract.)

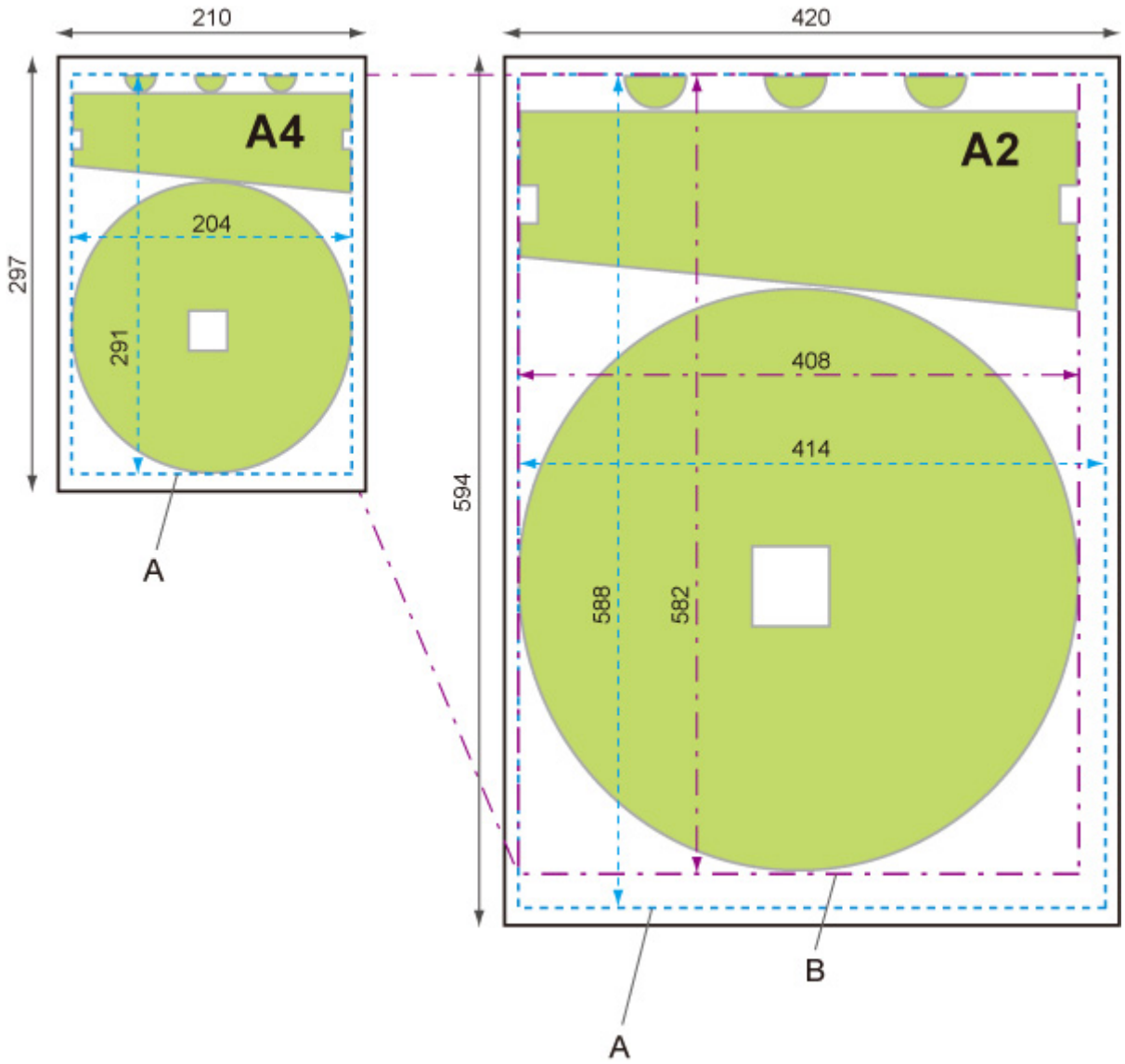

A. Output object area
B. 200% post-processing size

ENLARGE/REDUCE Fit paper size SETTING EXAMPLE

Fit paper size expands or reduces the long side of the print data's output object area so it matches the long side of the output page size output object area. The origin is in the upper-left corner.

Margin widths are not enlarged or reduced. Because of this, paper size scaling and post-processing image scaling may not be the same.

For example, doubling the length and width of A4 size paper results in A2 size paper.

If there are margins of 3 mm, the A4 size output object area measures 291 mm x 204 mm.

Specifying **Fit paper size** will result in a post-processing size of approximately 588 mm x 412 mm.

(Note that ambient conditions may cause paper to expand and contract.)

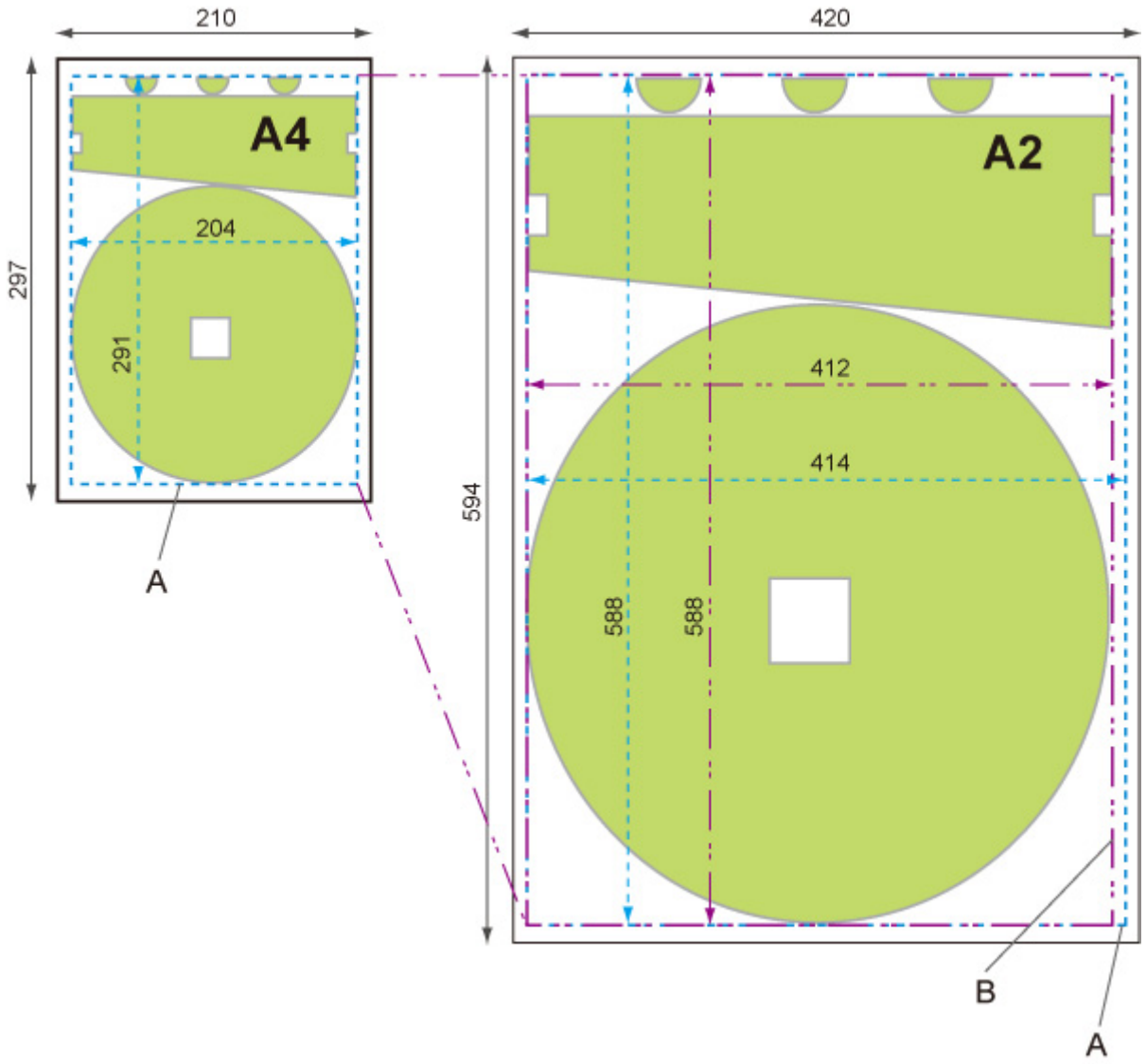

A. Output object area
B. Fit to long side post-processing size

Print centered

Prints the output object area in the center of the paper.

This setting item is displayed by tapping in the following order.

(**Setup**) > **Device settings** > **Print settings** > **HP-GL/2 print settings** > **Paper settings**

- **ON**
  - For cut sheet paper

    Prints the output object area in the center of the paper.
  - For roll paper

    Prints the output object area in the horizontal center of the paper.

    Note

    - The output object area is not printed in the center when the paper size is smaller than the output page size.
- **OFF (Initial setting)**

  The output object area is not printed in the center of the paper.

PRINT CENTERED EXAMPLES

- **OFF** is selected when printing on sheet

- **ON** is selected when printing on sheet

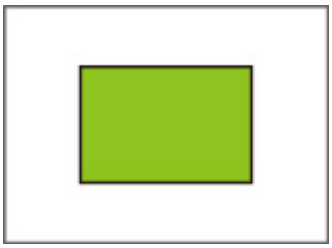

- **OFF** is selected when printing on roll

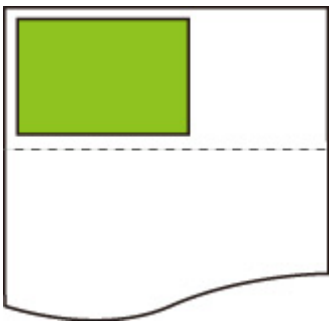

- **ON** is selected when printing on roll

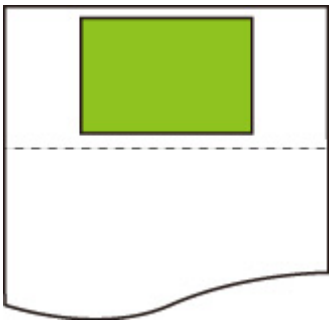

Cut to standard size

Specifies standard size as the output page size when printing on roll paper.

This setting item is displayed by tapping in the following order.

(**Setup**) > **Device settings** > **Print settings** > **HP-GL/2 print settings** > **Paper settings**

- **ON**

  Cuts to standard size in accordance with the roll paper width.

  When there are two lengths/widths applicable for a given roll paper width, the optimum size is selected automatically.

  Note

  - If **ON** is selected for **Conserve paper** and there is blank space above/below the image, the size will not be standard size.
  - When **ON** is selected for **Print centered**, printing will be in the center of the standard size.
  - If there is no standard size corresponding to the roll paper width, operation is the same as if **OFF** is selected. No message is displayed.
  - For information about supported standard sizes, see Standard Size Table.

- **OFF (Initial setting)**

  Cutting according to standard size is not performed.

STANDARD CUT EXAMPLES

- A3-size width roll paper

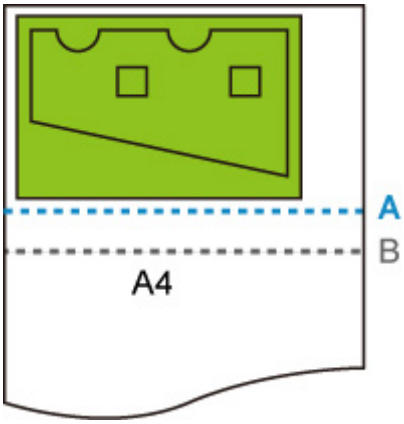

A. Position of cut when **OFF**
B. Position of cut when **ON**

- A3-size width roll paper

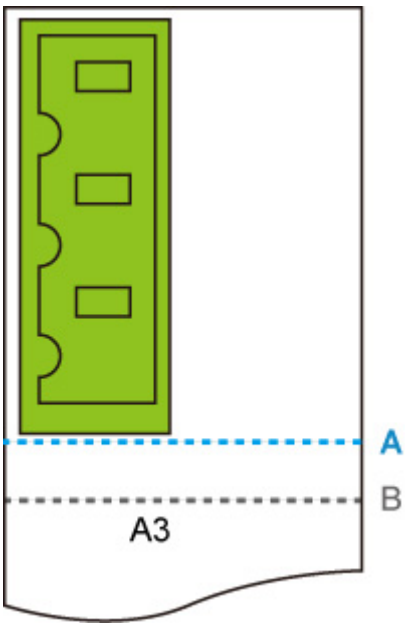

A. Position of cut when **OFF**
B. Position of cut when **ON**

Mirror

Flip the image horizontally and print.

This setting item is displayed by tapping in the following order.

(**Setup**) > **Device settings** > **Print settings** > **HP-GL/2 print settings** > **Paper settings**

- **ON**

  Flip the image horizontally and print.

  Depending on the paper to be printed, the position where the horizontally flipped image is printed varies.

- **OFF (Initial setting)**

  Horizontal flip of the image is not performed.

HORIZONTAL FLIP (MIRROR) EXAMPLE

- When **OFF** is selected when printing on roll paper:

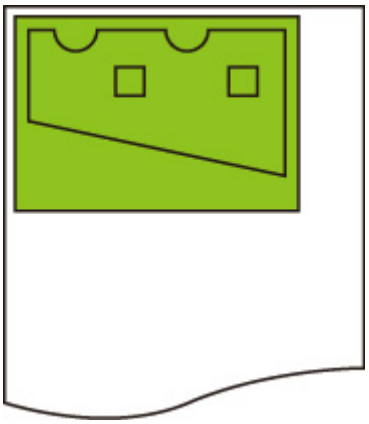

- When **ON** is selected when printing on roll paper:

  Do not move the position to print the image on the paper, flip the image horizontally.

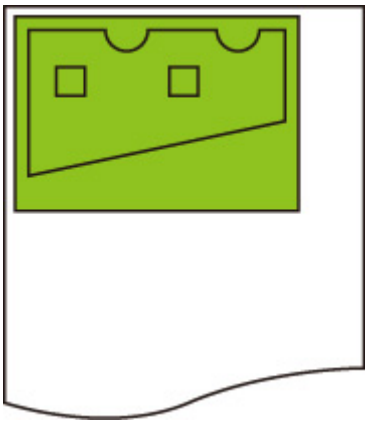

- When **OFF** is selected when printing on cut paper or roll paper cut to standard size:

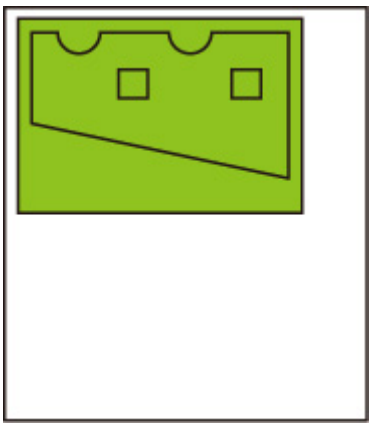

- When **ON** is selected when printing on cut paper or roll paper cut to standard size:

  Flip the image horizontally for each position where you print the image on the paper.

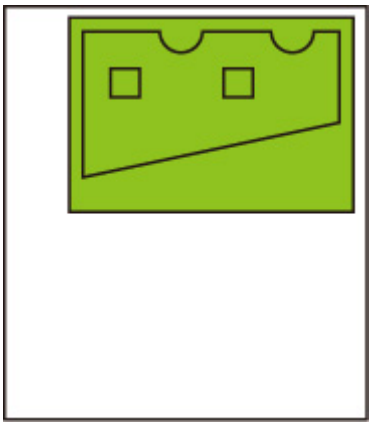

Merge

Specifies how colors should be processed when lines overlap.

This setting item is displayed by tapping in the following order.

(**Setup**) > **Device settings** > **Print settings** > **HP-GL/2 print settings** > **Line & pen manager**

Note

- The data is given priority when a specification command is included in the HP-GL/2 data.
- If the HP-GL/2 data does not include a specification command, the operation is performed using the specified selection value.

- **ON**

  The section where lines overlap becomes the mixed color of the intersecting lines.

- **OFF (Initial setting)**

  The section where lines overlap becomes the same color as one of the intersecting lines.

ENABLE MERGE EXAMPLE

- When **OFF** is selected:

  A. Data drawn previously
  B. Data drawn later than A

- When **ON** is selected:

Smooth

Makes arc drawing smoother.

This setting item is displayed by tapping in the following order.

(**Setup**) > **Device settings** > **Print settings** > **HP-GL/2 print settings** > **Line & pen manager**

- **Software (Initial setting)**

  Draws arcs using HP-GL/2 data settings.

  Default value of the central angle of an arc in HP-GL/2 is 5° (Regular 72-sided polygon) if the angle is not specified using a HP-GL/2 command.

- **Smoothing**

  Draws curves that are smoother than arcs with a central angle of 1°.

SMOOTHING EXAMPLES

- When **Software** is selected:

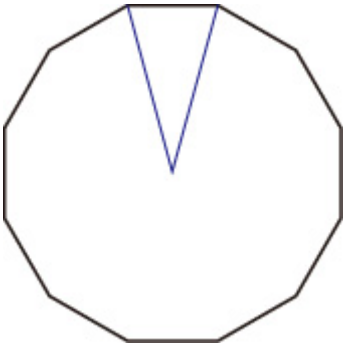

- When **Smoothing** is selected:

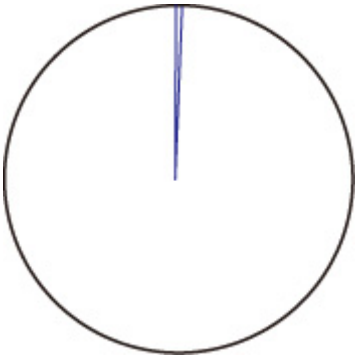

Thicken fine lines

Performs correction to avoid breaks in fine lines.

This setting item is displayed by tapping in the following order.

(**Setup**) > **Device settings** > **Print settings** > **HP-GL/2 print settings** > **Line & pen manager**

- **ON**

  Corrects line widths so fine lines are drawn more sharply, without breaking.

  The line color is not changed.

- **OFF (Initial setting)**

  Thin lines are not corrected.

  Some line thicknesses may cause them to become broken.

Adjust faint lines

Performs correction so that bright colored fine lines are printed more clearly.

This setting item is displayed by tapping in the following order.

(**Setup**) > **Device settings** > **Print settings** > **HP-GL/2 print settings** > **Line & pen manager**

- **ON**

  Adjusts the colors of brightly colored fine lines so they are drawn more clearly.

- **OFF (Initial setting)**

  Fine lines are not corrected.

Width correction

Corrects pen widths in accordance with a specific correction setting. Correction settings can be configured for two groups: **Black/gray** and **Color**.

Select and apply the correction amount according to the pen color when performing a line drawing command of HP-GL/2 data.

This setting item is displayed by tapping in the following order.

(**Setup**) > **Device settings** > **Print settings** > **HP-GL/2 print settings** > **Line & pen manager**

Note

- This setting is not applied for the white pen, which has the same RGB values (255).
- This setting is applied to vector data line widths.
- When this setting is a minus value, it is not applied to fine lines of widths that are less than the minimum line width of the printer.
- If the setting value is smaller than 1 dot, the value of 1 dot width is applied.
- When **ON** is selected for **Thicken fine lines**, the resulting line may be thicker than the specified setting.

- **Black/gray**

  For configuring the correction setting of black and gray line widths.

  A value within the range of -20 to +20 can be specified. 1 unit of the correction value is equivalent to 0.025 mm.

- **Color**

  For configuring the correction setting of color line widths.

  A value within the range of -20 to +20 can be specified. 1 unit of the correction value is equivalent to 0.025 mm.

LINE WIDTH CORRECTION EXAMPLE

- Negative (-) setting

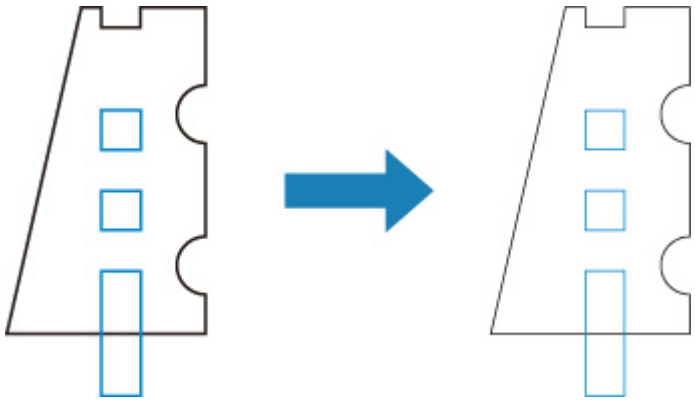

- Positive (+) setting

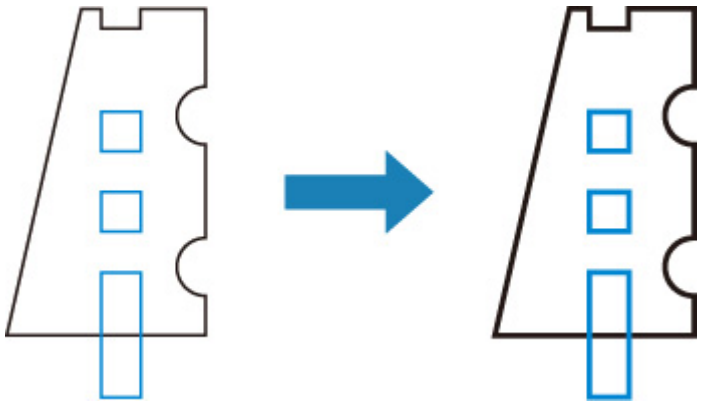

Print color list for palettes

Prints out the sample (256 colors) of the color specified in each pen number. The coloring also changes depending on the paper type to be printed.

This setting item is displayed by tapping in the following order.

(**Setup**) > **Device settings** > **Print settings** > **HP-GL/2 print settings** > **Line & pen manager**

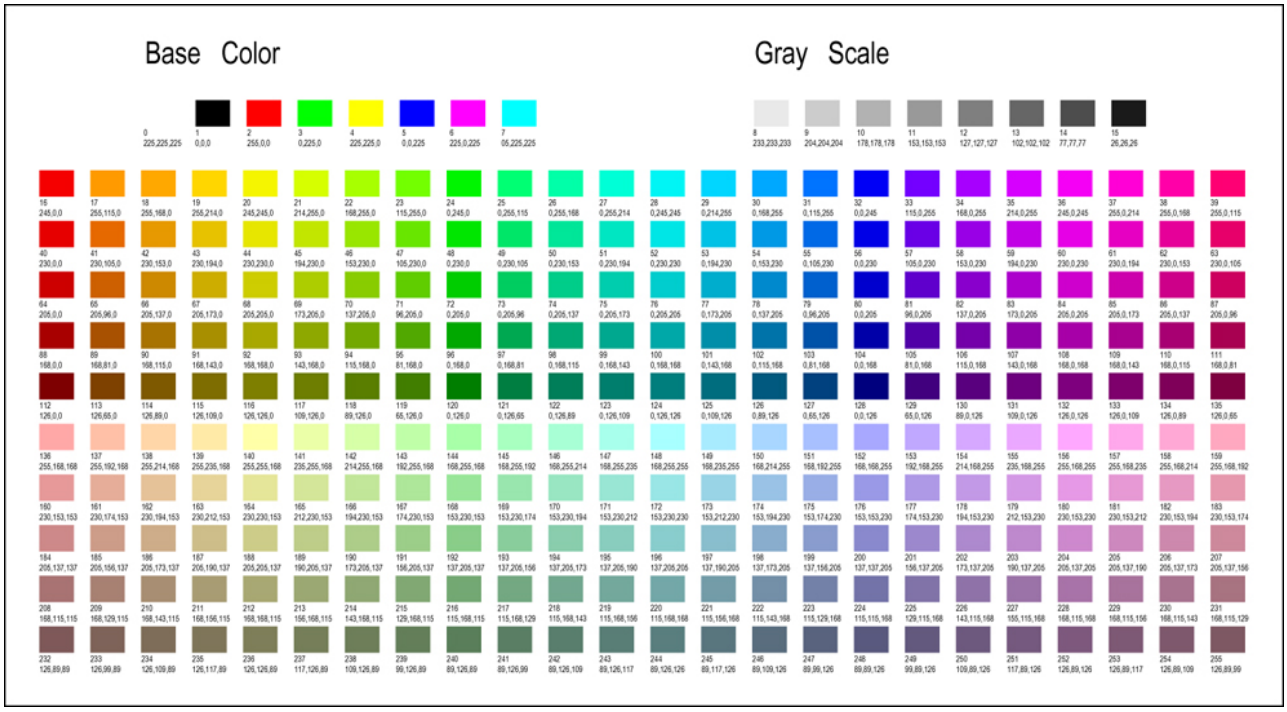

Warning display

Displays HP-GL/2 warnings.

The display is switched when two GL/2 warnings below occur.

- Warnings when the printer's parameter setting specification does not support the parameter settings of created HP-GL/2 data
- HP-GL/2 warning commands when the printer does not support the created HP-GL/2 data

This setting item is displayed by tapping in the following order.

(**Setup**) > **Device settings** > **Print settings** > **HP-GL/2 print settings** > **Processing options**

Note

- Warning is always displayed when one of the errors below occurs regardless of the setting.
  - When virtual GL/2 memory exceeds acceptable level
  - When GL/2 display list memory is insufficient
  - When the number of polygon vertexes which GL/2 data has exceeds acceptable level
- Warning is always displayed on the status monitor or Remote UI regardless of the setting.

- **Enable**

  Displays specific GL/2 warning on the touch screen.

- **Disable (Initial setting)**

  Does not display specific GL/2 warning on the touch screen.

Detect image size

Specifies the output object area method that provides efficient printing, which avoids parts of images being cut off when a HP-GL/2 data does not include image drawing range information.

This setting item is displayed by tapping in the following order.

(**Setup**) > **Device settings** > **Print settings** > **HP-GL/2 print settings** > **Processing options**

- **OFF (Initial setting)**

  Normally, use this setting.

  Note

  - When a HP-GL/2 data include image drawing range information, the image drawing range is determined using that information.

    When a HP-GL/2 data does not include image drawing range information, the image drawing range use the printer's maximum roll paper width as the horizontal dimension and 1.5 times the maximum roll paper width as the vertical dimension.

- **Command priority**

  When select **OFF**, the drawing image is missing or is output as a blank sheet, use this setting.

  Note

  - When a HP-GL/2 data include image drawing range information, the image drawing range is determined using that information.

    When a HP-GL/2 data does not include image drawing range information, the image drawing range is determined using the value designated by another command in the data.

    However, not all HP-GL/2 data can be supported.

Select palette

Selects a palette to use when printing HP-GL/2 data.

According to the setting of the selected palette, the line width, line color, and line attributes are specified.

This setting item is displayed by tapping in the following order.

(**Setup**) > **Device settings** > **Print settings** > **HP-GL/2 print settings** > **Line & pen manager** > **Pen setup**

- **Software (Initial setting)**

  Performs printing with the setting of HP-GL/2 data.

- **Palette A**

  Performs printing with the setting of Palette A.

- **Palette B**

  Performs printing with the setting of Palette B.

- **Factory**

  Performs printing with the predefined settings.

Note

- When you select a palette other than **Software**, the printer performs printing with the pen setting of the specified palette even if the image data has the pen setting.
- **Palette A** and **Palette B** have the same settings as **Factory** in the initial state.

Define palette

Specifies each pen setting in **Palette A** and **Palette B**.

The pen setting in **Factory** cannot be changed.

This setting item is displayed by tapping in the following order.

(**Setup**) > **Device settings** > **Print settings** > **HP-GL/2 print settings** > **Line & pen manager** > **Pen setup**

- **Palette A**

  Specifies the line width, line color, and line attributes from **Pen 0** to **Pen 15**.

  Each initial pen setting in **Palette A** is same setting as **Factory**.

- **Palette B**

  Specifies the line width, line color, and line attributes from **Pen 0** to **Pen 15**.

  Each initial pen setting in **Palette B** is same setting as **Factory**.

- **Factory**

  Performs printing with the predefined settings (line width/line color/line attributes).

  The pen setting cannot be changed.

Pen 0 to Pen 15

Specifies **Width**, **Color**, and **Line attributes** settings for each of the 16 pens (numbered 0 to 15) that make up each palette.

This setting item is displayed by tapping in the following order.

(**Setup**) > **Device settings** > **Print settings** > **HP-GL/2 print settings** > **Line & pen manager** > **Pen setup** > **Define palette** > **Palette A** or **Palette B**

- **Width**

  Specifies the line width as one of the values below.

  0.04mm/0.08mm/0.13mm/0.18mm/0.25mm/0.35mm

  0.50mm/0.65mm/0.70mm/0.80mm/0.90mm/1.0mm

  1.4mm/2.0mm/3.0mm/5.0mm/8.0mm/12.0mm

- **Color**

  Specifies the line color from the color palette number from 0 to 255 indicated by the color sample printed with **Print color list for palettes**.

- **Line attributes**

  Specifies line cap and joint attributes.

  - **No setting**

    Leaves line caps unchanged.

    Leaves line joints mitered.

  - **Circle setting**

    Rounds line caps and line joints.

Reset palette

Resets palette pen parameters configured using **Define palette**.

This setting item sets the palette pen parameters back to the default.

This setting item is displayed by tapping in the following order.

(**Setup**) > **Device settings** > **Print settings** > **HP-GL/2 print settings** > **Line & pen manager** > **Pen setup**

- **All palettes**

  Resets all palette pen parameters.

- **Palette A**

  Resets **Palette A** pen parameters.

- **Palette B**

  Resets **Palette B** pen parameters.

PALETTE DEFAULTS

Palette defaults are the same settings as **Factory** in the initial state.

Pen number	Line Width (mm)	Colors (R, G, B)	Line Attributes	Tip	Connecting Line
0	0.13	0 (255, 255, 255)	Rounds	Rounds	Rounds
1	0.18	1 (0, 0, 0)	Rounds	Rounds	Rounds
2	0.25	2 (255, 0, 0)	Rounds	Rounds	Rounds
3	0.35	3 (0, 255, 0)	Rounds	Rounds	Rounds
4	0.50	4 (255, 255, 0)	No setting	No setting	Miter
5	0.65	5 (0, 0, 255)	No setting	No setting	Miter
6	0.70	6 (255, 0, 255)	No setting	No setting	Miter
7	0.80	7 (0, 255, 255)	No setting	No setting	Miter
8	0.90	8 (233, 233, 233)	No setting	No setting	Miter
9	1.0	12 (127, 127, 127)	No setting	No setting	Miter
10	1.4	19 (255, 214, 0)	No setting	No setting	Miter
11	2.0	27 (0, 255, 214)	No setting	No setting	Miter
12	3.0	35 (214, 0, 255)	No setting	No setting	Miter
13	5.0	68 (205, 205, 0)	No setting	No setting	Miter

14	8.0	100 (0, 168, 168)	No setting	No setting	Miter
15	12.0	110 (168, 0, 115)	No setting	No setting	Miter

Menu Setting Combinations

- Conserve paper and Auto rotation
- Enlarge/Reduce (Scaling) and Auto rotation
- Print centered and Cut to standard size
- Cut to standard size and Auto rotation and Enlarge/Reduce (Fit paper size)
- Detect image size and Oversize
- Detect image size and Print centered

Conserve paper and Auto rotation

When **Conserve paper** and **Auto rotation** are both specified, **Auto rotation** is performed first, followed by the **Conserve paper** process.

After **Auto rotation** is applied to the print data, the image is printed with upper and lower blank areas removed.

Conserve paper AND Auto rotation EXAMPLE

Print data (image drawing range)

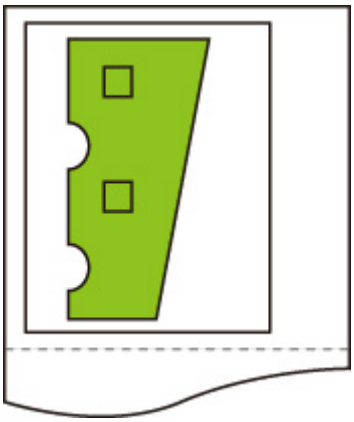

Image after auto rotation

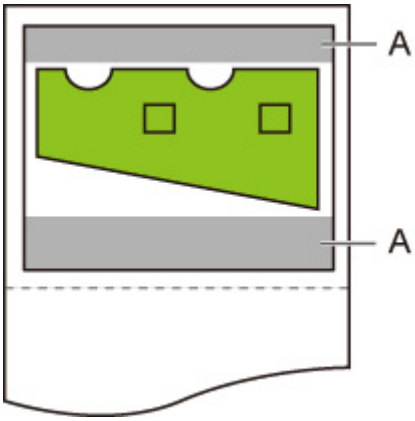

A. Blank area

Printed image

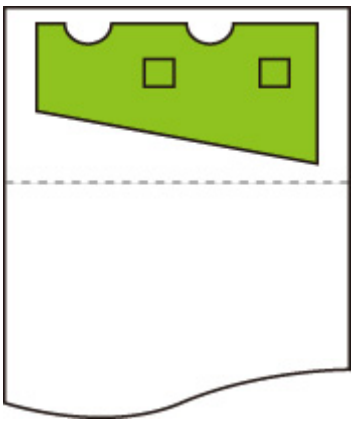

Printed without upper/lower blank area.

Enlarge/Reduce (Scaling) and Auto rotation

When both **Enlarge/Reduce** (**Scaling**) and **Auto rotation** are specified, **Enlarge/Reduce** (**Scaling**) is done first and then **Auto rotation** is done to determine if printing is possible.

Printing is done without **Auto rotation** if the size of the image after doing **Enlarge/Reduce** (**Scaling**) would cause the image to run off the edge of the paper were **Auto rotation** executed.

Enlarge/Reduce (Scaling) AND Auto rotation EXAMPLE

Print data (image drawing range)

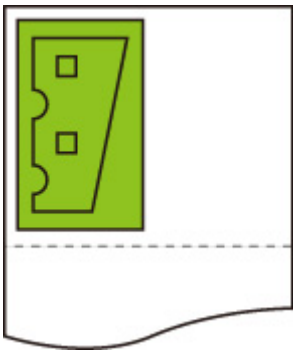

- Printed image with **Enlarge/Reduce** (**Scaling**) only.

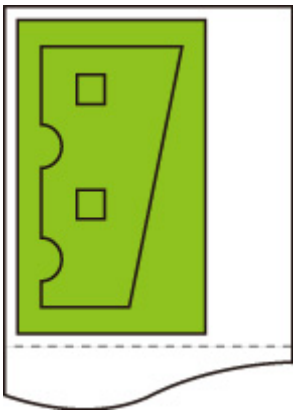

- Printed image when the image runs off the edge of paper.

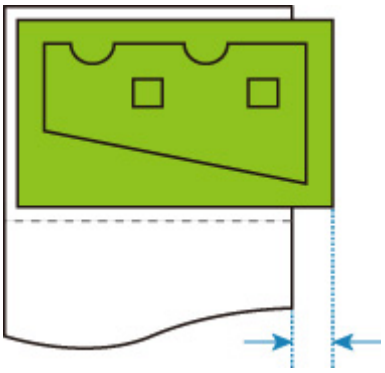

Auto rotation is not performed.

Print centered and Cut to standard size

When both **Print centered** and **Cut to standard size** are specified, first the optimum standard size is determined based on the HP-GL/2 data and the roll paper loaded on the printer.

Next, **Print centered** is performed in accordance with the standard size.

Print centered AND Cut to standard size EXAMPLE

When A3 width roll paper is loaded, A3 portrait is chosen as the optimal standard size based on the roll paper width and image size.

Next, **Print centered** is performed in accordance with the A3 portrait.

Print data (image drawing range)

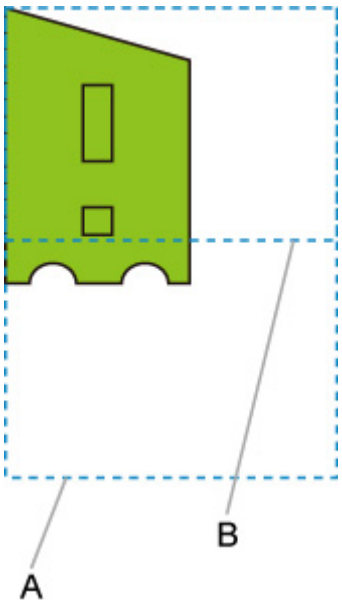

A. Virtual area for A3 size (portrait)
B. Virtual area for A4 size (landscape)

- Printed image when **ON** is selected for **Print centered** and **OFF** is selected for **Cut to standard size**

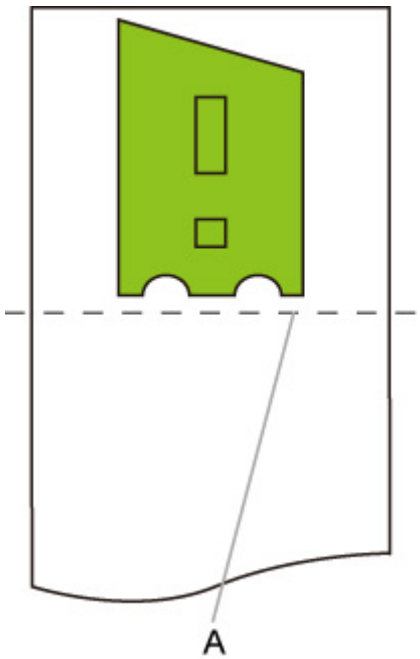

A. Position of cut

- Printed image when **ON** is selected for **Print centered** and **ON** is selected for **Cut to standard size**

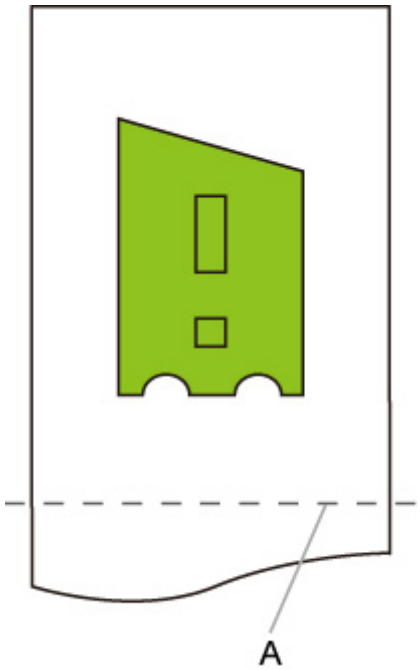

A. Position of cut for A3 size (portrait)

Cut to standard size and Auto rotation and Enlarge/Reduce (Fit paper size)

When **Cut to standard size**, **Auto rotation**, and **Enlarge/Reduce** (**Fit paper size**) are all specified, first suitable standard size candidates are determined based on the roll paper loaded on the printer.

Next, it decides the optimum standard size and rotation direction from the matching result between the data to which **Auto rotation** is applied and all candidate sizes.

Finally, **Enlarge/Reduce** (**Fit paper size**) process is performed according to the decided standard size.

SMALL IMAGE EXAMPLE

When A3 width roll paper is loaded, A4 landscape is chosen as the optimal standard size based on the roll paper width and image size.

Next, **Auto rotation** is performed in accordance with the A4 landscape. Finally, the image is enlarged and printed to match A4 size paper.

Print data (image drawing range)

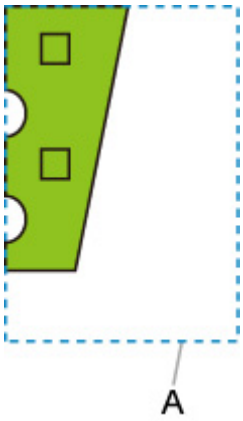

A. Virtual area for A4 size

Since the image fits on A4 size paper, A4 landscape is chosen as the standard size.

- Image after auto rotation

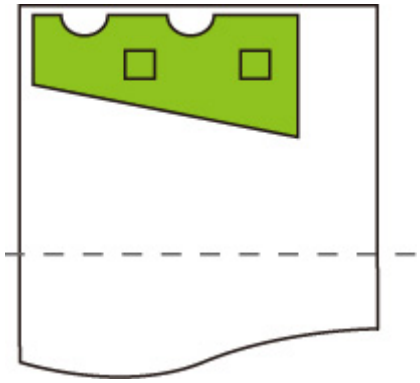

- Printed image after fit to paper

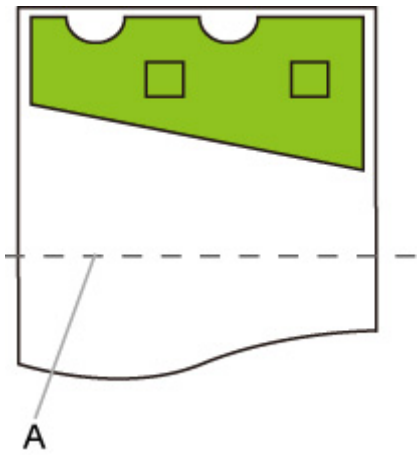

A. Position of cut for A4 size

LARGE IMAGE EXAMPLE

When A3 width roll paper is loaded, A3 portrait is chosen as the optimal standard size based on the roll paper width and image size.

Next, **Auto rotation** is performed in accordance with the A3 portrait. Finally, the image is reduced and printed to match A3 size paper.

Print data (image drawing range)

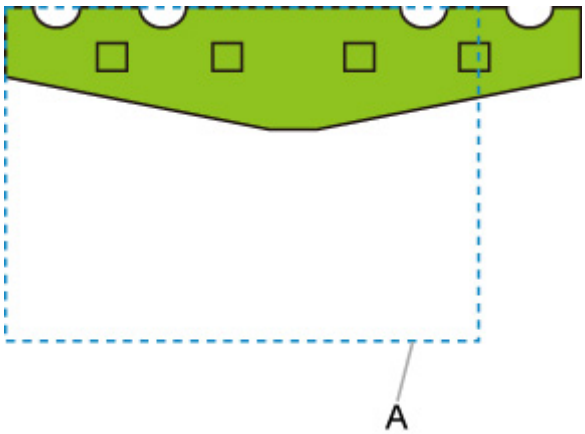

A. Virtual area for A3 size

Since the image does not fit on A3 size paper, A3 portrait is chosen as the maximum standard size.

- Image after auto rotation

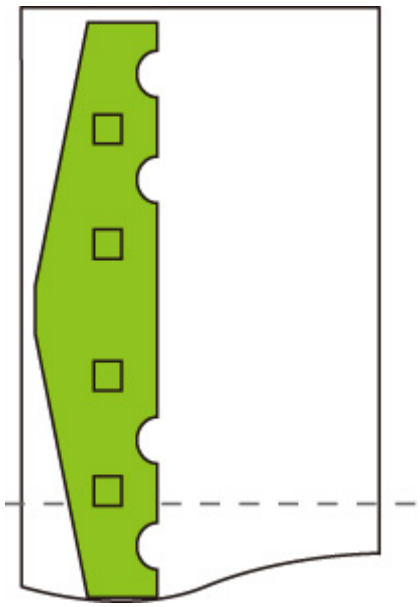

- Printed image after reduced

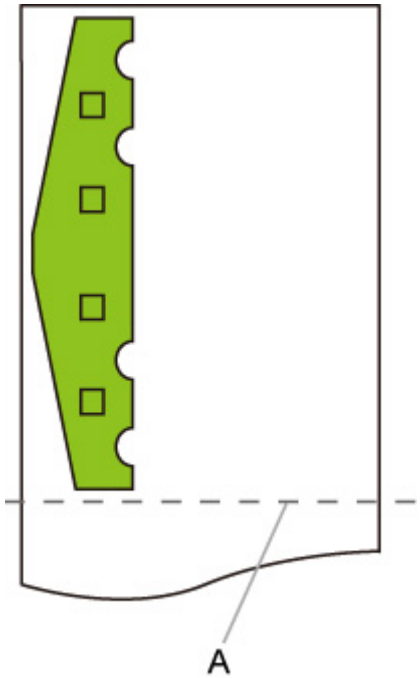

A. Position of cut for A3 size

Detect image size and Oversize

Operation is as described below when both **Detect image size** and **Oversize** are specified.

- **When OFF or Command priority is selected for Detect image size and Disable is selected for Oversize:**

  First, determine the image drawing range based on the **Detect image size** setting, and then perform the processing when **Disable** is selected for **Oversize**.

  Since margins are added inside the image drawing range, images may be chipped depending on the layout.

- **When OFF or Command priority is selected for Detect image size and Enable is selected for Oversize:**

  First, determine the image drawing range based on the **Detect image size** setting, and then perform the processing when **Enable** is selected for **Oversize**.

  Since margins are added outside the image drawing range, images will not be chipped due to the margins.

  However, you will need to print on paper that is larger than the size of the image drawing range determined based on **Detect image size** setting, plus the top, bottom, left and right margins.

Note

- Not all HP-GL/2 data can be supported.

Detect image size AND Oversize EXAMPLE

The example below shows printing of data in which a figure is located in the upper left corner with margins below and to the right, on roll paper that is larger than the command-specified image drawing range (size normally specified by the application).

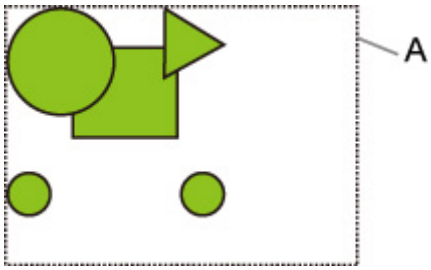

A: The image drawing range determined based on the **Detect image size** setting

- **When OFF or Command priority is selected for Detect image size and Disable is selected for Oversize:**

  Since margins are added inside the image drawing range, images may be chipped depending on the layout.

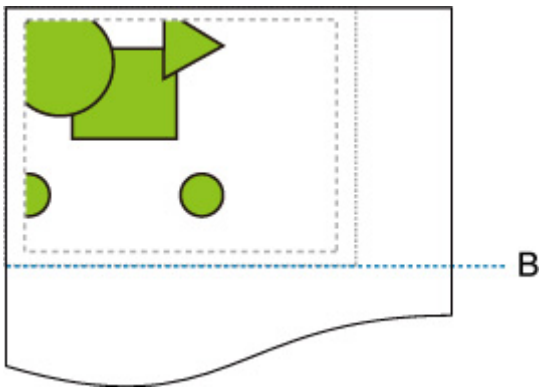

B: Position of cut

The paper is cut with the length of the image drawing range determined based on the **Detect image size** setting.

- **When OFF or Command priority is selected for Detect image size and Enable is selected for Oversize:**

  Since margins are added outside the image drawing range, images will not be chipped due to the margins.

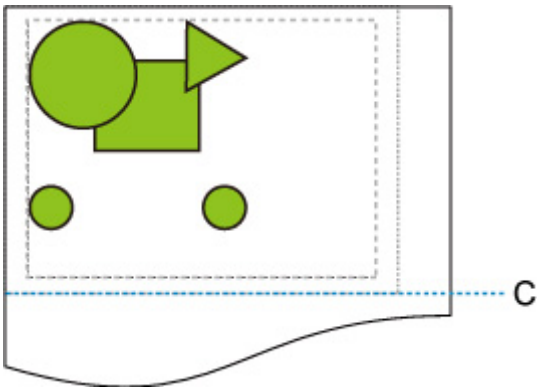

C: Position of cut

The paper is cut with the length obtained by adding the upper and lower margins to the length of the image drawing range determined based on the **Detect image size** setting.

Detect image size and Print centered

When **ON** is selected for **Print centered**, the image drawing range determined based on the **Detect image size** setting is printed in the center of the paper.

Detect image size AND Print centered EXAMPLE

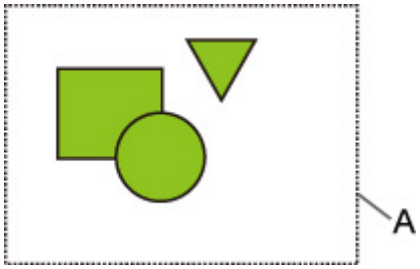

A: The image drawing range determined based on the **Detect image size** setting

Printed image

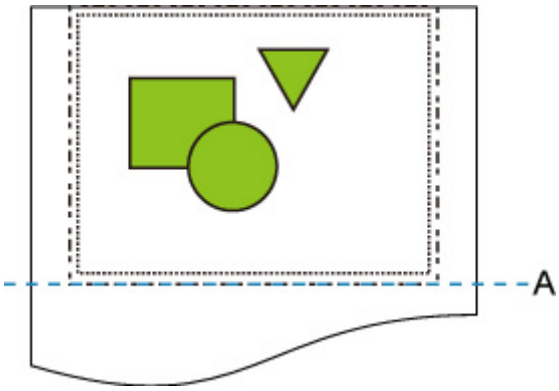

A: Position of cut

The image drawing range determined based on the **Detect image size** setting is printed at the center of the paper.

Standard Size Table

The table below shows the standard sizes supported by **Cut to standard size**.

For details on the page size supported by your printer, refer to Paper Sizes.

Standard Size (Portrait)	Width (mm)	Height (mm)	Standard Size (Landscape)	Width (mm)	Height (mm)
ISO A0	841.0	1189.0	ISO A1	841.0	594.0
ISO A1	594.0	841.0	ISO A2	594.0	420.0
ISO A2	420.0	594.0	ISO A3	420.0	297.0
A3 Nobi	329.0	483.0	No standard	-	-
ISO A3	297.0	420.0	ISO A4	297.0	210.0
ISO A4	210.0	297.0	No standard	-	-

Standard Size (Portrait)	Width (mm)	Height (mm)	Standard Size (Landscape)	Width (mm)	Height (mm)
ISO B1	707.0	1000.0	ISO B2	707.0	500.0
ISO B2	500.0	707.0	ISO B3	500.0	353.0
ISO B4	250.0	353.0	No standard	-	-

Standard Size (Portrait)	Width (mm)	Height (mm)	Standard Size (Landscape)	Width (mm)	Height (mm)
JIS B0	1030.0	1456.0	JIS B1	1030.0	728.0
JIS B1	728.0	1030.0	JIS B2	728.0	515.0
JIS B2	515.0	728.0	JIS B3	515.0	364.0
JIS B3	364.0	515.0	JIS B4	364.0	257.0
JIS B4	257.0	364.0	No standard	-	-

Standard Size (Portrait)	Width (mm)	Height (mm)	Standard Size (Landscape)	Width (mm)	Height (mm)
ANSI E	863.6	1117.6	ANSI D	863.6	558.8
ANSI F1	711.2	1016.0	No standard	-	-
ANSI D	558.8	863.6	ANSI C	558.8	431.8
ANSI C	431.8	558.8	Ledger	431.8	279.4
Ledger	279.4	431.8	Letter	279.4	215.9
Letter	215.9	279.4	No standard	-	-
No standard	-	-	Legal	355.6	215.9

Standard Size (Portrait)	Width (mm)	Height (mm)	Standard Size (Landscape)	Width (mm)	Height (mm)
ARCH E	914.4	1219.2	ARCH D	914.4	609.6
ARCH E1	762.0	1066.8	No standard	-	-
ARCH E2	660.4	965.2	No standard	-	-
ARCH E3	685.8	990.6	No standard	-	-
ARCH D	609.6	914.4	ARCH C	609.6	457.2

ARCH C	457.2	609.6	ARCH B	457.2	304.8
ARCH B	304.8	457.2	ARCH A	304.8	228.6
ARCH A	228.6	304.8	No standard	-	-

Standard Size (Portrait)	Width (mm)	Height (mm)	Standard Size (Landscape)	Width (mm)	Height (mm)
DIN C1	648.0	917.0	DIN C2	648.0	458.0
DIN C2	458.0	648.0	DIN C3	458.0	324.0
DIN C3	324.0	458.0	DIN C4	324.0	229.0
DIN C4	229.0	324.0	No standard	-	-

Status Print

You can print a "Status Print" report indicating the current status of the printer.

With "Status Print", information is printed regarding the printer firmware version, various settings, and the status of consumables.

Follow the procedure below to print.

1. Make sure printer is turned on.

2. On the HOME screen, tap (**Setup**).

   Menu Operations

3. Tap **Device settings**.

4. Tap **Test print**.

5. Tap **Status print**.

   Note

   - If you specify the administrator password, tap **Status print (administrator)**.

6. Tap **Yes**.

   The printer starts printing.

The following information is included.

Canon xxxxxxxxxxxxxxxxxxxx Status Print	Printer model
S/N	Printer serial number
Firm	Firmware version
Boot	Boot ROM version
Date	Date and time when the status print was output

Paper Info		
	Roll Media	**Type** of roll paper
	Cut Sheet	**Type** of cut sheet

Job Menu			
	Job History		
		Log *	Details of up to 5 jobs (Job name is printed as "*".)

*Printed only when **Status print (administrator)** is selected.

Settings

	Printer settings			
		Print settings	Setting values of **Print head movable width setting** and **Prioritize paper size**	
		Paper-related settings	Setting values of **Paper-related settings**	
	Device settings			
		Auto maintenance settings	Setting values of **Auto maintenance settings**	
		Device user settings	Setting values of **Other device settings**	
		Language selection	Setting value of **Language selection**	
		Firmware update notification	Setting values of **Update notification setting**	
		Monitoring service settings	Setting values of **Enable/disable monitoring service**	

Usage Condition		
	Hardware error	History information of **Hardware error**
	Error	History information of **Recoverable error**
	Warning	Warning history information
	Jam	History information of **Paper feed/transfer error**
	Maintenance cartridge usage / Remaining ink level	Values of **Ink consumed**
	Duty counter	Values of **Duty counter**

PARTS STATUS		
	COUNTER	Part status

Head information		
	HEAD LOT NUMBER/ DATE OF INSTALLATION	Information of **Head information**
	Head alignment performance log	History information of **Head alignment performance log**

COUNTER		
	MEDIA	Usage status by media
	THE NUMBER OF CUTS	Total number of cuts
	AFTER INSTALLATION	Number of days from the use start date

Changing Printer's Setting Using Web Browser

- Configuration Changes Using Web Browser
- Changeable Setting Items Using Web Browser
- Setting Password
- Registering Printer's Root Certificate to Web Browser for SSL Communication (Remote UI)
- Registering Printer's Root Certificate to Local Computer for SSL Communication
- Generating Server Certificate (Self-signed Certificate)
- Setting Mail Server
- Receiving Printer Status by E-mail

Configuration Changes Using Web Browser

You can check the printer status and change the printer settings using the web browser on your smartphone, tablet, or computer.

To check the printer status and to change the printer settings, display "Remote UI" on the web browser.

Note

- Remote UI is a software that enables you to perform operations, which are usually performed on the printer's operation panel, using a Web browser over a network.

  LAN connection with the printer is required to use Remote UI.
- You can use Remote UI on the following OS and the web browser.
  - iOS device

    OS: iOS 9.0 or later

    Web browser: iOS standard Web browser (Mobile Safari)
  - Android device

    OS: Android 4.4 or later

    Web browser: Android standard Web browser (Browser or Chrome)
  - macOS device

    OS: Mac OS X 10.9 or later

    Web browser: Safari 7.0 or later
  - Windows device

    OS: Windows 7 SP1 or later

    Web browser: Internet Explorer 11 or later, Google Chrome, Mozilla Firefox

1. Make sure printer is turned on.

2. Check printer's IP address.

   1. On the HOME screen, tap the **Network** icon.

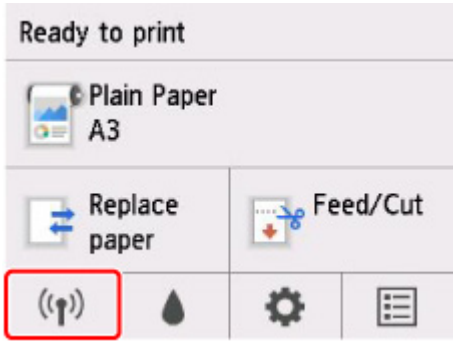

Depending on the type of LAN enabled, the icon displayed on the button may differ.

2. Tap the enabled LAN.

   Diagonal lines are displayed for disabled LAN icons.

3. Check **IPv4 address**.

3. Open web browser on your smartphone, tablet, or computer and enter IP address.

   Enter as following in the URL field of the web browser.

   http://XXX.XX.X.XXX

   Enter the IP address of the printer in "XXX.XX.X.XXX".

   When you access, "Remote UI" will be displayed on the web browser on your smartphone, tablet, or computer.

4. If you display Remote UI for the first time on your smartphone, tablet, or computer, select **For secure communication**.

   Download the root certificate, and then register it.

   Registering Printer's Root Certificate to Web Browser for SSL Communication (Remote UI)

   Note

   - Once you register the root certificate to the web browser on your smartphone, tablet, or computer, this step is not necessary after the next time.
   - If the root certificate is not registered, a message to warn you that the secure connection is not guaranteed may appear.

5. Select **Log in**.

   The password authentication screen appears.

   Note

   - When the standard user mode is enabled, choose either administrator mode or standard user mode to log on.

     After choosing a mode and selecting **Log in**, the password authentication screen of each mode appears.

6. Enter password.

   When the password authentication is complete, the menus that can be utilized are displayed on the web browser.

   Important

   - The password is set at the time of purchase. The password is the printer serial number. The printer serial number is printed on the sticker attached on the printer. It consists of 9 alphanumeric characters (four alphabets followed by five numbers).

     For details on setting password, see Setting Password.

7. Check printer status and change printer settings.

   For changeable setting items, see below.

   Changeable Setting Items Using Web Browser

8. When you finish checking printer status and changing printer settings, select **Log out**.

9. Close web browser.

Changeable Setting Items Using Web Browser

Note

- The items described here and the items displayed in the web browser may differ in display order.
- The item which can be used is different in administrator mode or in standard user mode.

Items for Security

Security (Item for administrator)

This function allows you to specify the password, the standard user mode settings, the operation restrictions, and SSL/TLS settings of certificate for encrypted communication.

For details on setting password, see Setting Password.

Operation panel lock (Item for administrator)

Select this item from **Custom settings** on **Device settings**.

Selecting **Enable** disables any operations using the operation panel.

A message informing you that operations are invalid appears when you tap the touch screen. An error or warning is displayed even while this function is enabled.

Items for Maintenance/Management

Utilities

This function allows you to set and execute the printer utility functions such as cleaning.

Job management

This function allows you to display the job history and print it. In addition, you can delete jobs from this item.

Note

- When you are logging on in administrator mode, you can restrict this function in standard user mode.

System info and LAN settings

This function allows you to check the system information and to change the LAN settings.

Using **IP filtering** in **Advanced setup** in **LAN settings**, you can permit or refuse the connection of a specific IP address for IPv4 address or IPv6 address.

Using **SNMP settings** in **Advanced setup** in **LAN settings**, you can specify the SNMP and MIB setting to management the printer via a network.

Important

- If you have refused the IP address of administrator's device using **IP filtering** by mistake, reset LAN settings of the printer. To reset LAN settings, select **System info and LAN settings** > **LAN settings** > **Advanced setup** > **Reset LAN settings**, and then select **Yes**.

Note

- Some of the menu is available only when you logged on in administrator mode.

Language selection (Item for administrator)

This function allows you to change the language on the display.

Items for Printer

Device settings

This function allows you to change the printer settings such as the energy saving settings and the print settings.

Additionally, this function allows you to receive the printer status information such as the remaining ink level and the error.

- Setting Mail Server
- Receiving Printer Status by E-mail

You can disable any operations using the operation panel from **Operation panel lock** on **Custom settings**.

Note

- Some of the menu is available only when you logged on in administrator mode.

AirPrint settings

This function allows you to specify the AirPrint settings, such as position information.

Other Items

Printer status

This function displays printer information such as the remaining ink amount, the status, and detailed error information.

You can also connect to the ink purchase site or support page, and use Web Services.

Manual (Online)

This function displays the *Online Manual*.

Setting Password

Each of passwords for administrator and standard user can be set.

When logging on with password for administrator, all settings can be changed.

When logging on with password for standard user, some of the settings can be changed.

When logging on with password for administrator, you can restrict the function for standard user.

- Setting Administrator Password
- Setting Standard User Password

Note

- Password can be set only when you are logged in administrator mode.

Setting Administrator Password

Change the administrator password by following the steps below.

Important

- The password is set at the time of purchase. The password is the printer serial number. The printer serial number is printed on the sticker attached on the printer. It consists of 9 alphanumeric characters (four alphabets followed by five numbers).

1. Start up Remote UI.

2. Select **Security**.

3. Select **Administrator password setting**.

4. Select **Change administrator password**.

   If an administrator password is not specified, the confirmation message appears. Confirm the message and select **Yes**. When message appears again, confirm it and select **OK**.

5. Select range where administrator password is valid and select **OK**.

   Remote UI or other tools
   Entering the administrator password is required to change the setting items using the Remote UI or some software.

   Operation panel/Remote UI/other tools
   Entering the administrator password is required to change the setting items using the operation panel of the printer, the Remote UI, or some software.

6. Enter password and select **OK**.

   Important

   - The following character restrictions apply to the password:

- Set the password by using 4 to 32 characters.
- The allowed characters are single-byte alphanumeric characters.
- For security reasons, we recommend you use 6 and more alphanumeric characters.

7. When completion message appears, select **OK**.

Setting Standard User Password

For restricting the function for standard user, enable the standard user mode and set a standard user password by following the steps below.

1. Start up Remote UI.

2. Select **Security**.

   The menus appear.

3. Select **Standard user mode settings**.

4. When confirmation message appears, select **Yes**.

5. Enter password and select **OK**.

   Important

   - The following character restrictions apply to the password:
     - Set the password by using 4 to 32 characters.
     - The allowed characters are single-byte alphanumeric characters.
     - For security reasons, we recommend you use 6 and more alphanumeric characters.

6. When completion message appears, select **OK**.

Registering Printer's Root Certificate to Web Browser for SSL Communication (Remote UI)

If the printer's root certificate has not been registered to the web browser, a message to warn you that the secure connection is not guaranteed may appear.

When you display Remote UI for the first time on your smartphone, tablet, or computer, download the root certificate, and then register it to the web browser. The secure connection will be confirmed and a message will not appear. However, the message may appear depending on a web browser even after you have registered the root certificate.

How to register the root certificate varies depending on the web browser.

- For Internet Explorer
- For Safari
- For Chrome on Android
- For Mobile Safari on iOS

Operating procedure may differ depending on the version of your web browser. For other web browser, refer to each help.

Important

- Make sure that you have accessed to the printer IP address correctly by checking the URL field of the web browser before registering the root certificate.
- If the printer is connected via IPv6 using Windows, you need to generate a server certificate using Remote UI.

  For details, see Generating Server Certificate (Self-signed Certificate).

For Internet Explorer

1. Select **For secure communication** on Remote UI.

2. Select **Download**.

   Downloading the root certificate is started.

3. If confirmation screen appears, select **Open**.

   Certificate screen is displayed.

   Note

   - To save the certificate file to your device and register it, select **Save**. Select **Internet options** from **Tool** menu of Internet Explorer, register the root certificate from **Certificates** on **Content** sheet.

4. Select **Install Certificate**.

   Certificate Import Wizard screen is displayed.

5. Select **Next**.

6. Select **Place all certificates in the following store**.

7. Select **Browse**.

   Select Certificate Store screen is displayed.

8. Select **Trusted Root Certification Authorities** and **OK**.

9. Select **Next** on **Certificate Import Wizard** screen.

10. If **Completing the Certificate Import Wizard** appears, select **Finish**.

    Security Warning screen is displayed.

11. Make sure that thumbprint on **Security Warning** screen matches printer's thumbprint.

    The printer's thumbprint is displayed in **Root cert. thumbprint (SHA-1)** column or **Root cert. thumbprint (SHA-256)** column when tapped in the following order.

    (**Setup**) > **Printer information** > **System information**

12. If thumbprint on **Security Warning** screen matches printer's thumbprint, select **Yes**.

13. Select **OK** on **Certificate Import Wizard** screen.

    The root certificate registration is completed.

For Safari

1. Select **For secure communication** on Remote UI.

2. Select **Download**.

   Downloading the root certificate is started.

3. Open the downloaded file.

   Keychain access starts up and **Add Certificates** screen is displayed.

4. Select **Add**.

   Information on the certificate is displayed.

Note

- You can also add the certificate by selecting **Show Certificate**, checking certificate name to add, and then selecting the same certificate on Keychain access.

5. Make sure that fingerprint of certificate detail information matches printer's thumbprint.

   The printer's thumbprint is displayed in **Root cert. thumbprint (SHA-1)** column or **Root cert. thumbprint (SHA-256)** column when tapped in the following order.

   (**Setup**) > **Printer information** > **System information**

6. If fingerprint of certificate detail information matches printer's thumbprint, display information on certificate from the menu or by double-clicking the certificate, and select **Always Trust** on **Trust**.

   The root certificate registration is completed.

   Note

   - If a password is set on your device, entering a password may be required.

For Chrome on Android

1. Select **For secure communication** on Remote UI.

2. Select **Download**.

   Downloading the root certificate is started and then **Name the certificate** screen is displayed.

3. As entering the root certificate name is required, enter an arbitrary certificate name and select **OK**.

   The root certificate registration is completed.

   Note

   - If PIN or password is not set as security type, the attention screen may appear. Select **OK**, and then set the security type to PIN or password.

After Root Certificate Registration

We recommend that you make sure that the correct root certificate has been registered.

To make sure that the correct root certificate has been registered, make sure that thumbprint of certificate information matches printer's thumbprint. Follow the steps below.

Note

- Some Android devices cannot be checked the thumbprint of a registered route certificate.

1. From **Settings** menu on your device, select **Security**, **Trust credentials**, and **USER**.

   The list of downloaded certificates appears.

2. Select downloaded certificate.

   The certificate information appears.

3. Make sure that thumbprint of certificate information matches printer's thumbprint.

   The printer's thumbprint is displayed in **Root cert. thumbprint (SHA-1)** column or **Root cert. thumbprint (SHA-256)** column when tapped in the following order.

   (**Setup**) > **Printer information** > **System information**

4. If thumbprint of certificate information screen matches printer's thumbprint, select **OK**.

   The root certificate registration is completed.

   If the message to warn you that the secure connection is not guaranteed appears when you select **Log in** on Remote UI after registering the root certificate, restart the web browser. The message will not appear on the web browser.

Note

- Depending on the Android device, a warning may appear even after registering the proper root certificate.

For Mobile Safari on iOS

1. Select **For secure communication** on Remote UI.

2. Select **Download**.

   Downloading the root certificate is started and then **Install Profile** screen is displayed.

3. Select **Install**.

   Warning screen is displayed.

   Note

   - If a password is set on your device, entering a password may be required.

4. Select **Install**.

5. Select **Install** on displayed dialog.

   The root certificate registration is completed.

Registering Printer's Root Certificate to Local Computer for SSL Communication

To use Device Management Console or Accounting Manager, etc. when you connect the printer to a computer using SSL encrypted communication, you need to register (import) the printer's root certificate to your computer.

Procedure to register the certificate varies depending on your operation environment.

Important

- If the printer is connected via IPv6 using Windows, you need to generate a server certificate using Remote UI.

  For details, see Generating Server Certificate (Self-signed Certificate).

- For Windows 10/Windows 8.1
- For Windows 7
- For macOS

Operation procedure may differ depending on your OS version.

For Windows 10/Windows 8.1

The procedure below describes how to import a root certificate in Windows 10/Windows 8.1.

1. Start up Remote UI.

2. Select **For secure communication**.

   Note

   - You can download a certificate from Status Monitor.

     1. Open status monitor.

        Open the printer's property, and select **Status Monitor...** on **Main**.

     2. Download a certificate.

        Select **Download Security Certificate** from the **Remote UI** menu.

3. Select **Download**.

   The root certificate will be downloaded.

4. When download confirmation screen is displayed, select **Open**.

   The **Certificate** screen appears.

5. Select **Install Certificate**.

The **Certificate Import Wizard** screen appears.

6. Select **Local Machine**.

    1. Select **Local Machine** on the startup screen of **Certificate Import Wizard**.

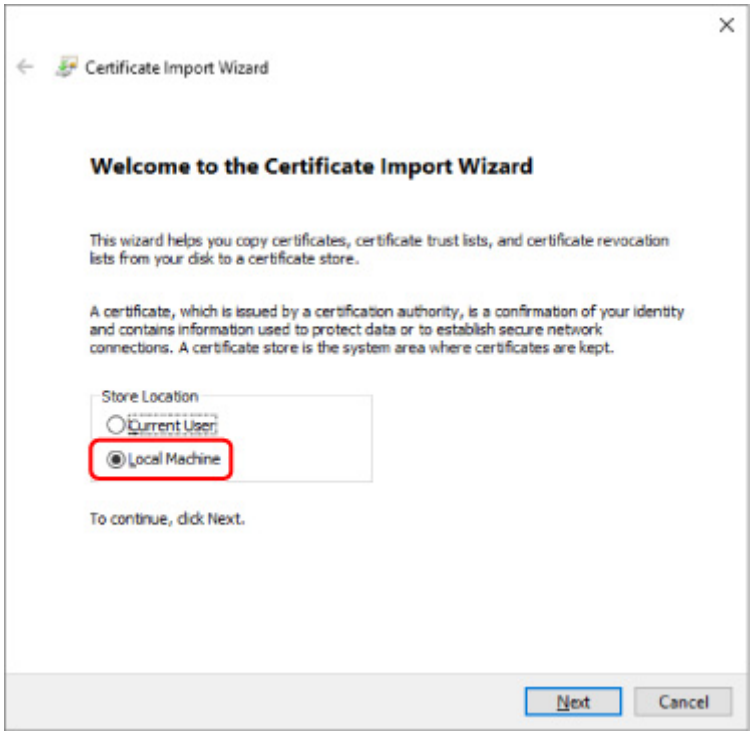

    2. Select **Next**.

    3. Select **Yes** on the displayed screen.

    The **Certificate Store** screen appears.

7. Select **Place all certificates in the following store**.

8. Select **Trusted Root Certificate Authorities**.

    1. Select **Browse** to open the **Select Certificate Store** screen.

    2. Select **Trusted Root Certificate Authorities** from the list and select **OK**.

    3. Select **Next** on the **Certificate Store** screen.

9. Select **Finish**.

    When the **Completing the Certificate Import Wizard** screen appears, check the settings and select **Finish**.

For Windows 7

The procedure below describes how to import a root certificate in Windows 7.

Important

- Be sure to create a certificate snap-in before importing a root certificate.

  The root certificate will be registered to the local user if you import it without creating a certificate snap-in.

Creating Certificate Snap-in

1. Start up Microsoft Management Console.

   Enter **MMC** on **Search programs and files** in the **Start** menu and press the Enter key.

2. Select **Yes** on displayed screen.

3. Select **Add/Remove Snap-in** from **File** menu.

   The **Add or Remove Snap-ins** screen appears.

4. Add **Certificate** snap-in.

   1. Select **Certificates** from **Available snap-ins** list and select **Add**.

   2. Select **Computer account** for **This snap-in will always manage certificates for** on the **Certificates snap-in** screen and select **Next**.

   3. Select **Local computer** on the **Select computer** screen and select **Finish**.

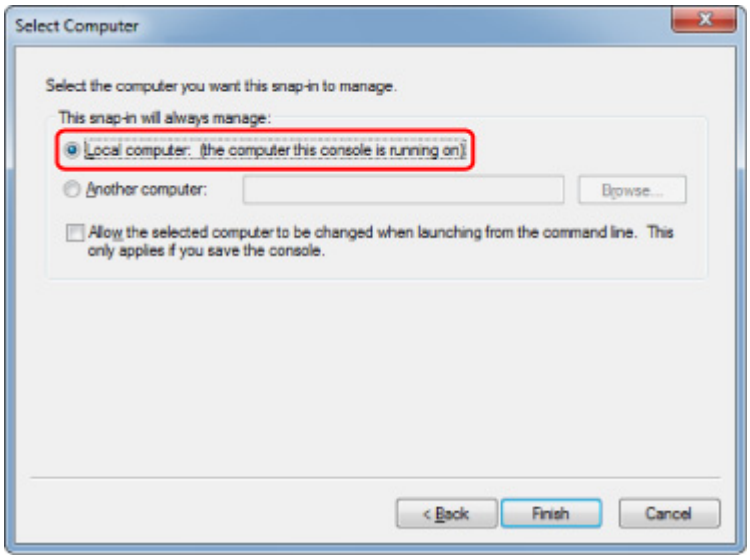

   4. Select **OK** on the **Add or Remove Snap-ins** screen.

Downloading Certificate

1. Start up Remote UI.

2. Select **For secure communication**.

   Note

   - You can download a certificate from Status Monitor.

     1. Open status monitor.

        Open the printer's property, and select **Status Monitor...** on **Main**.

     2. Download a certificate.

        Select **Download Security Certificate** from the **Remote UI** menu.

3. Select **Download**.

4. Select **Save**.

Importing Certificate

1. Open **Certificate Import Wizard**.

   1. On the left window, open **Trusted Root Certificate** from **Certificate** on **Console Root**.

   2. Right-click **Certificates** and select **Import** from **All tasks**.

2. Specify certificate file to import.

   1. Select **Next**.

   2. Specify the certificate file to import on **File name** and select **Next**.

3. Specify certificate store.

   1. Select **Place all certificates in the following store**.

   2. Select **Trusted Root Certificate Authorities** for **Certificates Store**.

4. Finish certificate import wizard.

   1. Select **Next** and check the specified settings.

   2. Select **Finish** to finish the wizard.

3. Select **OK** on the displayed screen.

Checking Imported Certificate

Make sure the imported certificate has been registered to your computer.

1. Display certificate list.

   On the left window of Microsoft Management Console, select **Console Root** > **Certificates (Local Computer)** > **Trusted Root Certificate Authorities** in this order, and Select **Certificates** to display the certificate list.

2. Check registered certificate.

   Make sure the imported certificate name is displayed on the list.

   Note

   - Make sure you can see the registered certificate from **Current user** by creating the **Current user** snap-in.

Note

- When you finish Microsoft Management Console, a message asking you whether to save the console setting. If you continue to apply the same settings next, select **Yes** to save.

For macOS

The procedure below describes how to import a root certificate in macOS.

1. Start up Remote UI.

2. Select **For secure communication**.

3. Select **Download**.

   The root certificate will be downloaded.

4. Open downloaded certificate file.

   When the download procedure is completed, a downloaded item pops up on the right of the screen.

   Double-click the downloaded certificate on the list starts up **Keychain Access** and the **Add Certificates** screen appears.

   Note

   - If the downloaded item does not pop up, select the **Show Downloads** button on the right.

- Selecting the magnifying glass icon on the right of download list displays the folder containing the certificate.

5. Select **Add**.

   Select the destination for the certificate on **Keychain**.

   Selecting **Add** displays information on the certificate.

   Note

   - You can add the certificate by selecting the same certificate on **Keychain Access**. Check the name of certification to add after selecting **View Certificates**.

6. Check certificate.

   Make sure the fingerprint of certificate shown on **Details** corresponds with the root certificate thumbprint of the printer.

   The printer's thumbprint is displayed in **Root cert. thumbprint (SHA-1)** column or **Root cert. thumbprint (SHA-256)** column when tapped in the following order.

   (**Setup**) > **Printer information** > **System information**

7. Select **Always Trust**.

   If the fingerprint of certificate detail information matches printer's thumbprint, display information on certificate from the menu or by double-clicking the certificate, and select **Always Trust** on **Trust**.

   The root certificate has been registered.

   Note

   - Entering the password may be required if you specify it for your printer.

Generating Server Certificate (Self-signed Certificate)

When you use SSL connection via IPv6 network, you need to generate an IPv6 server certificate using the printer.

Generate the server certificate from Remote UI.

Follow the procedure below.

1. Checking Printer's IP Address
2. Generating Server Certificate
3. Checking Generated Server Certificate

Important

- If you generate an IPv6 server certificate, you cannot use SSL communication via IPv4. In addition, a warning message may appear if you are using Remote UI.

  To reset the IPv6 server certificate, tap in the following order from the operation panel.

  (**Setup**) > **Device settings** > **LAN settings** > **Wi-Fi** / **Wireless Direct** / **Wired LAN** > **Settings** > **Advanced** > **Reset SSL certificates** > **Yes**

Checking Printer's IP Address

1. Make sure printer is turned on.

2. On the HOME screen, tap the **Network** icon.

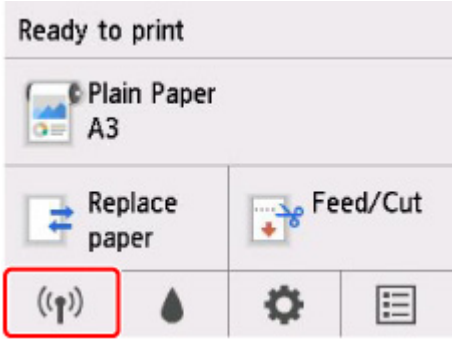

Depending on the type of LAN enabled, the icon displayed on the button may differ.

3. Tap the enabled LAN.

Diagonal lines are displayed for disabled LAN icons.

4. Flick the screen, check the value on **IPv6 link-local address**.

Write down the value on **IPv6 link-local address** for your reference when you open Remote UI and generate a server certificate.

Generating Server Certificate

1. Open web browser on your smartphone, tablet, or computer and enter the printer IP address.

   Enter as following in the URL field of the web browser.

   http://[XXXX::XXXX:XXXX:XXXX:XXXX]

   On "XXXX::XXXX:XXXX:XXXX:XXXX", enter the **IPv6 link-local address** in abbreviated form.

   The top screen of Remote UI appears.

2. Select **Log in** on Remote UI.

   Note

   - If you specify the administrator password, enter the password.

3. Select **Security**.

4. Select **SSL/TLS settings**.

5. Select **Generate key and certificate**.

6. Select **Generate self-signed cert**.

7. Specify each setting item.

   - **Signature algorithm**

     Select **SHA256**.

   - **Public key length (bits)**

     Select **2048 bits**.

   - Specify the expiration date.

     Enter the date you generated the server certificate on **Valid from**.

     Enter the date the server certificate expires on **Valid to**.

   - Enter the common name.

     On **Common name**, enter the **IPv6 link-local address** you checked in abbreviated form.

     Note

     - When you enter the common name, add [ ] to each end of the abbreviation value of the printer's IPv6 address.
     - Do not use a comma or make a space for the common name.

8. Select **Next**.

You need not enter anything on **Country**, **State or province**, **Locality**, **Organization**, or **Organizational unit**.

9. Select **Generate**.

   The server certificate starts to be generated.

   When the server certificate has been generated, **Generated a self-signed certificate.** appears.

10. Select **Restart LAN**.

    LAN will be restarted.

    When LAN has been restarted, **Printer status** on Remote UI appears.

    Note

    - If you cannot access to Remote UI after you restart LAN, reload your web browser.

Checking Generated Server Certificate

1. Select **Security** on Remote UI.

2. Select **SSL/TLS settings**.

3. Select **Check key and certificate**.

   Make sure the issuer of the root certificate is displayed on **Issuer**, and the value you entered is displayed on **Common name** on **Subject**.

Setting Mail Server

To use mail function, specify the mail server settings.

*This function may not be available depending on the country or region of purchase.

Note

- If you did not specify the time zone setting using the printer's operation panel, a message to inform you that the correct time may not be reflected on the sent e-mail appears. We recommended that you set the time zone setting using the printer's operation panel.

  For the time zone setting, see Other device settings.
- These functions can be set only when you are logged in administrator mode.

1. Start up Remote UI.

2. Select **Device settings**.

3. Select **Set mail server**.

   The setting items for mail server appear.

4. Specify mail server settings.

   Specify the following items.

   Sender address
   Enter the e-mail address of the sender (this printer).

   Outgoing mail server (SMTP)
   Enter the address of your SMTP server.

   Port number (SMTP)
   Enter the port number of your SMTP server.

   Secure connection (SSL)
   Select if you use the secure connection (SSL).

   Don't verify certificates
   Select if you do not verify the certificate.

   Authentication method
   Select one of the following authentication methods.

   SMTP authentication
   Select if you send e-mail with SMTP authentication.

   Then select **OK**, and then make the following settings.

   Outgoing account
   Enter the account name for sending to perform the authentication.

   Outgoing password
   To set / change the password for sending in order to perform the authentication, check the **Set/change password** and then enter the password.

POP before SMTP

Select if you send e-mail with POP before SMTP authentication.

Then select **OK**, and then make the following settings.

Incoming mail server (POP3)

Enter the address of your POP3 server.

Port number (POP3)

Enter the port number of your POP3 server.

Incoming account

Enter the account name for receiving to perform the authentication.

Incoming password

To set / change the password for receiving in order to perform the authentication, check the **Set/change password** and then enter the password.

Use APOP authentication

Select if you send the password by the encryption transmission.

Clear mailbox

Select if you delete the e-mails that remain in the POP3 server.

Important

- When this setting is enabled, e-mail in the Inbox on the server will have all been removed. If you specify the e-mail address of your everyday, be sure to disable this setting as unread e-mail is not deleted. We recommended that you prepare this printer dedicated e-mail account not to accidentally delete the unread e-mail.

5. Select **OK**.

The setting operation is completed.

Receiving Printer Status by E-mail

You receive the printer status information such as the remaining ink level and the error from the printer.

Note

- Specify the mail server settings in advance.

  Setting Mail Server

- If you did not specify the date and time setting using the printer's operation panel, the date and time may not be reflected on the sent e-mail. We recommended that you set the date and time setting using the printer's operation panel.

  For the date and time setting, see Other device settings.

- These functions can be set only when you are logged in administrator mode.

1. Start up Remote UI.

2. Select **Device settings**.

3. Select **Status notification e-mail**.

4. Select **Notification recipients**.

5. Specify destination settings.

   Up to 5 destinations can be registered by following the steps below.

   1. Select number of destination.

   2. Select **Add**.

   3. Enter e-mail address, and then select printer status to send information.

   4. Select **OK**.

      The registration for destination is completed.

6. Select **Device settings** > **Status notification e-mail** > **Retry settings**.

7. Specify resending settings.

   The number of resending can be specified by following the steps below.

   1. Specify number of resending.

   2. Specify interval of resending.

   3. Select **OK**.

The resending setting is completed.

Printer Parts

- **Printer Parts**
  - Front
  - Side
  - Top Cover (Inside)
  - Roll Paper Cover (Inside)
  - Carriage
  - Ink Tank Cover (Inside)
  - Stand
  - Operation Panel
- **Optional accessories**
  - Roll Holder Set
  - Stand

Printer Parts

- Front
- Side
- Top Cover (Inside)
- Roll Paper Cover (Inside)
- Carriage
- Ink Tank Cover (Inside)
- Stand
- Operation Panel

Front

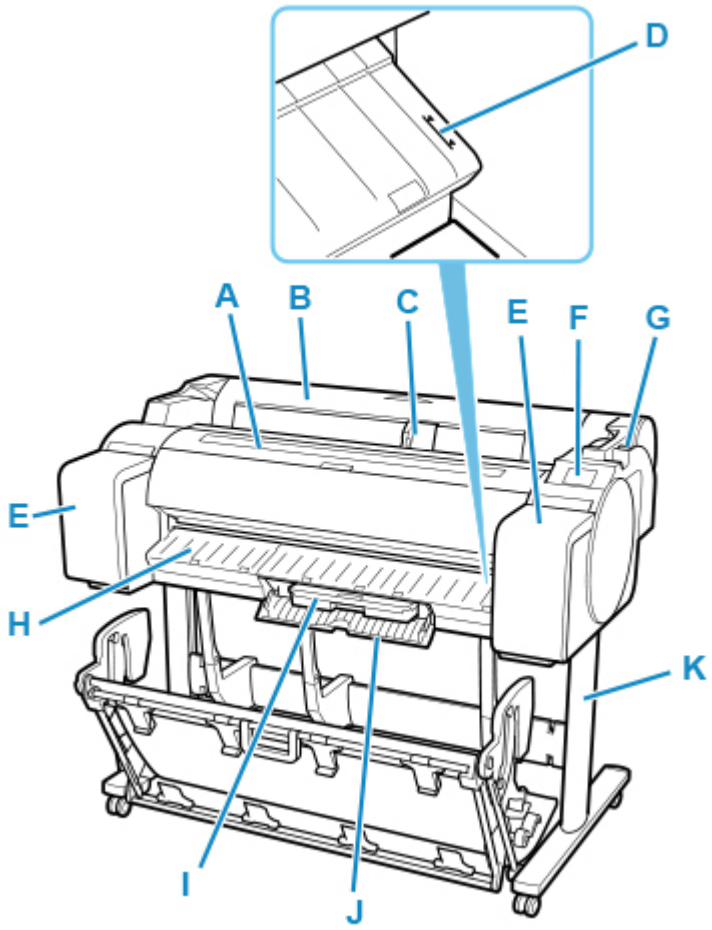

(A) Top Cover

Open this cover to install the print head and remove any jammed paper from inside the printer, as needed. (See "Top Cover (Inside).")

(B) Roll Paper Cover

Open this cover to load rolls. (See "Roll Paper Cover (Inside).")

(C) Width Guide

When loading the sheets , move the guide to match the paper size.

(D) Paper Alignment Line

A white line for alignment of paper.

(E) Ink Tank Cover

Open this cover to replace the ink tank. (See "Ink Tank Cover (Inside).")

(F) Operation Panel

Use this screen to operate the printer and check the printer status. (See "Operation Panel.")

(G) Release Lever

When releasing the Paper Retainer, push this lever back.

(H) Output Guide

Supports output paper.

(I) Maintenance Cartridge

Ink used for maintenance purposes such as head cleaning is absorbed. (Replace the cartridge when it is full.)

(J) Maintenance Cartridge Cover

Open this cover to replace the maintenance cartridge.

(K) Stand

A stand that holds the printer. Equipped with casters to facilitate moving it. (See "Stand.")

Side

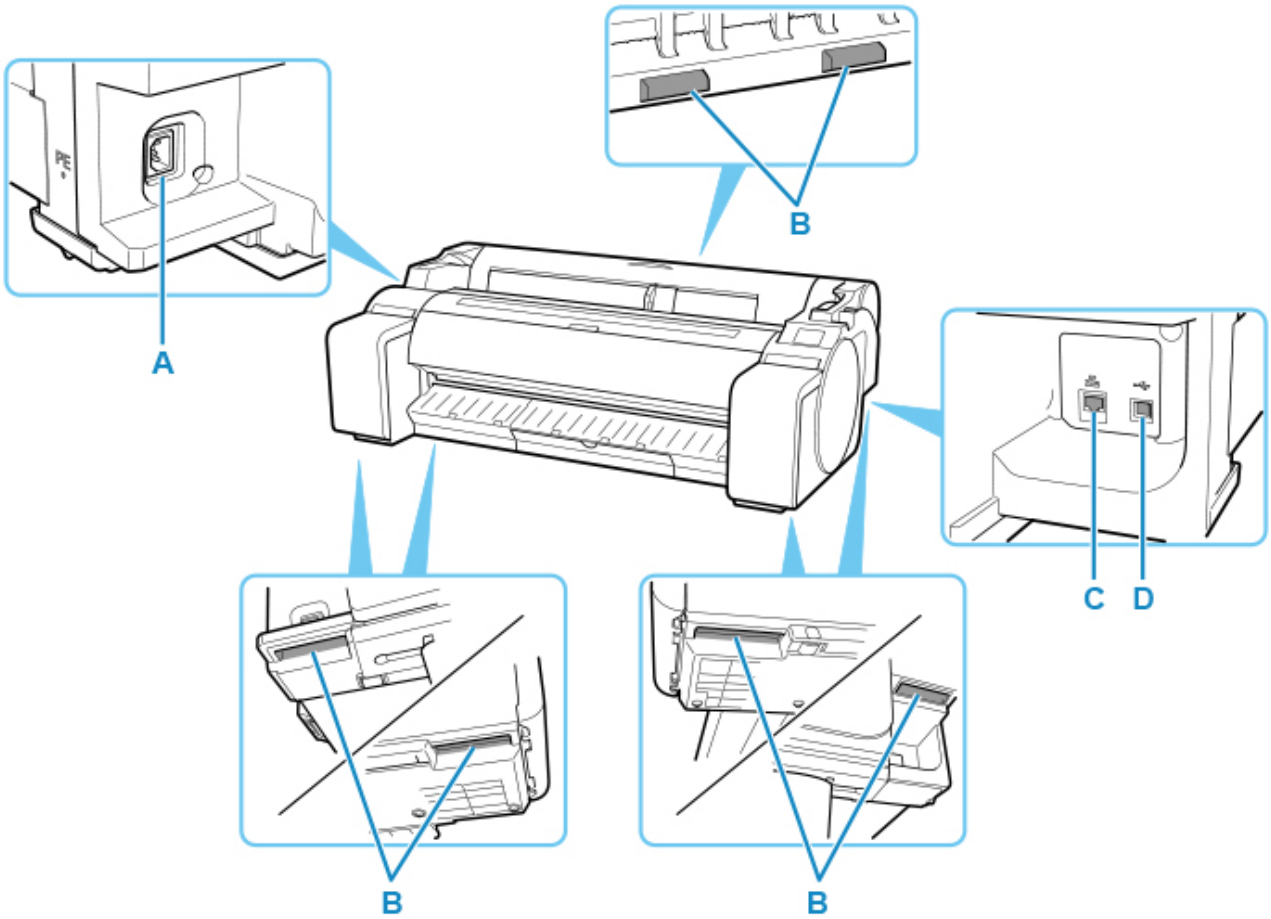

(A) Power Cord Connector

Connect the power cord to this connector.

(B) Carrying Grips

When carrying the printer, have three or more people hold it by these handles under both sides. Furthermore, hold the left and right of these parts when moving the printer with a stand.

(C) Wired LAN Connector

Connect an Ethernet cable to this port. The lamp is lit if the Ethernet cable is connected correctly and communication is possible between the computer and printer.

(D) USB Port

Connect a USB cable to this port. The printer is compatible with Hi-Speed USB connections.

Top Cover (Inside)

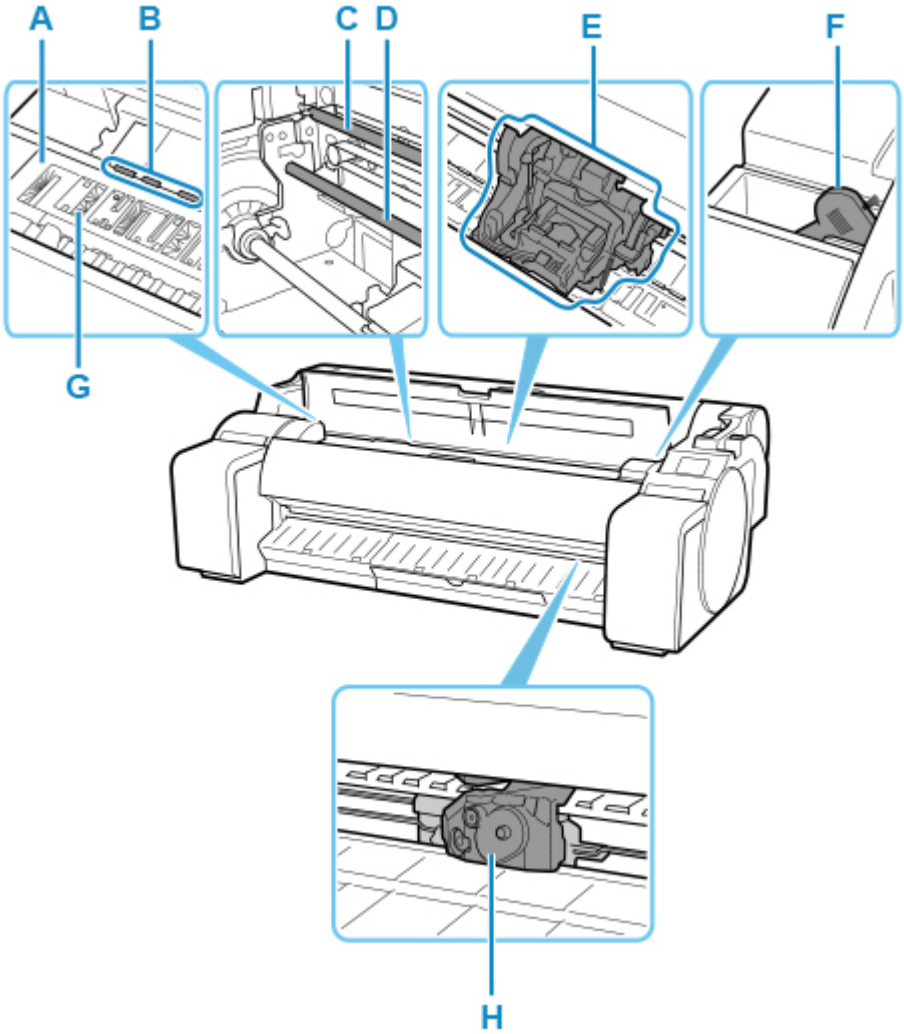

(A) Platen

The print head moves across the platen to print.

(B) Paper Retainer

Important in supplying the paper. This retainer holds paper as it is fed.

(C) Linear Scale

The linear scale serves a key role in detecting the carriage position.

(D) Carriage Shaft

The Carriage slides along this shaft.

(E) Carriage

Moves the print head. The carriage serves a key role in printing. (See "Carriage.")

(F) Cleaning Brush

When cleaning inside the printer under the top cover, use this brush to sweep away paper dust on the platen.

(G) Borderless Printing Ink Grooves

For catching ink outside the edges of paper during borderless printing.

(H) Cutter Blade

A round-bladed cutter for automatic paper cutting.

Roll Paper Cover (Inside)

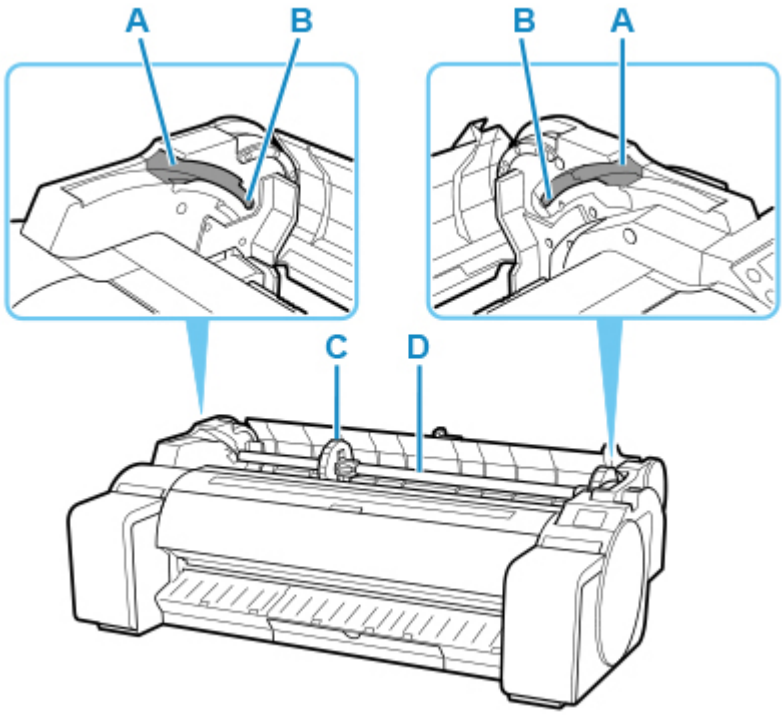

(A) Slide Guide

Move the roll holder along this guide.

(B) Roll Holder Slot

Slide the roll holder into this slot.

(C) Holder Stopper

Secure the roll on the roll holder with this part.

(D) Roll Holder

Load the roll on this holder.

Carriage

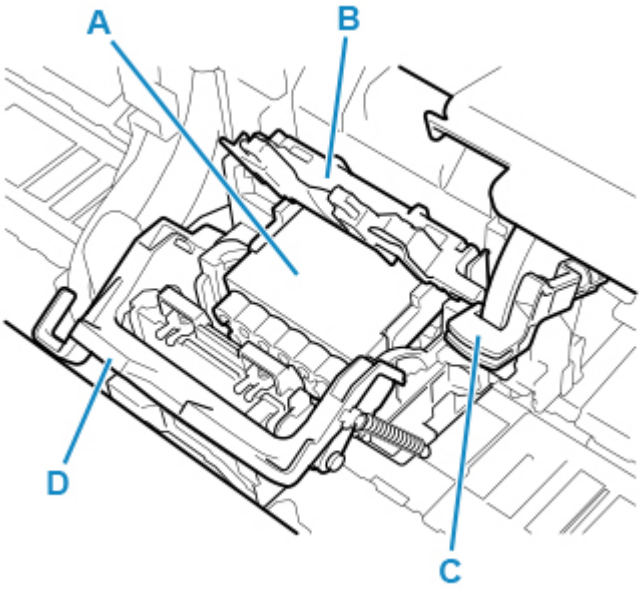

(A) Print Head

The printhead is equipped with ink nozzles. The carriage serves a key role in printing.

(B) Print Head Locking Cover

Secures the print head.

(C) Angle Adjustment Lever

Fine-tunes the line misalignment when printing.

(D) Print Head Lock Lever

Lock print head locking cover.

Ink Tank Cover (Inside)

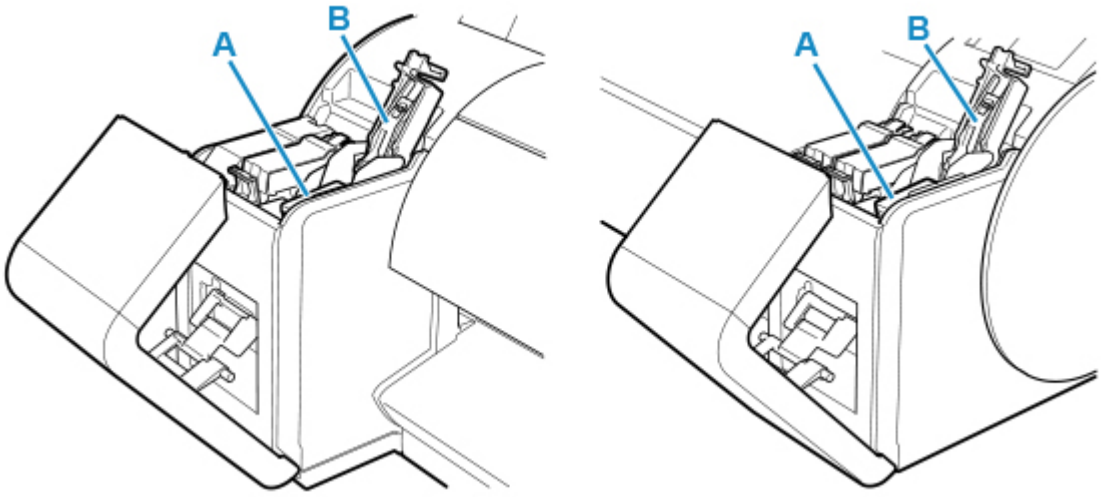

(A) Ink Tank

Cartridges of ink in various colors.

(B) Ink Tank Lock Lever

A lever that locks the ink tank in place and protects it. Lift and press down the lever when replacing an ink tank.

Stand

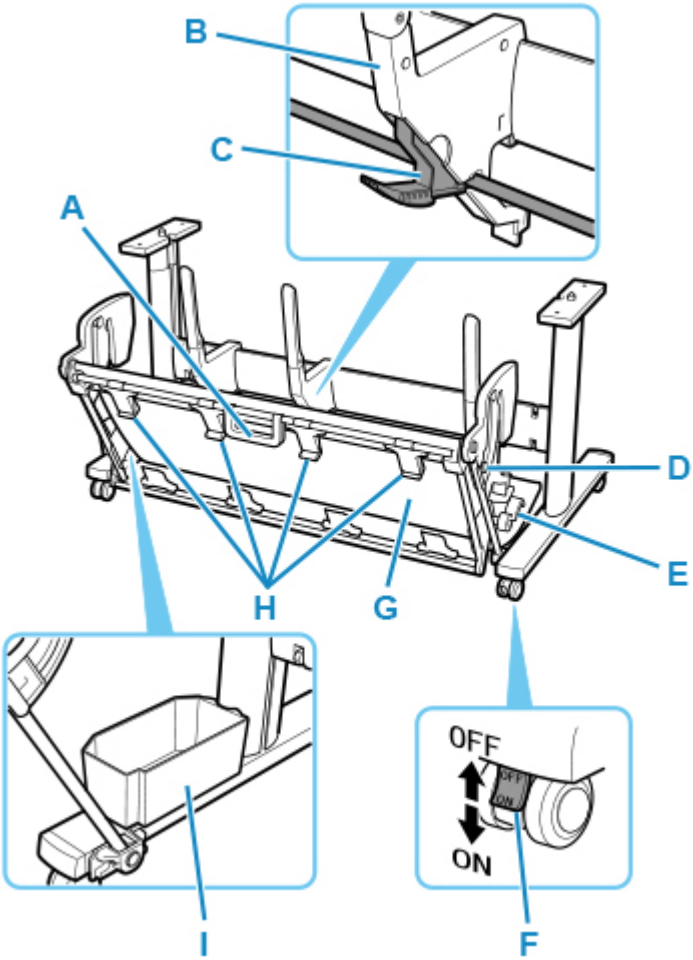

(A) Basket Handle

Hold this handle to support the sliding basket as you put the basket in its extended position B and to return it to its normal position. For details about the extended position, see "Using the Basket".

(B) Paper Guide

Guides the output printed documents to the basket.

(C) Adjustable Stopper

Extends according to the paper size when using the basket in the extended position A. For details about the extended position, see "Using the Basket".

(D) Support Rod

Can change the position when changing the position of the basket. For details about the extended position, see "Using the Basket".

(E) Basket Release Lever

Releases the basket when it is set in the extended position B and the lever is pulled forward. For details about the extended position, see "Using the Basket".

(F) Locking Caster

The casters can be locked securely. When moving the printer, be sure to unlock the 4 casters. If you move it while the locking casters are locked, the floor may become scratched.

(G) Basket

Catches the ejected printed documents.

(H) Basket Ejection Guides

This guide supports output paper when using the basket in the extended position B.

(I) Accessory Pocket

Stores the printer's accessories.

Note

- For details about the extended position, see "Using the Basket".

Optional accessories

- Roll Holder Set
- Stand

Roll Holder Set

Load a roll on the roll holder and then load the holder in the printer. The roll holder in the roll holder set RH2-35 is for use with both 2-inch and 3-inch paper cores. Use the correct attachment for the particular paper core. (See "Loading Rolls on the Roll Holder.")

- Roll holder set RH2-35
  - Roll holder (for 2- and 3-inch paper cores)

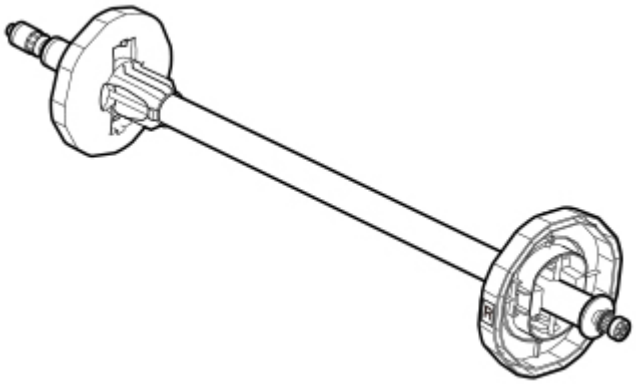

  - 3-inch paper core attachment

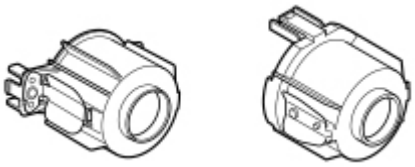

Stand

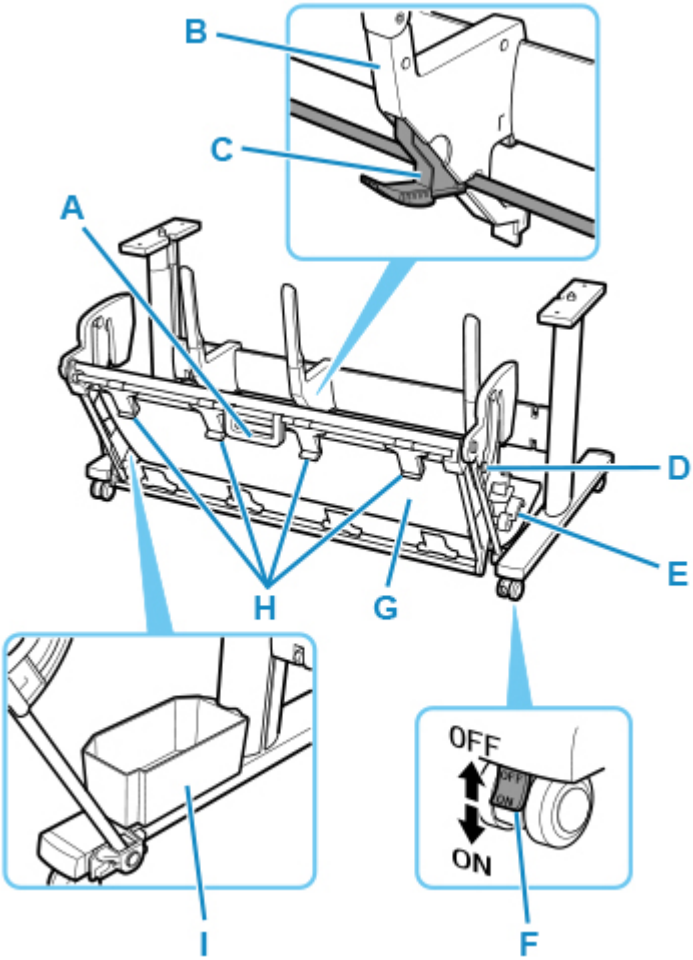

(A) Basket Handle

Hold this handle to support the sliding basket as you put the basket in its extended position B and to return it to its normal position. For details about the extended position, see "Using the Basket".

(B) Paper Guide

Guides the output printed documents to the basket.

(C) Adjustable Stopper

Extends according to the paper size when using the basket in the extended position A. For details about the extended position, see "Using the Basket".

(D) Support Rod

Can change the position when changing the position of the basket. For details about the extended position, see "Using the Basket".

(E) Basket Release Lever

Releases the basket when it is set in the extended position B and the lever is pulled forward. For details about the extended position, see "Using the Basket".

(F) Locking Caster

The casters can be locked securely. When moving the printer, be sure to unlock the 4 casters. If you move it while the locking casters are locked, the floor may become scratched.

(G) Basket

Catches the ejected printed documents.

(H) Basket Ejection Guides

This guide supports output paper when using the basket in the extended position B.

(I) Accessory Pocket

Stores the printer's accessories.

Note

- For details about the extended position, see "Using the Basket".

Network Setting

- **Network Connection Tips**
  - Printer Connection Methods
  - Default Network Settings
  - Another Printer Found with Same Name
  - Connecting to Another Computer via LAN/Changing from USB to LAN Connection
  - Printing Network Settings
  - Reconfiguration Method of LAN Connection/Reconfiguration Method of Wi-Fi Connection
  - Reconfiguration of Network Settings using the Remote UI
  - Network Status and Troubleshooting
- **IJ Network Device Setup Utility (Windows)**
  - IJ Network Device Setup Utility
  - Starting Up IJ Network Device Setup Utility
  - Diagnosing and Repairing Network Settings
  - Performing/Changing Network Settings
  - List of Models Which Does Not Support Diagnosis and Repair Function
  - Other Network Information
- **IJ Network Device Setup Utility (macOS)**
  - IJ Network Device Setup Utility
  - Starting Up IJ Network Device Setup Utility
  - Diagnosing and Repairing Network Settings
  - List of Models Which Does Not Support Diagnosis and Repair Function
  - Other Network Information
- **Sharing the Printer on a Network (Windows)**
  - Setting Up a Shared Printer

- Restrictions on Printer Sharing

- **Sharing the Printer on a Network (macOS)**
  - Settings on Print Server
  - Settings on Client PC
  - Restrictions on Printer Sharing
- **Connecting Smartphone/Tablet to Printer via Wi-Fi**
  - Connecting Smartphone/Tablet to Printer via Wireless Router

Network Connection Tips

- Printer Connection Methods
- Default Network Settings
- Another Printer Found with Same Name
- Connecting to Another Computer via LAN/Changing from USB to LAN Connection
- Printing Network Settings
- Reconfiguration Method of LAN Connection/Reconfiguration Method of Wi-Fi Connection
- Reconfiguration of Network Settings using the Remote UI
- Network Status and Troubleshooting

Printer Connection Methods

LAN or USB connection is available to connect the printer to a smartphone/tablet.

- LAN Connection:
- USB Connection:
- Another Connection Method:

LAN Connection:

Connect the printer to a smartphone/tablet via LAN.

Select one of the methods below for LAN connection.

- Connection via wired LAN

  Connect the printer and computer to a router using a LAN cable. If your router supports Wi-Fi connection, you can connect a device via Wi-Fi.

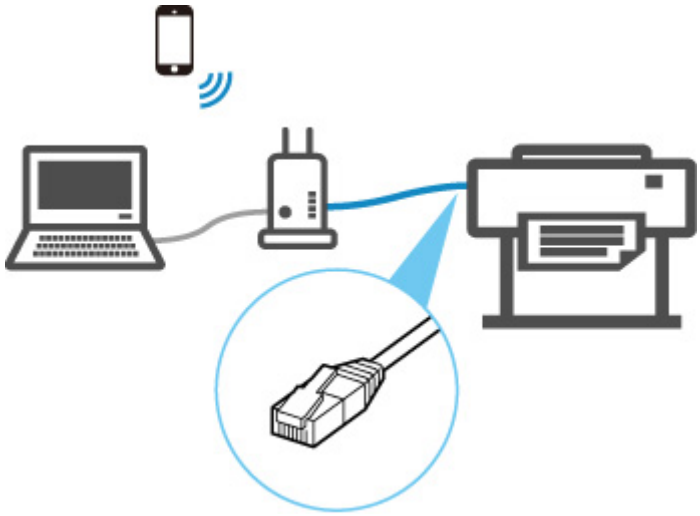

Note

- Devices connected to the router must be connected to the same network

- What Is Ethernet Cable?
- Advantages of Connecting Printer via Wired LAN
- Restrictions

- Connection via a wireless router

  Connect the printer and computer or smartphone/tablet to a wireless router via Wi-Fi.

Note

- Devices connected via Wi-Fi must be connected to the same network

Advantages of Connecting Printer over Wi-Fi

Restrictions

USB Connection:

Connect the printer to a computer using a USB cable.

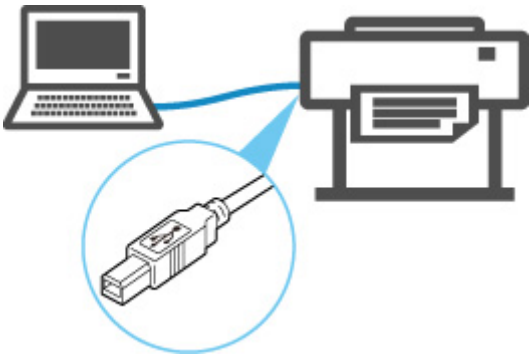

What Is USB Cable?

In USB connection, the printer is connected one-on-one to the computer.

If your computer is connected to LAN, you can use the printer with other devices by enabling the sharing setting on your computer.

Note

- You can connect the printer to a computer via USB even when the printer is already connected to another one via wired LAN.

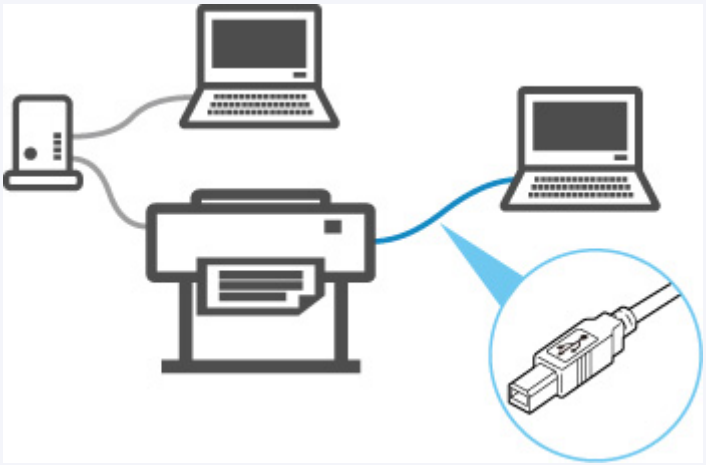

Another Connection Method:

Using Wireless Direct enables you to connect the printer directly to a computer or smartphone/tablet without a wireless router.

Default Network Settings

LAN Connection Defaults

Item	Default
Enable/Disable LAN	Wired LAN enabled
Network name (SSID)	BJNPSETUP
Communication mode	**Infrastructure**
Wi-Fi security	**Disable**
IP address (IPv4)	DHCP
IP address (IPv6)	Auto setup
Set printer name*	XXXXXXXXXXXX
Enable/disable IPv6	**Enable**
Enable/disable WSD	**Disable**
Timeout setting	**15 minutes**
Enable/disable Bonjour	**Enable**
Service name	Canon TM-300
LPR protocol setting	**Enable**
Wi-Fi DRX setting	**Enable**
Wired LAN DRX setting	**Enable**

("XX" represents alphanumeric characters.)

* Default value depends on printer. To check value, use operation panel.

LAN settings

Wireless Direct Defaults

Item	Default
Network (SSID)/device name	DIRECT-abXX-TM-300 *1
Password	YYYYYYYYYY *2
Wi-Fi security	**WPA2-PSK (AES)**
Connection request confirmation	Displayed

*1 "ab" is specified at random and "XX" represents last two digits of printer's wireless MAC address.

*2 The password is specified automatically when the printer is turned on for the first time.

Another Printer Found with Same Name

When the printer is found during setup, other printers with the same name may appear on the results screen.

Select a printer with checking the printer settings against those on detection result screen.

Check the printer's MAC address or serial to select the correct printer from the results.

Note

- Serial number may not appear on result screen.

Check the printer's MAC address and the serial number by one of the following methods.

- Display on the touch screen.

  MAC address

  LAN settings

  Serial number

  Printer information

- Print the network settings.

  Printing Network Settings

Connecting to Another Computer via LAN/Changing from USB to LAN Connection

- For Windows:
- For macOS:

For Windows:

To add a computer to connect to the printer on a LAN or to change from USB to LAN connection, perform setup using the Setup CD-ROM or from the web page.

For macOS:

To connect an additional computer to the printer via LAN, or to change from USB to LAN connection, perform setup from the web page.

Printing Network Settings

Use the operation panel to print the printer's current network settings.

Important

- The network settings printout contains important information about your network. Handle it with care.

1. Check that printer is turned on.

2. Load plain paper.

   - Loading Rolls on the Roll Holder
   - Loading Rolls in the Printer

   If you use sheets, prepare at least 10 sheets (A4 or Letter-sized).

   - Loading Sheets in the Printer

3. Select (**Setup**) icon on HOME screen.

4. Select **Device settings**.

5. Select **LAN settings**.

6. Select **Print details**.

7. Select **Yes** on displayed screen.

8. Select **Yes** or **No** on displayed screen.

   The printer starts printing network settings information.

Note

- You can also print the printer's network settings. Select the (**Setup**) icon > **Device settings** > **Test print** > **Print LAN details** > **Yes** > **Yes**.

The printed network settings information is as follows: (Some setting values are not displayed depending on the printer settings.)

Item	Description	Setting
LAN Setting	Basic setting information	-
Basic Info	IPv4 setting information (Wired LAN)	-

LAN Interface Mode	Current interface	Wired LAN/Wireless LAN(Infra)/Wireless LAN(AP)/Wireless(Wireless direct)/Disabled
Link Active	Operation status	Inactive/Active
IP Address	IPv4 IP address	XXX.XXX.XXX.XXX
Gateway Address	IPv4 default gateway	XXX.XXX.XXX.XXX
Subnet Mask	IPv4 subnet mask	XXX.XXX.XXX.XXX
IP Mode	Acquiring method of IPv4 IP address	Auto IP/DHCP/Manual
Use DNS Auto Mode	Acquiring DNS server automatically	On/Off
Primary DNS Server Address	Primary DNS server address	XXX.XXX.XXX.XXX
Secondary DNS Server Address	Secondary DNS server address	XXX.XXX.XXX.XXX
Control Filtering	SNMP filtering setting information	-
Use IP Filtering	Operation status of IP filtering	On/Off
IP Filtering Select	IP filtering method	Disabled/Enabled
IP Filtering Permission Address	IP filtering permission address	-
Start Address 1	Start address 1	XXX.XXX.XXX.XXX
End Address 1	End address 1	XXX.XXX.XXX.XXX
Use Single On 1	Use single on 1	On/Off
Start Address 2	Start address 2	XXX.XXX.XXX.XXX
End Address 2	End address 2	XXX.XXX.XXX.XXX
Use Single On 2	Use single on 2	On/Off
Start Address 3	Start address 3	XXX.XXX.XXX.XXX
End Address 3	End address 3	XXX.XXX.XXX.XXX
Use Single On 3	Use single on 3	On/Off
Start Address 4	Start address 4	XXX.XXX.XXX.XXX
End Address 4	End address 4	XXX.XXX.XXX.XXX
Use Single On 4	Use single on 4	On/Off
Start Address 5	Start address 5	XXX.XXX.XXX.XXX
End Address 5	End address 5	XXX.XXX.XXX.XXX
Use Single On 5	Use single on 5	On/Off

IP Filtering Prohibit Address	IP filtering prohibit address	-
Start Address 1	Start address 1	XXX.XXX.XXX.XXX
End Address 1	End address 1	XXX.XXX.XXX.XXX
Use Single On 1	Use single on 1	On/Off
Start Address 2	Start address 2	XXX.XXX.XXX.XXX
End Address 2	End address 2	XXX.XXX.XXX.XXX
Use Single On 2	Use single on 2	On/Off
Start Address 3	Start address 3	XXX.XXX.XXX.XXX
End Address 3	End address 3	XXX.XXX.XXX.XXX
Use Single On 3	Use single on 3	On/Off
Start Address 4	Start address 4	XXX.XXX.XXX.XXX
End Address 4	End address 4	XXX.XXX.XXX.XXX
Use Single On 4	Use single on 4	On/Off
LAN Setting	Basic setting information	-
Basic Info	IPv4 setting information (Wired LAN)	-
Control Filtering	SNMP filtering setting information	-
IP Filtering Prohibit Address	IP filtering prohibit address	-
Start Address 5	Start address 5	XXX.XXX.XXX.XXX
End Address 5	End address 5	XXX.XXX.XXX.XXX
Use Single On 5	Use single on 5	On/Off
Print Filtering	Print filtering setting information	-
Use IP Filtering	Operation status of IP filtering	On/Off
IP Filtering Select	IP filtering method	Disabled/Enabled
IP Filtering Permission Address	IP filtering permission address	-
Start Address 1	Start address 1	XXX.XXX.XXX.XXX
End Address 1	End address 1	XXX.XXX.XXX.XXX
Use Single On 1	Use single on 1	On/Off
Start Address 2	Start address 2	XXX.XXX.XXX.XXX
End Address 2	End address 2	XXX.XXX.XXX.XXX

Use Single On 2	Use single on 2	On/Off
Start Address 3	Start address 3	XXX.XXX.XXX.XXX
End Address 3	End address 3	XXX.XXX.XXX.XXX
Use Single On 3	Use single on 3	On/Off
Start Address 4	Start address 4	XXX.XXX.XXX.XXX
End Address 4	End address 4	XXX.XXX.XXX.XXX
Use Single On 4	Use single on 4	On/Off
Start Address 5	Start address 5	XXX.XXX.XXX.XXX
End Address 5	End address 5	XXX.XXX.XXX.XXX
Use Single On 5	Use single on 5	On/Off
IP Filtering Prohibit Address	IP filtering prohibit address	-
Start Address 1	Start address 1	XXX.XXX.XXX.XXX
End Address 1	End address 1	XXX.XXX.XXX.XXX
Use Single On 1	Use single on 1	On/Off
Start Address 2	Start address 2	XXX.XXX.XXX.XXX
End Address 2	End address 2	XXX.XXX.XXX.XXX
Use Single On 2	Use single on 2	On/Off
Start Address 3	Start address 3	XXX.XXX.XXX.XXX
End Address 3	End address 3	XXX.XXX.XXX.XXX
Use Single On 3	Use single on 3	On/Off
Start Address 4	Start address 4	XXX.XXX.XXX.XXX
End Address 4	End address 4	XXX.XXX.XXX.XXX
Use Single On 4	Use single on 4	On/Off
Start Address 5	Start address 5	XXX.XXX.XXX.XXX
End Address 5	End address 5	XXX.XXX.XXX.XXX
Use Single On 5	Use single on 5	On/Off
LAN Setting	Basic setting information	-
IPv6 Info	IPv6 setting information (Wired LAN)	-
Link Local Address	Link local address	-

IP Address	IPv6 IP address	XXXX:XXXX:XXXX:XXXX XXXX:XXXX:XXXX:XXXX
Prefix Length	Link local address prefix length	XXX (0 to 128)
Use Manual Mode	Operation status of IPv6 manual address	On/Off
Manual Address	Manual address	-
IP Address	IPv6 IP address	XXXX:XXXX:XXXX:XXXX XXXX:XXXX:XXXX:XXXX
Prefix Length	Prefix length	XXX (0 to 128)
Use Stateful Address Mode	Operation status of stateful address mode	On/Off
Stateful Address	Stateful address	-
IP Address	IPv6 IP address	XXXX:XXXX:XXXX:XXXX XXXX:XXXX:XXXX:XXXX
Prefix Length	Prefix length	XXX (0 to 128)
Stateless Address	Stateless address	-
IP Address 1	IP address 1	XXXX:XXXX:XXXX:XXXX XXXX:XXXX:XXXX:XXXX
Prefix Length 1	Prefix length 1	XXX (0 to 128)
IP Address 2	IP address 2	XXXX:XXXX:XXXX:XXXX XXXX:XXXX:XXXX:XXXX
Prefix Length 2	Prefix length 2	XXX (0 to 128)
IP Address 3	IP address 3	XXXX:XXXX:XXXX:XXXX XXXX:XXXX:XXXX:XXXX
Prefix Length 3	Prefix length 3	XXX (0 to 128)
IP Address 4	IP address 4	XXXX:XXXX:XXXX:XXXX XXXX:XXXX:XXXX:XXXX
Prefix Length 4	Prefix length 4	XXX (0 to 128)
Gateway Address	Gateway address	-
IP Address 1	IP address 1	XXXX:XXXX:XXXX:XXXX XXXX:XXXX:XXXX:XXXX
Prefix Length 1	Prefix length 1	XXX (0 to 128)
IP Address 2	IP address 2	XXXX:XXXX:XXXX:XXXX

		XXXX:XXXX:XXXX:XXXX
Prefix Length 2	Prefix length 2	XXX (0 to 128)
IP Address 3	IP address 3	XXXX:XXXX:XXXX:XXXX XXXX:XXXX:XXXX:XXXX
Prefix Length 3	Prefix length 3	XXX (0 to 128)
IP Address 4	IP address 4	XXXX:XXXX:XXXX:XXXX XXXX:XXXX:XXXX:XXXX
Prefix Length 4	Prefix length 4	XXX (0 to 128)
Use DNS Auto Mode	Acquiring DNS server automatically	On/Off
Primary DNS Server Address	Primary DNS server address	XXXX:XXXX:XXXX:XXXX XXXX:XXXX:XXXX:XXXX
Secondary DNS Server Address	Secondary DNS server address	XXXX:XXXX:XXXX:XXXX XXXX:XXXX:XXXX:XXXX
Control Filtering	SNMP filtering setting information	-
Use IP Filtering	Operation status of IP filtering	On/Off
IP Filtering Select	IP filtering method	Disabled/Enabled
IPv6 Filtering Permission Info	IPv6 filtering permission information	-
IP Filtering Start Address 1	IP filtering start address 1	XXXX:XXXX:XXXX:XXXX XXXX:XXXX:XXXX:XXXX
IP Filtering End Address 1	IP filtering end address 1	XXXX:XXXX:XXXX:XXXX XXXX:XXXX:XXXX:XXXX
Use Single On 1	Use single on 1	On/Off
LAN Setting	Basic setting information	-
IPv6 Info	IPv6 setting information (Wired LAN)	-
Control Filtering	SNMP filtering setting information	-
IP Filtering Start Address 2	IP filtering start address 2	XXXX:XXXX:XXXX:XXXX XXXX:XXXX:XXXX:XXXX
IP Filtering End Address 2	IP filtering end address 2	XXXX:XXXX:XXXX:XXXX XXXX:XXXX:XXXX:XXXX
Use Single On 2	Use single on 2	On/Off
IP Filtering Start Address 3	IP filtering start address 3	XXXX:XXXX:XXXX:XXXX

		XXXX:XXXX:XXXX:XXXX
IP Filtering End Address 3	IP filtering end address 3	XXXX:XXXX:XXXX:XXXX XXXX:XXXX:XXXX:XXXX
Use Single On 3	Use single on 3	On/Off
IP Filtering Start Address 4	IP filtering start address 4	XXXX:XXXX:XXXX:XXXX XXXX:XXXX:XXXX:XXXX
IP Filtering End Address 4	IP filtering end address 4	XXXX:XXXX:XXXX:XXXX XXXX:XXXX:XXXX:XXXX
Use Single On 4	Use single on 4	On/Off
IP Filtering Start Address 5	IP filtering start address 5	XXXX:XXXX:XXXX:XXXX XXXX:XXXX:XXXX:XXXX
IP Filtering End Address 5	IP filtering end address 5	XXXX:XXXX:XXXX:XXXX XXXX:XXXX:XXXX:XXXX
Use Single On 5	Use single on 5	On/Off
IPv6 Filtering Prohibit Info	IPv6 Filtering prohibit information	-
IP Filtering Start Address 1	IP filtering start address 1	XXXX:XXXX:XXXX:XXXX XXXX:XXXX:XXXX:XXXX
IP Filtering End Address 1	IP filtering end address 1	XXXX:XXXX:XXXX:XXXX XXXX:XXXX:XXXX:XXXX
Use Single On 1	Use single on 1	On/Off
IP Filtering Start Address 2	IP filtering start address 2	XXXX:XXXX:XXXX:XXXX XXXX:XXXX:XXXX:XXXX
IP Filtering End Address 2	IP filtering end address 2	XXXX:XXXX:XXXX:XXXX XXXX:XXXX:XXXX:XXXX
Use Single On 2	Use single on 2	On/Off
IP Filtering Start Address 3	IP filtering start address 3	XXXX:XXXX:XXXX:XXXX XXXX:XXXX:XXXX:XXXX
IP Filtering End Address 3	IP filtering end address 3	XXXX:XXXX:XXXX:XXXX XXXX:XXXX:XXXX:XXXX
Use Single On 3	Use single on 3	On/Off
IP Filtering Start Address 4	IP filtering start address 4	XXXX:XXXX:XXXX:XXXX XXXX:XXXX:XXXX:XXXX

IP Filtering End Address 4	IP filtering end address 4	XXXX:XXXX:XXXX:XXXX XXXX:XXXX:XXXX:XXXX
Use Single On 4	Use single on 4	On/Off
IP Filtering Start Address 5	IP filtering start address 5	XXXX:XXXX:XXXX:XXXX XXXX:XXXX:XXXX:XXXX
IP Filtering End Address 5	IP filtering end address 5	XXXX:XXXX:XXXX:XXXX XXXX:XXXX:XXXX:XXXX
Use Single On 5	Use single on 5	On/Off
Print Filtering	Print filtering setting information	-
Use IP Filtering	Operation status of IP filtering	On/Off
IP Filtering Select	IP filtering method	Disabled/Enabled
IP Filtering Permission Info	IP filtering permission information	-
IP Filtering Start Address 1	IP filtering start address 1	XXXX:XXXX:XXXX:XXXX XXXX:XXXX:XXXX:XXXX
IP Filtering End Address 1	IP filtering end address 1	XXXX:XXXX:XXXX:XXXX XXXX:XXXX:XXXX:XXXX
Use Single On 1	Use single on 1	On/Off
IP Filtering Start Address 2	IP filtering start address 2	XXXX:XXXX:XXXX:XXXX XXXX:XXXX:XXXX:XXXX
IP Filtering End Address 2	IP filtering end address 2	XXXX:XXXX:XXXX:XXXX XXXX:XXXX:XXXX:XXXX
Use Single On 2	Use single on 2	On/Off
LAN Setting	Basic setting information	-
IPv6 Info	IPv6 setting information (Wired LAN)	-
Print Filtering	Print filtering setting information	-
IP Filtering Start Address 3	IP filtering start address 3	XXXX:XXXX:XXXX:XXXX XXXX:XXXX:XXXX:XXXX
IP Filtering End Address 3	IP filtering end address 3	XXXX:XXXX:XXXX:XXXX XXXX:XXXX:XXXX:XXXX
Use Single On 3	Use single on 3	On/Off
IP Filtering Start Address 4	IP filtering start address 4	XXXX:XXXX:XXXX:XXXX XXXX:XXXX:XXXX:XXXX

IP Filtering End Address 4	IP filtering end address 4	XXXX:XXXX:XXXX:XXXX XXXX:XXXX:XXXX:XXXX
Use Single On 4	Use single on 4	On/Off
IP Filtering Start Address 5	IP filtering start address 5	XXXX:XXXX:XXXX:XXXX XXXX:XXXX:XXXX:XXXX
IP Filtering End Address 5	IP filtering end address 5	XXXX:XXXX:XXXX:XXXX XXXX:XXXX:XXXX:XXXX
Use Single On 5	Use single on 5	On/Off
IPv6 Filtering Prohibit Info	IPv6 Filtering prohibit information	-
IP Filtering Start Address 1	IP filtering start address 1	XXXX:XXXX:XXXX:XXXX XXXX:XXXX:XXXX:XXXX
IP Filtering End Address 1	IP filtering end address 1	XXXX:XXXX:XXXX:XXXX XXXX:XXXX:XXXX:XXXX
Use Single On 1	Use single on 1	On/Off
IP Filtering Start Address 2	IP filtering start address 2	XXXX:XXXX:XXXX:XXXX XXXX:XXXX:XXXX:XXXX
IP Filtering End Address 2	IP filtering end address 2	XXXX:XXXX:XXXX:XXXX XXXX:XXXX:XXXX:XXXX
Use Single On 2	Use single on 2	On/Off
IP Filtering Start Address 3	IP filtering start address 3	XXXX:XXXX:XXXX:XXXX XXXX:XXXX:XXXX:XXXX
IP Filtering End Address 3	IP filtering end address 3	XXXX:XXXX:XXXX:XXXX XXXX:XXXX:XXXX:XXXX
Use Single On 3	Use single on 3	On/Off
IP Filtering Start Address 4	IP filtering start address 4	XXXX:XXXX:XXXX:XXXX XXXX:XXXX:XXXX:XXXX
IP Filtering End Address 4	IP filtering end address 4	XXXX:XXXX:XXXX:XXXX XXXX:XXXX:XXXX:XXXX
Use Single On 4	Use single on 4	On/Off
IP Filtering Start Address 5	IP filtering start address 5	XXXX:XXXX:XXXX:XXXX XXXX:XXXX:XXXX:XXXX
IP Filtering End Address 5	IP filtering end address 5	XXXX:XXXX:XXXX:XXXX

		XXXX:XXXX:XXXX:XXXX
Use Single On 5	Use single on 5	On/Off
MAC Info	MAC address setting information (Wired/Wi-Fi)	-
MAC Address(Wired)	MAC address (Wired LAN)	XX:XX:XX:XX:XX:XX
MAC Address(Wireless)	MAC address (Wi-Fi)	XX:XX:XX:XX:XX:XX
Use MAC Address Filtering	Operation status of MAC address filtering	On/Off
MAC Filtering Select	MAC address filtering method	Disabled/Enabled
MAC Filtering Permission Info	MAC filtering permission information	-
MAC Address 1	MAC address 1	XX:XX:XX:XX:XX:XX
MAC Address 2	MAC address 2	XX:XX:XX:XX:XX:XX
MAC Address 3	MAC address 3	XX:XX:XX:XX:XX:XX
MAC Address 4	MAC address 4	XX:XX:XX:XX:XX:XX
MAC Address 5	MAC address 5	XX:XX:XX:XX:XX:XX
LAN Setting	Basic setting information	-
MAC Info	MAC address setting information (Wired/Wi-Fi)	-
MAC Filtering Prohibit Info	MAC filtering prohibit information	-
MAC Address 1	MAC address 1	XX:XX:XX:XX:XX:XX
MAC Address 2	MAC address 2	XX:XX:XX:XX:XX:XX
MAC Address 3	MAC address 3	XX:XX:XX:XX:XX:XX
MAC Address 4	MAC address 4	XX:XX:XX:XX:XX:XX
MAC Address 5	MAC address 5	XX:XX:XX:XX:XX:XX
Proxy Setting	Proxy server setting information	-
Use Proxy	Use proxy server	On/Off
Proxy Server Address	Proxy server address	XXXXXXXXXXXXXXXX (up to 128 characters)
Proxy Port Number	Proxy port specification	1 to 65535
Use User Authority Mode	Use user authority mode	On/Off
Proxy Server User Name	Proxy server user name	XXXXXXXXXXXXXXXX (up to 64 characters)

Wireless LAN Setting	Wi-Fi setting information	-
Channel	Channel (infrastructure)	XXX (0 to 255)
SSID	SSID	Wi-Fi (infrastructure) SSID (up to 32 characters)
Security Type	Security type for Wi-Fi (infrastructure)	Disabled/WEP 64bit/WEP 128bit/WPA PSK TKIP/WPA PSK AES/WPA2 PSK TKIP/WPA2 PSK AES/MIXED
WEP1	WEP key 1 for Wi-Fi (infrastructure)	XXXXXXXX (up to 32 characters)
WEP2	WEP key 2 for Wi-Fi (infrastructure)	XXXXXXXX (up to 32 characters)
WEP3	WEP key 3 for Wi-Fi (infrastructure)	XXXXXXXX (up to 32 characters)
WEP4	WEP key 4 for Wi-Fi (infrastructure)	XXXXXXXX (up to 32 characters)
WEP Certificate	WEP certificate for Wi-Fi (infrastructure)	Open/Shared/Auto
WEP Format	WEP format for Wi-Fi (infrastructure)	Hex/String
Direct Connection Setting	Wireless direct setting information	-
Device Name	Wireless direct device name	Wireless direct device name (up to 32 characters)
Channel	Channel (Wireless direct)	XXX (0 to 255)
SSID	SSID	Wireless direct network name (SSID)(up to 32 characters)
Security Type	Security type for Wi-Fi (Wireless direct)	Disabled/WPA2 PSK TKIP/WPA2 PSK AES
WSD Setting	WSD setting information	-
Use WSD	Use WSD	On/Off
WSD Timeout	Timeout	1/5/10/15/20 [min]
Use WSD Rx Optimization	Use WSD reception optimization	On/Off
Protocol Setting	Protocol setting information	-
Printer Name	Printer name	XXXXXXXX (up to 16 characters)
Use LPR	Use LPR	On/Off
Use Wired DRX	Discontinuous reception (Wired LAN)	On/Off
Use Wireless DRX	Discontinuous reception (Wi-Fi)	On/Off
Use RAW	Use RAW	On/Off
Use LLMNR	Use LLMNR	On/Off

Use Spanning Tree	Use spanning tree	On/Off
Use Dedicated Port	Dedicated port setting	On/Off
SNMP Setting	SNMP setting information	-
Use SNMPv1	Use SNMPv1	On/Off
Use SNMPv3	Use SNMPv3	On/Off
SNMP Community Name1	SNMPv1 community name 1	XXXXXXXX (up to 32 characters)
SNMP Community Name2	SNMPv1 community name 2	XXXXXXXX (up to 32 characters)
SNMP Extra Access Authority	SNMPv1 extra access authority	Disable/Read Only/Read Write
SNMP Access Authority1	SNMPv1 community1/2 access authority	Read Only/Read Write
SNMP Access Authority2	SNMPv1 community1/2 access authority	Disable/Read Only/Read Write
SNMPv3 Setting	SNMPv3 setting information	-
User1	User 1	-
User Name	User name	XXXXXXXX (up to 32 characters)
Use SNMPv3	Use SNMPv3	On/Off
MIB Access Restriction	MIB access restriction	Read Only/Read Write
Security Setting	Security setting	No Auth No Priv/Auth No Priv/Auto Priv
Authority Algorithm	Authority algorithm	Null/MD5/SHA1
Encryption Algorithm	Encryption algorithm	Null/AES/DES
User2	User 2	-
User Name	User name	XXXXXXXX (up to 32 characters)
Use SNMPv3	Use SNMPv3	On/Off
MIB Access Restriction	MIB access restriction	Read Only/Read Write
Security Setting	Security setting	No Auth No Priv/Auth No Priv/Auto Priv
Authority Algorithm	Authority algorithm	Null/MD5/SHA1
Encryption Algorithm	Encryption algorithm	Null/AES/DES
User3	User 3	-
User Name	User name	XXXXXXXX (up to 32 characters)
Use SNMPv3	Use SNMPv3	On/Off
MIB Access Restriction	MIB access restriction	Read Only/Read Write

Security Setting	Security setting	No Auth No Priv/Auth No Priv/Auto Priv
Authority Algorithm	Authority algorithm	Null/MD5/SHA1
Encryption Algorithm	Encryption algorithm	Null/AES/DES
User4	User 4	-
User Name	User name	XXXXXXXX (up to 32 characters)
Use SNMPv3	Use SNMPv3	On/Off
MIB Access Restriction	MIB access restriction	Read Only/Read Write
Security Setting	Security setting	No Auth No Priv/Auth No Priv/Auto Priv
Authority Algorithm	Authority algorithm	Null/MD5/SHA1
Encryption Algorithm	Encryption algorithm	Null/AES/DES
User5	User 5	-
User Name	User name	XXXXXXXX (up to 32 characters)
Use SNMPv3	Use SNMPv3	On/Off
MIB Access Restriction	MIB access restriction	Read Only/Read Write
Security Setting	Security setting	No Auth No Priv/Auth No Priv/Auto Priv
Authority Algorithm	Authority algorithm	Null/MD5/SHA1
Encryption Algorithm	Encryption algorithm	Null/AES/DES
Dynamic DNS Setting	Dynamic DNS setting	-
IPv4	IPv4	-
Use Dynamic DNS	Operation status of Dynamic DNS	On/Off
Host Name	Host name	XXXXXXXX (up to 64 characters)
Domain Name	Domain name	XXXXXXXX (up to 65 characters)
IPv6	IPv6	-
Use Manual Address	DNS dynamic setting of manual address	On/Off
Use Stateless Address	DNS dynamic setting of stateless address	On/Off
Use Stateful Address	DNS dynamic setting of stateful address	On/Off
Use Name As IPv4	Use same host name/domain name as that used for IPv4	On/Off
Host Name	Host name	XXXXXXXX (up to 64 characters)
Domain Name	Domain name	XXXXXXXX (up to 65 characters)

SNTP Setting	SNTP setting information	-
Use SNTP	Use SNTP	On/Off
SNTP Polling Interval	SNTP polling interval	1 to 48 [sec]
SNTP Server Name	SNTP server name	XXXXXXXX (up to 256 characters)
FTP Setting	FTP setting information	-
Use FTP	Use FTP	On/Off
Use FTP Authority	Use FTP authority	On/Off
FTP User Name	FTP user name	XXXXXXXX (up to 33 characters)
Bonjour Setting	Bonjour setting information	-
Use Bonjour	Use Bonjour	On/Off
Bonjour Service Name	Bonjour service name	Bonjour service name (Up to 50 alphanu-meric characters)
802.1X Setting	802.1X setting information	-
Authority Type	Enable/disable 802.1X and authority type	Do not use/EAP-TLS/EAP-TTLS/PEAP
EAP TTLS Type	Internal authority type for EAP-TTLS	MSCHAPv2/PAP
Weak Encryption Restriction	Weak encryption restriction	Do not restrict/Restrict
Weak Certificate Restriction	Weak certificate restriction	Do not restrict/Restrict
Login Name	Login name	XXXXXXXX (up to 24 characters)
User Name	User name	XXXXXXXX (up to 24 characters)
Server Name	Server name	XXXXXXXX (up to 43 characters)
IPsec Setting	IPsec setting information	-
Use IPsec	Use IPsec	On/Off
Previous Shared Key	Previous shared key for IPsec	XXXXXXXX (up to 17 characters)
Phase2 Protocol	IPsec phase2 protocol	AH/ESP/AH+ESP
IPP Setting	IPP confirmation setting	-
Use IPP	Use IPP	On/Off
Use IPP Authority	Use IPP authority	On/Off
IPP User Setting	IPP confirmation user setting	-
User1	User 1	-
User Name	User name	XXXXXXXX (up to 32 characters)

User2	User 2	-
User Name	User name	XXXXXXXX (up to 32 characters)
User3	User 3	-
User Name	User name	XXXXXXXX (up to 32 characters)
User4	User 4	-
User Name	User name	XXXXXXXX (up to 32 characters)
User5	User 5	-
User Name	User name	XXXXXXXX (up to 32 characters)
User6	User 6	-
User Name	User name	XXXXXXXX (up to 32 characters)
User7	User 7	-
User Name	User name	XXXXXXXX (up to 32 characters)
User8	User 8	-
User Name	User name	XXXXXXXX (up to 32 characters)
User9	User 9	-
User Name	User name	XXXXXXXX (up to 32 characters)
User10	User 10	-
User Name	User name	XXXXXXXX (up to 32 characters)
Email Setting	E-mail setting information	-
Retry Count	E-mail retry count	0 to 5
Retry Interval	E-mail retry interval	1 to 60 (min)
Use Email Notification	Use E-mail notification	On/Off
Use SSL	Use SSL	On/Off
Use SSL Cert No Check	Use SSL certification	On/Off
Use Mailbox Delete	Use mailbox delete	On/Off
SMTP Server Address	SMTP server address	XXXXXXXX (up to 256 characters)
SMTP Server Port No	SMTP server port number	1 to 65535
SMTP State	SMTP state	Invalid/Authorized/POP before SMTP
From Address	From address	XXXXXXXX (up to 128 characters)

To Address 1	To address 1	XXXXXXXX (up to 128 characters)
Reply Address 1	Reply address 1	XXXXXXXX (up to 128 characters)
Notice Conditions 1	Notice conditions 1	-
Job End	Job end	On/Off
Error Occurred	Error occurred	On/Off
Warning Occurred	Warning occurred	On/Off
Signature 1	Signature 1	XXXXXXXX (up to 128 characters)
To Address 2	To address 2	XXXXXXXX (up to 128 characters)
Reply Address 2	Reply address 2	XXXXXXXX (up to 128 characters)
Notice Conditions 2	Notice conditions 2	-
Job End	Job end	On/Off
Error Occurred	Error occurred	On/Off
Warning Occurred	Warning occurred	On/Off
Signature 2	Signature 2	XXXXXXXX (up to 128 characters)
RUI Setting	Remote UI setting information	-
Use RUI	Use Remote UI	On/Off

("XX" represents alphanumeric characters.)

Reconfiguration Method of LAN Connection/Reconfiguration Method of Wi-Fi Connection

- Changing LAN Connection Method
- Changing Wireless LAN Connection Method

Changing LAN Connection Method

Follow either procedure below to change LAN connection method (wired or wireless).

- **For Windows:**
  - Redo setup using the Setup CD-ROM or from the web page.
  - Select **Enable** for **Enable/disable Wired LAN** or **Enable/disable Wi-Fi** in the touch screen menu.

    After that, perform settings on the **Network Settings** screen on IJ Network Device Setup Utility.

    For details, refer to Performing/Changing Wi-Fi Settings or Performing/Changing Wired LAN Connection (Ethernet Cable) Settings.
- **For macOS:**

  Redo setup from the web page.

Changing Wi-Fi Connection Method

Follow either procedure below to change Wi-Fi connection method (infrastructure or wireless direct).

- **For Windows:**
  - Redo setup using the Setup CD-ROM or from the web page.
  - Perform settings on the **Network Settings** screen on IJ Network Device Setup Utility.

Important

- Before you perform settings using IJ Network Device Setup Utility, change the printer settings following the procedure below.

  1. Check that printer is turned on.
  2. Select (**Network status**) icon.

     Menu Operations

     If you specify the administrator password, enter the password.
  3. Select **Wi-Fi**.
  4. Select **Settings**.

5. Select **Wi-Fi setup**.

6. Select **Easy wireless connect**.

7. Check message and select **OK**.

   Follow instructions on your smartphone or tablet.

8. If message saying setup is completed appears, select **OK**.

- **For macOS:**

  Redo setup from the web page.

Reconfiguration of Network Settings using the Remote UI

You can use Remote UI on the following OS and the web browser.

- iOS device

  OS: iOS 9.0 or later

  Web browser: iOS standard Web browser (Mobile Safari)

- Android device

  OS: Android 4.4 or later

  Web browser: Android standard Web browser (Browser or Chrome)

- macOS device

  OS: Mac OS X v10.9 or later

  Web browser: Safari 7.0 or later

- Windows device

  OS: Windows 7 SP1 or later

  Web browser: Internet Explorer 11 or later, Google Chrome, Mozilla Firefox

For more on Remote UI, refer to Configuration Changes Using Web Browser.

Important

- Enable JavaScript and cookies in the web browser.
- If you access Remote UI with the printer name instead of its IP address, make sure the DNS settings are correctly configured.
- Depending on the network environment, you may not be able to start Remote UI.
- On the HOME screen, select (**Setup**) > **Device settings** > **Other device settings** > **Operation restrictions** >, and then make sure **Do not restrict** is selected for **Remote UI**.

Note

- Remote UI also offers many other features. You can display the ink levels, check error messages and other status information, and cancel print jobs.

Network Status and Troubleshooting

Check the network status referring to LAN setting information on the touch screen.

Confirm LAN settings

Network Status	What to Do
Connected normally. If you are unable to print, see 1 on What to Do.	1. If you are unable to print, check the items below: • whether the computer is connected to Wi-Fi • whether the firewall of your security software is enabled • whether a privacy separator, SSID separator, or Network separation function is enabled on your wireless router If one of the above is enabled, disable it before setup. • whether the SSID of the printer (see "3-2-6" of network setting information printout) matches that of the router to connect 2. To change the network connection method (wired/wireless), change it on the printer's network setting screen.
LAN is disabled on the printer.	Perform printer setup following the instructions of the manual.
Wired LAN connection is disabled.	• Make sure the printer is connected to the router with the LAN cable. If the LAN cable is loose, connect the cable properly. If the LAN cable is connected to the WAN side of the router, connect the cable to the LAN side of the router. • Make sure the network devices (e.g. hub or router) are turned on.
IP address is not assigned.	• If you specify the printer's IP address automatically, enable DHCP on the router. • If you specify the printer's IP address manually, the address is disabled because it is out of the valid range. You specified (0.0.0.0) as the IP address, for example. Specify the valid IP address.
The default gateway is not specified.	Check the items below to communicate by hopping routers (e.g. using a cloud application). • If you specify the printer's IP address manually, make sure the correct default gateway address is specified for the printer manually. • Make sure the device specified as the default gateway is turned on. • Specify the default gateway address correctly. To check the default gateway, print out the network settings information. **Note** • For some printers, you can check the default gateway on the operation panel.
Cannot connect to the specified network.	Check the status of the printer, network devices (e.g. wireless router), or smartphone/tablet. • If they are turned off, turn them on. • Make sure wireless signal is strong. Monitor signal status and move the printer and wireless router as necessary. • The security key specified for the wireless router may not match that you entered.

	The security key is case-sensitive. Enter the correct security key.
The number of connected clients reaches the upper limit. Make sure wireless signal is strong.	• Make sure the printer is not placed too far away from the wireless router. • Wireless Direct does not allow more than 5 devices to be connected. If you add a device to connect, disconnect a device you do not use before adding the device.
A link local address is assigned.	• Perform printer setup again. • The security key specified for the wireless router may not match that you entered. The security key is case-sensitive. Enter the correct security key.
The specified SSID is left default value.	The SSID is not specified. Enter the SSID specified for the destination.

IJ Network Device Setup Utility (macOS)

- IJ Network Device Setup Utility
- Starting Up IJ Network Device Setup Utility
- Diagnosing and Repairing Network Settings
- List of Models Which Does Not Support Diagnosis and Repair Function

IJ Network Device Setup Utility

If anything is wrong with connection, IJ Network Device Setup Utility diagnoses the settings of the printer and those of computer on which it is installed. In addition, IJ Network Device Setup Utility restores the status of the printer and computer.

Important

- To use the printer over LAN, make sure you have the equipment necessary for the connection type, such as a wireless router or a LAN cable.
- When you install IJ Network Device Setup Utility, disable block function of firewall.

Starting Up IJ Network Device Setup Utility

Start up **Launchpad**, select **Canon Utilities**, and then select IJ Network Device Setup Utility.

When you start up IJ Network Device Setup Utility, the screen below appears.

Enter the password specified for your computer and select **Install Helper**. IJ Network Device Setup Utility starts diagnosis and repair of network.

- Diagnosing and Repairing Network Settings

Diagnosing and Repairing Network Settings

IJ Network Device Setup Utility diagnoses and repairs computer settings or connection between the computer and printer when a problem (e.g. cannot print from a printer on the network) occurs.

Important

- Some models do not support diagnosis and repair function.

  For details:

  List of Models Which Does Not Support Diagnosis and Repair Function

IJ Network Device Setup Utility starts checking the computer settings when it starts up. Perform operations following the instructions on the screen.

Note

- This function checks the following items:
  - whether the computer is connected to the router
  - whether the printer can be detected on the network
  - whether the signal strength or communication level is sufficient (when using Wi-Fi)
  - whether the printer port setting matches with the network setting

List of Models Which Does Not Support Diagnosis and Repair Function

The following models does not support "Diagnose and Repair" function of IJ Network Device Setup Utility.

- G4000 series
- PRO-500 series
- PRO-1000 series
- MB2100 series
- MB2700 series
- MB5100 series
- MB5400 series
- iB4000 series
- PRO-520
- PRO-540
- PRO-560
- PRO-540S
- PRO-560S
- PRO-2000
- PRO-4000
- PRO-6000
- PRO-4000S
- PRO-6000S
- TS9000 series
- TS8000 series
- TS6000 series
- TS5000 series
- MG3000 series
- E470 series

Other Network Information

- Technical Terms
- Restrictions
- Firewall
- List of Devices Which May Interfere with Wi-Fi Communication

Technical Terms

In this section, technical terms used in the manual are explained.

- A
- B
- C
- D
- E
- F
- H
- I
- K
- L
- M
- O
- P
- R
- S
- T
- U
- W

A

- **Ad-hoc**

  Client computer and printer setting where wireless communication occurs on a peer-to-peer basis, i.e., all clients in with the same network name (SSID) communicate directly with each other. No wireless router is required. This printer does not support ad-hoc communication.

- **Admin Password**

  Administrator password in IJ Network Device Setup Utility to restrict access to network users. It must be entered to access the printer and change printer settings.

- **AES**

  An encryption method. It is optional for WPA. Strong cryptographic algorithm adopted within U.S. government organizations for information processing.

- **Authentication Method**

  The method that a wireless router uses to authenticate a printer through a Wi-Fi. The methods are agreeable each other.

  For WPA/WPA2, authentication method is PSK.

B

- **Bonjour**

  A service built into macOS operating system to detect the connectable devices on a network automatically.

C

- **Channel**

  Frequency channel for wireless communication. In the infrastructure mode, the channel is automatically adjusted to match that set to the wireless router. This printer supports channels 1 to 13. (Channels 12 and 13 are not supported depending on the country or region of purchase.) Note that the number of channels that can be used for your Wi-Fi varies depending on the region or country.

D

- **Default Gateway**

  A relay device to connect to another network such as a router or a computer.

- **Default router address**

  A default IP address set for a router.

- **DHCP server functionality**

  The router assigns an IP address automatically whenever the printer or the personal computer on a network starts up.

- **DHCPv6**

  A protocol to assign necessary information automatically when a computer connects to network. DHCPv6 can be used when IPv6 is enabled.

- **DNS server**

  A server that converts device names into IP addresses. When specifying IP addresses manually, specify the addresses of both a primary and a secondary server.

E

- **Easy wireless connect (Cableless setup)**

  Specifies a wireless router settings using a device (e.g. smartphone) directly without using a wireless router.

F

- **Firewall**

  It is a system that prevents an unlawful computer access in the network. To prevent, you can use the firewall function of a broadband router, the security software installed in the computer, or operation system for computer.

H

- **Host name**

  A name for a computer or printer on network so that it can be recognized easily. Single-byte alphanumeric characters are used generally.

I

- **IEEE802.11b**

  International standard for Wi-Fi using the 2.4 GHz frequency range with a throughput of up to 11 Mbps.

- **IEEE802.11g**

  International standard for Wi-Fi using the 2.4 GHz frequency range with a throughput of up to 54 Mbps. Compatible with 802.11b.

- **IEEE802.11n**

  International standard for Wi-Fi using the 2.4 GHz and 5 GHz frequency ranges. Even when using two or more antennas simultaneously or obtaining a bigger transfer rate than before by using multiple communication channels at the same time, the transmission speed may be influenced by the connected apparatus.

  At the maximum transfer rate of 600 Mbps, it is possible to communicate with multiple computer terminals within a dozen or so metre radius.

  Compatible with 802.11b and 802.11g.

- **Infrastructure**

  One of the wireless communication methods. Wireless communication devices (e.g. computer or printer) are connected to the network via a wireless router.

- **IP Address**

  A unique number with four parts separated by dots. Every network device that is connected to the Internet has an IP address. Example: 192.168.0.1

  An IP address is usually assigned by a wireless router or a DHCP server of the router automatically.

- **IPv4/IPv6**

  They are internetwork-layer protocol used on the internet. IPv4 uses 32-bit addresses and IPv6 uses 128-bit addresses.

K

- **Key Format**

  Select either **ASCII** or **Hex** as the WEP key format. The character that can be used for the WEP key differs depending on the selected key formats.

  - ASCII

    Specify with a 5 or 13-character string that can include alphanumeric and underscore "_" characters. It is case-sensitive.

  - Hex

    Specify a 10-digit or 26-digit string that can contain hexadecimal (0 to 9, A to F, and a to f).

- **Key Length**

  Length of the WEP key. Select either 64 bits or 128 bits. Longer key length allows you to set a more complex WEP key.

L

- **Link local address**

  An IP address generated automatically from a specific prefix (information of current network: fe80::) and an interface identifier generated from printer's MAC address.

- **Link Quality**

  The status of the connection between the wireless router and the printer excluding noise (interference) is indicated with a value from 0 to 100%.

- **LPR**

  A platform-independent printing protocol used in TCP/IP networks. It does not support bidirectional communication.

M

- **MAC Address**

  Also known as the physical address. A unique and permanent hardware identifier that is assigned to network devices by its manufacturer. MAC addresses are 48 bits long and are written as a hexadecimal number separated by colons, i.e., 11:22:33:44:55:66.

O

- **Operation Status**

  Indicates the status on whether the printer can be used.

P

- **Prefix length**

  The number of bits on the network part of an IP address. The number of bits is 8 bit to 24 bit for IPv4, and 64 bit for IPv6.

- **Proxy server**

  A server that links a LAN-connected computer to the Internet. When using a proxy server, specify the address and the port number of the proxy server.

- **PSK**

  An encryption method employed by WPA/WPA2.

R

- **Router**

  A relay device to connect to another network.

S

- **Signal Strength**

  The strength of the signal received by the printer from the wireless router is indicated with a value from 0 to 100%.

- **Network name (SSID)**

  Unique label for Wi-Fi. It is often represented such as a network name or a wireless router name.

  network name (SSID) distinguishes one Wi-Fi from another to prevent interference.

  The printer and all clients on a Wi-Fi must use the same network name (SSID) in order to communicate with each other. The network name (SSID) can be up to 32 characters long, and is made up of alphanumeric characters. The network name (SSID) may also be referred to by its network name.

- **Stealth**

  In the stealth mode, a wireless router hides itself by not broadcasting its network name (SSID). The client must specify the network name (SSID) set to the wireless router to detect it.

- **Stateful address**

  An IPv6 address acquired from a DHCP server using DHCPv6.

- **Stateless address**

  A tentative IPv6 address generated automatically using a prefix included in RA (Router Advertisement) and a MAC address. An IPv6 address is generated in an environment where a DHCP server is not available.

- **Subnet Mask**

  IP address has two components, the network address and the host address. Subnet Mask used to calculate the Subnet Mask address from the IP address. A Subnet Mask is usually assigned by a wireless router or a DHCP server of the router automatically.

  Example:

  IP Address: 192.168.127.123

  Subnet Mask: 255.255.255.0

  Subnet Mask Address: 192.168.127.0

T

- **TCP/IP**

  Suite of communications protocols used to connect hosts on the Internet or the LAN. This protocol allows different terminals to communicate with each other.

- **TKIP**

  An encryption protocol employed by WPA/WPA2.

U

- **USB**

  Serial interface designed to enable you to "hot-swap" devices, i.e., by plugging and unplugging them without turning off the power.

W

- **WCN (Windows Connect Now)**

  Users running Windows Vista or later can obtain the setting information directly via wireless network (WCN-NET).

- **WEP/WEP Key**

  An encryption method employed by IEEE 802.11. Shared security key used to encrypt and decrypt data sent over wireless networks. This printer supports key length of 64 bits or 128 bits, key format of ASCII code or Hexadecimal, and key number of 1 to 4.

- **Wi-Fi**

  International association that certifies interoperability of Wi-Fi products based on the IEEE 802.11 specification.

  This printer is a Wi-Fi authorized product.

- **Wireless Direct**

  The printer is used as a wireless router to connect external wireless communication devices (e.g. computers, smartphones, or tablets) in an environment where no wireless router is available. You can connect up to 5 devices to the printer using Wireless Direct.

- **Wireless LAN**

  A network that, instead of being connected by physical wires, is connected by a wireless technology, such as Wi-Fi.

- **Wireless Router**

  A wireless transceiver or base station that receives information from wireless clients/the printer and rebroadcasts it. Required in an infrastructure network.

- **WPA**

  Security framework announced by the Wi-Fi Alliance in October 2002. The security has been strengthened more than WEP.

  - Authentication

    WPA defines the following authentication methods: PSK that can be used without an authentication server, plus WPA-802.1x that do require an authentication server.

    This printer supports WPA-PSK.

  - Passphrase

    This encrypted key is used to perform WPA-PSK authentication.

    The password should be a string of 8 to 63 alphanumeric characters or a 64-digit hexadecimal value.

- **WPA2**

  Security framework released by the Wi-Fi Alliance in September 2004 as a later version of WPA. Provides a stronger encryption mechanism through Advanced Encryption Standard (AES).

  - Authentication

    WPA2 defines the following authentication methods: PSK that can be used without an authentication server, plus WPA2-802.1x that do require an authentication server.

    This printer supports WPA2-PSK.

  - Passphrase

    This encrypted key is used to perform WPA2-PSK authentication.

    The password should be a string of 8 to 63 alphanumeric characters or a 64-digit hexadecimal value.

- **WPS (Wi-Fi Protected Setup)**

  WPS is a standard for easy and secure establishment of a wireless network.

  There are 2 primary methods used in the Wi-Fi Protected Setup:

  PIN entry: a mandatory method of setup for all WPS certified devices

Push button configuration (PBC): an actual push button on the hardware or through a simulated push button in the software.

Restrictions

If you use a printer over the Wi-Fi, we highly recommend you perform security settings for Wi-Fi network using WPA/WPA2 from the viewpoint of security. Wireless communication with a product that does not comply with the Wi-Fi standard cannot be guaranteed.

Connecting with too many computers may affect the printer performance, such as printing speed.

If you use a printer with Wireless Direct, you cannot perform the following settings:

- Specifying an IP address manually
- Enabling/disabling IPv6

Firewall

A firewall is a function of the security software installed in the computer or operation system for computer, and is a system that is designed to prevent unauthorized access to a network.

Precautions When Firewall Function is Enabled

- A firewall function may limit communications between a printer and a computer. This may disable printer setup and communications.
- During the printer setup, you may be prompted to enable or disable communications, depending on the firewall function of the security software or operation system. If so, choose to enable communications.
- When using IJ Network Device Setup Utility, you may be prompted to enable or disable communications, depending on the firewall function of the security software. If so, choose to enable communications.
- If you cannot set up the printer, temporarily disable the firewall function of the security software or operation system.

  Important

  - If you disabled the firewall function, disconnect your network from the Internet.

- Some applications (like the network configuration software) override firewall settings. Check the application's settings beforehand.

Note

- For the operation system firewall settings or the security software firewall settings, refer to the instruction manual of the computer or software, or contact its manufacturer.

List of Devices Which May Interfere with Wi-Fi Communication

While using the printer via Wi-Fi, the following devices near the printer or wireless router may cause radio frequency interference and affects connection between the printer and wireless router. Radio frequency interference may cause sending print jobs or printing speed to slow down.

- Microwave oven
- Baby monitor
- Wireless mouse
- Wireless keyboard
- Wireless earphone/headphones
- Wireless camera (e.g. security camera)

We recommend you take measures below to avoid radio frequency interference.

- Place the devices above as far away from the printer or wireless router as possible.
- Turn the devices off and stop using them temporarily.

Sharing the Printer on a Network (macOS)

When multiple computers are being used in the network environment, you can share the printer connected to one computer with the other computers.

Before carrying out the setup for printer sharing, select **Network** from **System Preferences**, and check whether the network settings have been set.

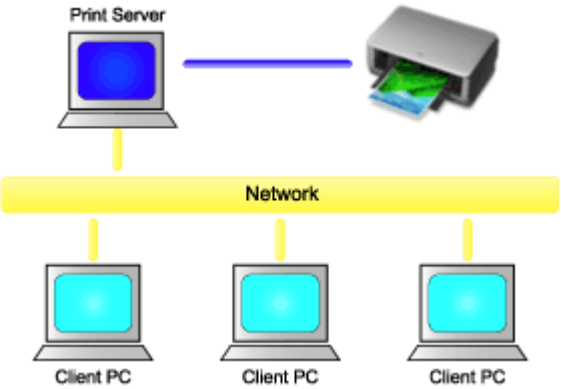

This section describes the procedure for sharing a printer among Mac.

- Settings on Print Server

  This section describes how to set up a computer that connects with this printer.
- Settings on Client PC

  This section describes the procedure for setting a computer that uses this printer though a network. When you execute print, the data is sent to the printer through the print server system.

Related Topic

- Restrictions on Printer Sharing

Settings on Print Server

When you use the printer on a network, set up the printer driver for sharing on the print server system.

The procedure for setting up the print server systems is as follows:

1. Install the printer driver on the print server system

2. Check that the printer to be used has been added

   Open **System Preferences**, and select **Printers & Scanners**.
   The printer list displays the printers that are connected to the computer.

3. Set sharing

   Check the **Share this printer on the network** check box.

Note

- Depending on the environment you are using, a message prompting you to restart the computer may be displayed. To complete the installation properly, restart the computer.

The setup on the print server system is complete. Next, set up the client systems.

Settings on Client PC

After setting up the print server system, set up the client system.

The procedure for setting up the client systems is as follows:

1. Install the printer driver on the client systems

2. Display the printer list

   Open **System Preferences**, and select **Printers & Scanners**.
   Click **+** to display the printer list.

3. Add a printer to be shared

   Select a shared printer displayed in the printer list, and then click **Add**.

The setup on the client systems is now completed.

Note

- The print procedures are the same as when the computer is connected directly to the printer with a USB cable.
  At the Page Setup dialog, select the printer that is connected to the print server to be used.

Restrictions on Printer Sharing

These are restrictions that apply when you are using a printer in a network environment.

- Install the same version of the printer driver in the print server system and the client systems. You can download the latest printer driver from our web site.
- Use printer sharing with users who have the administrator privilege.
- Depending on how the computer is connected with the printer, the computer may not be able to access the function information that was set on the printer and display the correct settings.
- Media information on the printer driver cannot be changed when using a client machine.

Connecting Smartphone/Tablet to Printer via Wi-Fi

- **To connect a smartphone or tablet to printer via a wireless router:**

  Connecting Smartphone/Tablet to Printer via Wireless Router

- **To connect a smartphone or tablet to printer without a wireless router:**

  Connecting Smartphone/Tablet to Printer Directly (Wireless Direct)

Connecting Smartphone/Tablet to Printer via Wireless Router

You can connect devices (e.g. smartphone, or tablet) to the printer by two methods below.

- Wi-Fi connection (connecting devices via a wireless router)
- Wireless Direct connection (connecting devices without using a wireless router)

This section describes Wi-Fi connection via a wireless router.

Follow the procedure below to connect via a wireless router.

1. Confirm the Printer's Wi-Fi Connection is Enabled
2. Connect Smartphones and Tablets to the Printer

Important

- Check the usage restrictions and change the printer LAN setting.

  Restrictions

- The administrator password is required to change settings if it is enabled for changing settings using the operation panel.

Confirm the Printer's Wi-Fi Connection is Enabled

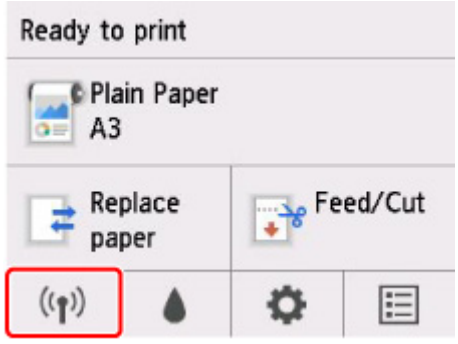

If a different network icon is displayed on the HOME screen, follow the procedure below to enable Wi-Fi connection.

1. On the HOME screen, tap the **Network** icon.

   Menu Operations

2. Tap **Wi-Fi**.

3. Tap **Settings**.

4. Tap **Enable/disable Wi-Fi**.

5. Tap **Enable**.

   The printer's Wi-Fi is enabled and you can connect the Wi-Fi you connected previously.

Connect Smartphones and Tablets to the Printer

- For Android device
- For iOS device

For Android device

1. Open "Settings" menu on your device.

2. Enable "Wi-Fi".

3. Select wireless router SSID you use from detected device list.

4. Enter wireless LAN router password.

   Your device is connected to the printer.

5. Start printing from application.

For iOS device

1. Open "Settings" menu on your device.

2. Enable "Wi-Fi".

3. Select wireless router SSID you use from detected device list.

4. Enter wireless LAN router password.

   Your device is connected to the printer.

5. Start printing from application.

Adjustments for Better Print Quality

- **Adjusting the Print Head**
  - Adjusting the Print Head
  - Troubleshooting Paper Abrasion and Blurry Images
- **Adjusting Feed Amount**
  - Adjusting Feed Amount
  - Adjusting Vacuum Strength

Adjusting the Print Head

- Adjusting the Print Head
- Troubleshooting Paper Abrasion and Blurry Images

Adjusting the Print Head

If printed documents are affected by the following problems, try adjusting the print head.

- **If printing is faint or affected by banding in different colors**

  Execute **Print nozzle check pattern** in the touch screen menu to check for print head nozzle clogging.

  Checking for Nozzle Clogging

- **If printed lines are misaligned, vertical lines are warped, or colors are out of alignment**

  If printed lines are misaligned, execute **Print head angle adjustment** in the touch screen menu to adjust the print head angle.

  Always adjust the print head angle after replacing the print head.

  After executing **Print head angle adjustment**, adjust the print head position.

  Adjusting Line Misalignment

  If printed vertical lines are warped or colors are out of alignment, execute **Print head alignment** in the touch screen menu to adjust the print head position.

  First, execute **Auto (standard)** of **Print head alignment**. If the print result is not improved, execute **Auto (fine)** or **Manual**.

  Automatic Adjustment to Straighten Lines and Colors
  Manual Adjustment to Straighten Lines and Colors

- **If paper rubs against the print head, or image edges are blurred**

  Setting **Paper Thickness (Head Height)** in the touch screen menu and changing the height of the print head may improve the situation.

  Troubleshooting Paper Abrasion and Blurry Images

Adjusting Line Misalignment

If printed lines are misaligned, execute **Print head angle adjustment** to adjust the print head angle. **Print head angle adjustment** requires you to examine a printed test pattern and adjust the angle using the angle adjustment lever.

Always adjust the print head angle after replacing the print head.

Important

- Because the results of adjustment vary depending on the type of paper used for adjustment, use the same type of paper as you will use for printing.
- When using cut sheets, do not move the release lever until instructions (guidance) for removing the paper are displayed.

  Moving the release lever during printing or maintenance operations will cause the printer to stop.

Paper to Prepare

When using rolls

An unused roll at least 10.00 inches (254.0 mm) wide

When using sheets

One sheet of unused paper of at least A4/Letter size

Perform adjustment as follows.

1. Load paper.

   - Loading Rolls on the Roll Holder
   - Loading Rolls in the Printer
   - Loading Sheets in the Printer

   Important

   - Always make sure the loaded paper matches the type of paper specified on the printer. Adjustment cannot be completed correctly unless the loaded paper matches the settings.

2. Tap (Setup) > **Maintenance** on HOME screen.

   - Touch Screen

   The **Maintenance** screen appears.

3. Tap **Print head angle adjustment**.

   A confirmation message appears.

4. Tap **Yes**.

   The carriage moves and the guidance for the print head angle adjustment procedure appears on the touch screen.

5. Open the top cover.

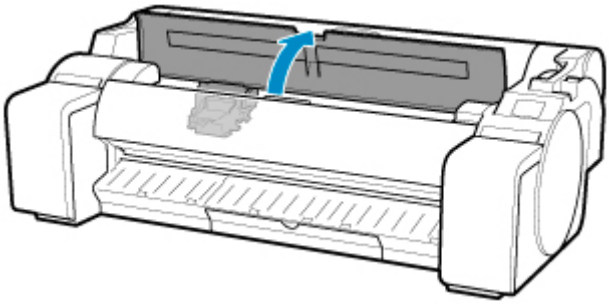

6. Align the angle adjustment lever with the red square and close the top cover.

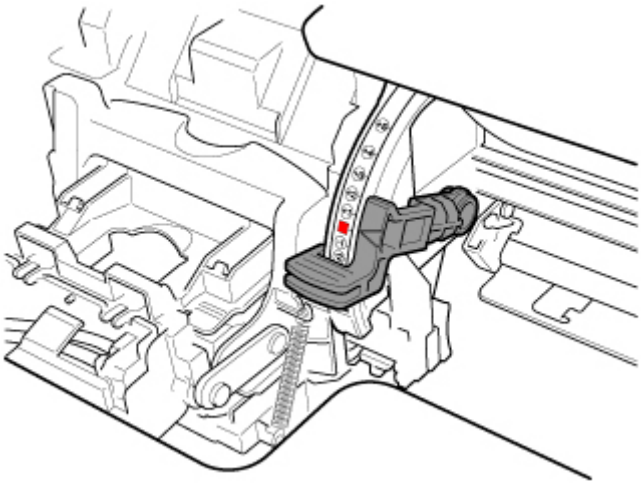

A test pattern is printed for adjustment.

Important

- Do not touch the linear scale (A) or carriage shaft (B). Touching these may cause malfunction.

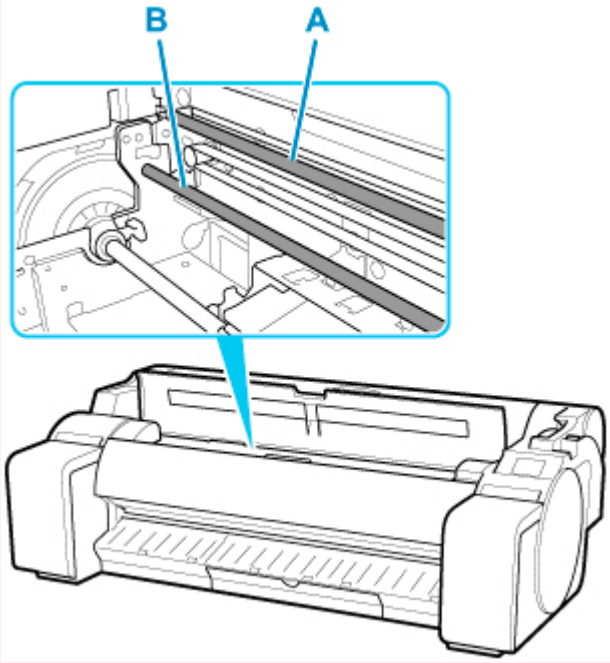

7. Examine the test pattern for adjustment. Determine the straightest set of lines.

Example 1: Select "+2" in pattern (C).

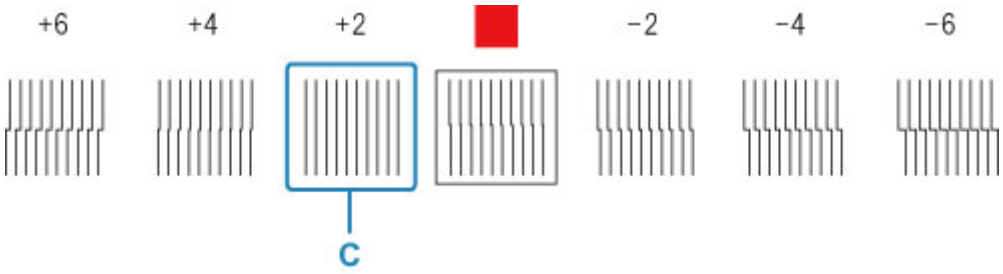

Example 2: Move the angle adjustment lever to a position between the numbers or between the number and the square (D) of the two sets of lines that are least misaligned. In this case, select -1.

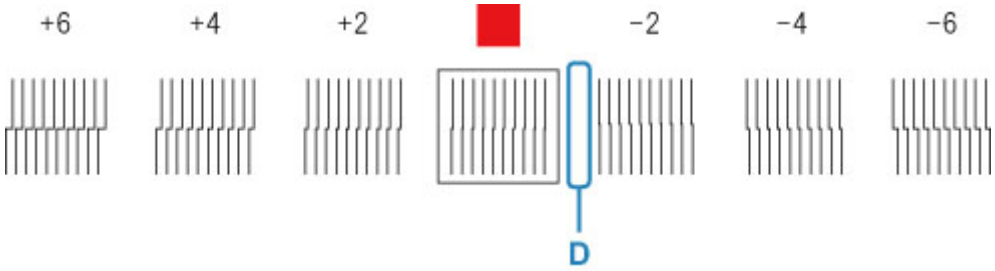

8. Open top cover and move angle adjustment lever to match number (or square) of straightest set of lines.

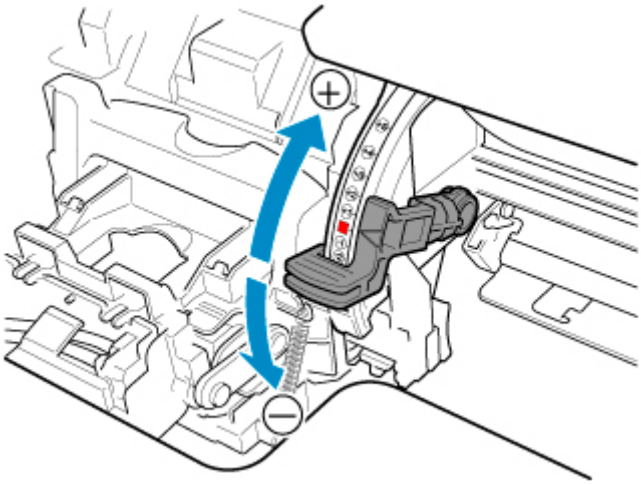

9. Close the top cover.

The print head is now straight, and adjustment is complete.

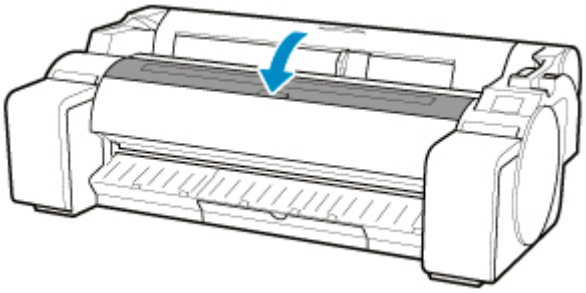

Note

- If the problem, such as misaligned lines or color unevenness, is not solved after adjustment, execute **Print head angle adjustment** and move the angle adjustment lever in the front or the rear of the last position. When finished, execute **Print head alignment** again.

Automatic Adjustment to Straighten Lines and Colors

If printed vertical lines are warped or colors are out of alignment, execute **Print head alignment** and adjust the print head position.

Choose from **Auto (standard)** or **Auto (fine)** for automatically adjusting the print head.

Minor warping and misaligned colors can usually be improved by executing **Auto (standard)**. If there is no improvement, perform **Auto (fine)** or **Manual**.

Manual Adjustment to Straighten Lines and Colors

When you execute **Auto (standard)** or **Auto (fine)**, the adjustment pattern is printed, and the print head position is adjusted based on the printing result automatically.

Important

- If the problem, such as misaligned lines, is conspicuous, or other problem, such as color unevenness, is not solved after executing **Print head alignment**, execute **Print head angle adjustment** and then execute **Print head alignment** again.

  Adjusting Line Misalignment

- Because the results of adjustment vary depending on the type of paper used for adjustment, use the same type of paper as you will use for printing.
- This function is not available with Tracing Paper, Translucent Matte Film, or Clear Film.
- When using cut sheets, do not move the release lever until instructions (guidance) for removing the paper are displayed.

  Moving the release lever during printing or maintenance operations will cause the printer to stop.

Note

- After print head replacement, execute **Print head alignment**. When **Print pattern after new head** is set to **ON**, print head position adjustment is automatically executed after print head replacement.
- To change the paper type or for more beautiful color borders, perform **Auto (standard)**.
- To ensure clear quality and when replacing the print head, perform **Auto (fine)** to fine-tune the position between nozzles and colors. To ensure high-quality printing, we recommend that you execute **Auto (fine)**.
- If adjustment is not possible as expected using special paper, try another type of paper or try **Manual** adjustment.

  Manual Adjustment to Straighten Lines and Colors

Paper to Prepare

When using rolls

An unused roll at least 10.00 inches (254.0 mm) wide

When using sheets

Auto (standard): Three sheets of unused paper, A4/Letter size or larger (or one sheet when using A2 or larger)

Auto (fine): Five sheets of unused paper, A4/Letter size or larger (or one sheet when using A2 or larger)

Perform adjustment as follows.

1. Load paper.

   - Loading Rolls on the Roll Holder
   - Loading Rolls in the Printer
   - Loading Sheets in the Printer

   Important

   - Always make sure the loaded paper matches the type of paper specified on the printer. Adjustment cannot be completed correctly unless the loaded paper matches the settings.

2. Tap (Setup) > **Maintenance** on HOME screen.

   - Touch Screen

   The **Maintenance** screen appears.

3. Tap **Print head alignment**.

4. Tap **Auto (standard)** or **Auto (fine)**.

   A confirmation message appears.

5. Tap **Yes**.

   The paper source setting screen appears.

6. Tap **Roll paper** or **Manual**.

   A test pattern is printed for adjustment.

   Note

   - If you are printing on sheets smaller than A2 size, a confirmation message prompting you to continue printing appears on the touch screen. Tap **OK** and follow the instructions on the touch screen.

Manual Adjustment to Straighten Lines and Colors

If printed vertical lines are warped or colors are out of alignment, execute **Print head alignment** and adjust the print head position.

Normally, execute **Auto (standard)**.

- Automatic Adjustment to Straighten Lines and Colors

However, when printing on special paper or if printing is not improved after **Auto (fine)**, try **Manual**.

Manual adjustment requires you to examine the printed test pattern and enter an adjustment value.

Important

- Because the results of adjustment vary depending on the type of paper used for adjustment, use the same type of paper as you will use for printing.
- When using cut sheets, do not move the release lever until instructions (guidance) for removing the paper are displayed.

  Moving the release lever during printing or maintenance operations will cause the printer to stop.

Paper to Prepare

When using rolls

An unused roll at least 10.00 inches (254.0 mm) wide

When using sheets

Four sheets of unused paper, A4/Letter size or larger (or two sheets when using A2 or larger)

Perform adjustment as follows.

1. Load paper.

   - Loading Rolls on the Roll Holder
   - Loading Rolls in the Printer
   - Loading Sheets in the Printer

   ## Important

   - Always make sure the loaded paper matches the type of paper specified on the printer. Adjustment cannot be completed correctly unless the loaded paper matches the settings.

2. Tap (Setup) > **Maintenance** on HOME screen.

   - Touch Screen

   The **Maintenance** screen appears.

3. Tap **Print head alignment**.

4. Tap **Manual**.

   A confirmation message appears.

   Note

   - If you do not execute **Auto (fine)**, a confirmation message prompting you to execute **Auto (fine)** appears. In this case, tap **Yes** and execute **Auto (fine)**.

5. Tap **Yes**.

   The paper source setting screen appears.

6. Tap **Roll paper** or **Manual**.

   A test pattern is printed for adjustment.

7. Tap D-1.

8. Examine adjustment test pattern D-1 and determine the number with straight lines.

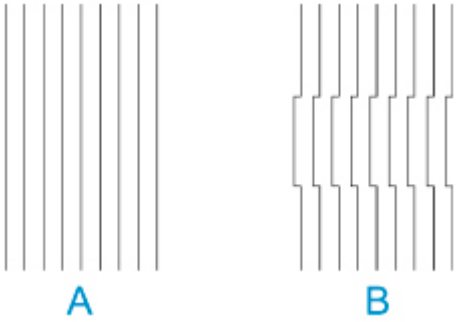

   A: Example with straight lines
   B: Example with misaligned lines

   Note

   - If two patterns seem equally good and you cannot decide which one is better, choose an intermediate value. For example, choose 11 if you cannot decide whether pattern 10 or 12 is better.

9. Repeat steps 7–8 to specify adjustment value for D-2 to D-41.

   Note that D-6, D-12, D-18, D-24, D-30, and D-36 cannot be configured.

10. Tap **OK**.

    The adjustment value is now registered, and adjustment is complete.

Troubleshooting Paper Abrasion and Blurry Images

The print head height setting affects printing quality.

Specifying a low print head height makes images clearer and enhances printing quality but may cause paper to rub against the print head.

On the other hand, specifying a high print head height will prevent paper from rubbing against the print head but may reduce the printing quality.

Important

- Paper rubbing against or becoming caught on the print head may jam or result in printed documents that are soiled.

Note

- Raise or lower print head, depending on nature of the problem.
  - Paper rubs against the Print Head
  - The edges of the paper are dirty
  - Image edges are blurred or white banding occurs

1. Tap paper setting display area on HOME screen.

   - Touch Screen

   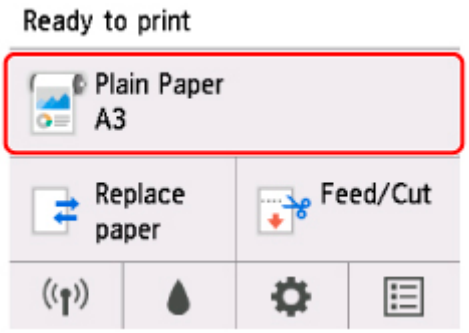

   The **Paper menu** screen appears.

2. Tap **Paper settings**.

   The **Paper settings** screen appears.

3. Tap **Advanced**.

   The **Advanced paper settings** screen appears.

4. Tap **Paper Thickness (Head Height)**.

5. Drag slider to set paper thickness (head height) and tap **OK**.

Note

- When **Auto** is set to **ON**, before printing, the printer automatically adjusts the print head height to the level optimal for the ambient temperature and humidity. You can check the setting for the previous print job in **Values applied with auto settings**.

  Printer information

- When **Auto** is set to **OFF**, the setting selected during this procedure is applied.
- Depending on the type of paper, some setting values may not be available.

Adjusting Feed Amount

- Adjusting Feed Amount
- Adjusting Vacuum Strength

Adjusting Feed Amount

- Selecting Feed Amount Adjustment Method
- Automatic Banding Adjustment
- Manual Banding Adjustment
- Fine-Tuning Paper Feed Amount
- Adjusting Line Length

Selecting Feed Amount Adjustment Method

There are two methods of adjusting the paper feed amount, **Prioritize print quality** and **Prioritize length accuracy**, either of which will be applied during printing.

Since the method that is applied during printing is determined from the value of the **Set priority** setting, configure **Set priority** to match the print target.

Follow the procedure below to perform settings.

1. Load paper.

   - Loading Rolls on the Roll Holder
   - Loading Rolls in the Printer
   - Loading Sheets in the Printer

2. On the HOME screen, tap (**Setup**).

   - Menu Operations

3. Tap **Maintenance**.

4. Tap **Paper feed adjustment**.

5. Tap **Set priority**.

6. Tap paper to adjust.

7. Tap setting.

   Auto

   Prioritize print quality or **Prioritize length accuracy** is selected, depending on the setting as selected in the printer driver at the time of printing.

   Prioritize print quality

   Adjusts the feed amount to reduce banding across the sheet in printed documents. **Adjust print quality** settings are applied. When **Paper feed fine adjustment** is executed, the **Paper feed fine adjustment** settings are applied in addition to the **Adjust print quality** settings.

   Prioritize length accuracy

   Adjusts the feed amount for better accuracy of lines in printed documents. The value of **Change adjustment values** in **Adjust feed length** is applied.

8. Tap **OK**.

Automatic Banding Adjustment

If printed images are affected by banding in different colors across the sheet, execute **Adjust print quality** for automatic adjustment of the paper feed amount.

The printer prints and reads a test pattern for automatic adjustment of the feed amount.

Important

- When using highly transparent media, use manual adjustment.

  Manual Banding Adjustment

Note

- We recommend executing the adjustment if you have changed the paper type or paper size.
- Always check the **Set priority** values.

  Selecting Feed Amount Adjustment Method

- If additional fine-tuning is necessary, execute **Paper feed fine adjustment**.

  Fine-Tuning Paper Feed Amount

- Use **Adjust feed length** to ensure that lines in CAD drawings are printed at exactly the right length.

  Adjusting Line Length

- This may take some time, depending on the type of paper.

Items to Prepare

When Using Rolls	An unused roll at least 254.0 mm (10.00 in) wide
When Using Sheets	One sheet of unused paper of at least A4/Letter size

Follow the procedure below to adjust.

1. Load paper.

   Loading Rolls on the Roll Holder
   Loading Rolls in the Printer
   Loading Sheets in the Printer

2. On the HOME screen, tap (**Setup**).

   Menu Operations

3. Tap **Maintenance**.

4. Tap **Paper feed adjustment**.

5. Tap **Adjust print quality**.

6. Tap **Auto**.

7. Tap paper to adjust.

A test pattern is printed for adjustment and adjustment is finished.

Manual Banding Adjustment

If printed images are affected by banding in different colors, execute **Adjust print quality** for adjustment of the paper feed amount.

Use manual adjustment with highly transparent media.

Manual adjustment requires you to enter an adjustment value after a test pattern is printed.

Note

- We recommend executing the adjustment if you have changed the paper type or paper size.
- Always check the **Set priority** values.

  Selecting Feed Amount Adjustment Method

- If additional fine-tuning is necessary, execute **Paper feed fine adjustment**.

  Fine-Tuning Paper Feed Amount

- Use **Adjust feed length** to ensure that lines in CAD drawings are printed at exactly the right length.

  Adjusting Line Length

Items to Prepare

When Using Rolls	An unused roll at least 254.0 mm (10.00 in) wide
When Using Sheets	Two sheets of unused paper of at least A4/Letter size

Follow the procedure below to adjust.

1. Load paper.

   Loading Rolls on the Roll Holder
   Loading Rolls in the Printer
   Loading Sheets in the Printer

   ### Important

   - Always make sure the loaded paper matches the type of paper specified. Adjustment cannot be completed correctly unless the loaded paper matches the settings.

2. On the HOME screen, tap (**Setup**).

   Menu Operations

3. Tap **Maintenance**.

4. Tap **Paper feed adjustment**.

5. Tap **Adjust print quality**.

6. Tap **Manual**.

7. Tap paper to adjust.

Test pattern A is printed for manual adjustment.

Note

- When printing on sheets, follow the instructions on the screen and remove the sheet.

8. Examine test pattern A for adjustment. Determine pattern in which banding is least noticeable.

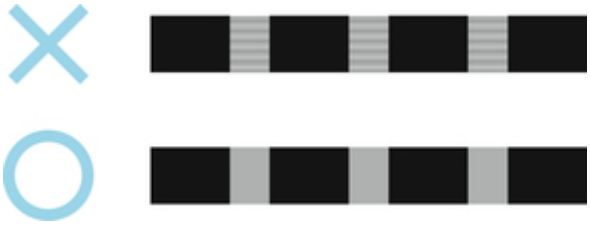

Note

- If banding seems least noticeable in two patterns but you cannot decide which one is better, choose an intermediate value. For example, choose 11 if you cannot decide whether pattern 10 or 12 is better.

9. Tap number you decided.

Test pattern B is printed for manual adjustment.

Note

- If you printed test pattern A on a sheet, follow the instructions on the screen and use another sheet of the same type of paper. Additionally, after test pattern B is printed, follow the instructions on the screen and remove the sheet.

10. Examine test pattern B for adjustment. Determine pattern in which banding is least noticeable.

11. Tap number you decided.

The adjustment value is now registered, and adjustment is complete.

Fine-Tuning Paper Feed Amount

If the contrast is uneven or banding in different colors appears at 30 mm (1.2 in) intervals in printed documents, try executing **Paper feed fine adjustment** during printing to fine-tune the feed amount.

Note

- The **Paper feed fine adjustment** menu is only displayed during printing.

  Additionally, it is displayed when you have selected **Auto** or **Prioritize print quality** in **Set priority** in **Paper feed adjustment**.

- Always execute **Adjust print quality** before **Paper feed fine adjustment**.

  Once you execute **Adjust print quality**, the **Paper feed fine adjustment** value will revert to 0.

  Automatic Banding Adjustment
  Manual Banding Adjustment

Follow the procedure below to adjust.

1. On the HOME screen, tap (**Setup**).

   Menu Operations

2. Tap **Maintenance**.

3. Tap **Paper feed fine adjustment**.

4. Tap value.

   At this time, if banding in dark colors appears, select a setting value in the range 1 to 5, and if banding in light colors appears, select a setting value in the range -1 to -5.

Adjusting Line Length

To ensure that lines in CAD drawings are printed at exactly the right length, use **Adjust feed length** to adjust the amount that paper is advanced.

There are two options in **Adjust feed length** : **Print alignment pattern** and **Change adjustment values**.

Note

- We recommend executing the adjustment if you have changed the paper type or paper size.
- Always check the **Set priority** values before adjustment.

  Selecting Feed Amount Adjustment Method

Items to Prepare

When Using Rolls	• An unused roll at least 254.0 mm (10.00 in) wide • High-precision ruler
When Using Sheets	• One sheet of unused paper of at least A4/Letter size • High-precision ruler

Follow the procedure below to adjust.

1. Load paper.

   Loading Rolls on the Roll Holder
   Loading Rolls in the Printer
   Loading Sheets in the Printer

   ### Important

   - Always make sure the loaded paper matches the type of paper specified. Adjustment cannot be completed correctly unless the loaded paper matches the settings.

2. On the HOME screen, tap (**Setup**).

   Menu Operations

3. Tap **Maintenance**.

4. Tap **Paper feed adjustment**.

5. Tap **Adjust feed length**.

6. Tap **Print alignment pattern** or **Change adjustment values**.

   - If you tap **Print alignment pattern**:

     The test pattern is printed for you to measure the scale and calculate the discrepancy.

     The scale bar prints "Millimeter" in 50 mm increments and "Inch" in 1-inch increments.

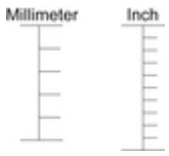

- If you tap **Change adjustment values**:

  No test pattern is printed. Instead, you will measure a document already printed to determine the discrepancy.

7. Tap amount of discrepancy.

If the scale is shorter than the actual size, use a positive setting value. If it is longer, use a negative value.

The feed amount can be adjusted in 0.02% increments.

Adjusting Vacuum Strength

When printing on heavyweight paper or paper that curls or wrinkles easily, if the print head rubs against paper, adjusting the level of suction against paper on the platen may improve results.

Important

- Paper rubbing against or becoming caught on the print head may jam or result in printed documents that are soiled.

1. On the HOME screen, tap paper information area.

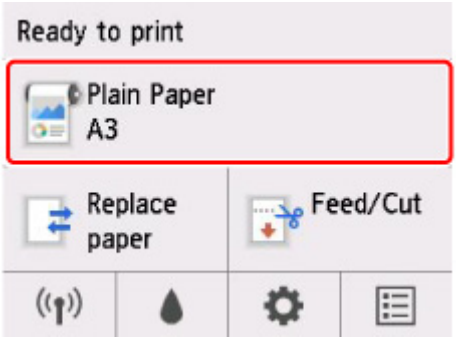

2. Tap **Paper settings**.

3. Tap **Advanced**.

4. Tap **Transport unit vacuum strength**.

5. Tap vacuum strength.

Maintenance and Consumables

- **Ink Tanks**
  - Ink Tanks
  - Replacing Ink Tanks
  - Checking Ink Tank Levels
  - When to Replace Ink Tanks
- **Print Head**
  - Print Head
  - Checking for Nozzle Clogging
  - Cleaning the Print Head
  - Replacing the Print Head
- **Maintenance Cartridge**
  - Maintenance Cartridge
  - Replacing the Maintenance Cartridge
  - Checking the Remaining Maintenance Cartridge Capacity
  - When to Replace the Maintenance Cartridge
- **Cutter Blade**
  - Cutter Blade
  - Replacing the Cutter Blade
- **Performing Maintenance Functions from Your Computer (Windows)**
  - Cleaning the Print Heads
  - Printing a Nozzle Check Pattern
- **Performing Maintenance Functions from Your Computer (macOS)**
  - Opening Remote UI for Maintenance
  - Cleaning the Print Heads
  - Printing a Nozzle Check Pattern
- **Cleaning the Printer**

- Cleaning the Printer Exterior
- Cleaning Inside the Top Cover
- Cleaning the Print Head

Other Maintenance

- Preparing to Transfer the Printer
- Reinstalling the Printer
- Firmware update

Ink Tanks

- Ink Tanks
- Replacing Ink Tanks
- Checking Ink Tank Levels
- When to Replace Ink Tanks

Ink Tanks

When purchasing, check the Model number.

4.4 fl oz (130 ml)

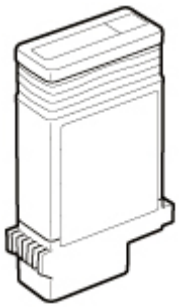

Colors	Model number
Matte Black	PFI-120 MBK
Black	PFI-120 BK
Cyan	PFI-120 C
Magenta	PFI-120 M
Yellow	PFI-120 Y

10.1 fl oz (300 ml)

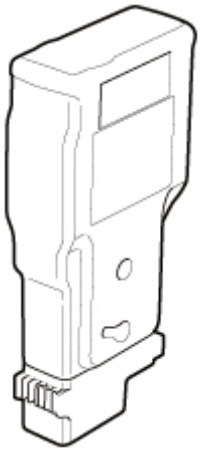

Colors	Model number
Matte Black	PFI-320 MBK
Black	PFI-320 BK
Cyan	PFI-320 C
Magenta	PFI-320 M
Yellow	PFI-320 Y

Note

- For instructions on replacing the ink tanks, see Replacing Ink Tanks.

Replacing Ink Tanks

Compatible Ink Tanks

For details on compatible ink tanks, see Ink Tanks.

You can replace ink tanks in 4.4 fl oz (130 ml) and 10.1 fl oz (300 ml).

Note

- Depending on the color, you can also use an ink tank with a different capacity.

Precautions When Handling Ink Tanks

Take the following precautions when handling ink tanks.

Caution

- For safety, keep ink tanks out of the reach of children.
- If ink is accidentally ingested, contact a physician immediately.

Important

- There may be ink around the ink holes of an ink tank you removed. Handle the ink tanks carefully during replacement. The ink may stain clothing.
- Do not install ink tanks used in this printer in another model of printer. This will prevent correct ink level detection, which may damage the printer or cause other problems.
- We recommend using up an ink tank in the course of printing within six months after breaking the seal. Printing quality may be affected if you use older ink tanks.
- Do not leave the printer without ink tanks installed for extended periods (a month or more). Residual ink may become clogged inside the printer and affect printing quality.

How to Replace an Ink Tank

If a message indicates you should replace an ink tank, check the message details and go to step 2.

1. Selecting Ink Tank Replacement from Menu
2. Removing Ink Tanks

   Removing ink tank

3. Loading New Ink Tanks

   Loading ink tank

Important

- Do not remove an ink tank during initialization immediately after turning on the printer, or during print head cleaning. Ink may leak out.

Note

- Ink tank replacement is possible even during printing, when print jobs are being canceled, or when paper is being advanced.

Selecting Ink Tank Replacement from Menu

1. Tap (Ink information) on HOME screen.

   Touch Screen

   The **Current estimated ink levels** screen appears.

2. Tap **Replace**.

   Instructions for the ink tank replacement procedure appear on the touch screen.

Removing ink tank

1. Open ink tank cover.

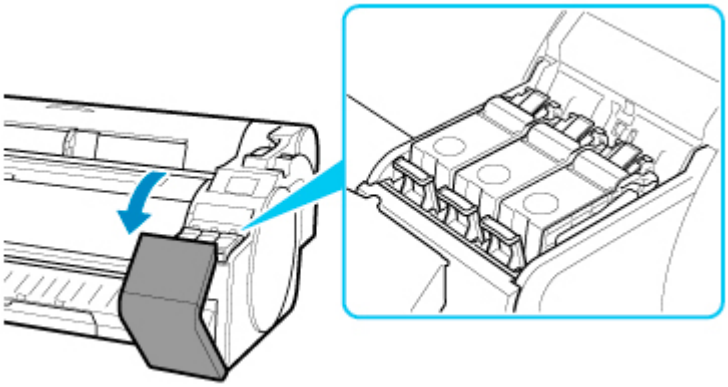

Important

- Avoid jarring the printer a lot when replacing an ink tank. Handle the printer gently when replacing tanks. Jarring the printer during printing may affect printing quality.

2. Press tip of ink tank lock lever of color for replacement horizontally and pull ink tank lock lever up to open it.

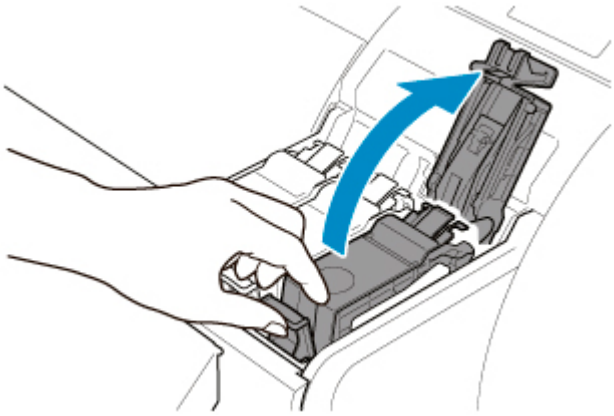

3. Remove ink tank by grips (A), and then tap **OK**.

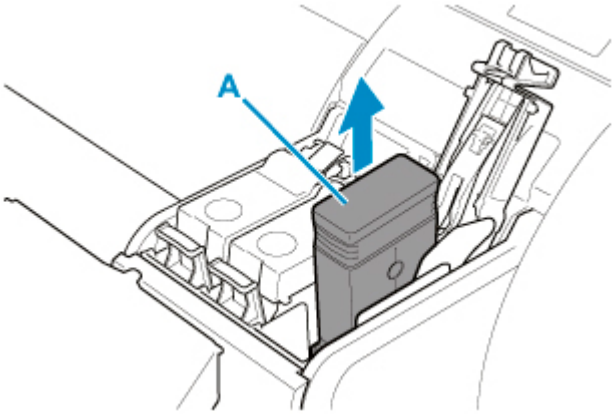

Important

- Do not turn off the printer, except transport preparation, while the ink tank is removed. It may cause the interior of the ink tank cover to become soiled.
- Store the removed ink tank with ink remaining with the ink holes (B) facing up. Otherwise, ink may leak and cause stains. Put the removed ink tank in a plastic bag and close the bag.

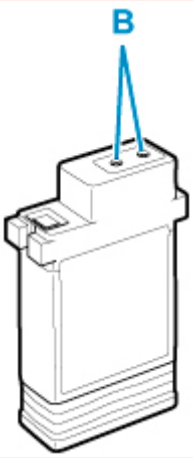

Note

- Dispose of the used ink tank in accordance with local regulations.

Loading ink tank

1. Before opening the pouch, tilt the ink tank to the left and right gently one or two times.

   Agitate the ink in the ink tank by slowly rotating the ink tank upside-down and right side up repeatedly.

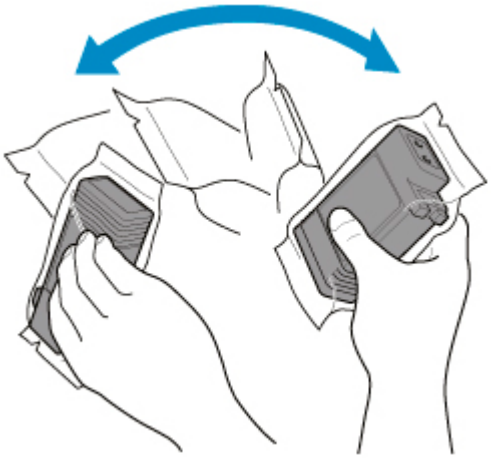

Important

- Do not remove and agitate an ink tank that has already been installed in the printer. Ink may leak out.
- Failure to agitate the ink tank may cause the ink components to precipitate and may affect printing quality.

Note

- If the ink tank is at a low temperature, allow it to warm up to room temperature before installing.

2. Open the pouch and remove the ink tank.

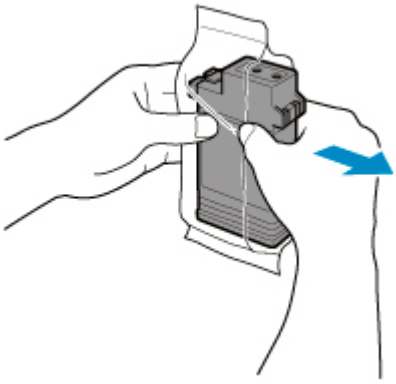

Important

- Never touch the ink holes (B) or the metal contacts (C). This may cause stains, damage the ink tank, and affect printing quality.

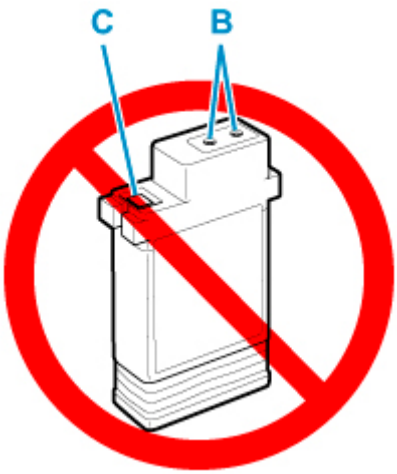

- Avoid dropping the ink tank after removing it from the pouch. Otherwise, ink may leak and cause stains.

3. Tap **OK** and insert ink tank into holder with ink holes down and metal contacts in front.

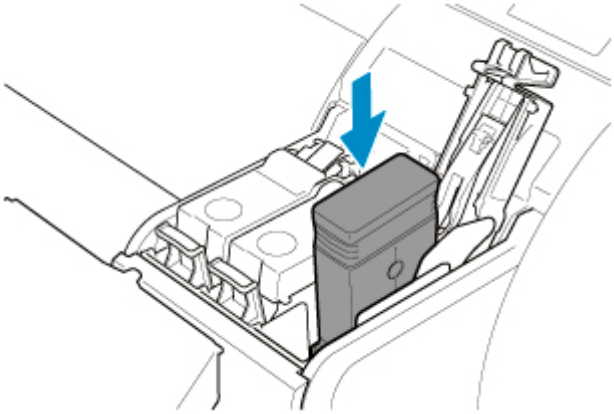

Important

- An ink tank cannot be loaded in the holder if the color or orientation is incorrect.

  If the ink tank does not fit in the holder, do not force it into the holder. Reinstall while checking the label color display, ink tank color, and ink tank orientation.

4. Push the ink tank lock lever closed until it clicks into place.

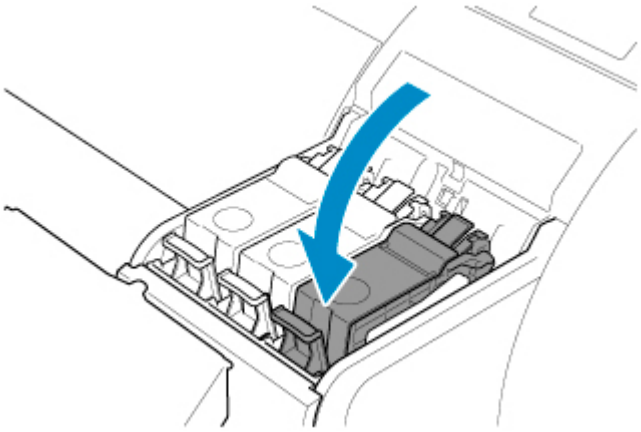

Important

- Do not push the ink tank in by hand. Forcing the ink tank into the holder may damage the printer.

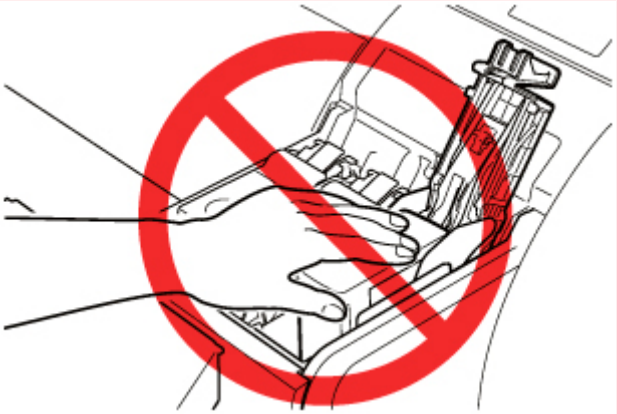

- If a 4.4 fl oz (130 ml) ink tank is installed facing the wrong direction, the rotating part of the ink tank lock lever come out of place. If this happens, open the ink tank lock lever to return it to the proper position.

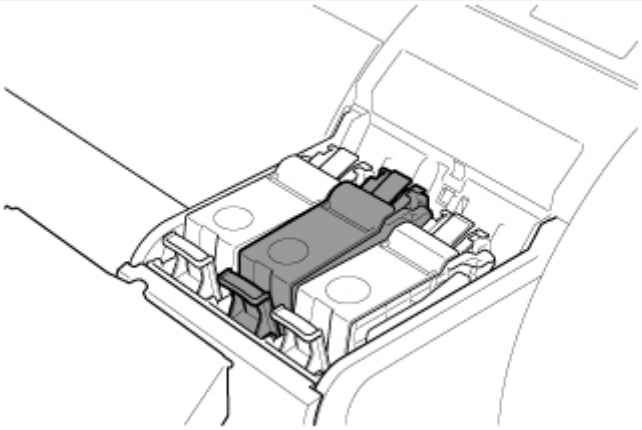

5. Close ink tank cover.

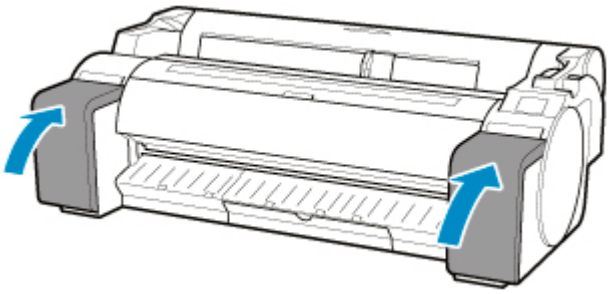

Checking Ink Tank Levels

On the touch screen, you can check how much ink is left in the ink tank.

1. Tap (Ink information) on HOME screen.

   Touch Screen

   The **Current estimated ink levels** screen appears.

   This printer has ink tanks (A) and sub-ink tanks (B). Even if ink runs out, printing can continue with ink in the sub-ink tanks.

   When the remaining ink is low, will appear on the remaining ink level. When ink runs out, will appear. See the figure below.

   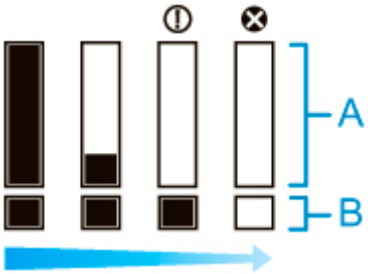

   If the touch screen indicates to replace the ink tank, replace the ink tank. If a message is displayed indicating to check the remaining ink levels, or after tasks that consume a lot of ink such as large-format printing or head cleaning, check the remaining levels and replace ink tank as needed.

   Replacing Ink Tanks

   Note

   - Tap **Order ink now** to view the ink supplier information.
   - When the function for detecting the remaining ink level is disabled, will appear on the remaining ink level.
   - If an ink tank is not inserted, there is no ink tank display.

When to Replace Ink Tanks

Replace or prepare to replace ink tanks in the following situations.

- **If ink confirmation message appears on touch screen**

  If ink is low, the **Status** lamp lights orange and a notification message will appear on the touch screen. You can continue to print, but prepare the ink tanks.

  Checking Ink Tank Levels

- **Before print jobs and maintenance that consume a lot of ink**

  If little ink is left, there may not be enough for large-format printing, head cleaning, and maintenance, which require a lot of ink. Replace or prepare to replace the ink tanks in the following situations.

- **If message for ink replacement appears on touch screen**

  When the ink runs out, the **Status** lamp flashes orange, a message regarding ink tanks replacement appears on the touch screen, and printing is disabled. Replace the ink tank.

Print Head

- Print Head
- Checking for Nozzle Clogging
- Cleaning the Print Head
- Replacing the Print Head

Print Head

When purchasing, check the Model number.

Model number: PF-06

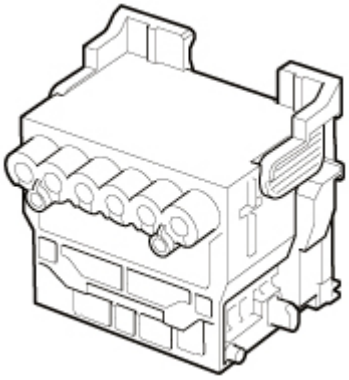

Note

- For instructions on replacing the print head, see Replacing the Print Head.

Checking for Nozzle Clogging

If printing is faint or affected by banding in different colors, make sure the print head nozzles are clear by printing a test pattern to check the nozzles.

Important

- When using cut sheets, do not move the release lever until instructions (guidance) for removing the paper are displayed.

  Moving the release lever during printing or maintenance operations will cause the printer to stop.

Note

- By default, nozzles are checked at fixed intervals.

  Auto maintenance settings

Paper to Prepare

When using rolls

An unused roll at least 10.00 inches (254.0 mm) wide

When using sheets

One sheet of unused paper of at least A4/Letter size

1. Load paper.

   Loading Rolls on the Roll Holder
   Loading Rolls in the Printer
   Loading Sheets in the Printer

2. Tap (Setup) > **Maintenance** on HOME screen.

   Touch Screen

   The **Maintenance** screen appears.

3. Tap **Print nozzle check pattern**.

   A confirmation message appears.

4. Tap **Yes**.

   The printer now prints a test pattern for checking the nozzles.

5. Check the printing results.

   If the horizontal lines are not faint or incomplete, the nozzles are clear.

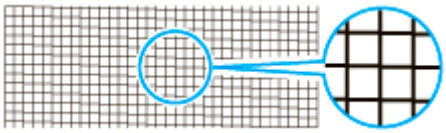

If some sections of the horizontal lines are faint or incomplete, the nozzles for those colors are clogged.

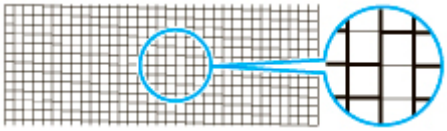

If horizontal lines are faint or incomplete, execute print head cleaning.

- Cleaning the Print Head

Cleaning the Print Head

If printing is faint, cleaning the print head may improve results.

Choose one of three print head cleaning modes (**Cleaning**, **Deep cleaning**, or **System cleaning**), depending on the problem to resolve.

- **Cleaning**

  Use this mode if printing is faint or contains foreign substances. This method of cleaning consumes the least amount of ink.

  It takes about 2 to 3 minutes.

- **Deep cleaning**

  Use this mode if no ink is ejected at all or if **Cleaning** does not solve the problem.

  It takes about 3 minutes.

- **System cleaning**

  Use this mode if printing is not improved after **Deep cleaning**. **System cleaning** consumes a very large amount of ink. Performing this frequently consumes the ink faster. Perform this only when needed.

  It takes about 4 minutes.

Important

- Do not remove the maintenance cartridge or ink tanks during **Cleaning**, **Deep cleaning**, or **System cleaning**.

  Ink may leak or an error may occur.

- If printing is not improved after **System cleaning**, the print head may be at the end of its service life. Contact your Canon dealer for assistance.
- When using cut sheets, do not move the release lever until instructions (guidance) for removing the paper are displayed.

  Moving the release lever during printing or maintenance operations will cause the printer to stop.

Note

- Check the nozzle check pattern and select an ink group for which to perform cleaning as needed. You can clean all print heads or select pattern 1 or 2 to clean the print heads with a clogged nozzle.

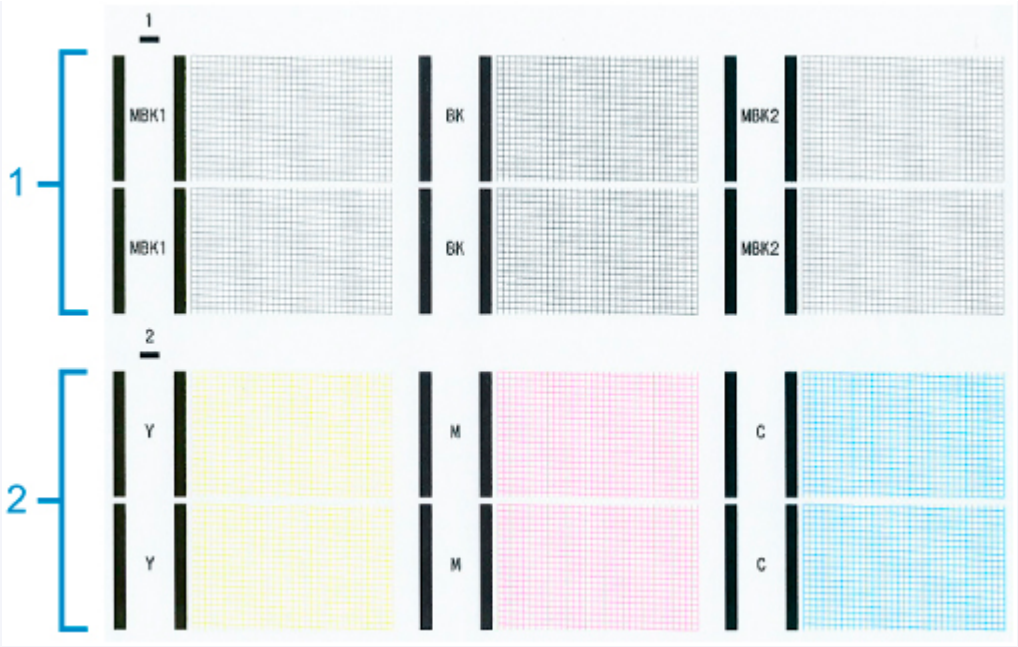

- By default, nozzles are checked at fixed intervals.

  Auto maintenance settings

Perform cleaning as follows.

1. Tap (Setup) > **Maintenance** on HOME screen.

   Touch Screen

   The **Maintenance** screen appears.

2. Tap **Print head cleaning**.

3. Tap **Cleaning**, **Deep cleaning**, or **System cleaning**.

4. Tap ink group to be cleaned.

   - **All colors**
   - **Pattern 1**: MBK / BK
   - **Pattern 2**: Y / M / C

   A confirmation message appears.

5. Tap **Yes**.

   Head cleaning is now executed.

6. Print a test pattern to check the nozzles and determine whether cleaning has cleared the nozzles.

   Checking for Nozzle Clogging

Replacing the Print Head

If the touch screen indicates to replace the print head or if instructed to do so by your Canon dealer, replace the print head.

Compatible Print Head

For details on compatible print head, see Print Head.

Precautions When Handling Print Head

Take the following precautions when handling the print head.

Caution

- For safety, keep print head out of the reach of children.
- If ink is accidentally ingested, contact a physician immediately.
- Do not touch the print head immediately after printing. The print head becomes extremely hot, and there is a risk of burns.

Important

- There may be ink around the nozzles of the print head you remove. Handle the print head carefully during replacement. The ink may stain clothing.
- Do not open the print head pouch until immediately before installation. After removing the print head from the pouch, install it right away. If the print head is left as is after the pouch is opened, the nozzles may dry out, which may affect printing quality.

How to Replace Print Head

Caution

- When replacing the print head immediately after printing, wait a few minutes before replacing it. The metal parts of the print head become hot during printing, and there is a risk of burns from touching these parts.

Important

- Your hands may become dirty during print head replacement. Use the gloves provided in the box with the new print head for replacement.

Note

- Prepare a new ink tank when ink levels are low.
- Prepare a new maintenance cartridge when the remaining capacity of the maintenance cartridge is low.

1. Tap (Setup) > **Maintenance** on HOME screen.

   Touch Screen

The **Maintenance** screen appears.

2. Tap **Head replacement**.

   A confirmation message appears.

3. Tap **Yes**.

   Ink begins being drawn in. When it finishes, instructions for the print head replacement procedure appear on the touch screen.

   It takes about 1 to 2 minutes for ink to be drawn into the system and remove ink from the print head.

4. Open top cover.

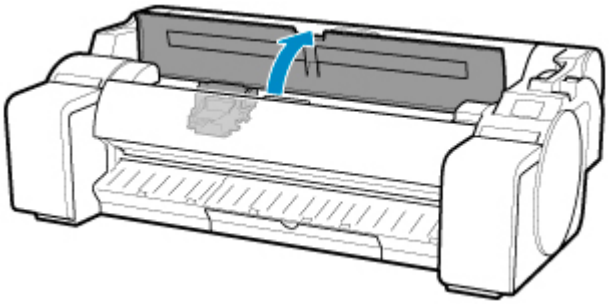

5. If the print head locking cover and print head lock lever are dirty, use a damp cloth that you have wrung out completely to wipe them clean.

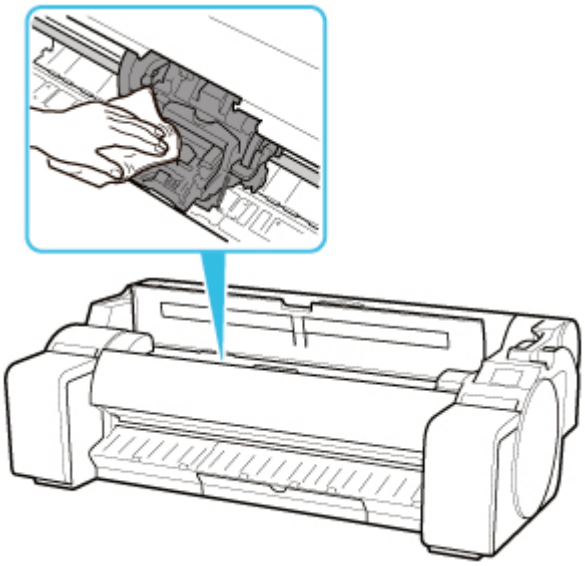

Important

- Do not touch the linear scale (A) or carriage shaft (B). Touching these may cause malfunction.

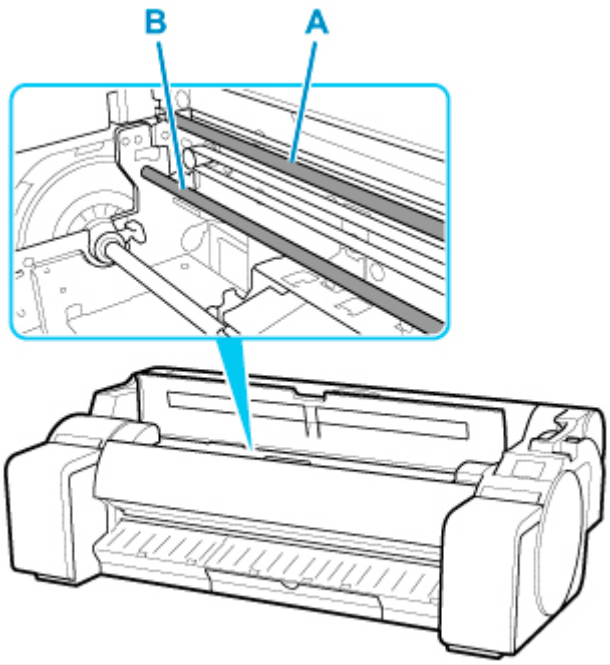

- Do not use tissue paper, paper towels, rough-textured cloth, or similar materials for cleaning so as not to scratch the surface.

6. Pull down print head lock lever toward the front while holding its center (C) with your fingertip.

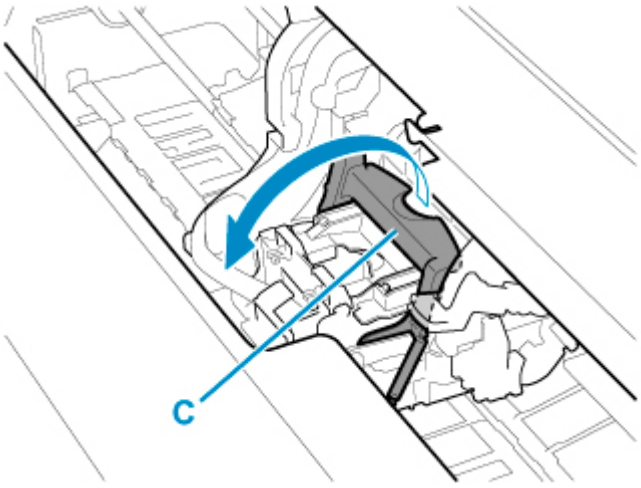

7. Grab grip (D) and open print head locking cover.

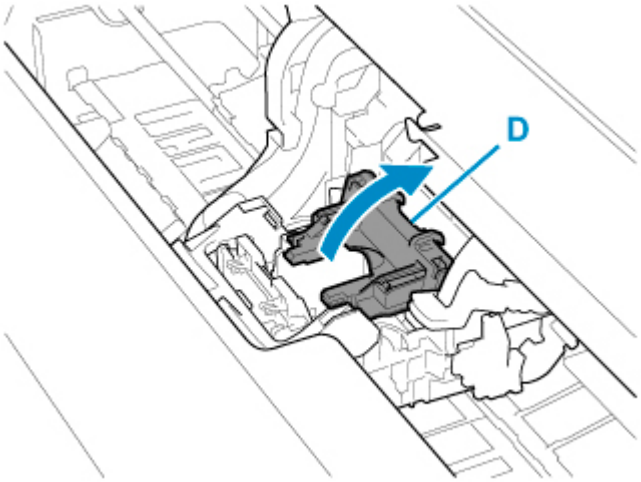

8. Grab grips (E), remove print head, and then tap **OK**.

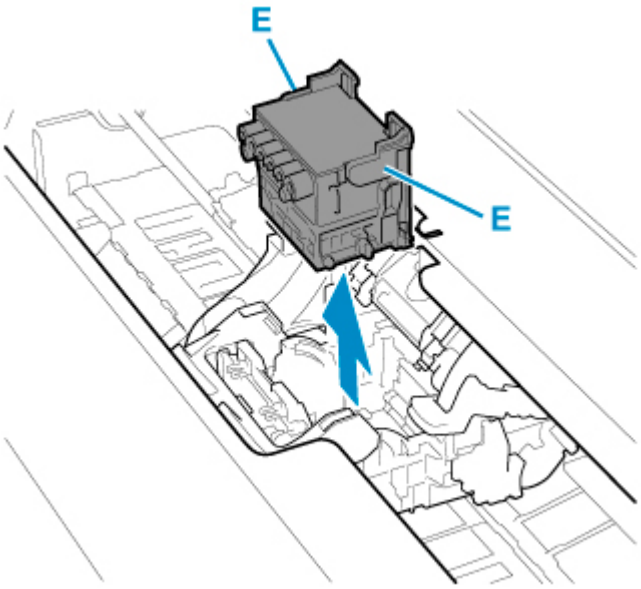

Important

- Never touch the metal contacts of the carriage. Furthermore, do not allow any dirt or debris to become adhered to the metal contacts of the carriage. These may damage the printer.

Note

- Dispose of the used print head in accordance with local regulations.

9. Take new print head out of its pouch by grabbing grips (E).

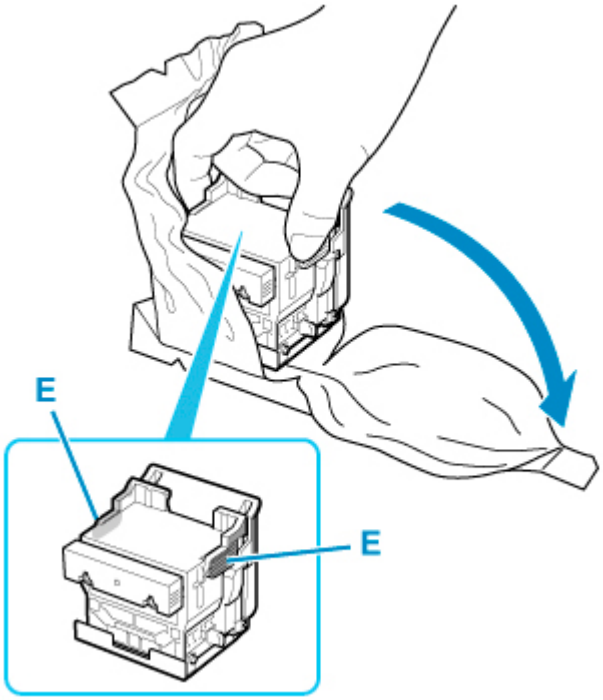

10. Remove orange protective caps (F, G).

Grab grip (H) to remove protective cap (G).

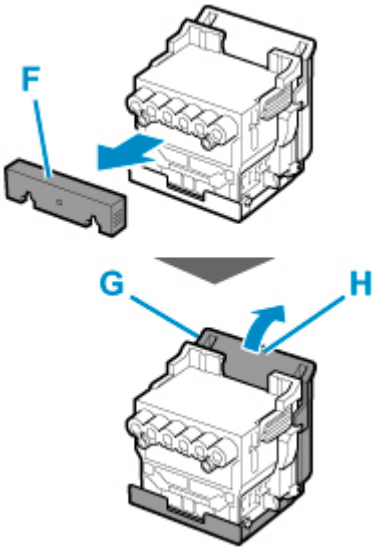

Important

- Always carry the print head by holding its right and left grips. Never touch nozzle (I) or metal contacts (J). This may damage the print head and affect printing quality.
- Never touch the ink holes (K). This may affect printing quality.

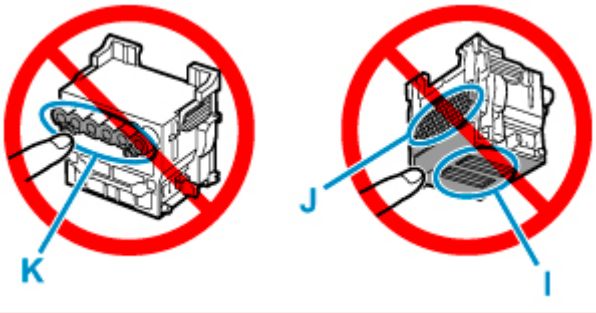

- The inside surface of the protective cap is coated with ink to protect the nozzle. Be careful not to touch these surfaces when removing the caps.
- The print head contains ink to protect the nozzle. We recommend removing the protective cap while holding it over the pouch that contained the print head or otherwise safely out of the way to avoid spilling ink and staining your clothes or the surrounding area. If ink accidentally spills, wipe off the ink with a dry cloth.
- If you need to put a print head somewhere temporarily before installation, do not set it down with the nozzles and metal contacts facing down. If the nozzles or metal contacts are damaged, it may affect the printing quality.
- Do not reattach the removed protective part. Dispose of these materials in accordance with local regulations.

11. Turn ink holes (K) toward the front and insert print head into carriage.

Insert the print head all the way into the carriage, while taking care to keep parts that were protected by the protective caps from touching the carriage.

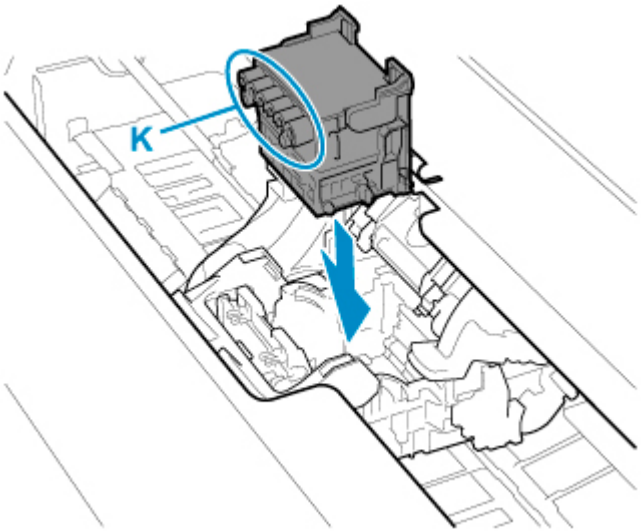

12. Grasp tab (D) of print head locking cover and lower it to front to lock print head.

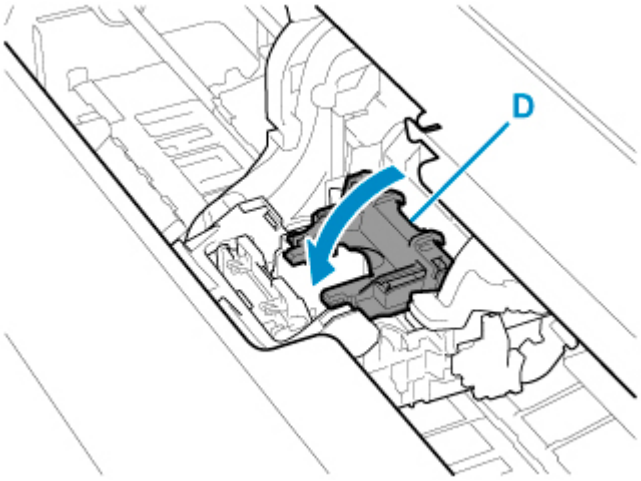

13. While holding center part (C) of print head lock lever, lower it toward back.

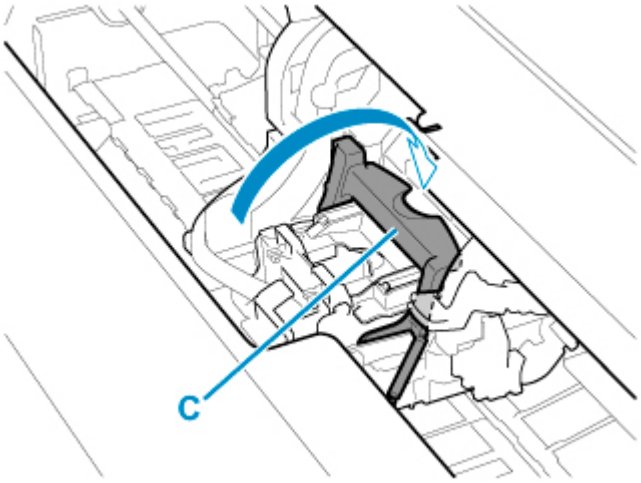

14. Align angle adjustment lever with the red square position.

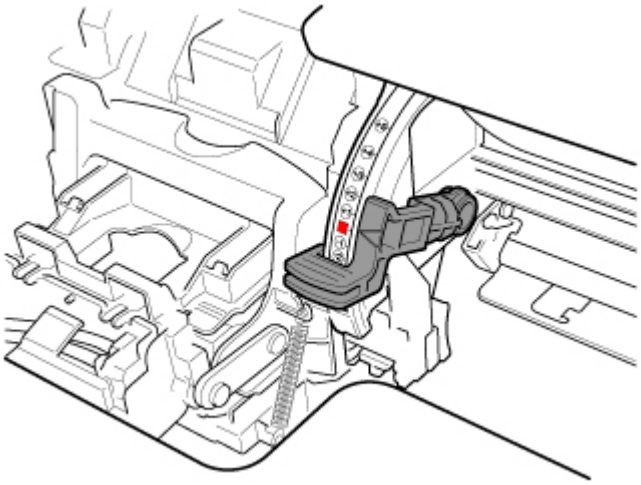

15. Close top cover.

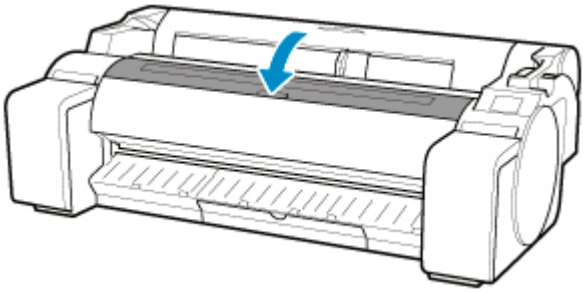

Ink now fills the print head. It takes about 10 minutes.

Important

- While ink is being filled, definitely do not remove the ink tank or maintenance cartridge. Ink may leak out.

Note

- Print head position adjustment is executed when **Print pattern after new head** is set to **ON**.

  Follow the instructions on the touch screen to load paper.

  Auto maintenance settings

Maintenance Cartridge

- Maintenance Cartridge
- Replacing the Maintenance Cartridge
- Checking the Remaining Maintenance Cartridge Capacity
- When to Replace the Maintenance Cartridge

Maintenance Cartridge

When purchasing, check the Model number.

Model number: MC-31

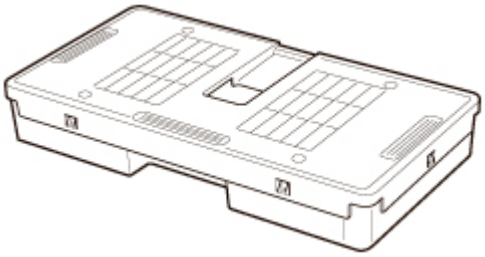

Note

- For instructions on replacing the maintenance cartridge, see Replacing the Maintenance Cartridge.

Replacing the Maintenance Cartridge

Compatible Maintenance Cartridges

For details on compatible maintenance cartridge, see Maintenance Cartridge.

Precautions When Handling Maintenance Cartridge

Take the following precautions when handling the maintenance cartridge.

Caution

- For safety, keep maintenance cartridge out of the reach of children.
- If ink is accidentally ingested, contact a physician immediately.

Important

- Do not remove the maintenance cartridge except to replace it. Ink may leak out.
- Do not remove a maintenance cartridge during initialization immediately after turning on the printer, during print head cleaning, while ink is being drawn out, or during initialization immediately after replacing the maintenance cartridge.

  The maintenance cartridge may become damaged or ink may leak out.
- To prevent ink from leaking from a used maintenance cartridge, avoid dropping the cartridge or storing it at an angle. Otherwise, ink may leak and cause stains.
- Ink adheres to the top of the maintenance cartridge after it has been used. Handle the maintenance cartridge carefully during replacement. The ink may stain clothing.

How to Replace a Maintenance Cartridge

If a message indicates you should replace a maintenance cartridge, check the message details and go to step 4.

1. Tap (Setup) > **Maintenance** on HOME screen.

   Touch Screen

   The **Maintenance** screen appears.

2. Tap **Maintenance cartridge info**.

   The **Maintenance cartridge info** screen appears.

3. Tap **Replace**.

   Instructions for the maintenance cartridge replacement procedure appear on the touch screen.

4. Open box, and remove plastic bag and maintenance cartridge.

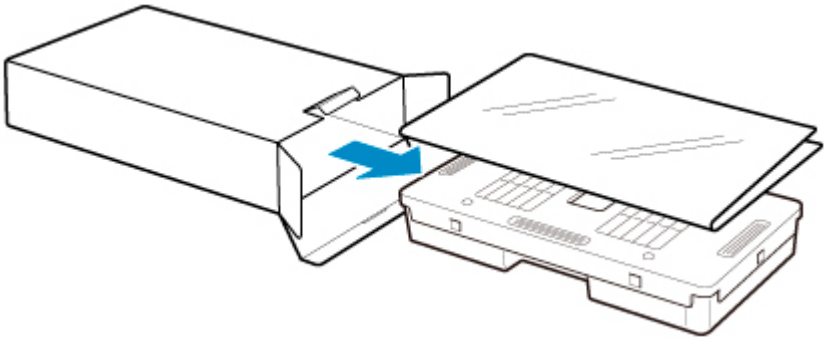

Important

- Never touch the metal contacts (A). This may damage the maintenance cartridge.

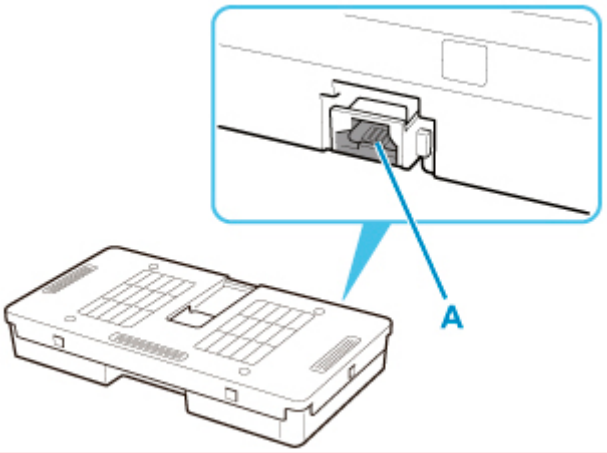

5. Open maintenance cartridge cover.

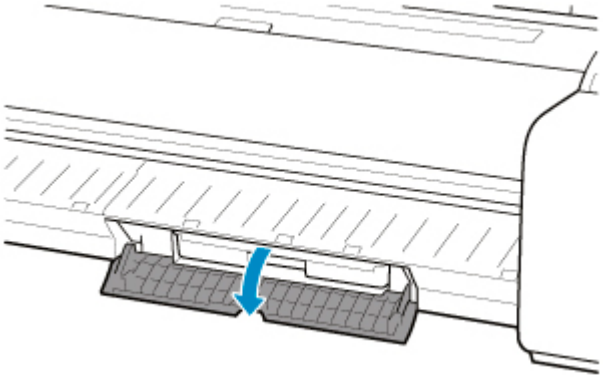

6. Hold the used maintenance cartridge by the grip (B) with one hand and put your other hand under the maintenance cartridge to hold it firmly on the bottom, keeping it level as you pull it out.

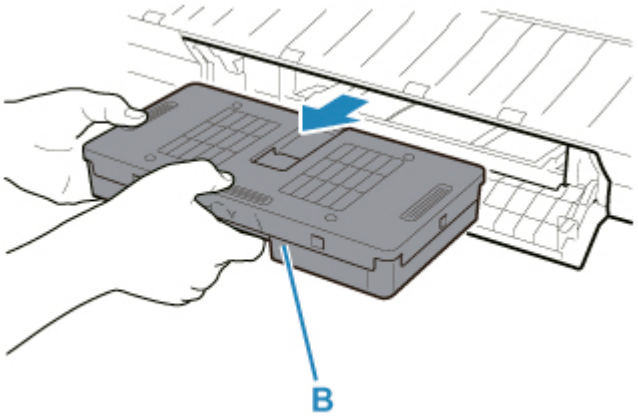

Important

- A used maintenance cartridge is heavy. Always grasp the cartridge firmly and keep the cartridge level during removal. If you drop a used maintenance cartridge or store it at an angle, ink may leak and cause stains.

7. Put used maintenance cartridge in supplied plastic bag and store on flat surface.

8. Check the top and bottom of the maintenance cartridge, place in the box, and store the box on a flat surface.

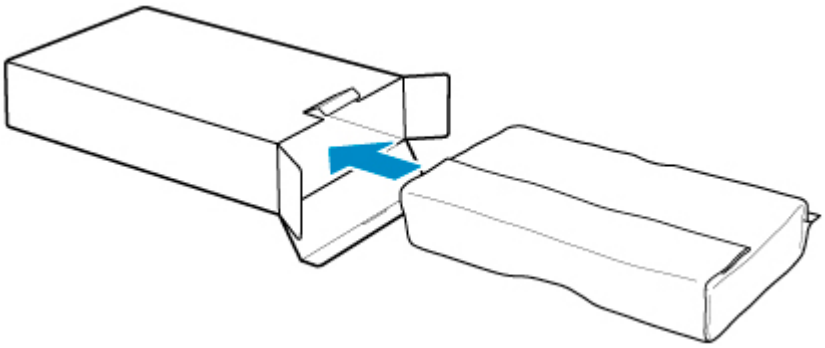

Important

- Always put the used maintenance cartridge back in the box and store the box on a flat surface.

Note

- Dispose of the used maintenance cartridge in accordance with local regulations.

9. Wipe away any soiling on the maintenance cartridge cover.

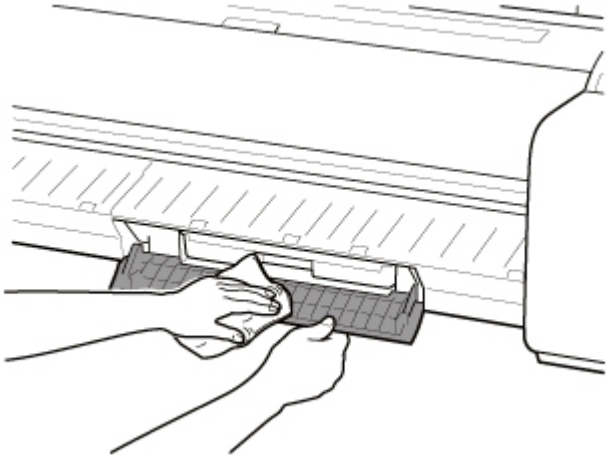

Important

- Support the maintenance cartridge cover from underneath as you wipe it.

10. Keeping the new maintenance cartridge level, insert it all the way in.

The maintenance cartridge is initialized.

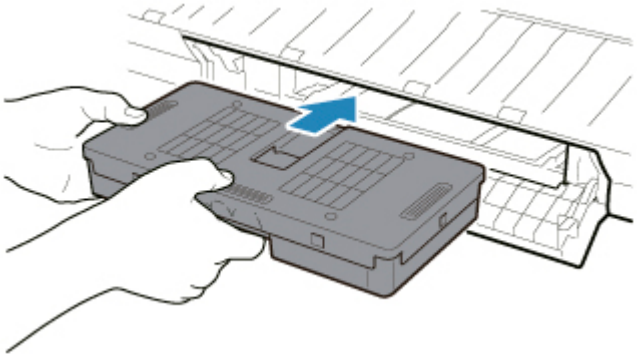

Important

- Do not remove the maintenance cartridge during initialization immediately after replacing the maintenance cartridge. The maintenance cartridge may become damaged.

11. Close maintenance cartridge cover.

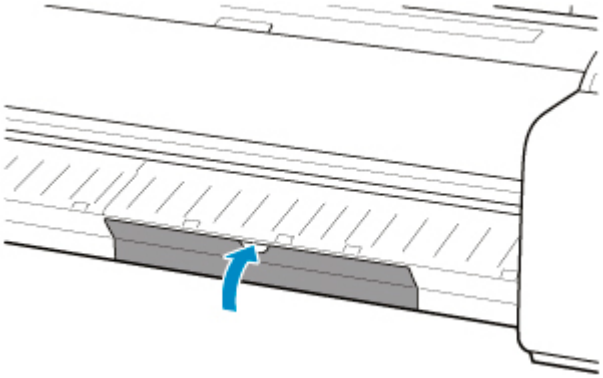

Checking the Remaining Maintenance Cartridge Capacity

The maintenance cartridge absorbs excess ink from borderless printing and print head cleaning. You can confirm the remaining capacity of the maintenance cartridge by checking the touch screen.

1. Tap (Setup) > **Maintenance** on HOME screen.

   Touch Screen

   The **Maintenance** screen appears.

2. Tap **Maintenance cartridge info**.

   The **Maintenance cartridge info** screen appears.

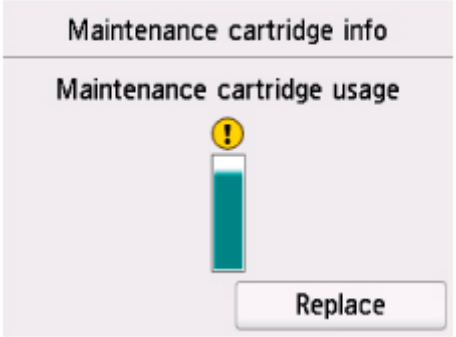

If the touch screen indicates to replace the maintenance cartridge, replace the maintenance cartridge.

If a message appears indicating to check the remaining capacity of the maintenance cartridge, or before tasks that deplete much of the capacity such as head cleaning or preparations to move the printer, check the remaining maintenance cartridge capacity and prepare a new maintenance cartridge as needed.

Replacing the Maintenance Cartridge

When to Replace the Maintenance Cartridge

Replace or prepare to replace the maintenance cartridge in the following situations.

- **If maintenance cartridge confirmation message appears on touch screen**

  When the maintenance cartridge is almost used up, the **Status** lamp lights orange and a notification message will appear on the touch screen. You can continue to print, but check the remaining maintenance cartridge capacity and prepare to replace the maintenance cartridge with a new one.

  Checking the Remaining Maintenance Cartridge Capacity

- **When the maintenance cartridge capacity is drastically depleted**

  Print head cleaning, print head replacement, and preparations to transfer the printer deplete much of the maintenance cartridge capacity. (In particular, preparing to move the printer depletes a lot of the capacity.)

  Check the remaining maintenance cartridge capacity before this maintenance and replace the maintenance cartridge if necessary.

- **If message for maintenance cartridge replacement appears on touch screen**

  When the maintenance cartridge is used up, the **Status** lamp blinks orange, a message regarding maintenance cartridge replacement appears on the touch screen, and printing is disabled. Replace the maintenance cartridge with a new one.

Cutter Blade

- Cutter Blade
- Replacing the Cutter Blade

Cutter Blade

When purchasing, check the Model number.

Model number: CT-08

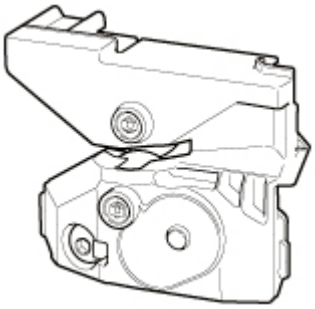

Note

- For instructions on replacing the cutter blade, see Replacing the Cutter Blade.

Replacing the Cutter Blade

Compatible Cutter Blade

For details on compatible cutter blade, see Cutter Blade.

How to Replace Cutter Blade

1. Tap (Setup) > **Maintenance** on HOME screen.

   Touch Screen

   The **Maintenance** screen appears.

2. Tap **Replace cutter blade unit**.

   A confirmation message appears.

3. Tap **Yes**.

   The carriage moves and after it stops moving, instructions for the cutter blade replacement procedure appear on the touch screen.

4. If cutter blade is dirty, use damp cloth that you have wrung out completely to wipe it clean.

   Important

   - Do not use tissue paper, paper towels, rough-textured cloth, or similar materials for cleaning so as not to scratch the surface.

5. Turn hex screw with hex wrench until loose.

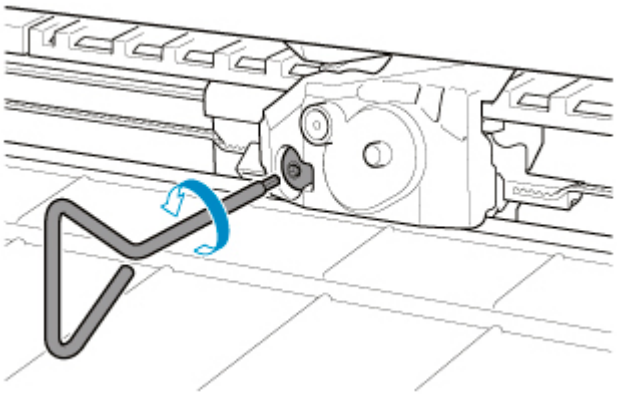

6. Remove cutter blade while holding A.

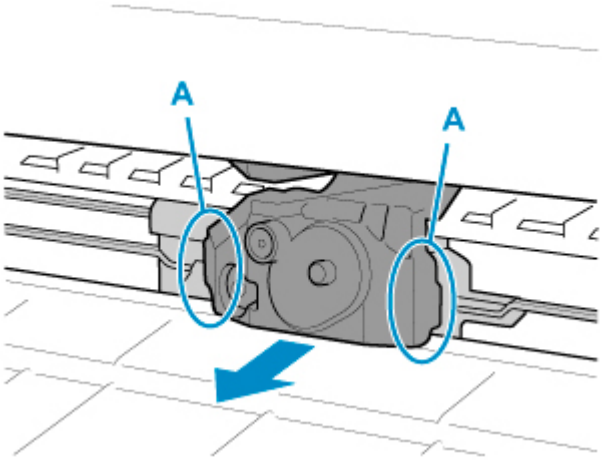

Caution

- Never touch any part other than A. This may stain your hands or cause injury. Additionally, this may damage the printer.
- Do not disassemble the cutter blade. Touching the blade may cause injury.

Note

- Dispose of the used cutter blade in accordance with local regulations.

7. Install new cutter blade while aligning B to C and D to E.

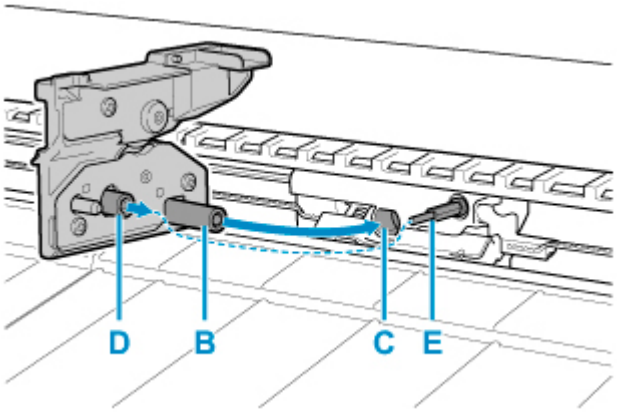

8. Turn hex screw until securely fixed.

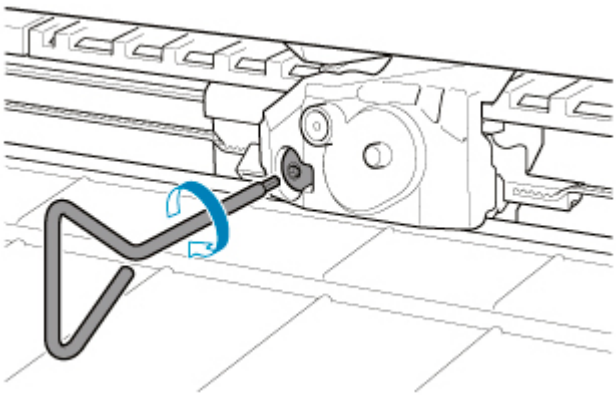

Important

- After the cutter blade is secured, check that the cutter blade does not come off. If the cutter blade comes off, this may damage the printer.

9. Tap **Done**.

10. Tap **Yes**.

Performing Maintenance Functions from Your Computer (macOS)

- Opening Remote UI for Maintenance
- Cleaning the Print Heads
- Printing a Nozzle Check Pattern

Opening Remote UI for Maintenance

You can perform maintenance of printer and change the settings from a Remote UI.
The following is the procedure to open a Remote UI.

1. Open **System Preferences**, and select **Printers & Scanners**

2. Select your model from the printer list, and click **Options & Supplies...**

3. Click **Show Printer Webpage...** in **General** tab

   Remote UI starts.

   Note

   - The password may have to be entered after Remote UI starts. In such a case, enter the password and click **OK**. In case you do not know the password, see "Password and Cookie."

Related Topics

- Cleaning the Print Heads
- Printing a Nozzle Check Pattern
- Checking the Ink Status from Your Computer
- Updating Media Information in Printer Driver
- Correcting Media Information in Printer Driver (When Printer Used in Shared Environment)
- Confirm the Printer Paper Information

Cleaning the Print Heads

The print head cleaning and Cleaning functions allow you to clear up clogged print head nozzle. Perform print head cleaning if printing is faint or a specific color fails to print, even though there is enough ink.
If you perform Cleaning and the condition still does not improve, perform system cleaning.

The procedure for cleaning is as follows:

Cleaning

1. Select **Utilities** from Remote UI

2. Click **Cleaning**

   Before running the cleaning, check the following items:

   Check that the printer power is on. Then open the ink tank cover.
   Check the following items for each ink. Then, if necessary, perform **Cleaning**.

   - Is there ink remaining in the tank?
   - Is the ink tank attached properly?
     If the ink lamp is not lit, remove it and attach it again.
   - Did you install the ink tanks in their correct positions?

3. Execute cleaning

   Click **Yes**.

   Print head cleaning starts.

4. Check the results

   Check the print results.
   If cleaning the head once does not resolve the print head problem, clean it once more.

Important

- **Cleaning** consumes a small amount of ink.
  Cleaning the print head frequently will rapidly deplete your printer's ink supply. Consequently, perform cleaning only when necessary.

Deep cleaning

Deep cleaning is more thorough than cleaning. Perform deep cleaning when two **Cleaning** attempts do not resolve the print head problem.

1. Select **Utilities** from Remote UI

2. Click **Deep cleaning**

   Before running the deep cleaning, check the following items:

Check that the printer power is on. Then open the ink tank cover.
Check the following items for each ink. Then, if necessary, perform **Deep cleaning**.

- Is there ink remaining in the tank?
- Is the ink tank attached properly?
  If the ink lamp is not lit, remove it and attach it again.
- Did you install the ink tanks in their correct positions?

3. Execute deep cleaning

   Click **Yes**.

   Print head deep cleaning starts.

4. Check the results

   Check the print results.

Important

- **Deep cleaning** consumes a larger amount of ink than **Cleaning**.
  Cleaning the print head frequently will rapidly deplete your printer's ink supply. Consequently, perform cleaning only when necessary.

System cleaning

Execute **System cleaning** if the status does not improve even after **Deep cleaning** is performed.

1. Select **Utilities** from Remote UI

2. Click **System cleaning**

   Before running the system cleaning, check the following items:

   Check that the printer power is on. Then open the ink tank cover.
   Check the following items for each ink.

   - Is there ink remaining in the tank?
   - Is the ink tank attached properly?
     If the ink lamp is not lit, remove it and attach it again.
   - Did you install the ink tanks in their correct positions?

   In addition, **System cleaning** consumes an extremely large amount of ink.
   Before executing this function, check the items below. Then, if you feel it necessary, execute **System cleaning**.

   - Did you use **Print nozzle check pattern** to check the nozzle status and was there a problem?
   - Did the status remain unchanged even after **Deep cleaning** was executed?

3. Execute system cleaning

   Click **Yes**.

   System cleaning starts.

4. Check the results

Check the print results.

Important

- **System cleaning** consumes an extremely large amount of ink.
  Executing system cleaning frequently will rapidly deplete your printer's ink supply. Therefore, execute system cleaning only when necessary.

Related Topic

- Printing a Nozzle Check Pattern

Printing a Nozzle Check Pattern

The nozzle check function allows you to check whether the print head is working properly by printing a nozzle check pattern. Print the pattern if printing becomes faint, or if a specific color fails to print.

The procedure for printing a nozzle check pattern is as follows:

Print nozzle check pattern

1. Select **Utilities** from Remote UI

2. Click **Print nozzle check pattern**

   Before printing the nozzle check pattern, check the following items:

   Check that the printer power is on. Then open the ink tank cover.
   Check the following items for each ink. Then, if necessary, perform **Print nozzle check pattern**.

   - Is there ink remaining in the tank?
   - Is the ink tank attached properly?
     If the ink lamp is not lit, remove it and attach it again.
   - Did you install the ink tanks in their correct positions?

3. Print a nozzle check pattern

   Click **Yes**.
   Printing of the nozzle check pattern begins.

4. Check the print result

   Check the print result.

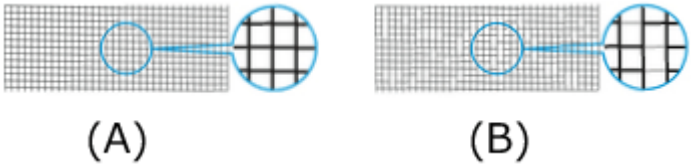

   (A) As long as the horizontal lines are in line, and not missing, the nozzle is working normally.
   (B) Where the horizontal lines are not in line or are missing, the color nozzle is blocked.

   From the nozzle check pattern printing results, if it becomes patchy or there are areas that cannot be printed, clean the print heads from **Cleaning**.

Related Topic

- Cleaning the Print Heads

Cleaning the Printer

- Cleaning the Printer Exterior
- Cleaning Inside the Top Cover
- Cleaning the Print Head

Cleaning the Printer Exterior

Clean the printer regularly to maintain better printing quality and help prevent problems.

To ensure a comfortable working environment, clean the printer exterior about once a month.

1. Turn printer off.

   Turning the Printer On and Off

2. Unplug power cord from outlet.

   Caution

   - Always turn off the printer and unplug the power cord before cleaning or maintenance. Accidentally leaving the printer on poses a risk of injury if you touch moving parts inside the printer.

3. Wring out soft cloth with water or watered-down neutral detergent, and use it to wipe off dirt.

   Clean the printer exterior and the power cord plug.

   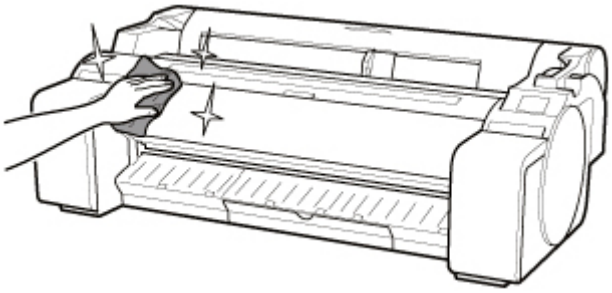

   Warning

   - Never use flammable solvents such as alcohol, benzene, or thinner. If these substances come into contact with electrical components inside the printer, there is a risk of fire or electrical shock.

   Important

   - If the output guide is dirty, it may soil the edge of the paper when the paper is cut. We recommend cleaning the output guide even if it does not appear dirty, because it may actually be covered with paper dust.

     Cleaning Inside the Top Cover

   - Do not use tissue paper, paper towels, rough-textured cloth, or similar materials for cleaning so as not to scratch the surface.
   - When neutral detergent is used, be sure to wipe off the detergent with soft cloth with water.

4. When dirt is wiped off, wipe off water with dry soft cloth.

5. Plug power cord into outlet.

Cleaning Inside the Top Cover

Clean inside the top cover about once a month to maintain better printing quality and help prevent problems.

Also clean inside the top cover in the following situations to ensure optimal operation.

- If the printed surface or the underside of paper is dirty after printing
- After you have used up a roll
- After borderless printing
- After printing on small paper
- After printing on paper that generates a lot of cutting debris
- If you have replaced the roll
- After printing on paper that generates a lot of paper dust
- After printing on adhesive paper

Important

- If the platen inside the top cover becomes dirty, it may soil the underside of paper. We recommend cleaning the platen after borderless printing or printing on small paper.
- If the output guide is dirty, it may soil the edge of the paper when the paper is cut. We recommend cleaning the output guide even if it does not appear dirty, because it may actually be covered with paper dust.
- Printing on adhesive paper may leave adhesive on the platen, paper retainer, or other parts. To prevent paper jams, we recommend cleaning inside the top cover after printing.

1. Tap (Setup) > **Maintenance** on HOME screen.

Touch Screen

The **Maintenance** screen appears.

2. Tap **Platen cleaning**.

A confirmation message appears.

3. Tap **Yes**.

The carriage moves and after it stops moving, instructions appear on the touch screen.

4. Open top cover.

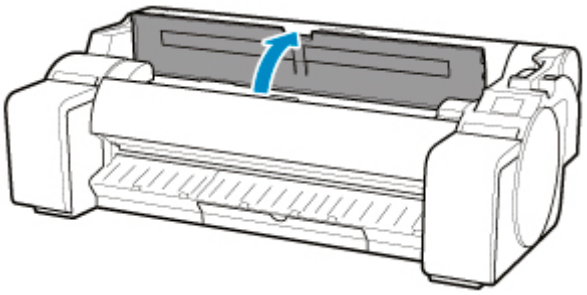

5. If paper dust has accumulated in vacuum holes (A) on platen or in borderless printing ink grooves (B), use cleaning brush (C), provided with printer, to wipe it away.

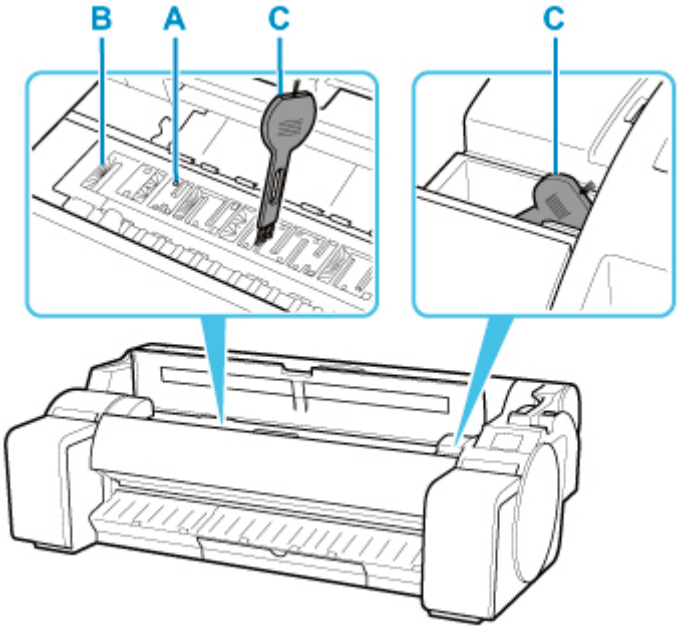

Important

- Do not touch the linear scale (D) or carriage shaft (E). Touching these may cause malfunction.

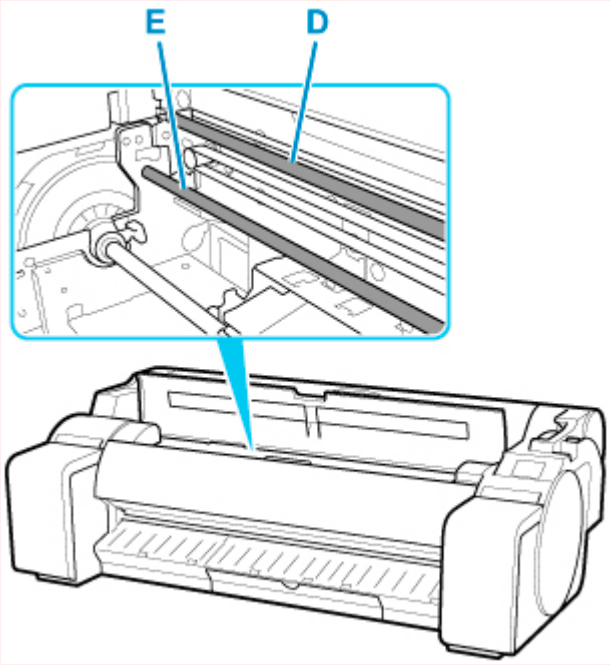

Note

- If the cleaning brush is dirty, rinse it in water.

6. Using a damp cloth that you have wrung out completely, wipe inside the top cover to clean it.

Wipe away any ink residue and paper dust (debris from cutting) on entire platen (F), paper retainer (G), borderless printing ink grooves (H), and output guide (I), and so on.

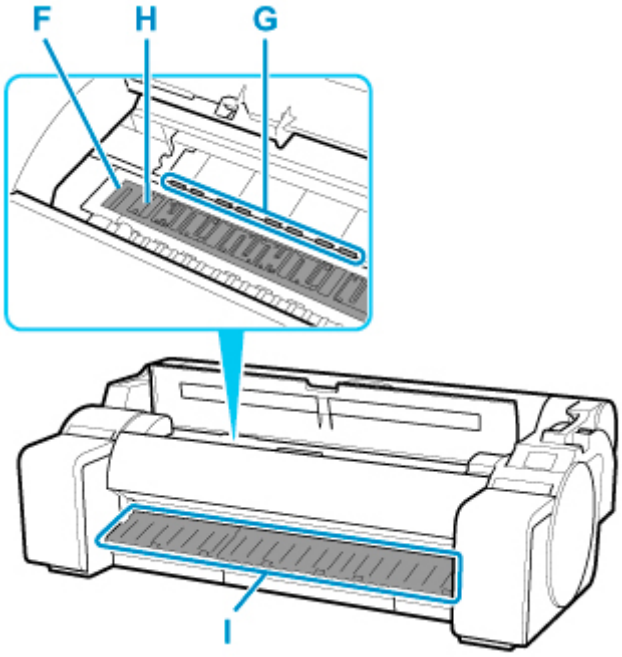

Warning

- Never use flammable solvents such as alcohol, benzene, or thinner. If these substances come into contact with electrical components inside the printer, there is a risk of fire or electrical shock.

Important

- Do not use a dry cloth to wipe inside the top cover. This may create a static charge, which may attract dust and affect the printing quality.
- Do not use tissue paper, paper towels, rough-textured cloth, or similar materials for cleaning so as not to scratch the surface.

Note

- When cleaning between the platen and ejection guide, use a damp cloth that you have wrung out completely to wipe over the output tray and along grooves.

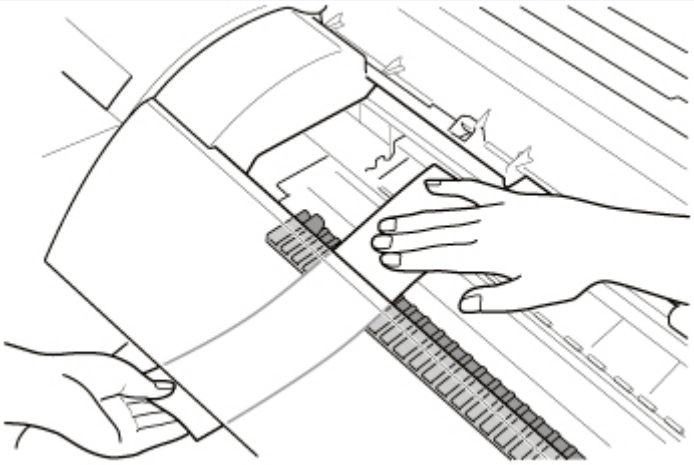

2. Close top cover.

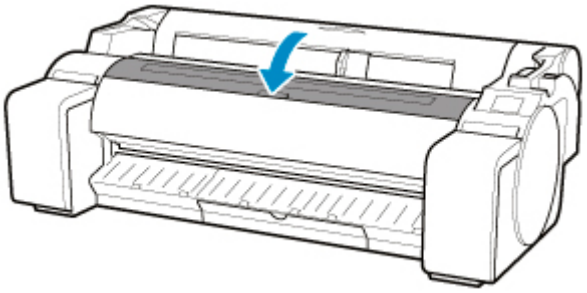

Other Maintenance

- Preparing to Transfer the Printer
- Reinstalling the Printer
- Firmware update

Preparing to Transfer the Printer

To protect the internal parts in transit, always follow these steps before transferring the printer to a new location.

For details on packing the printer and installing it after transfer, see Reinstalling the Printer.

Important

- Avoid tilting the printer excessively in transit. This may cause ink in the printer to leak and cause stains.

Note

- The maintenance cartridge replacement may be required when you execute the **Prepare to move** menu. Prepare the maintenance cartridge in advance while referring below. The number of maintenance cartridge required varies depending on the amount remaining in the maintenance cartridge being used.
- If you can move the printer in a level state using casters or something similar, you do not need to execute **Prepare to move**.
- Always follow the instructions of the service representative when preparing to transfer the printer.

  The following lists transport restrictions by type of transport.

  Move on the same floor

  Usage Examples: Move indoors by carrying

  - Transport and storage in low temperature environments: No
  - Required maintenance cartridges: 1

  Transport outdoors

  Usage Examples: Transport by vehicle

  - Transport and storage in low temperature environments: Yes
  - Required maintenance cartridges: 1

Preparing for Transportation

1. Remove the paper.
   - Rolls

     Removing the Roll from the Printer
   - Sheet

     Removing Sheets

2. If touch screen indicates to replace maintenance cartridge, replace maintenance cartridge.

   Replacing the Maintenance Cartridge

3. Tap (Setup) > **Maintenance** on HOME screen.

   Touch Screen

   The **Maintenance** screen appears.

4. Tap **Prepare to move**.

5. Tap **Move on the same floor** or **Transport outdoors**.

   A confirmation message appears.

6. Tap **Yes**.

   The printer is now prepared for transfer.

   When the preparation is finished, a message prompting you to open the ink tank cover appears on the touch screen.

   Important

   - If consumables must be replaced, a message appears on the touch screen, and preparation is disabled. If the message appears, tap **OK** and contact your Canon dealer for assistance.

7. Open ink tank cover to remove all ink tanks.

   Replacing Ink Tanks

8. Push all ink tank lock levers closed until they click into place.

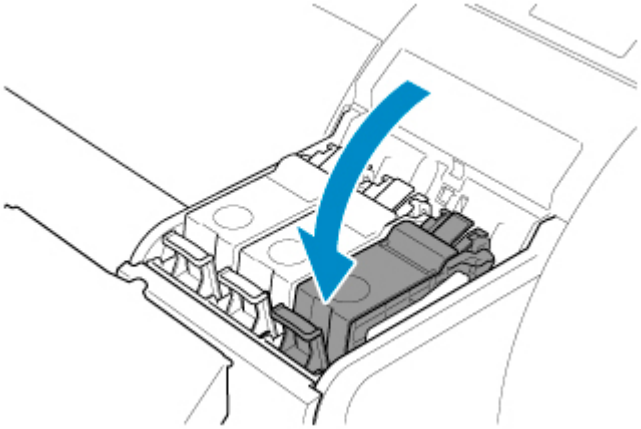

9. Close ink tank cover.

   Ink is now drawn into the maintenance cartridge.

   A confirmation message will appear when the process is finished.

   Important

   - Do not remove the maintenance cartridge except when the message indicating replacement is displayed.

If you remove the maintenance cartridge while ink is being removed, the ink may leak out.

10. Press **ON** button and turn off printer.

Packing Printer

1. Disconnect power cord and interface cable.

Important

- Turn off the printer before you unplug it. Unplugging the printer before it is off and moving it may damage the printer. If you accidentally unplug the printer, plug it in again, reinstall the ink tanks, and follow this procedure again.

2. Tape down printer covers to secure them, in the reverse order of tape removal during installation.

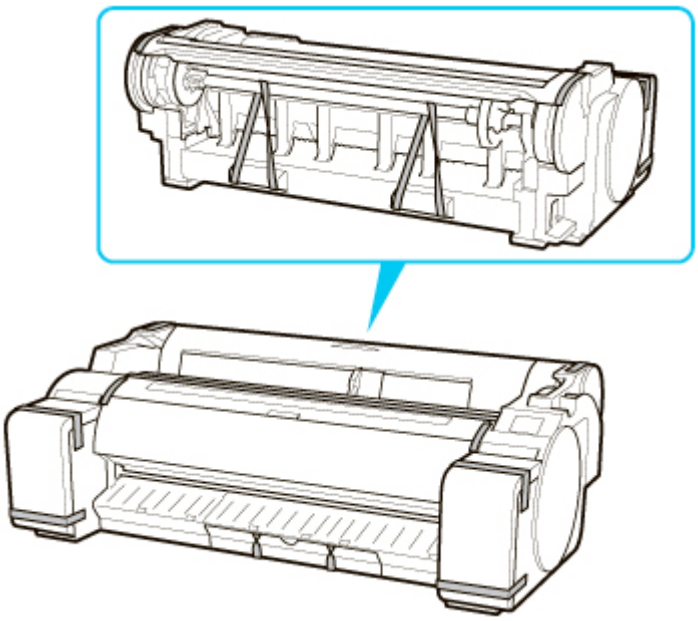

3. Remove the stand by reversing the installation procedure, when it was attached to the printer.

4. Disassemble and repackage the stand by following the installation procedure in reverse.

5. Repack roll holder, holder stopper, and printer in shipping materials, and then package them in shipping box.

Reinstalling the Printer

The basic workflow for reinstalling the printer is as follows.

For detailed instructions, see the Setup Guide.

Assemble the stand (Option)

1. To use the optional stand, assemble the stand by referring to the Printer Stand Setup Guide that was provided with the stand.

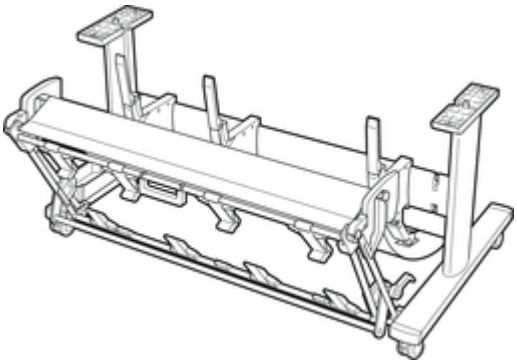

Caution

- The stand must be assembled by at least two people on a flat surface. Attempting assembly by yourself poses a risk of injury or bending the Stand.
- When assembling the stand, lock all four of the casters. Attempting to move the stand when the casters are locked poses a risk of injury or damage to the location site.
- Before moving the assembled stand, lift the support rod to the position shown (A) and unlock all four casters. Moving the stand with the support rod lowered or the casters locked may cause injury or damage the area of installation or basket cloth.

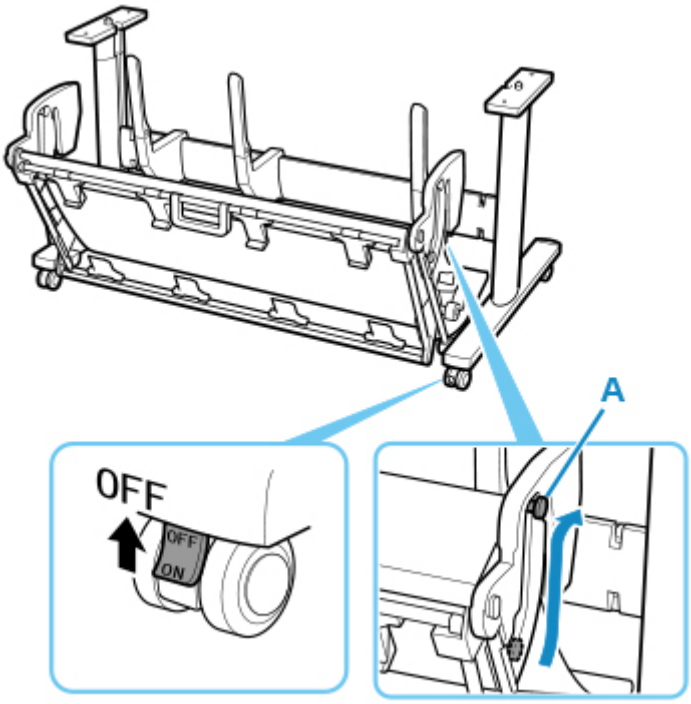

Install the printer

1. Mount the printer on the assembled stand and tighten the screws firmly.

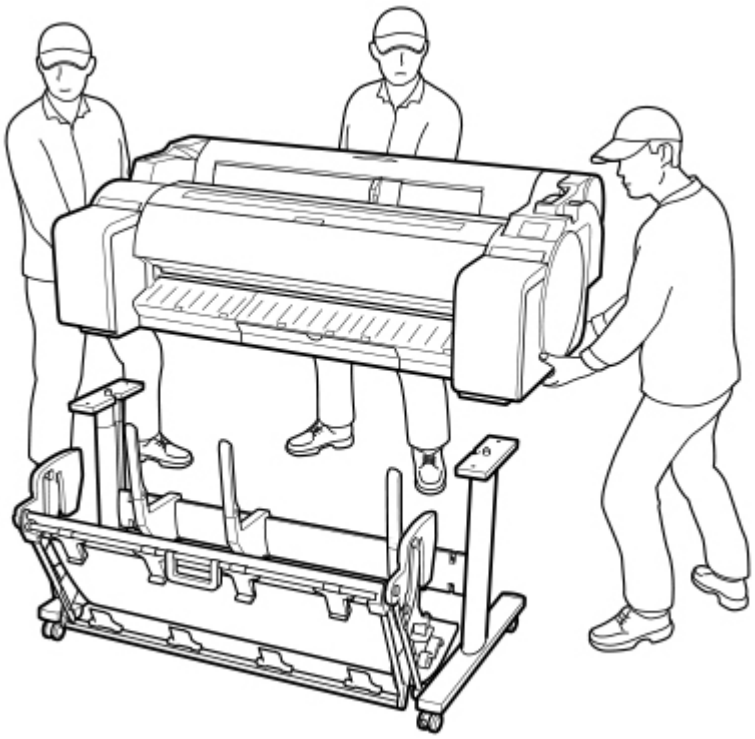

⚠ Caution

- Moving the printer requires at least three people. Be careful to avoid back strain and other injuries.

- When moving the printer, firmly grasp the carrying grips. The printer may be unsteady if you hold it at other positions, which poses a risk of injury from dropping the printer.

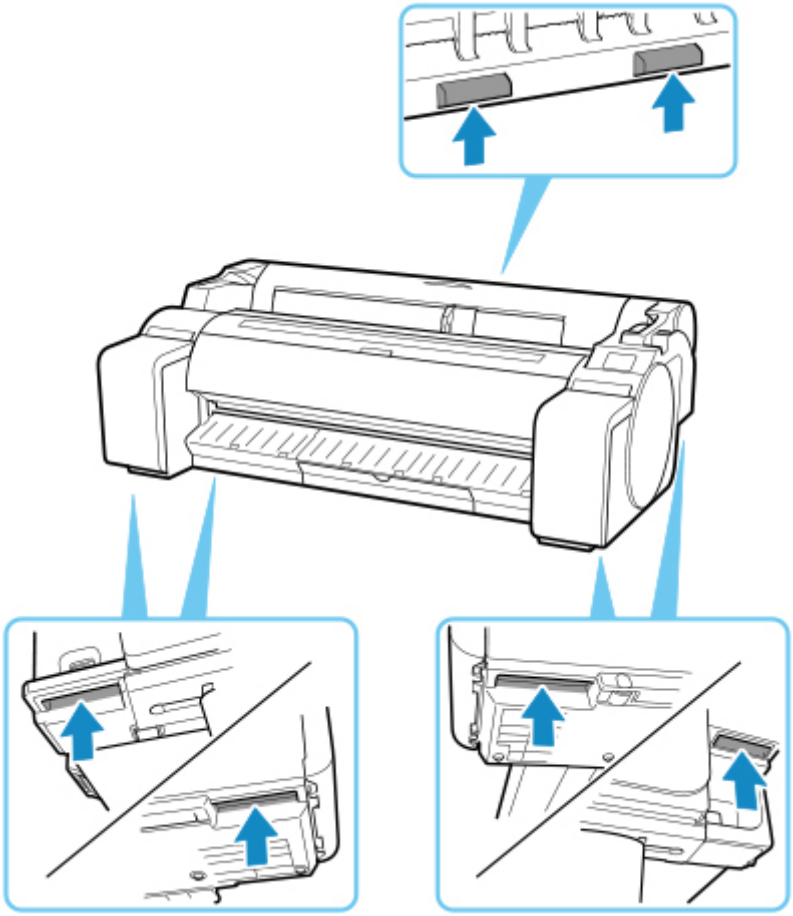

- When placing the printer on the stand, lock all four of the casters of the stand. Attempting to place the printer on the stand while the casters are not locked poses a risk of injury.

2. Remove tape and packaging material attached to the printer.

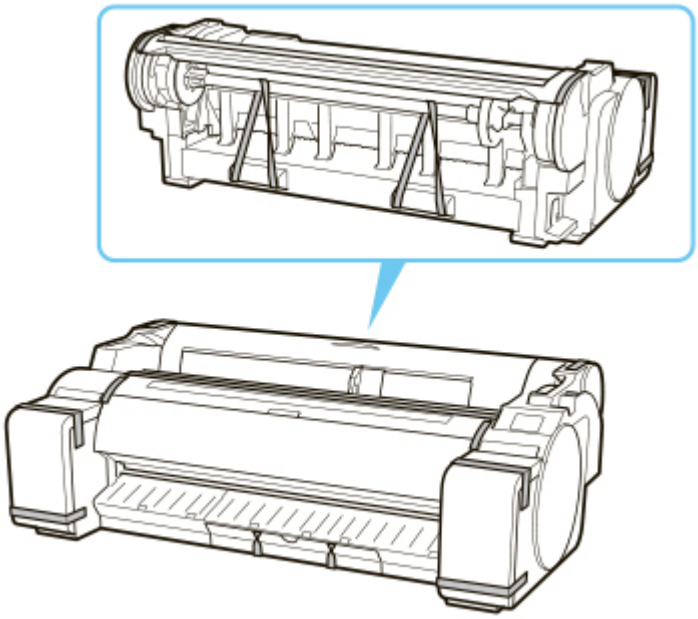

3. Connect the power cord to the power cord connector on the right side of the printer.

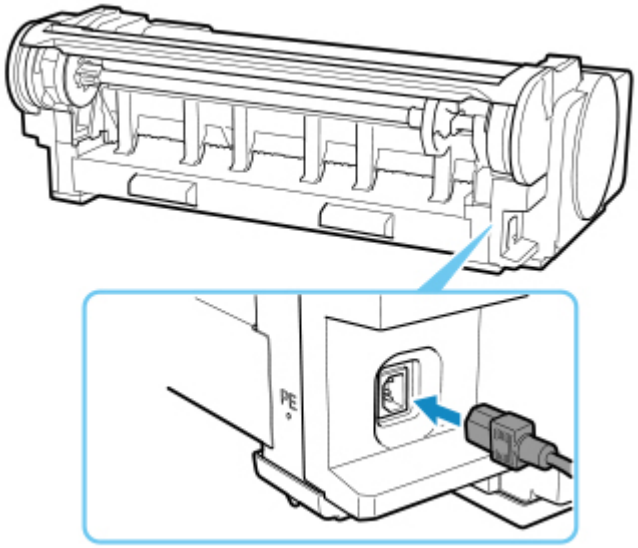

4. Plug the power cord into the outlet.

5. Press **ON** button to turn on printer.

   When "**Install the printer here? Do not install the ink tanks yet.**" appears, tap **Yes**.

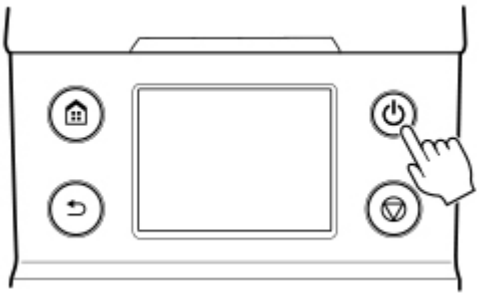

6. When instructions for loading ink tank appear on operation panel, open ink tank cover and load ink tank.

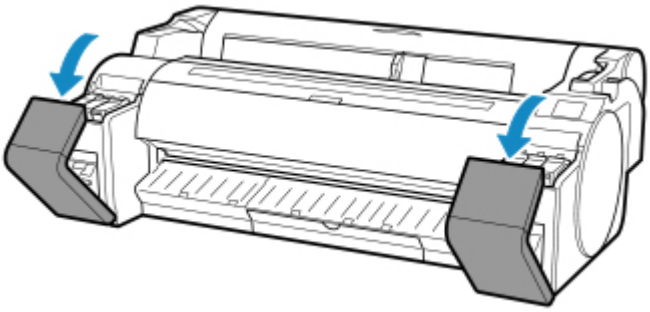

7. Loading Rolls on the roll holder

   (See "Loading Rolls on the Roll Holder.")

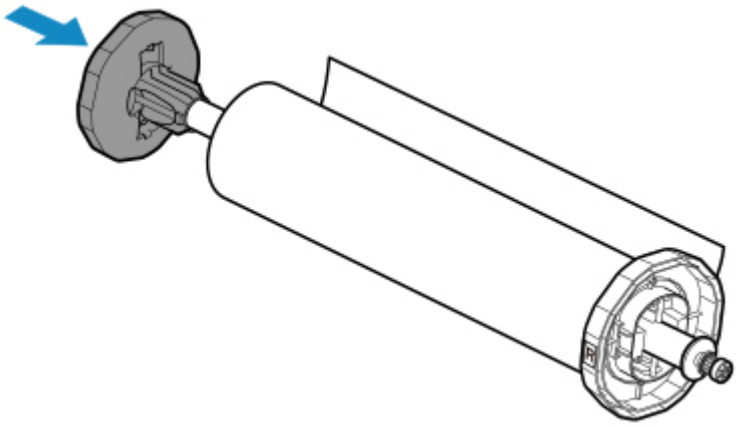

8. Load the Roll Media in the printer.

(See "Loading Rolls in the Printer.")

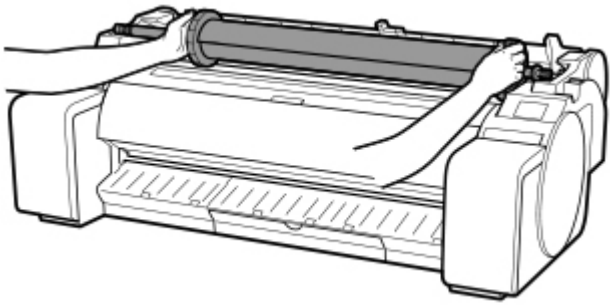

9. Install the software.

Note that the driver installation procedure varies depending on the type of connection.

(See "Installing the Printer Driver" (Windows).)

(See "Installing the Printer Driver" (macOS).)

Important

- When the printer is connected to a network (via TCP/IP), the printer's IP address may be changed if you reinstall the printer.

  In this case, be sure to reconfigure the printer's IP address.

Firmware update

This setting item is displayed by tapping **Device settings** after tapping (**Setup**) on the HOME screen.

Important

- The administrator password is required to change settings if it is enabled for changing settings using the operation panel.

You can update the firmware of the printer, check the firmware version, or perform settings of a notification screen, a DNS server and a proxy server.

Note

- If LAN is disabled, you can not use **Install update**, **DNS server setup**, **Proxy server setup**.

- **Install update**

  Performs the firmware update of the printer. If you select **Yes**, the firmware update starts. Follow the on-screen instructions to perform update.

  ### Important

  - When you use this function, make sure the printer is connected to the Internet.

  ### Note

  - If the firmware update is not complete, check the following and take an appropriate action.
    - Check the network settings such as a wireless router.
    - If **Cannot connect to the server.** is displayed on the touch screen, select **OK** and try again after a while.

- **Check current version**

  You can check the current firmware version.

- **Update notification setting**

  When **Yes** is selected and the firmware update is available, the screen to inform you of the firmware update is displayed on the touch screen.

- **DNS server setup**

  Performs settings for a DNS server. Select **Auto setup** or **Manual setup**. If you select **Manual setup**, follow the display on the touch screen to perform settings.

- **Proxy server setup**

  Performs settings for a proxy server. Follow the display on the touch screen to perform settings.

Specifications

- Specifications
- Print Area

Specifications

Important

- The following values may vary depending on the operating environment.

Printer

Power supply	100-240 V AC (50/60 Hz)
Power consumption	**When printing:** 69 W max. *1 **In Sleep mode:** 3.6 W max. *1 **Standby (all ports connected):** 3.6 W max. **When power is off:** 0.3 W max. *2 *1 Wired LAN connection *2 The printer uses a trace amount of power even when turned off. To stop all power consumption, turn off the printer and unplug the power cord.
Operating environment	**Temperature:** 59 to 86 °F (15 to 30 °C) **Humidity:** 10 to 80 % RH (with no condensation)
Dimensions (W x D x H)	**Printer and Stand SD-32 (Extended position A):** Approx. 50.8 x 35 x 41.8 inches (1289 x 887 x 1060 mm) **Printer and Stand SD-32 (Extended position B):** Approx. 50.8 x 43.4 x 41.8 inches (1289 x 1100 x 1060 mm) For Extended position, see Using the Basket. Actual basket shipped with printer device may vary according to region.
Weight	**Printer and Stand SD-32 (without print head and ink tanks):** Approx. 132 lb (60 kg)
Space for installation (W x D x H)	**Printer and Stand SD-32:** Approx. 66.5 x 67 x 53.6 inches (1689 x 1700 x 1360 mm)

Printing performance

Print method	Bubblejet
Maximum resolution	2400 dpi (horizontally) * x 1200 dpi (vertically) * Prints with a minimum 1/2400 inch dot pitch between ink droplets.
Print head	PF-06
Number of nozzles	MBK: 5120 nozzles, others: each 2560 nozzles

Memory

Memory	2 GB

Interface

You can use both USB and LAN at the same time.

You cannot use Wi-Fi and wired LAN at the same time.

USB	Hi-Speed USB * * To use Hi-Speed USB, your computer must support Hi-Speed USB. Additionally, the Hi-Speed USB interface is completely backward compatible with USB 1.1, so the printer can be connected even if the computer interface is USB 1.1.
LAN	**Wired LAN:** IEEE802.3ab (1000BASE-T) / IEEE802.3u (100BASE-TX) / IEEE802.3 (10BASE-T) **Wi-Fi:** IEEE802.11n / IEEE802.11g / IEEE802.11b

Network Specifications

Communication protocol	SNMP (Canon-MIB compatible), HTTP, TCP/IP (IPv4/IPv6), FTP
Wired LAN specifications	**Compliance standards:** IEEE802.3ab (1000BASE-T) / IEEE802.3u (100BASE-TX) / IEEE802.3 (10BASE-T) **Transmission speed:** 10 Mbps / 100 Mbps / 1000 Mbps (automatically selected)
Wi-Fi specifications	**Compliance standards:** IEEE802.11n / IEEE802.11g / IEEE802.11b **Frequency range:** 2.4 GHz **Channels:** 1-11 or 1-13 * * Varies by country and region. **Effective range:** Indoors 164 feet/50 m * * Varies according to environmental conditions. **Security:** WEP (64/128 bits) WPA-PSK (TKIP/AES) WPA2-PSK (TKIP/AES) **Setup:** WPS (push button method/PIN code method) WCN (WCN-NET) Easy wireless connect **Other:** Admin password

Operating Conditions

If operating conditions of the operating system are high, follow those.

Windows

Compatible Operating System (Standard supplied printer driver)	**32-bit version:** Windows 10 Windows 8.1 Windows 7 Use the latest Service Pack available. **64-bit version:** Windows 10 Windows 8.1 Windows 7 Windows Server 2008 R2 Windows Server 2012, Windows Server 2012 R2 Windows Server 2016 Use the latest Service Pack available.
Recommended operating environment *	**CPU:** Pentium 4 or later, or Athlon 64 or later processor **Memory:** 1 GB or more **Free hard disk space:** 20 GB or more

* Depending on the application software and data being used, the printer may not output correctly even with the above environmental conditions.

macOS

Compatible Operating System (Standard supplied printer driver)	OS X 10.10.5 - OS X 10.11, macOS 10.12 - macOS 10.13
Recommended operating environment *	**CPU:** Intel multi-core processor or later **Memory:** 2 GB or more **Free hard disk space:** 20 GB or more

* Depending on the application software and data being used, the printer may not output correctly even with the above environmental conditions.

- An Internet connection is required to use the Online Manual.
- To install the software while using Windows, you must have a CD-ROM drive or a network connection.
- To install the software while using macOS, you must have a network connection.

Ink

For information on the ink the printer supports, see Ink Tanks.

Paper

For details on the compatible media types, see Paper Information List.

Paper width	For details on the paper widths supported by the printer, see Paper Sizes.
Minimum paper length	**Rolls:** 8.00 inches (203.2 mm) **Sheets:** 11.00 inches (279.4 mm)
Maximum printable length	**Rolls:** 59 feet (18 m) * * Varies depending on the operating system or application. **Sheets:** 5.2 feet (1.6 m)
Thickness	**Rolls:** 3-31 mil (0.07-0.8 mm) **Sheets:** 3-31 mil (0.07-0.8 mm)
Roll maximum outer diameter	5.9 inches (150 mm) or shorter
Supported paper core inner diameter	2.00 inches/3.00 inches (50.8 mm/76.2 mm)
Print area	For details about Print Area, see Print Area.

Print Area

A margin required by the printer is added with respect to the size of paper loaded in the printer. Except in borderless printing, the actual printing area corresponds to the paper size minus the space for this margin.

Note

- Printable Area: The area that can be printed.
- For borderless printing with roll paper, the margin is 0 inch (0 mm).

  However, depending on the paper size, minor margins may be available.

  - Printing without Edges Based on the Scenarios (Windows)
  - Printing without Edges Based on the Scenarios (macOS)
- Recommended Print Area: We recommend printing within this area.
- To match the document size with the actual printing area, print on oversize paper with the required margin added.

  - Printing to Oversized Paper Sizes (Windows)
  - Printing to Oversized Paper Sizes (macOS)

Sheets

Printable Area:

A margin of 0.2 inch (3 mm) on top, 0.5 inch (12.7 mm) on bottom*, and 0.2 inch (3 mm) on left and right sides is required.

Recommended Print Area:

A margin of 0.8 inch (20 mm) on top, 0.8 inch (20 mm) on bottom*, and 0.2 inch (3 mm) on left and right sides is required.

* The bottom margin for cut sheet depends on an OS and applications.

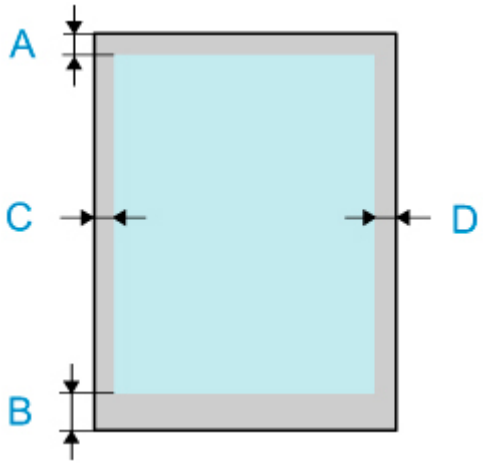

A: Top Edge
B: Bottom Edge
C: Left Edge
D: Right Edge

Rolls

Printable Area:

A margin of 0.2 inch (3 mm) on top and bottom and 0.2 inch (3 mm) on left and right sides is required. For borderless printing, the margins on top, bottom, left, and right are 0 inch (0 mm). For paper that supports borderless printing, see Paper Information List.

Recommended Print Area:

A margin of 0.8 inch (20 mm) on top, 0.2 inch (3 mm) on bottom, and 0.2 inch (3 mm) on left and right sides is required.

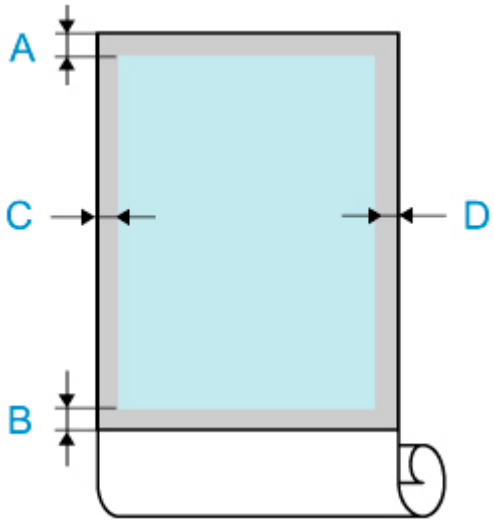

A: Top Edge
B: Bottom Edge
C: Left Edge
D: Right Edge

Safety

- Safety Precautions
- Regulatory Information
- WEEE (EU&EEA)
- When Repairing, Lending, or Disposing of the Printer

Safety Precautions

Choosing a location

- Never install the printer on an unstable or vibrating surface.
- Do not install the printer in locations that are very humid or dusty, in direct sunlight, outdoors, or close to a heating source.
  To avoid the risk of fire or electric shocks, use the printer under the operating environment specified in the Specifications.
- Do not place the printer on a thick rug or carpet.
- Do not place the printer with its back attached to the wall.
- We recommend ensuring ample space for installation.
- Do not install the printer near sources of strong electromagnetic fields, whether equipment that generates such fields or places where such fields occur.

Power Supply

- Ensure that the area around the power outlet is kept clear at all times so you can easily unplug the power cord if necessary.
- Never remove the plug by pulling on the cord.
  Pulling the cord may damage the power cord, leading to possible fire or electrical shock.
- Do not use an extension lead/cord.

Working Around the Printer

- Never put your hands or fingers in the printer while it is printing.
- Moving the printer requires at least 3 people, holding it on the left, right, and rear sides. Be careful to avoid back strain and other injuries due to the weight of the printer.
- When moving the printer, firmly grasp the carrying handles under each side and at the rear side. Holding the printer at other positions is dangerous and cause injury and damage if the printer is dropped.
- When using and transferring the printer, do not tilt it, stand it on its side, or turn it upside down. There is a risk of the ink spilling.
- When transferring the printer tilted, always perform the steps in "Preparing to Transfer the Printer" in order to protect the internal structure.
- Do not place any object on the printer. Especially do not place metal objects (paper clips, staples, etc.) or containers of flammable solvents (alcohol, thinners, etc.) on top of the printer.

Print Heads/Ink Tanks/Maintenance Cartridges

- Keep ink tanks out of the reach of children. In case ink is accidentally licked or swallowed, rinse out mouth or give one or two glasses of water to drink. If irritation or discomfort occurs, obtain medical advice immediately.
- In case ink gets in contact with eyes, rinse with water immediately. In case ink gets in contact with skin, wash with soap and water immediately. If irritation to eyes or skin persists, obtain medical advice immediately.

- Never touch the electrical contacts on a print head after printing.
  The metal parts may be very hot and could cause burns.
- Do not throw ink tanks and maintenance cartridges into fire.
- Do not attempt to disassemble or modify the print head, ink tanks, and maintenance cartridges.
- Avoid dropping or shaking print head, ink tanks, and maintenance cartridges.

Regulatory Information

Users in the U.S.A.

FCC Notice (U.S.A. Only)
For 120V, 60Hz model
Model Number: K10488 (Contains FCC Approved WLAN Module K30357)

This device complies with Part 15 of the FCC Rules. Operation is subject to the following two conditions: (1) This device may not cause harmful interference, and (2) this device must accept any interference received, including interference that may cause undesired operation.

Note: This equipment has been tested and found to comply with the limits for a Class B digital device, pursuant to Part 15 of the FCC Rules. These limits are designed to provide reasonable protection against harmful interference in a residential installation. This equipment generates, uses and can radiate radio frequency energy and, if not installed and used in accordance with the instructions, may cause harmful interference to radio communications.
However, there is no guarantee that interference will not occur in a particular installation. If this equipment does cause harmful interference to radio or television reception, which can be determined by turning the equipment off and on, the user is encouraged to try to correct the interference by one or more of the following measures:

- Reorient or relocate the receiving antenna.
- Increase the separation between the equipment and receiver.
- Connect the equipment into an outlet on a circuit different from that to which the receiver is connected.
- Consult the dealer or an experienced radio/TV technician for help.

Use of a shielded cable is required to comply with Class B limits in Subpart B of Part 15 of the FCC Rules.

Do not make any changes or modifications to the equipment unless otherwise specified in the manual. If such changes or modifications should be made, you could be required to stop operation of the equipment.

FCC ID:AZDK30357

Changes or modifications not expressly approved by the party responsible for compliance could void the user's authority to operate equipment.

This transmitter must not be co-located or operating in conjunction with any other antenna or transmitter.

The equipment complies with FCC radiation exposure limits for at uncontrolled equipment. This equipment should be installed and operated with minimum distance at least 20cm between the radiator and persons body (excluding extremities: hands, wrists, feet and ankles) and must not be colocated or operated with any other antenna or transmitter.

Canon U.S.A., Inc.
One Canon Park
Melville, New York 11747
1-800-652-2666

Interference

Do not use the printer around medical equipment or other electronic devices. Signals from the printer may interfere with the correct operation of these devices.

WEEE (EU&EEA)

Only for European Union and EEA (Norway, Iceland and Liechtenstein)

These symbols indicate that this product is not to be disposed of with your household waste, according to the WEEE Directive (2012/19/EU), the Battery Directive (2006/66/EC) and/or national legislation implementing those Directives. If a chemical symbol is printed beneath the symbol shown above, in accordance with the Battery Directive, this indicates that a heavy metal (Hg = Mercury, Cd = Cadmium, Pb = Lead) is present in this battery or accumulator at a concentration above an applicable threshold specified in the Battery Directive. This product should be handed over to a designated collection point, e.g., on an authorized one-for-one basis when you buy a new similar product or to an authorized collection site for recycling waste electrical and electronic equipment (EEE) and batteries and accumulators. Improper handling of this type of waste could have a possible impact on the environment and human health due to potentially hazardous substances that are generally associated with EEE. Your cooperation in the correct disposal of this product will contribute to the effective usage of natural resources. For more information about the recycling of this product, please contact your local city office, waste authority, approved scheme or your household waste disposal service or visit www.canon-europe.com/weee, or www.canon-europe.com/battery.

Nur für Europäische Union und EWR (Norwegen, Island und Liechtenstein)

Diese Symbole weisen darauf hin, dass dieses Produkt gemäß WEEE-Richtlinie (2012/19/EU; Richtlinie über Elektro- und Elektronik-Altgeräte), Batterien-Richtlinie (2006/66/EG) und nationalen Gesetzen zur Umsetzung dieser Richtlinien nicht über den Hausmüll entsorgt werden darf. Falls sich unter dem oben abgebildeten Symbol ein chemisches Symbol befindet, bedeutet dies gemäß der Batterien-Richtlinie, dass in dieser Batterie oder diesem Akkumulator ein Schwermetall (Hg = Quecksilber, Cd = Cadmium, Pb = Blei) in einer Konzentration vorhanden ist, die über einem in der Batterien-Richtlinie angegebenen Grenzwert liegt. Dieses Produkt muss bei einer dafür vorgesehenen Sammelstelle abgegeben werden. Dies kann z. B. durch Rückgabe beim Kauf eines neuen ähnlichen Produkts oder durch Abgabe bei einer autorisierten Sammelstelle für die Wiederaufbereitung von Elektro- und Elektronik-Altgeräten sowie Batterien und Akkumulatoren geschehen. Der unsachgemäße Umgang mit Altgeräten kann aufgrund potenziell gefährlicher Stoffe, die generell mit Elektro- und Elektronik-Altgeräten in Verbindung stehen, negative Auswirkungen auf die Umwelt und die menschliche Gesundheit haben. Durch Ihre Mitarbeit bei der umweltgerechten Entsorgung dieses Produkts tragen Sie zu einer effektiven Nutzung natürlicher Ressourcen bei. Um weitere Informationen über die Wiederverwertung dieses Produkts zu erhalten, wenden Sie sich an Ihre Stadtverwaltung, den öffentlich-rechtlichen Entsorgungsträger, eine autorisierte Stelle für die Entsorgung von Elektro- und Elektronik-Altgeräten oder Ihr örtliches

Entsorgungsunternehmen oder besuchen Sie www.canon-europe.com/weee, oder www.canon-europe.com/battery.

Union Européenne, Norvège, Islande et Liechtenstein uniquement.

Ces symboles indiquent que ce produit ne doit pas être mis au rebut avec les ordures ménagères, comme le spécifient la Directive européenne DEEE (2012/19/UE), la Directive européenne relative à l'élimination des piles et des accumulateurs usagés (2006/66/CE) et les lois en vigueur dans votre pays appliquant ces directives. Si un symbole de toxicité chimique est imprimé sous le symbole illustré ci-dessus conformément à la Directive relative aux piles et aux accumulateurs, il indique la présence d'un métal lourd (Hg = mercure, Cd = cadmium, Pb = plomb) dans la pile ou l'accumulateur à une concentration supérieure au seuil applicable spécifié par la Directive. Ce produit doit être confié au distributeur à chaque fois que vous achetez un produit neuf similaire, ou à un point de collecte mis en place par les collectivités locales pour le recyclage des Déchets des Équipements Électriques et Électroniques (DEEE). Le traitement inapproprié de ce type de déchet risque d'avoir des répercussions sur l'environnement et la santé humaine, du fait de la présence de substances potentiellement dangereuses généralement associées aux équipements électriques et électroniques. Votre entière coopération dans le cadre de la mise au rebut correcte de ce produit favorisera une meilleure utilisation des ressources naturelles. Pour plus d'informations sur le recyclage de ce produit, contactez vos services municipaux, votre éco-organisme ou les autorités locales compétentes, ou consultez le site www.canon-europe.com/weee, ou www.canon-europe.com/battery.

Uitsluitend bestemd voor de Europese Unie en EER (Noorwegen, IJsland en Liechtenstein)

Met deze symbolen wordt aangegeven dat dit product in overeenstemming met de AEEA-richtlijn (2012/19/EU), de richtlijn 2006/66/EG betreffende batterijen en accu's en/of de plaatselijk geldende wetgeving waarin deze richtlijnen zijn geïmplementeerd, niet bij het normale huisvuil mag worden weggegooid. Indien onder het hierboven getoonde symbool een chemisch symbool gedrukt staat, geeft dit in overeenstemming met de richtlijn betreffende batterijen en accu's aan dat deze batterij of accu een zwaar metaal bevat (Hg = kwik, Cd = cadmium, Pb = lood) waarvan de concentratie de toepasselijke drempelwaarde in overeenstemming met de genoemde richtlijn overschrijdt. Dit product dient te worden ingeleverd bij een hiervoor aangewezen inzamelpunt, bijv. door dit in te leveren bij een hiertoe erkend verkooppunt bij aankoop van een gelijksoortig product, of bij een officiële inzameldienst voor de recycling van elektrische en elektronische apparatuur (EEA) en batterijen en accu's. Door de potentieel gevaarlijke stoffen die gewoonlijk gepaard gaan met EEA, kan onjuiste verwerking van dit type afval mogelijk nadelige gevolgen hebben voor het milieu en de menselijke gezondheid. Uw medewerking bij het op juiste wijze weggooien van dit product draagt bij tot effectief gebruik van natuurlijke hulpbronnen. Voor verdere informatie over recycling van dit product kunt u contact opnemen met uw plaatselijke gemeente,

afvaldienst, officiële dienst voor klein chemisch afval of afvalstortplaats, of kunt u terecht op www.canon-europe.com/weee, of www.canon-europe.com/battery.

Sólo para la Unión Europea y el Área Económica Europea (Noruega, Islandia y Liechtenstein)

Estos iconos indican que este producto no debe desecharse con los residuos domésticos de acuerdo con la Directiva sobre RAEE (2012/19/UE) y la Directiva sobre Pilas y Acumuladores (2006/66/CE) y/o la legislación nacional. Si aparece un símbolo químico bajo este icono, de acuerdo con la Directiva sobre Pilas y Acumuladores, significa que la pila o el acumulador contiene metales pesados (Hg = Mercurio, Cd = Cadmio, Pb = Plomo) en una concentración superior al límite especificado en dicha directiva. Este producto deberá entregarse en un punto de recogida designado, por ejemplo, entregándolo en el lugar de venta al adquirir un producto nuevo similar o en un centro autorizado para la recogida de residuos de aparatos eléctricos y electrónicos (RAEE), baterías y acumuladores. La gestión incorrecta de este tipo de residuos puede afectar al medio ambiente y a la salud humana debido a las sustancias potencialmente nocivas que suelen contener estos aparatos. Su cooperación en la correcta eliminación de este producto contribuirá al correcto aprovechamiento de los recursos naturales. Los usuarios tienen derecho a devolver pilas, acumuladores o baterías usados sin coste alguno. El precio de venta de pilas, acumuladores y baterías incluye el coste de la gestión medioambiental de su desecho, y no es necesario mostrar la cuantía de dicho coste en la información y la factura suministradas a los usuarios finales. Si desea más información sobre el reciclado de este producto, póngase en contacto con su municipio, el servicio o el organismo encargado de la gestión de residuos domésticos o visite www.canon-europe.com/weee, o www.canon-europe.com/battery.

Només per a la Unió Europea i a l’Espai Econòmic Europeu (Noruega, Islàndia i Liechtenstein)

Aquests símbols indican que aquest producte no s’ha de llençar amb les escombraries de la llar, d’acord amb la RAEE (2012/19/UE), la Directiva relativa a piles i acumuladors (2006/66/CE) i la legislació nacional que implementi aquestes directives. Si al costat d’aquest símbol hi apareix imprès un símbol químic, segons especifica la Directiva relativa a piles i acumuladors, significa que la bateria o l’acumulador conté un metall pesant (Hg = mercuri, Cd = cadmi, Pb = plom) en una concentració superior al límit aplicable especificat en la Directiva. Aquest producte s’hauria de lliurar en un dels punts de recollida designats, com per exemple, intercanviant un per un en comprar un producte similar o lliurant-lo en un lloc de recollida autoritzat per al reciclatge de residus d’aparells elèctrics i electrònics (RAEE) i piles i acumuladors. La manipulació inadequada d’aquest tipus de residus podria tenir un impacte negatiu en l’entorn i en la salut humana, a causa de les substàncies potencialment perilloses que normalment estan associades a l'RAEE. La vostra cooperació a l’hora de rebutjar correctament aquest producte contribuirà a la utilització efectiva dels recursos naturals. Els usuaris tenen dret a retornar les bateries o els

acumuladors usats sense cap càrrec. El preu de venda de les bateries i els acumuladors inclou el cost de la gestió ambiental dels residus i no es necessari mostrar l'import d'aquest cost en aquest fullet o en la factura que es lliuri a l'usuari final. Per a més informació sobre el reciclatge d'aquest producte, contacteu amb l'oficina municipal, les autoritats encarregades dels residus, el pla de residus homologat o el servei de recollida d'escombraries domèstiques de la vostra localitat o visiteu www.canon-europe.com/weee, o www.canon-europe.com/battery.

Solo per Unione Europea e SEE (Norvegia, Islanda e Liechtenstein)

Questi simboli indicano che il prodotto non può essere smaltito con i rifiuti domestici, ai sensi della Direttiva RAEE (2012/19/UE), della Direttiva sulle Batterie (2006/66/CE) e/o delle leggi nazionali che attuano tali Direttive. Se sotto il simbolo indicato sopra è riportato un simbolo chimico, in osservanza della Direttiva sulle batterie, tale simbolo indica la presenza di un metallo pesante (Hg = Mercurio, Cd = Cadmio, Pb = Piombo) nella batteria o nell'accumulatore con un livello di concentrazione superiore a una soglia applicabile specificata nella Direttiva sulle batterie. Il prodotto deve essere conferito a un punto di raccolta designato, ad esempio il rivenditore in caso di acquisto di un nuovo prodotto simile oppure un centro di raccolta autorizzato per il riciclaggio di rifiuti di apparecchiature elettriche ed elettroniche (RAEE) nonché di batterie e accumulatori. Un trattamento improprio di questo tipo di rifiuti può avere conseguenze negative sull'ambiente e sulla salute umana a causa delle sostanze potenzialmente nocive solitamente contenute in tali rifiuti. La collaborazione dell'utente per il corretto smaltimento di questo prodotto contribuirà a un utilizzo efficace delle risorse naturali ed eviterà di incorrere in sanzioni amministrative ai sensi dell'art. 255 e successivi del Decreto Legislativo n. 152/06. Per ulteriori informazioni sul riciclaggio di questo prodotto, contattare le autorità locali, l'ente responsabile della raccolta dei rifiuti, un rivenditore autorizzato o il servizio di raccolta dei rifiuti domestici, oppure visitare il sito www.canon-europe.com/weee, o www.canon-europe.com/battery.

Apenas para a União Europeia e AEE (Noruega, Islândia e Liechtenstein)

Estes símbolos indicam que este produto não deve ser eliminado juntamente com o seu lixo doméstico, segundo a Diretiva REEE de 2012/19/UE, a Diretiva de Baterias (2006/66/CE) e/ou a sua legislação nacional que transponha estas Diretivas. Se houver um símbolo químico impresso como mostrado abaixo, de acordo com a Diretiva de Baterias, isto indica que um metal pesado (Hg = Mercúrio, Cd = Cádmio, Pb = Chumbo) está presente nesta pilha ou acumulador, numa concentração acima de um limite aplicável especificado na Diretiva. Este produto deve ser entregue num ponto de recolha designado, por exemplo num local autorizado de troca quando compra um equipamento novo idêntico, ou num local de recolha autorizado para reciclar equipamento elétrico e eletrónico (EEE) em fim de vida, bem como pilhas e baterias. O tratamento inadequado deste tipo de resíduos pode ter um impacto negativo no ambiente e na saúde humana, devido a substâncias potencialmente perigosas que estão associadas com

equipamentos do tipo EEE. A sua cooperação no tratamento correto deste produto irá contribuir para a utilização mais eficaz dos recursos naturais. Para obter mais informações acerca de como reciclar este produto, por favor contacte as suas autoridades locais responsáveis pela matéria, serviço de recolha aprovado para pilhas e baterias ou serviço de recolha de resíduos sólidos domésticos da sua municipalidade, ou visite www.canon-europe.com/weee, ou www.canon-europe.com/battery.

Gælder kun i Europæiske Union og EØS (Norge, Island og Liechtenstein)

Disse symboler betyder, at produktet ikke må bortskaffes sammen med dagrenovation i henhold til WEEE-direktivet (2012/19/EU), batteridirektivet (2006/66/EF) og/eller den lokale lovgivning, som disse direktiver er gennemført i. Hvis der i overensstemmelse med batteridirektivet er trykt et kemisk symbol under det symbol, der er vist ovenfor, betyder det, at batteriet eller akkumulatoren indeholder tungmetaller (Hg = kviksølv, Cd = cadmium, Pb = bly) i en koncentration, som ligger over de grænseværdier, der er beskrevet i batteridirektivet. Produktet skal afleveres på et godkendt indsamlingssted, f.eks. i overensstemmelse med en godkendt én-til-én-procedure, når du indkøber et nyt tilsvarende produkt, eller på et godkendt indsamlingssted for elektronikaffald samt for batterier og akkumulatorer. Forkert håndtering af denne type affald kan medføre negative konsekvenser for miljøet og menneskers helbred på grund af de potentielt sundhedsskadelige stoffer, der generelt kan forefindes i elektrisk og elektronisk udstyr. Når du foretager korrekt bortskaffelse af produktet, bidrager du til effektiv brug af naturressourcerne. Kontakt din kommune, den lokale affaldsmyndighed, det lokale affaldsanlæg, eller besøg www.canon-europe.com/weee, eller www.canon-europe.com/battery for at få flere oplysninger om genbrug af dette produkt.

Μόνο για την Ευρωπαϊκή Ένωση και τον ΕΟΧ (Νορβηγία, Ισλανδία και Λιχτενστάιν)

Αυτά τα σύμβολα υποδεικνύουν ότι αυτό το προϊόν δεν πρέπει να απορρίπτεται μαζί με τα οικιακά απορρίμματα, σύμφωνα με την Οδηγία για τα Απόβλητα Ηλεκτρικού και Ηλεκτρονικού Εξοπλισμού (ΑΗΗΕ) (2012/19/ΕΕ), την Οδηγία για τις Ηλεκτρικές Στήλες (2006/66/ΕΚ) ή/και την εθνική νομοθεσία που εφαρμόζει τις Οδηγίες εκείνες. Εάν κάποιο χημικό σύμβολο είναι τυπωμένο κάτω από το σύμβολο που φαίνεται παραπάνω, σύμφωνα με την Οδηγία για τις Ηλεκτρικές Στήλες, υποδηλώνει ότι κάποιο βαρύ μέταλλο (Hg = Υδράργυρος, Cd = Κάδμιο, Pb = Μόλυβδος) υπάρχει στην μπαταρία ή τον συσσωρευτή σε συγκέντρωση μεγαλύτερη από το ισχύον επίπεδο που καθορίζεται στην Οδηγία για τις Ηλεκτρικές Στήλες. Αυτό το προϊόν πρέπει να παραδίδεται σε καθορισμένο σημείο συλλογής, π.χ. σε μια εξουσιοδοτημένη βάση ανταλλαγής όταν αγοράζετε ένα νέο παρόμοιο προϊόν ή σε μια εξουσιοδοτημένη θέση συλλογής για την ανακύκλωση των αποβλήτων ηλεκτρικού και ηλεκτρονικού εξοπλισμού (ΗΗΕ) και των ηλεκτρικών στηλών και συσσωρευτών. Ο ακατάλληλος χειρισμός αυτού του τύπου αποβλήτων μπορεί να έχει αρνητικό αντίκτυπο στο περιβάλλον και την υγεία του ανθρώπου, λόγω δυνητικά επικίνδυνων ουσιών που

γενικά συνδέονται με τον ΗΗΕ. Η συνεργασία σας για τη σωστή απόρριψη αυτού του προϊόντος θα συμβάλει στην αποτελεσματική χρήση των φυσικών πόρων. Για περισσότερες πληροφορίες σχετικά με ανακύκλωση αυτού του προϊόντος, επικοινωνήστε με το τοπικό γραφείο της πόλης σας, την υπηρεσία απορριμμάτων, το εγκεκριμένο σχήμα ή την υπηρεσία απόρριψης οικιακών αποβλήτων ή επισκεφθείτε τη διεύθυνση www.canon-europe.com/weee ή www.canon-europe.com/battery.

Gjelder kun den europeiske union og EØS (Norge, Island og Liechtenstein)

Disse symbolene indikerer at dette produktet ikke skal kastes sammen med husholdningsavfall, i henhold til WEEE-direktivet (2012/19/EU), batteridirektivet (2006/66/EF) og/eller nasjonal lov som har implementert disse direktivene. Hvis et kjemisk symbol vises under symbolet vist ovenfor, i samsvar med batteridirektivet, indikerer dette at et tungmetall (Hg = kvikksølv, Cd = kadmium, Pb = bly) finnes i batteriet eller akkumulatoren i en konsentrasjon over en gjeldende øvre grense som er spesifisert i batteridirektivet. Produktet må leveres til et dertil egnet innsamlingspunkt, det vil si på en autorisert en-til-en-basis når en kjøper et nytt lignende produkt, eller til et autorisert innsamlingssted for resirkulering av avfall fra elektrisk og elektronisk utstyr (EE-utstyr) og batterier og akkumulatorer. Feil håndtering av denne typen avfall kan være miljø- og helseskadelig på grunn av potensielt skadelige stoffer som ofte brukes i EE-utstyr. Din innsats for korrekt avhending av produktet vil bidra til effektiv bruk av naturressurser. Du kan få mer informasjon om resirkulering av dette produktet ved å kontakte lokale myndigheter, avfallsadministrasjonen, et godkjent program eller husholdningens renovasjonsselskap, eller gå til www.canon-europe.com/weee, eller www.canon-europe.com/battery.

Vain Euroopan unionin sekä ETA:n (Norja, Islanti ja Liechtenstein) alueelle.

Nämä tunnukset osoittavat, että sähkö- ja elektroniikkalaiteromua koskeva direktiivi (SER-direktiivi, 2012/19/EU), paristoista ja akuista annettu direktiivi (2006/66/EY) sekä kansallinen lainsäädäntö kieltävät tuotteen hävittämisen talousjätteen mukana. Jos yllä olevan symbolin alapuolelle on paristodirektiivin mukaisesti painettu kemiallisen aineen tunnus, kyseinen paristo tai akku sisältää raskasmetalleja (Hg = elohopea, Cd = kadmium, Pb = lyijy) enemmän kuin paristodirektiivin salliman määrän. Tuote on vietävä asianmukaiseen keräyspisteeseen, esimerkiksi kodinkoneliikkeeseen uutta vastaavaa tuotetta ostettaessa tai viralliseen sähkö- ja elektroniikkalaiteromun tai paristojen ja akkujen keräyspisteeseen. Sähkö- ja elektroniikkalaiteromun virheellinen käsittely voi vahingoittaa ympäristöä ja ihmisten terveyttä, koska laitteet saattavat sisältää ympäristölle ja terveydelle haitallisia aineita. Tuotteen asianmukainen hävittäminen säästää myös luonnonvaroja. Jos haluat lisätietoja tämän tuotteen kierrätyksestä, ota yhteys kunnan jätehuoltoviranomaisiin tai käyttämääsi jätehuoltoyhtiöön tai käy osoitteessa www.canon-europe.com/weee, tai www.canon-europe.com/battery.

Endast för Europeiska unionen och EES (Norge, Island och Liechtenstein)

De här symbolerna visar att produkten inte får sorteras och slängas som hushållsavfall enligt WEEE-direktivet (2012/19/EU), batteridirektivet (2006/66/EG) och/eller nationell lagstiftning som implementerar dessa direktiv. Om en kemisk symbol förekommer under ovanstående symbol innebär detta enligt Batteridirektivet att en tungmetall (Hg = Kvicksilver, Cd = Kadmium, Pb = Bly) förekommer i batteriet eller ackumulatorn med en koncentration som överstiger tillämplig gräns som anges i Batteridirektivet. Produkten ska lämnas in på en avsedd insamlingsplats, t.ex. på en återvinningsstation auktoriserad att hantera elektrisk och elektronisk utrustning (EE-utrustning) samt batterier och ackumulatorer eller hos handlare som är auktoriserade att byta in varor då nya, motsvarande köps (en mot en). Olämplig hantering av avfall av den här typen kan ha negativ inverkan på miljön och människors hälsa på grund av de potentiellt farliga ämnen som kan återfinnas i elektrisk och elektronisk utrustning. Din medverkan till en korrekt avfallshantering av produkten bidrar till effektiv användning av naturresurserna. Om du vill ha mer information om var du kan lämna in den här produkten, kontakta ditt lokala kommunkontor, berörd myndighet eller företag för avfallshantering eller se www.canon-europe.com/weee, eller www.canon-europe.com/battery.

Pouze Evropská unie a EHP (Norsko, Island a Lichtenštejnsko)

Tento symbol znamená, že podle směrnice OEEZ (2012/19/EU), směrnice o bateriích (2006/66/ES) a/nebo podle vnitrostátních právních prováděcích předpisů k těmto směrnicím nemá být tento výrobek likvidován s odpadem z domácností. Je-li v souladu s požadavky směrnice o bateriích vytištěna pod výše uvedeným symbolem chemická značka, udává, že tato baterie nebo akumulátor obsahuje těžké kovy (Hg = rtuť, Cd = kadmium, Pb = olovo) v koncentraci vyšší, než je příslušná hodnota předepsaná směrnicí. Tento výrobek má být vrácen do určeného sběrného místa, např. v rámci autorizovaného systému odběru jednoho výrobku za jeden nově prodaný podobný výrobek, nebo do autorizovaného sběrného místa pro recyklaci odpadních elektrických a elektronických zařízení (OEEZ), baterií a akumulátorů. Nevhodné nakládání s tímto druhem odpadu by mohlo mít negativní dopad na životní prostředí a lidské zdraví, protože elektrická a elektronická zařízení zpravidla obsahují potenciálně nebezpečné látky. Vaše spolupráce na správné likvidaci tohoto výrobku napomůže efektivnímu využívání přírodních zdrojů. Chcete-li získat podrobné informace týkající se recyklace tohoto výrobku, obraťte se prosím na místní úřad, orgán pro nakládání s odpady, schválený systém nakládání s odpady či společnost zajišťující likvidaci domovního odpadu, nebo navštivte webové stránky www.canon-europe.com/weee nebo www.canon-europe.com/battery.

Csak az Európai Unió és az EGT (Norvégia, Izland és Liechtenstein) országaiban

Ezek a szimbólumok azt jelzik, hogy a termék hulladékkezelése a háztartási hulladéktól különválasztva, az elektromos és elektronikus berendezések hulladékairól (WEEE) szóló (2012/19/EU) irányelvnek és az elemekről és akkumulátorokról, valamint a hulladék elemekről és akkumulátorokról szóló (2006/66/EK) irányelvnek megfelelően és/vagy ezen irányelveknek megfelelő helyi előírások szerint történik. Amennyiben a fent feltüntetett szimbólum alatt egy vegyjel is szerepel, az elemekről és akkumulátorokról szóló irányelvben foglaltak értelmében ez azt jelzi, hogy az elem vagy az akkumulátor az irányelvben meghatározott határértéknél nagyobb mennyiségben tartalmaz nehézfémet (Hg = higany, Cd = kadmium, Pb = ólom). E terméket az arra kijelölt gyűjtőhelyre kell juttatni – pl. hasonló termék vásárlásakor a régi becserélésére vonatkozó hivatalos program keretében, vagy az elektromos és elektronikus berendezések (EEE) hulladékainak gyűjtésére, valamint a hulladék elemek és hulladék akkumulátorok gyűjtésére kijelölt hivatalos gyűjtőhelyre. Az ilyen jellegű hulladékok nem előírásszerű kezelése az elektromos és elektronikus berendezésekhez (EEE) általánosan kapcsolható potenciálisan veszélyes anyagok révén hatással lehet a környezetre és az egészségre. E termék megfelelő leselejtezésével Ön is hozzájárul a természeti források hatékony használatához. A termék újrahasznosítását illetően informálódjon a helyi polgármesteri hivatalnál, a helyi közterület-fenntartó vállalatnál, a hivatalos hulladéklerakó telephelyen vagy a háztartási hulladék begyűjtését végző szolgáltatónál, illetve látogasson el a www.canon-europe.com/weee, vagy www.canon-europe.com/battery internetes oldalra.

Tylko dla krajów Unii Europejskiej oraz EOG (Norwegia, Islandia i Liechtenstein)

Te symbole oznaczają, że produktu nie należy wyrzucać razem z odpadami gospodarstwa domowego, zgodnie z dyrektywą WEEE w sprawie zużytego sprzętu elektrycznego i elektronicznego (2012/19/UE) lub dyrektywą w sprawie baterii (2006/66/WE) bądź przepisami krajowymi wdrażającymi te dyrektywy. Jeśli pod powyższym symbolem znajduje się symbol chemiczny, zgodnie z dyrektywą w sprawie baterii oznacza to, że bateria lub akumulator zawiera metal ciężki (Hg = rtęć, Cd = kadm, Pb = ołów) w stężeniu przekraczającym odpowiedni poziom określony w dyrektywie w sprawie baterii. Użytkownicy baterii i akumulatorów mają obowiązek korzystać z dostępnego programu zwrotu, recyklingu i utylizacji baterii oraz akumulatorów. Niewłaściwe postępowanie z tego typu odpadami może mieć wpływ na środowisko i zdrowie ludzi ze względu na substancje potencjalnie niebezpieczne, związane ze zużytym sprzętem elektrycznym i elektronicznym. Państwa współpraca w zakresie właściwej utylizacji tego produktu przyczyni się do efektywnego wykorzystania zasobów naturalnych. W celu uzyskania informacji o sposobie recyklingu tego produktu prosimy o kontakt z właściwym urzędem miejskim lub zakładem gospodarki komunalnej bądź zapraszamy na stronę www.canon-europe.com/weee, lub www.canon-europe.com/battery.

Platí len pre štáty Európskej únie a EHP (Nórsko, Island a Lichtenštajnsko)

Tieto symboly označujú, že podľa Smernice o odpade z elektrických a elektronických zariadení (OEEZ) 2012/19/EÚ, Smernice o batériách (2006/66/ES) a podľa platnej legislatívy Slovenskej republiky sa tento produkt nesmie likvidovať spolu s komunálnym odpadom. Ak je chemická značka vytlačená pod vyššie uvedeným symbolom, znamená to, že táto batéria alebo akumulátor obsahuje ťažký kov (Hg = ortuť, Cd = kadmium, Pb = olovo) v koncentrácii vyššej, ako je príslušná povolená hodnota stanovená v Smernici o batériách. Produkt je potrebné odovzdať do určenej zberne, napr. prostredníctvom výmeny za kúpu nového podobného produktu, alebo na autorizované zberné miesto, ktoré spracúva odpad z elektrických a elektronických zariadení (EEZ), batérií a akumulátorov. Nesprávna manipulácia s takýmto typom odpadu môže mať negatívny vplyv na životné prostredie a ľudské zdravie, pretože elektrické a elektronické zariadenia obsahujú potenciálne nebezpečné látky. Spoluprácou na správnej likvidácii tohto produktu prispejete k účinnému využívaniu prírodných zdrojov. Ďalšie informácie o recyklácii tohto produktu získate od miestneho úradu, úradu životného prostredia, zo schváleného plánu OEEZ alebo od spoločnosti, ktorá zaisťuje likvidáciu komunálneho odpadu. Viac informácií nájdete aj na webovej stránke: www.canon-europe.com/weee, alebo www.canon-europe.com/battery.

Üksnes Euroopa Liit ja EMP (Norra, Island ja Liechtenstein)

Antud sümbolid viitavad sellele, et vastavalt elektri- ja elektroonikaseadmete jäätmeid käsitlevale direktiivile (2012/19/EL), patareisid ja akusid ning patarei- ja akujäätmeid käsitlevale direktiivile (2006/66/EÜ) ja/või nimetatud direktiive rakendavatele riiklikele õigusaktidele ei või seda toodet koos olmejäätmetega ära visata. Kui keemiline sümbol on trükitud eespool toodud sümboli alla, siis tähendab see, et antud patareis või akus leiduva raskemetalli (Hg = elavhõbe, Cd = kaadmium, Pb = plii) kontsentratsioonitase on kõrgem kui patareisid ja akusid ning patarei- ja akujäätmeid käsitlevas direktiivis sätestatud piirmäär. Antud tootest tekkinud jäätmed tuleb anda vastavasse kogumispunkti, nt müügipunkti, mis on volitatud üks ühe vastu vahetama, kui ostate uue sarnase toote, või vastavasse elektri- ja lektroonikaseadmete jäätmete ning patareide ja akude ümbertöötlemiseks mõeldud kogumispunkti. Antud liiki jäätmete vale käitlemine võib kahjustada keskkonda ja inimeste tervist elektri- ja elektroonikajäätmetes tavaliselt leiduvate potentsiaalselt ohtlike ainete tõttu. Antud tootest tekkinud jäätmete nõuetekohase kõrvaldamisega aitate kasutada loodusvarasid efektiivselt. Täiendava teabe saamiseks elektri- ja elektroonikaseadmetest tekkinud jäätmete ning patarei- ja akujäätmete tagastamise ja ümbertöötlemise kohta võtke ühendust kohaliku omavalitsusega, asjakohase valitsusasutusega, asjakohase tootjavastutusorganisatsiooniga või olmejäätmete käitlejaga. Lisateavet leitate ka Interneti-leheküljelt www.canon-europe.com/weee või www.canon-europe.com/battery.

Tikai Eiropas Savienībai un EEZ (Norvēģijai, Islandei un Lihtenšteinai)

Šie simboli norāda, ka atbilstoši ES Direktīvai (2012/19/ES) par elektrisko un elektronisko iekārtu atkritumiem (EEIA), Direktīvai (2006/66/EK) par baterijām un akumulatoriem, un akumulatoru atkritumiem, ar ko atceļ Direktīvu 91/157/EEK, un vietējiem tiesību aktiem šo izstrādājumu nedrīkst izmest kopā ar sadzīves atkritumiem. Ja zem iepriekš norādītā simbola ir uzdrukāts ķīmiskais simbols, saskaņā ar direktīvu par baterijām un akumulatoriem tas nozīmē, ka šīs baterijas vai akumulatori satur smagos metālus (Hg = dzīvsudrabs, Cd = kadmijs, Pb = svins) un to koncentrācijas līmenis pārsniedz direktīvā par baterijām un akumulatoriem minēto piemērojamo slieksni. Šis izstrādājums ir jānodod piemērotā savākšanas vietā, piemēram, apstiprinātā veikalā, kur iegādājaties līdzīgu jaunu produktu un atstājat veco, vai apstiprinātā vietā izlietotu elektrisko un elektronisko iekārtu un bateriju un akumulatoru pārstrādei. Nepareiza šāda veida atkritumu apsaimniekošana var apdraudēt vidi un cilvēka veselību tādu iespējami bīstamu vielu dēļ, kas parasti ir elektriskajās un elektroniskajās iekārtās. Jūsu atbalsts pareizā šāda veida atkritumu apsaimniekošanā sekmēs efektīvu dabas resursu izmantošanu. Lai saņemtu pilnīgāku informāciju par šāda veida izstrādājumu nodošanu otrreizējai pārstrādei, sazinieties ar vietējo pašvaldību, atkritumu savākšanas atbildīgo dienestu, pilnvaroto organizāciju vai iestādi, kas veic sadzīves atkritumu apsaimniekošanu, vai apmeklējiet tīmekļa vietni www.canon-europe.com/weee, vai www.canon-europe.com/battery.

Tik Europos Sąjungai ir EEE (Norvegijai, Islandijai ir Lichtenšteinui)

Šie simboliai reiškia, kad šio gaminio negalima išmesti į buitines atliekas, kaip reikalaujama WEEE Direktyvoje (2012/19/ES) ir Baterijų direktyvoje (2006/66/EB) ir (ar) jūsų šalies nacionaliniuose įstatymuose, kuriais šios Direktyvos yra įgyvendinamos. Jeigu cheminio ženklo simbolis yra nurodytas žemiau šio ženklo, tai reiškia, kad vadovaujantis Baterijų direktyvą, baterijų ar akumuliatorių sudėtyje yra sunkiųjų metalų (Hg = gyvsidabrio, Cd = kadmio, Pb = švino), kurių koncentracija viršija Baterijų direktyvoje nurodytas leistinas ribas. Šį gaminį reikia pristatyti į specialųjį surinkimo punktą, pavyzdžiui, mainais, kai jūs perkate naują panašų gaminį, arba į specialiąją surinkimo vietą, kurioje perdirbamos elektrinės ir elektroninės įrangos atliekos bei naudotos baterijos ir akumuliatoriai. Dėl netinkamo šio tipo atliekų tvarkymo gali nukentėti aplinka ir iškilti grėsmė žmogaus sveikatai dėl galimai kenksmingų medžiagų, iš esmės susijusių su elektrine ir elektronine įranga. Bendradarbiaudami ir teisingai utilizuodami šiuos gaminius, jūs padėsite efektyviai naudoti gamtinius išteklius. Daugiau informacijos apie gaminio perdirbimą jums gali suteikti vietinis biuras, atliekų tvarkymo bendrovė, sertifikuoti organai ar buitinių atliekų surinkimo įmonės. Taip pat siūloma apsilankyti interneto svetainėje www.canon-europe.com/weee, arba www.canon-europe.com/battery.

Samo za Evropsko unijo in EGP (Norveška, Islandija in Lihtenštajn)

Ti simboli pomenijo, da tega izdelka skladno z Direktivo OEEO (2012/19/EU), Direktivo 2006/66/ES in/ali nacionalno zakonodajo, ki uvaja ti direktivi, ne smete odlagati z nesortiranimi gospodinjskimi odpadki. Če je pod zgoraj prikazanim simbolom natisnjen kemijski simbol, to v skladu z Direktivo pomeni, da je v tej bateriji ali akumulatorju prisotna težka kovina (Hg = živo srebro, Cd = kadmij, Pb = svinec), in sicer v koncentraciji, ki je nad relevantno mejno vrednostjo, določeno v Direktivi. Ta izdelek je potrebno odnesti na izbrano zbirno mesto, t. j. pooblaščeno trgovino, kjer ob nakupu novega (podobnega) izdelka vrnete starega, ali na pooblaščeno zbirno mesto za ponovno uporabo odpadne električne in elektronske opreme (EEO) ter baterij in akumulatorjev. Neustrezno ravnanje s to vrsto odpadkov lahko negativno vpliva na okolje in človeško zdravje zaradi potencialno nevarnih snovi, ki so pogosto povezane z EEO. Vaše sodelovanje pri pravilnem odlaganju tega izdelka predstavlja pomemben prispevek k smotrni izrabi naravnih virov. Za več informacij o ponovni uporabi tega izdelka se obrnite na lokalen mestni urad, pristojno službo za odpadke, predstavnika pooblaščenega programa za obdelavo odpadkov ali na lokalno komunalo. Lahko pa tudi obiščete našo spletno stran www.canon-europe.com/weee, ali www.canon-europe.com/battery.

Само за Европейския съюз и ЕИП (Норвегия, Исландия и Лихтенщайн)

Тези символи показват, че този продукт не трябва да се изхвърля заедно с битовите отпадъци съгласно Директивата за ИУЕЕО (2012/19/ЕС), Директивата за батерии (2006/66/ЕО) и/или Вашето национално законодателство, прилагащо тези Директиви. Ако под показания горе символ е отпечатан символ за химически елемент, съгласно разпоредбите на Директивата за батерии, този втори символ означава наличието на тежък метал (Hg = живак, Cd = кадмий, Pb = олово) в батерията или акумулатора в концентрация над указаната граница за съответния елемент в Директивата. Този продукт трябва да бъде предаден в предназначен за целта пункт за събиране, например на база размяна, когато купувате нов подобен продукт, или в одобрен събирателен пункт за рециклиране на излязло от употреба електрическо и електронно оборудване (ИУЕЕО), батерии и акумулатори. Неправилното третиране на този тип отпадъци може да доведе до евентуални отрицателни последствия за околната среда и човешкото здраве поради потенциално опасните вещества, които обикновено са свързани с ЕЕО. В същото време Вашето съдействие за правилното изхвърляне на този продукт ще допринесе за ефективното използване на природните ресурси. За повече информация относно това къде можете да предадете за рециклиране на този продукт, моля свържете се с Вашите местни власти, с органа, отговорен за отпадъците, с одобрената система за ИУЕЕО или с Вашата местна служба за битови отпадъци, или посетете www.canon-europe.com/weee, или www.canon-europe.com/battery.

Doar pentru Uniunea Europeană şi EEA (Norvegia, Islanda şi Liechtenstein)

Aceste simboluri indică faptul că acest produs nu trebuie aruncat împreună cu deşeurile menajere, în conformitate cu Directiva DEEE (2012/19/UE), Directiva referitoare la baterii (2006/66/CE) şi/sau legile dvs. naţionale ce implementează aceste Directive. Dacă un simbol chimic este imprimat sub simbolul de mai sus, în conformitate cu Directiva referitoare la baterii, acest simbol indică prezenţa în baterie sau acumulator a unui metal greu (Hg = Mercur, Cd = Cadmiu, Pb = Plumb) într-o concentraţie mai mare decât pragul admis specificat în Directiva referitoare la baterii. Acest produs trebuie înmânat punctului de colectare adecvat, ex: printr-un schimb autorizat unu la unu atunci când cumpăraţi un produs nou similar sau la un loc de colectare autorizat pentru reciclarea reziduurilor de echipament electric şi electronic (EEE) şi baterii şi acumulatori. Administrarea neadecvată a acestui tip de deşeuri, ar putea avea un impact asupra mediului şi asupra sănătăţii umane datorită substanţelor cu potenţial de risc care sunt în general asociate cu EEE. Cooperarea dvs. în direcţia reciclării corecte a acestui produs va contribui la o utilizare eficientă a resurselor naturale. Pentru mai multe informaţii despre reciclarea acestui produs, vă rugăm să contactaţi biroul dvs. local, autorităţile responsabile cu deşeurile, schema aprobată sau serviciul dvs. responsabil cu deşeurile menajere sau vizitaţi-ne la www.canon-europe.com/weee, sau www.canon-europe.com/battery.

Samo za Europsku uniju i EEA (Norveška, Island i Lihtenštajn)

Oznaka pokazuje da se ovaj proizvod ne smije odlagati s komunalnim i ostalim vrstama otpada, u skladu s direktivom WEEE (2012/19/EC), Direktivom o baterijama (2006/66/EC) i Pravilnikom o gospodarenju otpadnim baterijama i akumulatorima te Pravilnikom o gospodarenju otpadnim električnim i elektroničkim uređajima i opremom. Ako je ispod prethodno prikazane oznake otisnut kemijski simbol, u skladu s Direktivom o baterijama, to znači da se u ovoj bateriji ili akumulatoru nalazi teški metal (Hg = živa, Cd = kadmij, Pb = olovo) i da je njegova koncentracija iznad razine propisane u Direktivi o baterijama. Ovaj bi proizvod trebalo predati ovlašenom skupljaču EE otpada ili prodavatelju koji je dužan preuzeti otpadni proizvod po sistemu jedan za jedan, ukoliko isti odgovara vrsti te je obavljao primarne funkcije kao i isporučena EE oprema. Otpadne baterije i akumulatori predaju se ovlaštenom skupljaču otpadnih baterija ili akumulatora ili prodavatelju bez naknade i obveze kupnje za krajnjeg korisnika. Neodgovarajuće rukovanje ovom vrstom otpada može utjecati na okoliš i ljudsko zdravlje zbog potencijalno opasnih supstanci koje se najčešće nalaze na takvim mjestima. Vaša suradnja u pravilnom zbrinjavanju ovog proizvoda pridonijet će djelotvornom iskorištavanju prirodnih resursa. Dodatne informacije o recikliranju ovog proizvoda zatražite od svog lokalnog gradskog ureda, službe za zbrinjavanje otpada, odobrenog programa ili komunalne službe za uklanjanje otpada ili pak na stranicama www.canon-europe.com/weee ili www.canon-europe.com/battery.

Korisnici u Srbiji

Ovaj simbol označava da ovaj proizvod ne sme da se odlaže sa ostalim kućnim otpadom, u skladu sa WEEE Direktivom (2012/19/EU), Direktivom o baterijama (2006/66/EC) i nacionalnim zakonima. Ukoliko je ispod gore navedenog simbola odštampan hemijski simbol, u skladu sa Direktivom o baterijama, ovaj simbol označava da su u ovoj bateriji ili akumulatoru prisutni teški metali (Hg – živa, Cd – kadmijum, Pb - olovo) u koncentracijama koje premašuju prihvatljivi prag naveden u Direktivi o baterijama. Ovaj proizvod treba predati određenom centru za prikupljanje, npr. po principu „jedan-za-jedan“ kada kupujete sličan novi proizvod, ili ovlašćenom centru za prikupljanje za reciklažu istrošene električne i elektronske opreme (EEE), baterija i akumulatora. Nepravilno rukovanje ovom vrstom otpada može imati negativne posledice po životnu sredinu i ljudsko zdravlje usled potencijalno opasnih materijala koji se uglavnom vezuju za EEE. Vaša saradnja na ispravnom odlaganju ovog proizvoda će doprineti efikasnom korišćenju prirodnih resursa. Više informacija o tome kako možete da reciklirate ovaj proizvod potražite od lokalnih gradskih vlasti, komunalne službe, odobrenog plana reciklaže ili servisa za odlaganje kućnog otpada, ili posetite stranicu www.canon-europe.com/weee, ili www.canon-europe.com/battery.

When Repairing, Lending, or Disposing of the Printer

If you have entered personal data, passwords and/or other security settings on the printer, such information may be stored in the printer.

When sending the printer for repair, lending or transferring the printer to another person, or disposing of the printer, please be sure to follow the steps below in order to delete such information and prevent third parties from accessing it.

- **Initializing network settings**

  (**Setup**) > **Device settings** > **LAN settings** > **Wi-Fi** / **Wireless Direct** / **Wired LAN** > **Settings** > **Advanced** > **Reset LAN settings** > **Yes**

- **Initializing SSL information**

  (**Setup**) > **Device settings** > **LAN settings** > **Wi-Fi** / **Wireless Direct** / **Wired LAN** > **Settings** > **Advanced** > **Reset SSL certificates** > **Yes**

- **Deleting the administrator password**

  (**Setup**) > **Device settings** > **Administrator password setting** > Enter the administrator password > **OK** > **Remove administrator password** > **Yes** > **OK**

Screenshots in This Manual

For Windows:

The screenshots used in this manual are the screens that appear when the operating system Windows 10 is used.

For macOS:

The screenshots used in this manual are the screens that appear when the operating system macOS High Sierra 10.13 is used.

Basic Printing Workflow

- Printing procedure
- Canceling print jobs
- Pausing Printing

Printing procedure

- Printing Options Using Rolls and Sheets
- Turning the Printer On and Off
- Loading and Printing on Rolls
- Loading and Printing on Sheets
- Printing in Windows
- Printing from macOS

Printing Options Using Rolls and Sheets

The printer supports both rolls and sheets.

This section introduces the main features of each, as well as the main printing methods available. Select rolls or sheets to suit your particular printing application.

Note

- For information on the types of paper the printer supports, see "Types of Paper."
- A variety of other ways to print are available besides those introduced here. For details, see "Enhanced Printing Options."

Roll printing

Media in spooled rolls is generally called Roll Media. Rolls are loaded on the roll holder, which are in turn loaded in the printer.

Rolls can be used to print large photos or create posters or banners that cannot be printed on regular sheets.

- Large-format printing

  Easily print vertical or horizontal banners from familiar applications such as Microsoft Office applications.

  (See "Printing Hanging and Horizontal Banners (Large-Format Printing)" (Windows).)

  (See "Printing Hanging and Horizontal Banners (Large-Format Printing)" (macOS).)

- Borderless printing

  Print without a margin (border) around posters or photos.

  (See "Printing without Edges Based on the Scenarios" (Windows).)

  (See "Printing without Edges Based on the Scenarios" (macOS).)

- Banner printing

  You can print multiple pages as a single continuous image, without margins between pages.

  (See "Printing by Connecting Multiple Pages" (Windows).)

  (See "Printing by Connecting Multiple Pages" (macOS).)

- 90-degree rotation before printing

  Originals in portrait orientation are rotated 90 degrees when possible to use paper more efficiently.

  (See "Saving Roll Paper by Rotating Document 90 Degrees" (Windows).)

  (See "Saving Roll Paper by Rotating Document 90 Degrees" (macOS).)

- Enlarged/reduced printing

  You can freely adjust the size of originals by enlarging or reducing originals before printing.

  (See "Scaled Printing" (Windows).)

  (See "Scaled Printing" (macOS).)

- imagePROGRAF Free Layout (Windows), imagePROGRAF Free Layout (macOS) and Canon Free Layout plus (Windows)

  Print multiple documents from multiple applications (such as word-processing programs, spreadsheet programs, and so on) next to each other.

  (See "Lining Up and Printing Multiple Documents" (Windows).)

  (See "Lining Up and Printing Multiple Documents" (macOS).)

Sheet printing

Sheets refer to individual sheets of paper.

Insert the sheet between the platen and the paper retainer.

- Enlarged/reduced printing

  You can freely adjust the size of originals by enlarging or reducing originals before printing.

  (See "Scaled Printing" (Windows).)

  (See "Scaled Printing" (macOS).)

- imagePROGRAF Free Layout (Windows), imagePROGRAF Free Layout (macOS) and Canon Free Layout plus (Windows)

  Print multiple documents from multiple applications (such as word-processing programs, spreadsheet programs, and so on) next to each other.

  (See "Lining Up and Printing Multiple Documents" (Windows).)

  (See "Lining Up and Printing Multiple Documents" (macOS).)

Turning the Printer On and Off

Turning the printer on

1. Press **ON** button to turn on printer.

   The **ON** button lights up and the printer will now start up.

   The Canon logo appears on the operation panel, and then "**Starting the system...Please wait momentarily**" appears.

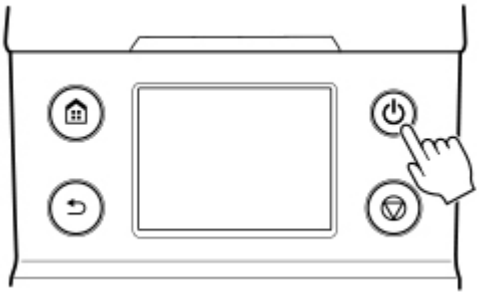

   When startup is finished, the printer enters standby mode.

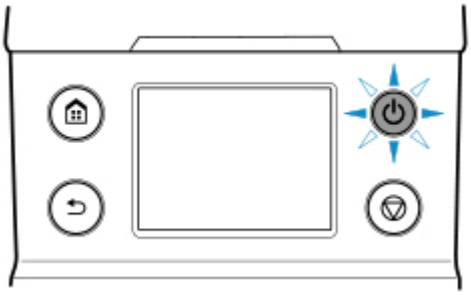

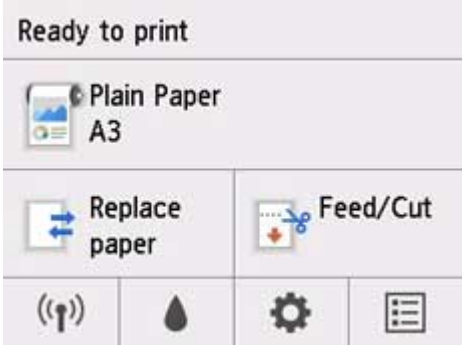

   The printer will not enter standby mode in the following situations. Take action as necessary.

   - **The top cover is open**

     Close the top cover.

   - **The ink tank cover is open**

     Close the ink tank cover.

   - **The print head is not installed**

     Replacing the Print Head

- **The ink tank is not installed**

  Replacing Ink Tanks

- **If "Error" is shown on the operation panel**

  Check the message on the operation panel and take action as necessary.

- **The ON button and Status lamp never light up, and nothing appears on the operation panel**

  Check the connection at the plug and electrical outlet.

Turning the printer off

Important

- Never disconnect the printer's power supply or unplug it during a print job. This may damage the printer.

1. Make sure no print jobs are in progress.

   While the **Status** lamp is flashing, the printer is running. The color of the lamp indicates the following states.

   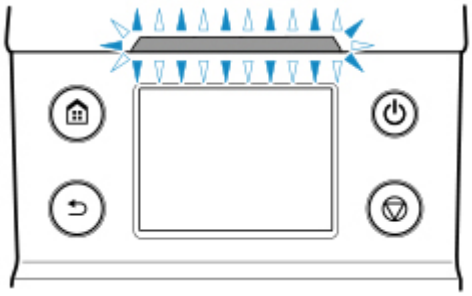

   If the **Status** lamp is flashing orange, check the message on the operation panel and take action as necessary.

   If the **Status** lamp is flashing white, the printer is printing, receiving data, etc. Turn off the power after the **Status** lamp turns off.

2. Hold down the **ON** button for more than a second.

   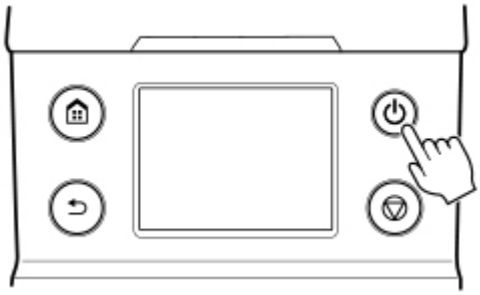

   "**Ending... Please wait momentarily**" appears on the operation panel, and the printer turns off.

Loading and Printing on Rolls

These are the basic steps for loading and printing on rolls.

Follow these steps to load and print on rolls.

Note

- For details on roll paper sizes and types that can be used, see "Paper Sizes" or "Paper Information List".
- To wait until the ink dries after printing before cutting the roll, set Drying Time in the printer driver. (See "Specifying the Ink Drying Time for Rolls.")
- Once you have used all the paper on a roll, clean the platen. If the platen inside the top cover becomes dirty, it may soil the underside of paper. (See "Cleaning Inside the Top Cover.").

1. Turn the printer on. (See "Turning the Printer On and Off.")

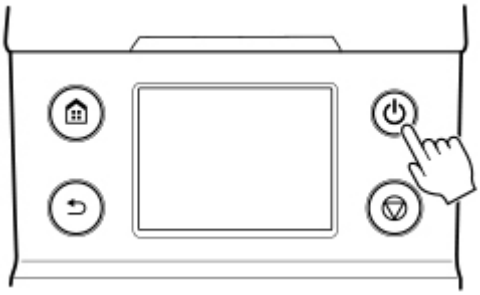

2. Load a roll on the roll holder. (See "Loading Rolls on the Roll Holder.")

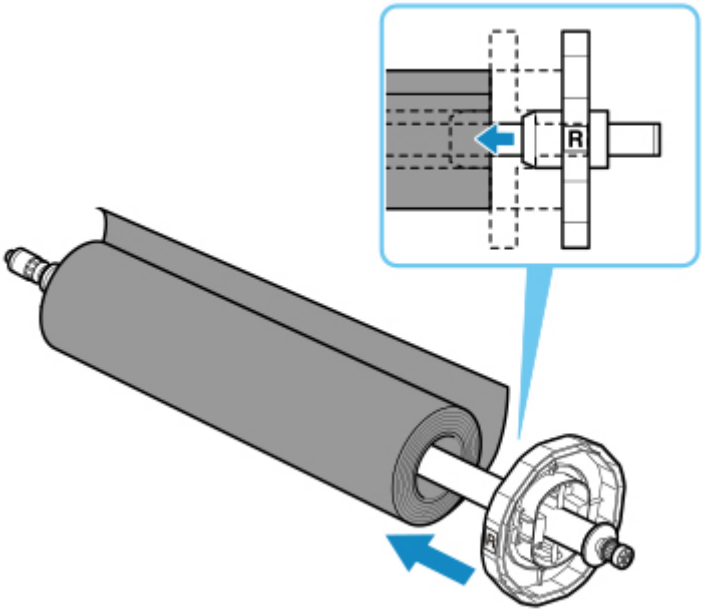

3. Load the Roll Media in the printer. (See "Loading Rolls in the Printer")

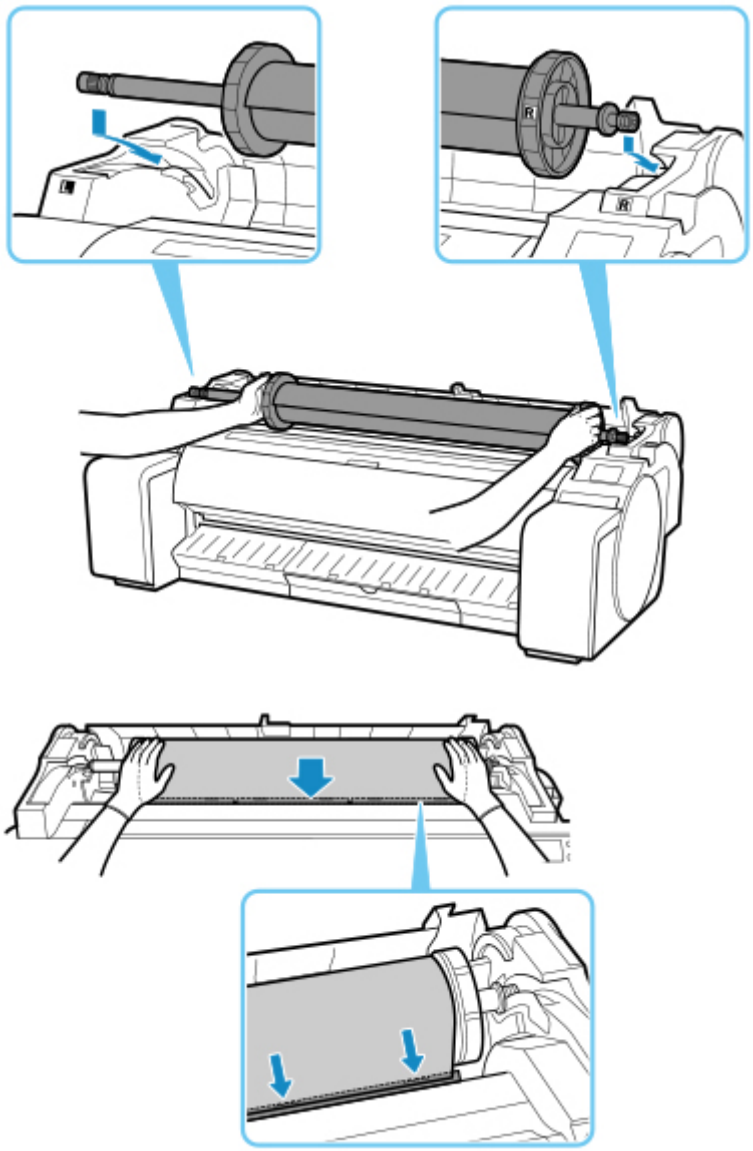

4. Select the type of paper. (See "Changing the Type of Paper.")

Note

- If no barcode has been printed on the roll paper and you have set **Manage remaining roll amount** to **Barcodes**, specify the roll length after selecting the media type. (See "Specifying the Paper Length.")

5. Complete settings in the printer driver for the type of paper and other details.

- How to Open the Printer Driver Setup Window (Windows)
- How to Open the Printer Driver Setup Dialog (macOS)

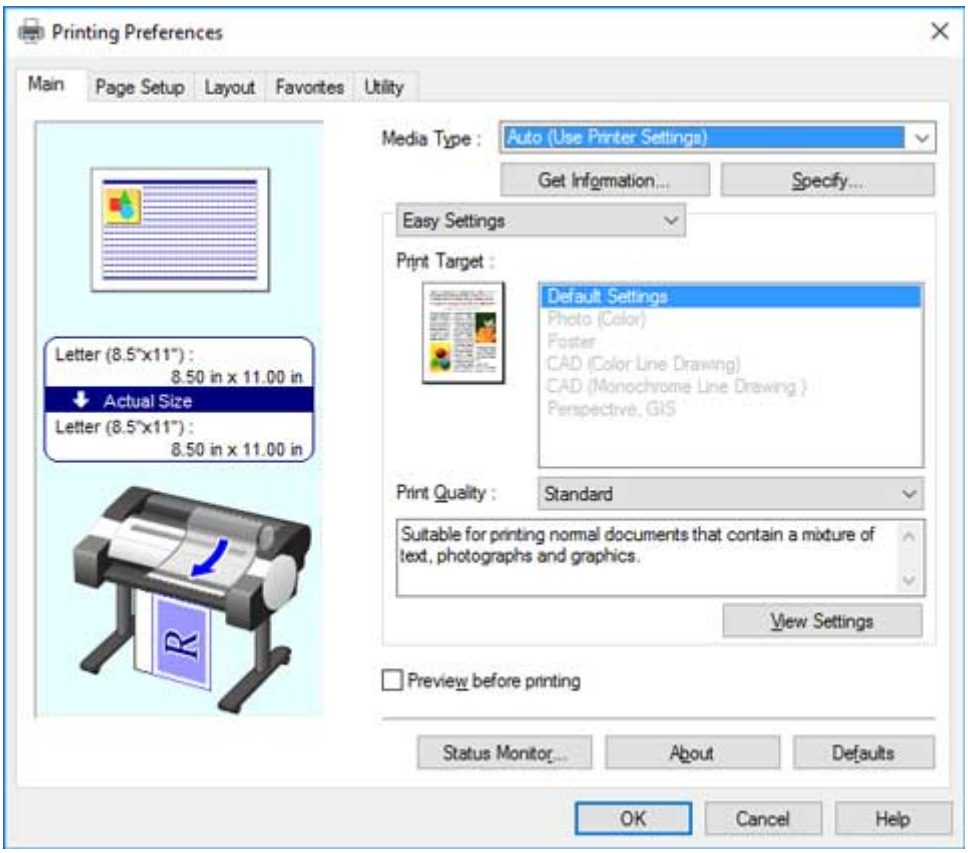

6. Send the print job.

- Printing in Windows
- Printing from macOS

Start printing.

Important

- Do not move the release lever during printing.

Loading and Printing on Sheets

These are the basic steps for loading sheets and then printing.

Follow the steps below to load and print on sheets.

Note

- For details on paper sizes and types that can be loaded, see "Paper Sizes" or "Paper Information List".
- Borderless printing is not supported on sheets. For the features and the main printing methods available for sheet printing, see "Printing Options Using Rolls and Sheets."

1. Turn the printer on. (See "Turning the Printer On and Off.")

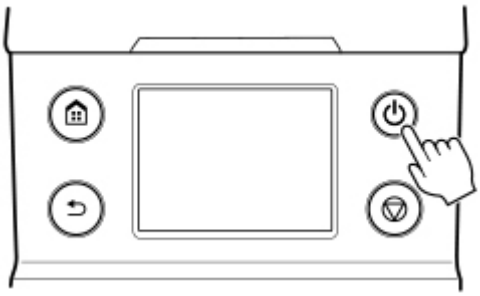

2. Complete settings in the printer driver for the type of paper and other details.

   - How to Open the Printer Driver Setup Window (Windows)
   - How to Open the Printer Driver Setup Dialog (macOS)

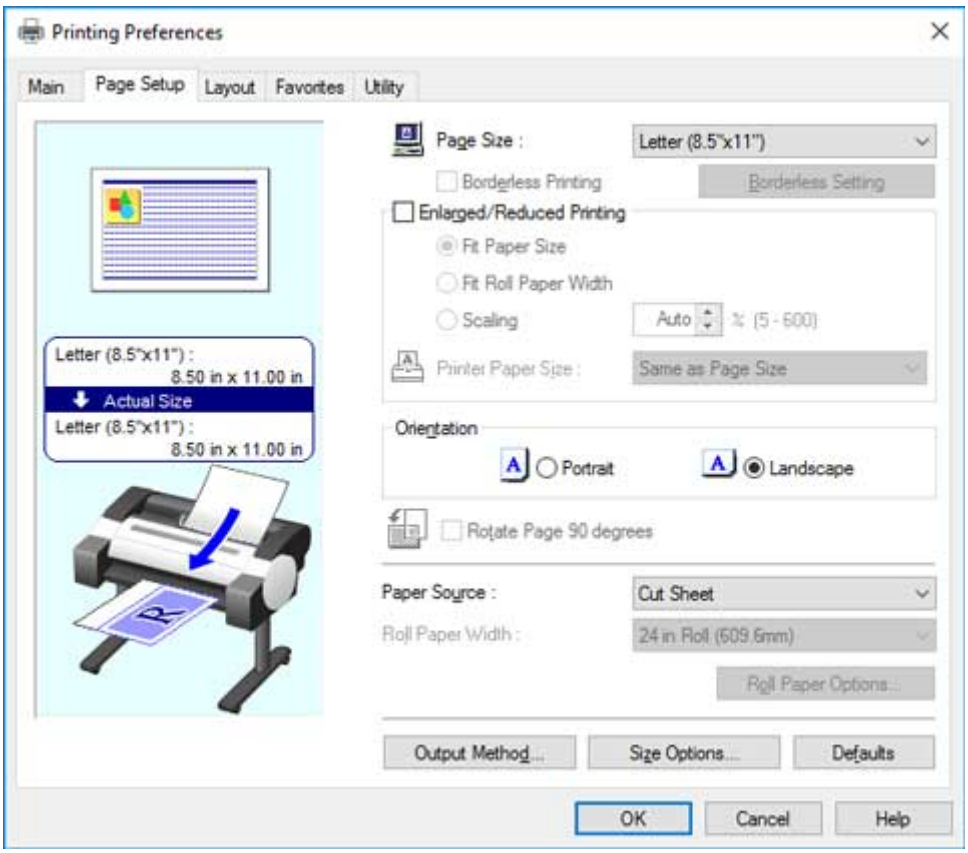

3. Send the print job.

- Printing in Windows
- Printing from macOS

4. Load the sheet. (See "Loading Sheets in the Printer.")

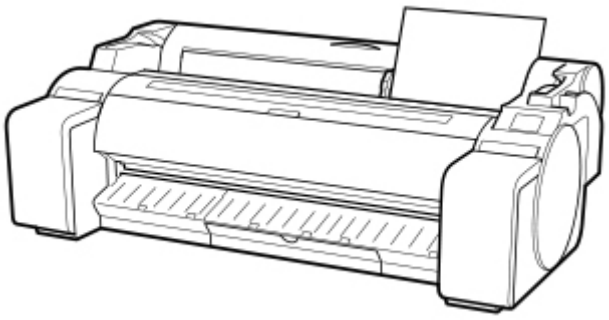

Start printing.

Important

- Do not move the release lever until instructions (guidance) for removing the paper are displayed. Moving the release lever during printing will cause printing to stop.

Printing in Windows

Print from the application menu.

Important

- We recommend exiting unnecessary applications before printing. Running several applications while printing may interrupt the transfer of print data and affect printing quality.

1. In the source application, select **Print** from the **File** menu to display the dialog box for printing conditions.

2. After confirming that the printer is selected in the dialog box, click **Print** or **OK** to start printing.

   ### Note

   - The appearance of the dialog box varies depending on the software application. In most cases, the dialog box includes basic printing options and enables you to choose the printer, specify the range of pages, number of copies, and so on.

     Example: Print dialog box displayed by the application

     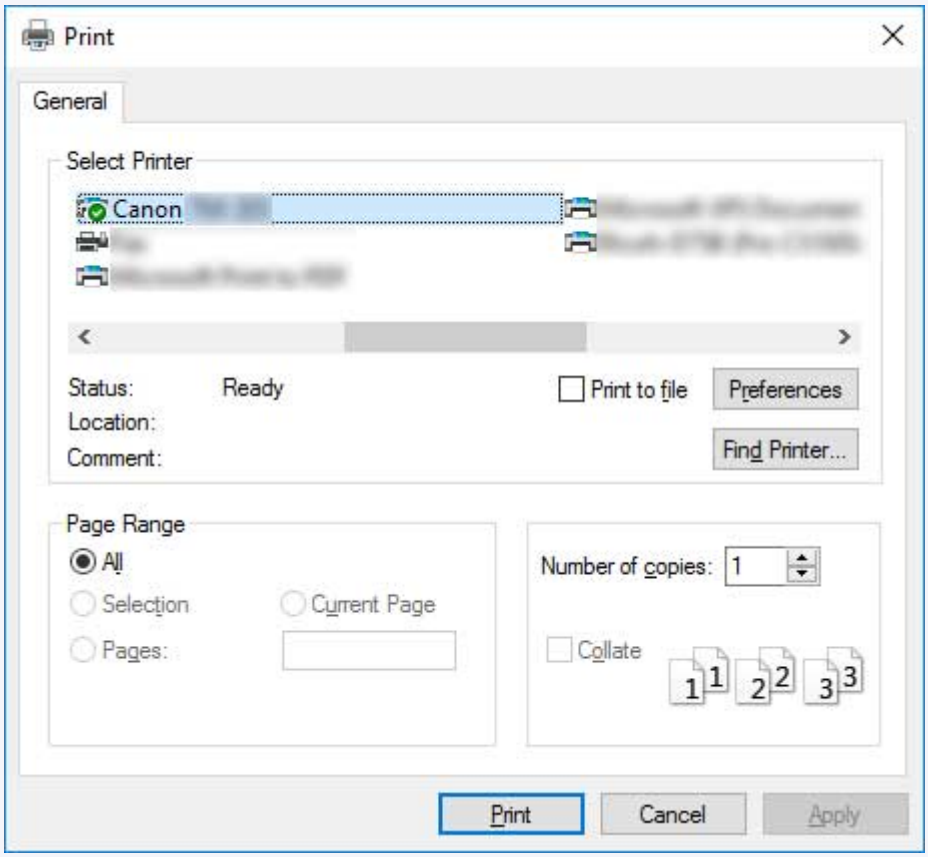

   - If another printer is selected, select the printer you want to use under **Select Printer** or in the dialog box displayed after clicking **Printer**.

You can use the printer driver dialog box to configure various printing settings such as for enlarged or reduced printing and borderless printing. You can open the printer driver dialog box from the application software or from the operating system menu. For details, see "How to Open the Printer Driver Setup Window" (Windows) or "How to Open the Printer Driver Setup Dialog" (macOS).

Printing from macOS

Print from the application menu after registering the printer.

Important

- We recommend exiting unnecessary applications before printing. Running several applications while printing may interrupt the transfer of print data and affect printing quality.

Registering the printer

The printer needs to be registered in **Print & Scan** (identified as Printers & Scanners or **Print & Fax** in other versions of macOS X) in **System Preferences** before printing.

For instructions on registering printers, see "Sharing the Printer on a Network (macOS)."

Important

- During this setup process, the printer will not be listed among available printers if it is off or disconnected.

Printing from the application software

1. In the application software, select **Print** from the **File** menu to display the dialog box for printing conditions.

   Note

   - This dialog box includes basic printing options and enables you to choose the printer, specify the range of pages, number of copies, and so on.

2. Select the printer in the **Printer** list.

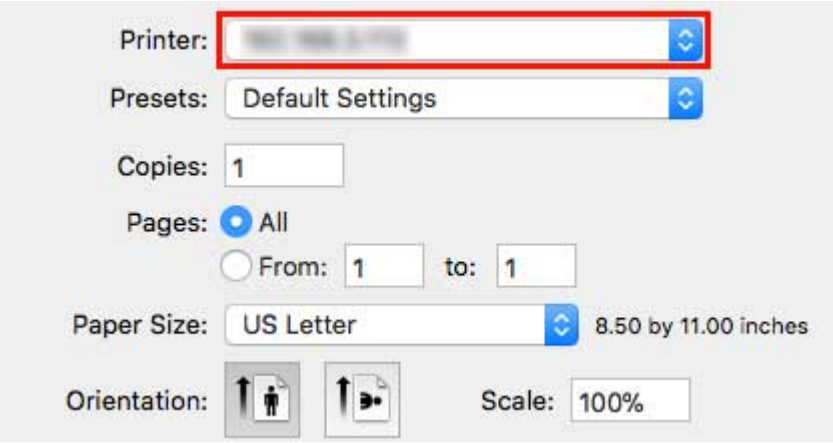

3. Click **Print** to start printing.

As shown in the following illustration, you can switch to other panes in this dialog box to complete settings for various methods of printing, including enlarged and reduced printing, borderless printing, and so on.

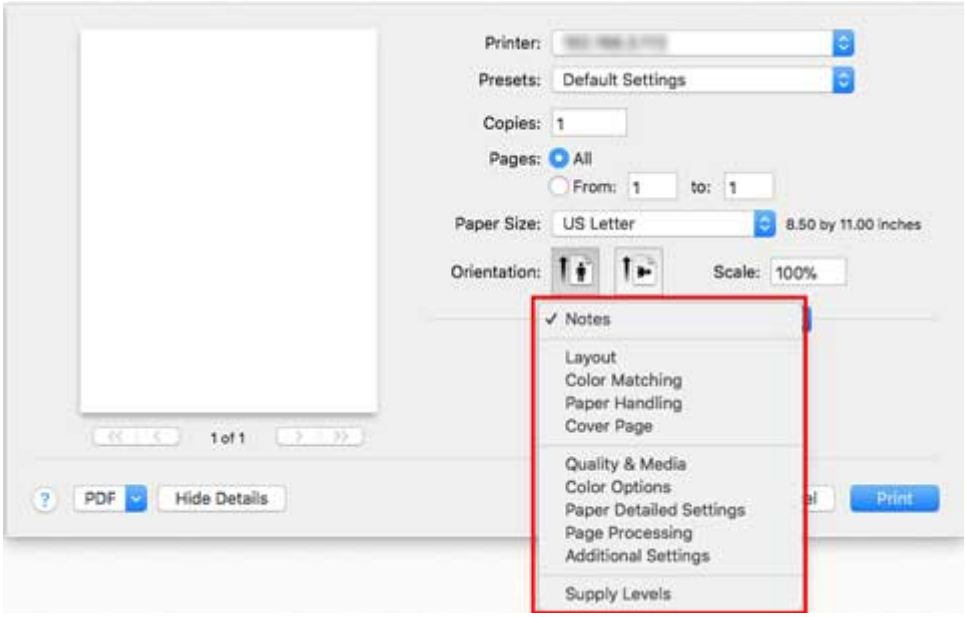

Canceling print jobs

- Canceling Print Jobs from the Operation Panel
- Canceling Print Jobs from Windows
- Canceling Print Jobs from macOS

Canceling Print Jobs from the Operation Panel

To cancel printing or reception of print jobs, press the **Stop** button on the operation panel.

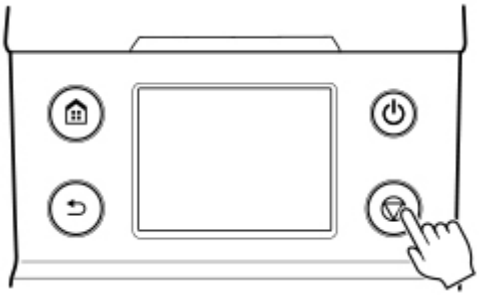

When you press the **Stop** button during printing, the printer operation varies depending on the current status.

- **You press the Stop button before printing starts**

  Pressing the **Stop** button before printing starts displays a confirmation message. To cancel the print job, select **Yes**.

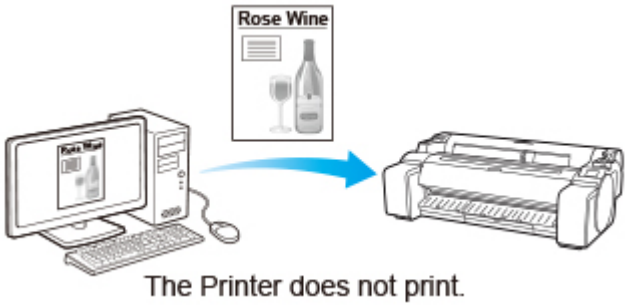

- **You press the Stop button during printing**

  Pressing the **Stop** button during printing displays a confirmation message. To cancel the print job immediately, select **Yes**.

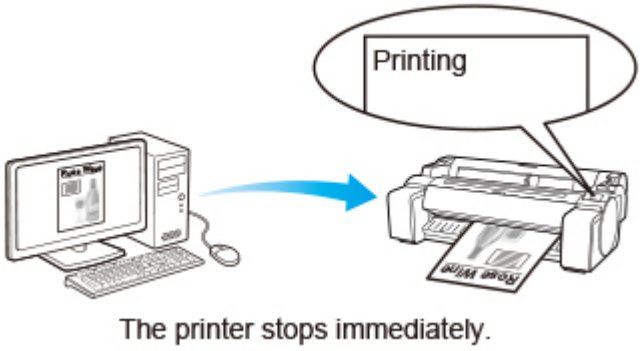

Canceling Print Jobs from Windows

In the printer window, you can cancel jobs that are being sent to the printer.

Using CanonIJ Status Monitor, you can cancel print jobs that have already been received by the printer or that are currently being printed.

1. Click the printer icon in the taskbar to display the printer window.

   Note

   - You can proceed from the folder for configuring the printer settings in the OS you are using.

     For example, in Windows 7, open the **Devices and Printers** window from the **start** menu and double-click the printer icon.

2. Right-click the job to cancel and select Cancel.

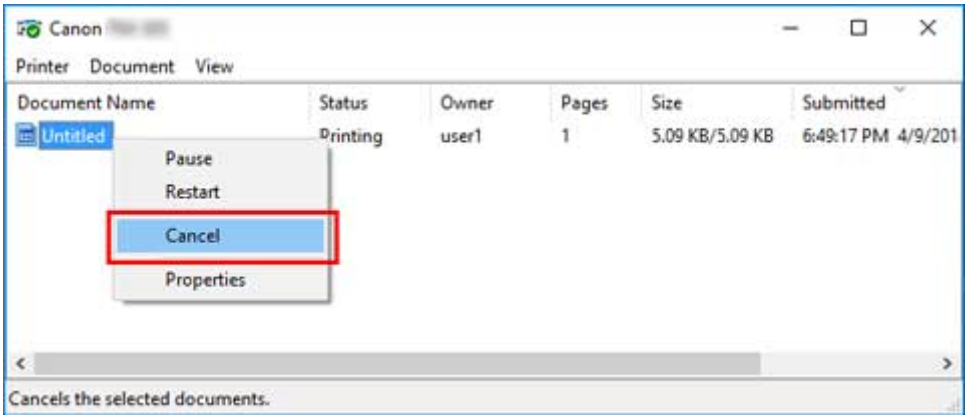

3. If job to be canceled is not shown in printer window (that is, if print data has already been received by printer), click taskbar icon to display CanonIJ Status Monitor.

4. Click **Cancel Printing**.

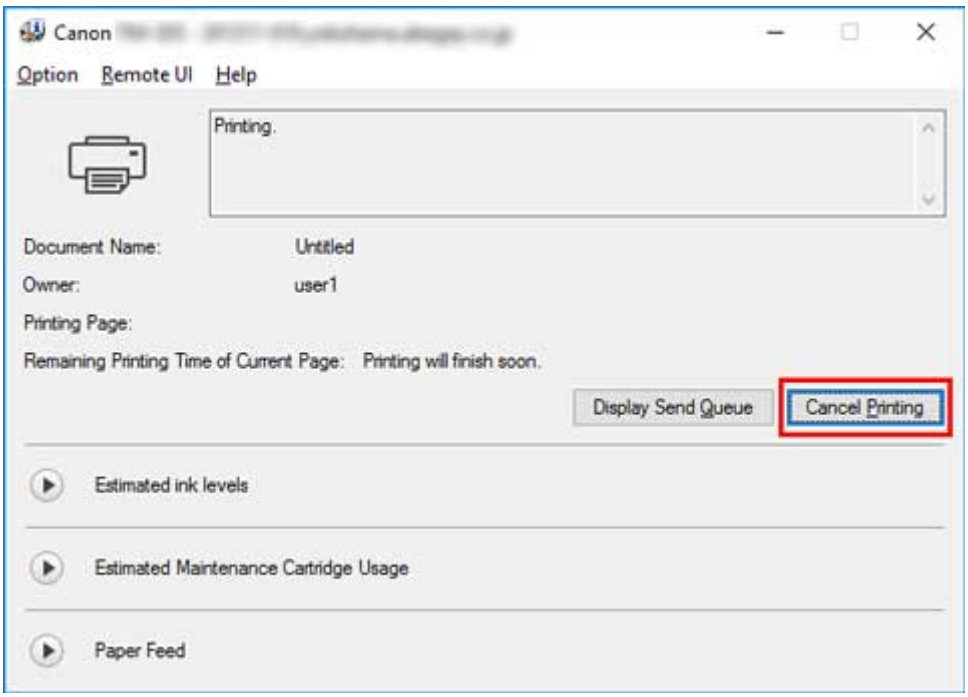

Note

- The screen may differ slightly depending on the model you are using.

Canceling Print Jobs from macOS

In the printer window, you can cancel jobs that are being sent to the printer.

Note

- Print jobs are shown in the printer window while they are being sent from the computer. After transmission, jobs are not displayed even during printing.

1. Click the printer icon in the **Dock** to display the printer window.

2. Either click × for the job to cancel printing or select the job to cancel printing and then click **Delete** to delete the job.

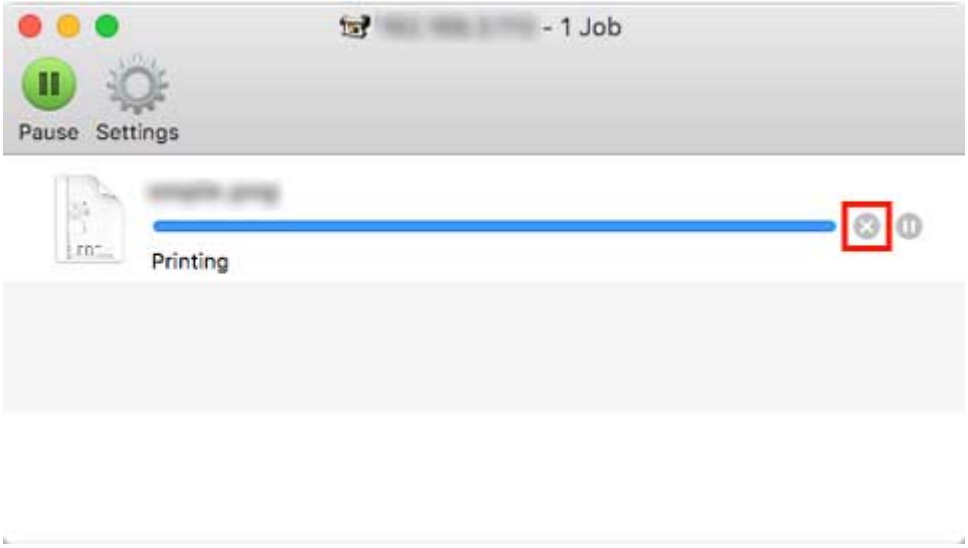

Note

- If the job to be canceled is not shown in the printer window (that is, if the print data has already been received by the printer), you can cancel printing from the operation panel on the printer or from RemoteUI. For details, "Canceling Print Jobs from the Operation Panel" or see "Configuration Changes Using Web Browser."

Pausing Printing

➤ Pausing Printing

Pausing Printing

During printing, if you set **Pause printing** to **Enable**, the printer enters a state in which printing is paused, after the completion of the printing process when this setting was made.

Printing from the job queue is not possible in this state.

To restore normal operation after pausing printing, set **Pause printing** to **Disable**.

Note

- In the following cases, the status is cleared even if you do not set **Pause printing** to **Disable**, and printing from the job queue resumes.
  - When paper is advanced
  - If you changed the media type from the paper settings display area

1. Tap (**Jobs**) on Home screen during printing.

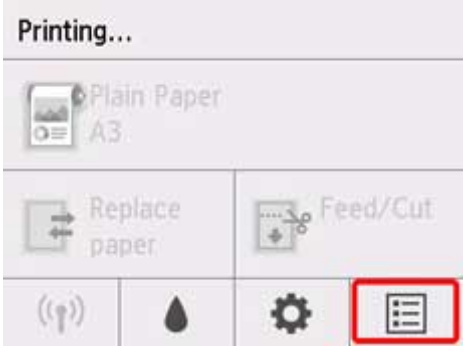

Note

- If the Home screen does not appear, press the **HOME** button.

2. Tap **Pause printing**.

3. Tap **Enable** or **Disable**.

Enhanced Printing Options

Printing from Your Computer (Windows)

- Printing with Easy Setup Basics
  - Changing the Type of Paper
- Setting the Number of Copies and Printing Order
- Printing Photos and Business Documents
  - Printing By Setting Print Purpose
  - Edit in PosterArtist and Print
- Printing CAD Drawings
  - Printing By Setting Print Purpose
  - Printing from AutoCAD
- Changing the Print Quality and Correcting Image Data
  - Adjusting Color Balance
  - Setting the Print Quality Level (Custom)
  - Printing a Color Document in Monochrome
  - Specifying Color Correction
    - Optimal Photo Printing of Image Data
    - Adjusting Colors with the Printer Driver
    - Printing with ICC Profiles
  - Adjusting Brightness
  - Adjusting Contrast
  - Printing Using Detailed Setting Mode
- Scaled Printing
- Printing to Oversized Paper Sizes
- Setting Paper Dimensions (Custom Size)
- Printing without Edges Based on the Scenarios
  - Printing without Margins to Match Paper Size
  - Printing without Margins to Match Roll Paper Width

- Printing Full-Size without Margins
- Printing Hanging and Horizontal Banners (Large-Format Printing)
- Printing by Dividing/Joining Documents
  - Laying out a Multiple-File Document on One Page
  - Lining Up and Printing Multiple Documents to Cut Sheets
  - Printing by Connecting Multiple Pages
  - Printing Multiple Pages All on One Page
  - Dividing and Printing Posters
- Printing Document in Center of Paper
- Printing by Saving Roll Paper
  - Saving Roll Paper by Rotating Document 90 Degrees
  - Saving Roll Paper by Eliminating Upper and Lower Margins on Document
- Switching the Paper Source to Match the Purpose
- Displaying the Print Results before Printing
- Other Convenient Settings
  - Stamp Printing
    - Registering a Stamp
  - Setting a Page Size and Orientation
  - Registering a Frequently Used Printing Profile
  - Cutting Roll Paper after Printing

Printing from Computer (macOS)

- Printing with Easy Setup Basics
  - Changing the Type of Paper
- Setting the Number of Copies and Printing Order
- Changing the Print Quality and Correcting Image Data
  - Adjusting Color Balance
  - Setting the Print Quality Level (Custom)
  - Printing a Color Document in Monochrome
  - Specifying Color Correction

- Optimal Photo Printing of Image Data
- Adjusting Colors with the Printer Driver
- Printing with ICC Profiles (Specifying an ICC Profile from the Application Software)
- Printing with ICC Profiles (Specifying an ICC Profile from the Printer Driver)
- Adjusting Brightness
- Adjusting Contrast
- Scaled Printing
- Printing to Oversized Paper Sizes
- Setting Paper Dimensions (Custom Size)
- Print Area
- Printing without Edges Based on the Scenarios
  - Printing without Margins to Match Roll Paper Width
  - Printing Full-Size without Margins
- Printing Hanging and Horizontal Banners (Large-Format Printing)
- Printing by Dividing/Joining Documents
  - Lining Up and Printing Multiple Documents
  - Printing by Connecting Multiple Pages
  - Printing Multiple Pages All on One Page
- Printing Document in Center of Paper
- Printing by Saving Roll Paper
  - Saving Roll Paper by Rotating Document 90 Degrees
  - Saving Roll Paper by Eliminating Upper and Lower Margins on Document
- Switching the Paper Source to Match the Purpose
- Cutting Roll Paper after Printing
- Printing Using AirPrint

HP-GL/2 Printing

Printing from Smartphone/Tablet

- Connecting Smartphone/Tablet to Printer Directly (Wireless Direct)

- Printing from iOS Device (AirPrint)

Printing from Computer (macOS)

- Printing with Easy Setup Basic
- Setting the Number of Copies and Printing Order
- Changing the Print Quality and Correcting Image Data
- Scaled Printing
- Printing to Oversized Paper Sizes
- Setting Paper Dimensions (Custom Size)
- Print Area
- Prints without Edges Based on the Scenarios
- Printing Hanging and Horizontal Banners (Large-Format Printing)
- Printing by Dividing/Joining Documents
- Printing Document in Center of Paper
- Printing by Saving Roll Paper
- Switching the Paper Source to Match the Purpose
- Cutting Roll Paper after Printing
- Printing Using AirPrint

Printing with Easy Setup

The simple setup procedure for carrying out appropriate printing on this printer is as follows:

1. Check that printer is turned on

2. Load paper on the printer

   Set roll paper or cut paper.

3. Select the printer

   Select your model from the **Printer** list in the Print Dialog.

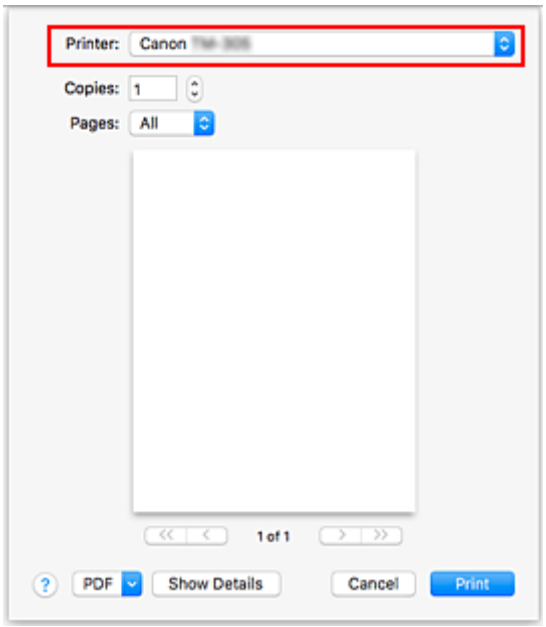

Note

- Click **Show Details** to switch the Setup window to the detailed display.
  However, depending on the application you are using, **Show Details** may not be displayed.

4. Select the paper size

   For **Paper Size**, select the paper size to be used.
   If necessary, set the number of copies, the pages to be printed, and the orientation.

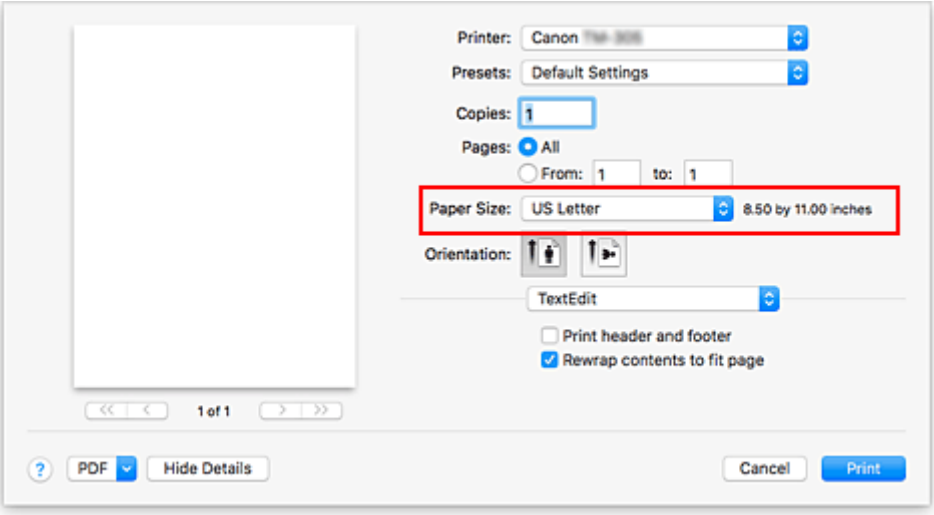

5. Select **Quality & Media** from the pop-up menu

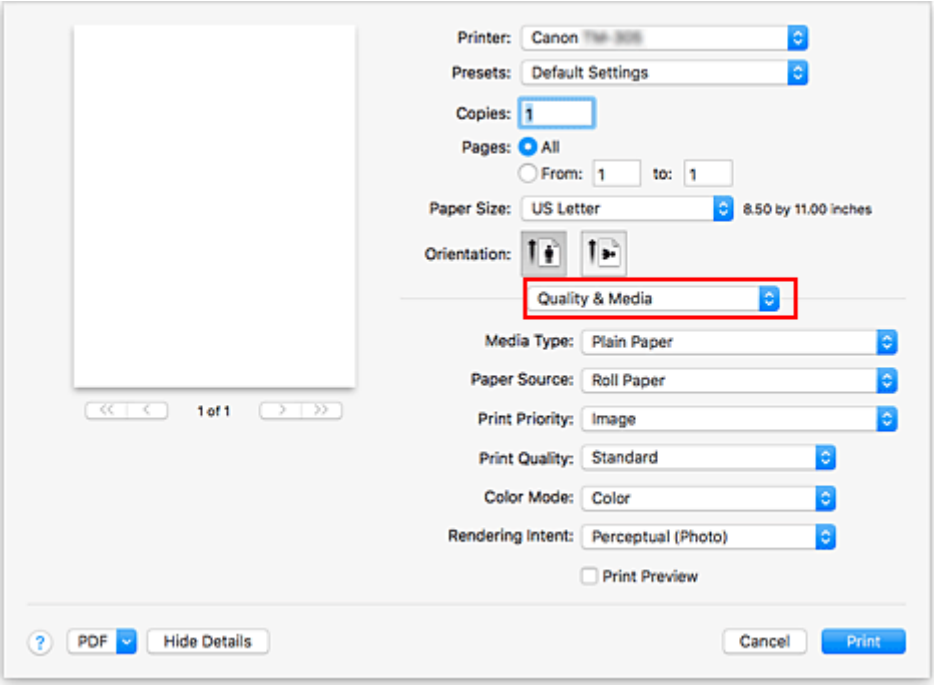

6. Select the media type

For **Media Type**, select the same paper type loaded in the printer.
If **Auto (Use Printer Settings)** is selected, the paper configured in printer settings is printed.

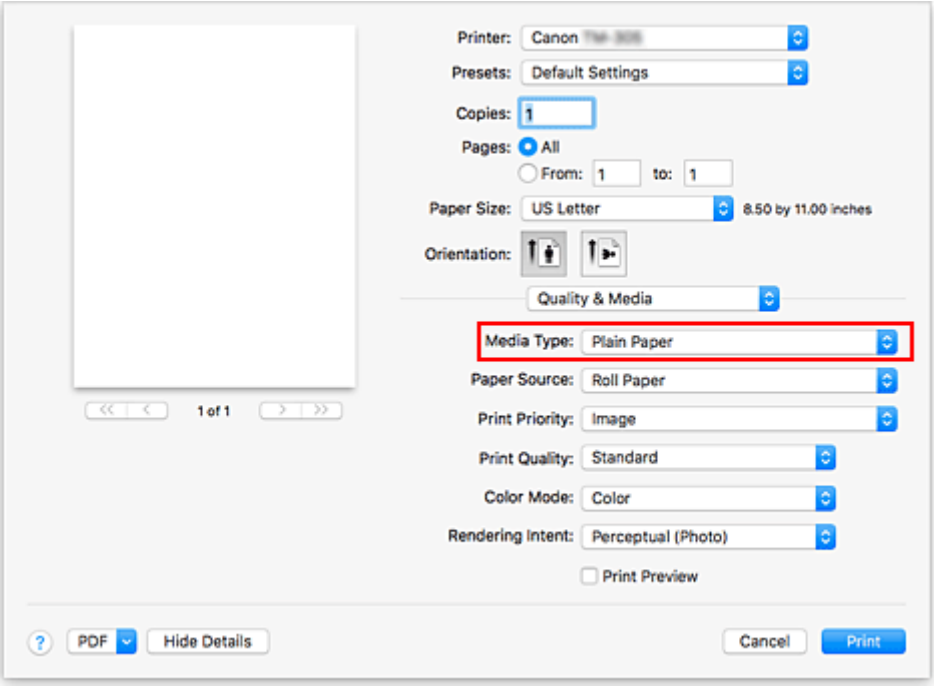

Important

- In the **Presets** section, click **Save Current Settings as Preset...** to register the specified settings.
- See "Paper Information List" for Canon authentic paper or Canon output check paper.

7. Select the paper source

For **Paper Source**, select the setting that matches your purpose.

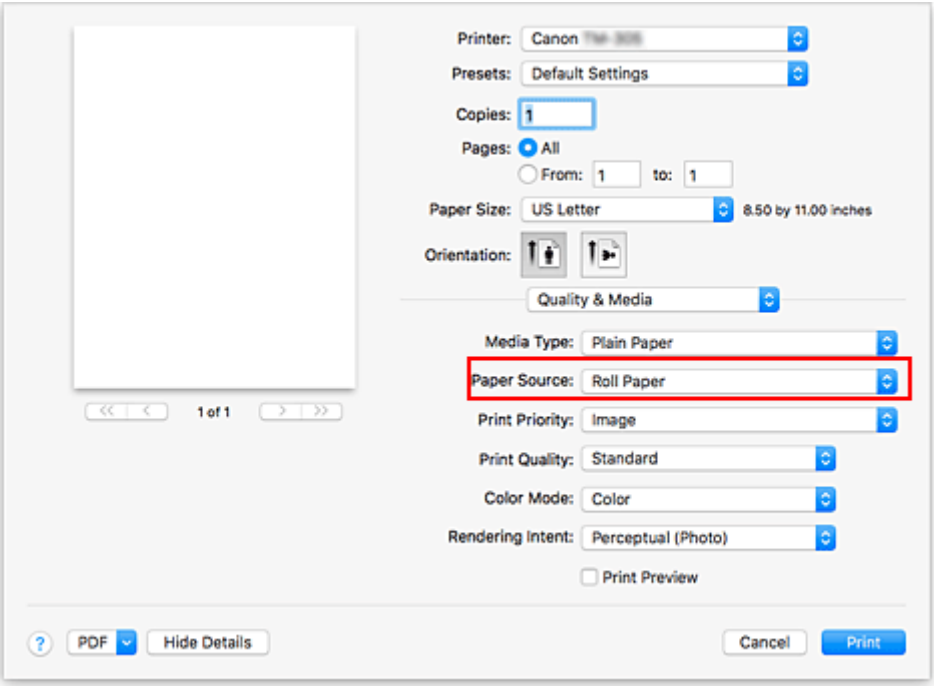

Important

- The paper feed method will differ according to the paper settings.

8. Select print priority

For **Print Priority**, select **Image**, **Line Drawing/Text**, or **Auto (Use Printer Settings)** according to your purpose.

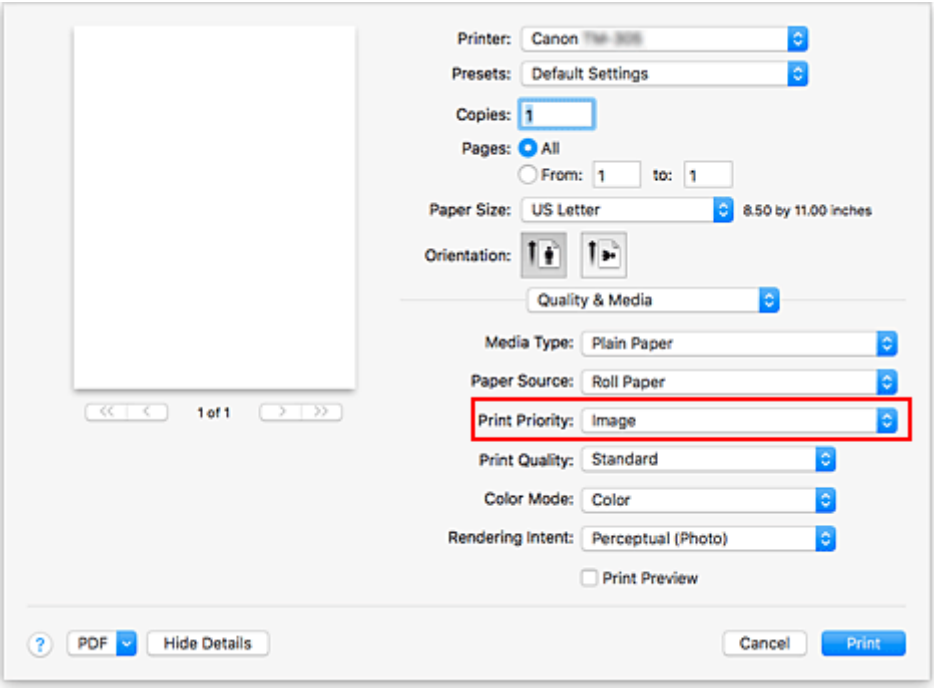

Important

- The selectable print priority differs depending on media type settings.

9. Select the print quality

For **Print Quality**, select **High**, **Standard** or **Fast** according to your purpose.

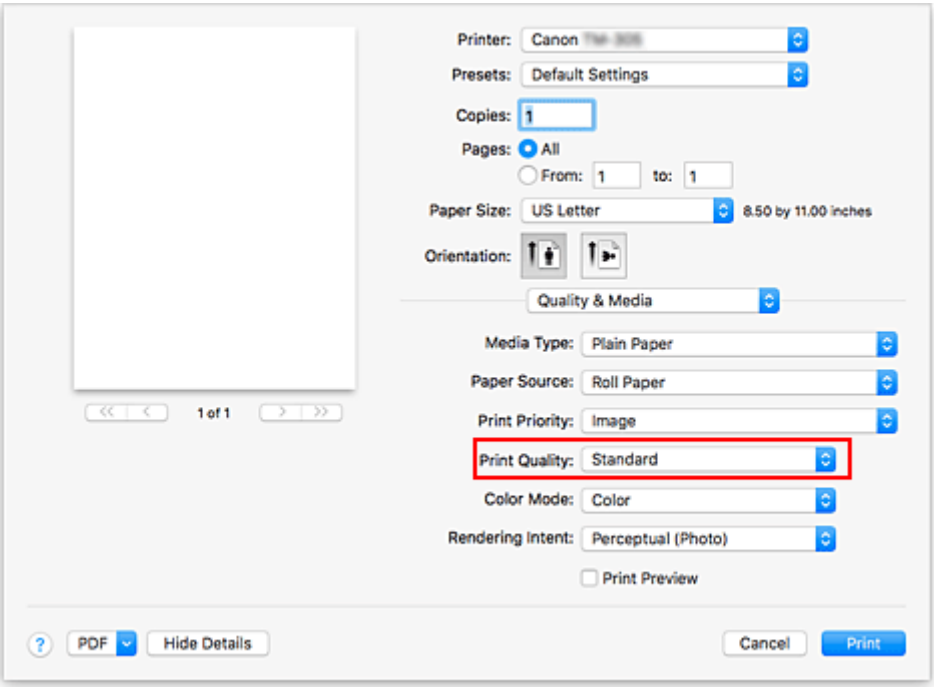

Important

- The print quality settings that can be selected may differ depending on a printing profile.

10. Select **Page Processing** from the pop-up menu

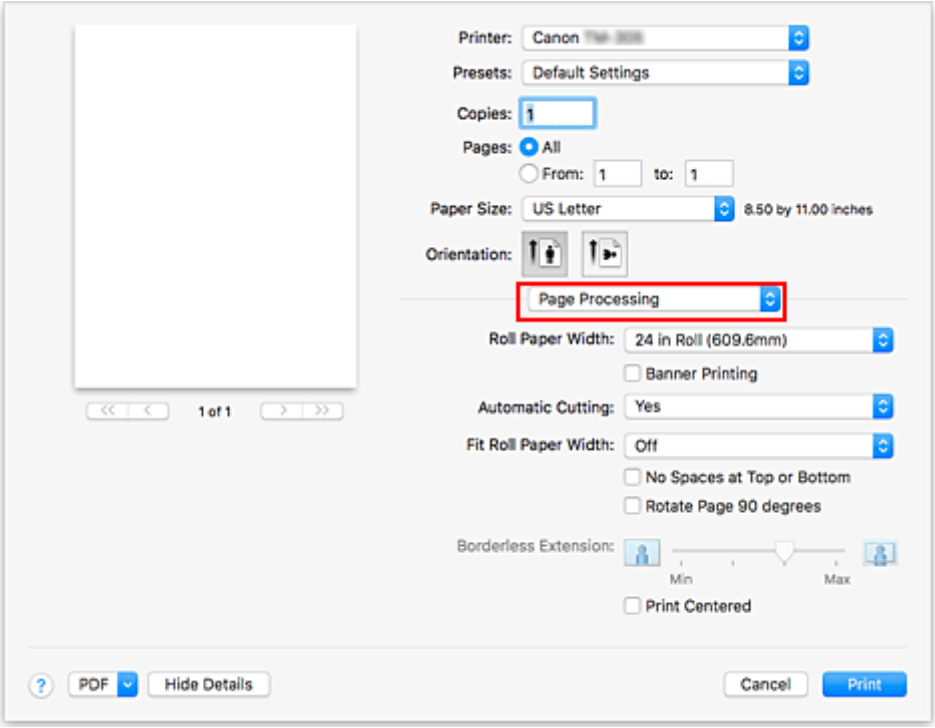

11. Selecting Roll Paper Width

If you selected a roll paper for **Paper Source**, set **Roll Paper Width** to the width of the roll paper loaded in the printer.

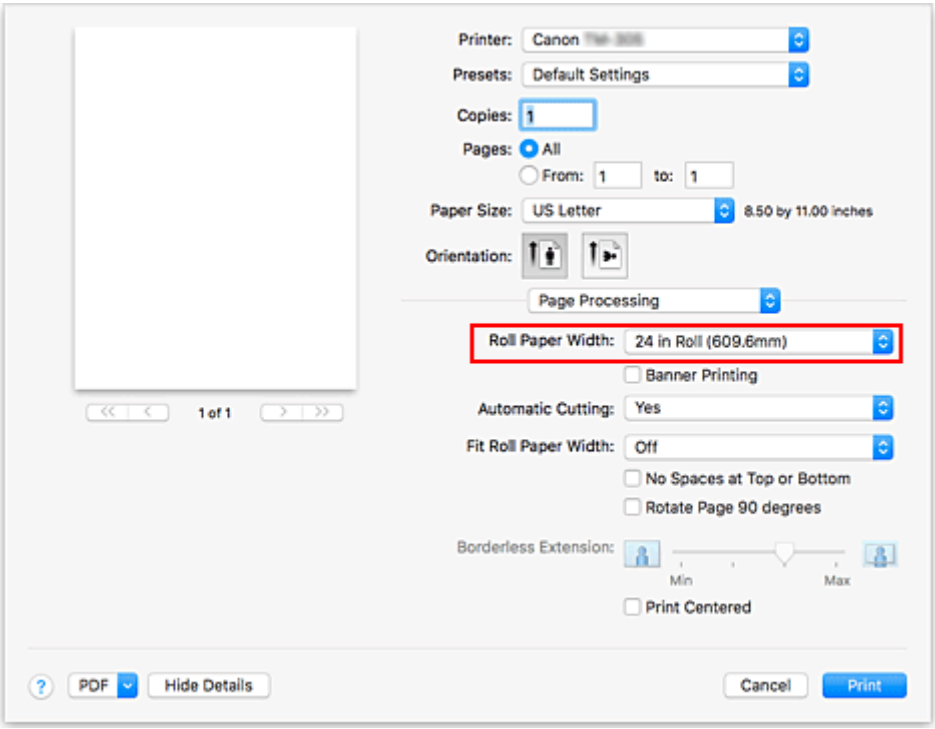

Important

- If **Cut Sheet** is selected for **Paper Source** in **Quality & Media**, **Roll Paper Width** is grayed out and cannot be set.

12. Complete the setup

Click **Print**.
When you execute print, the document will be printed in accordance with the type and size of the media.

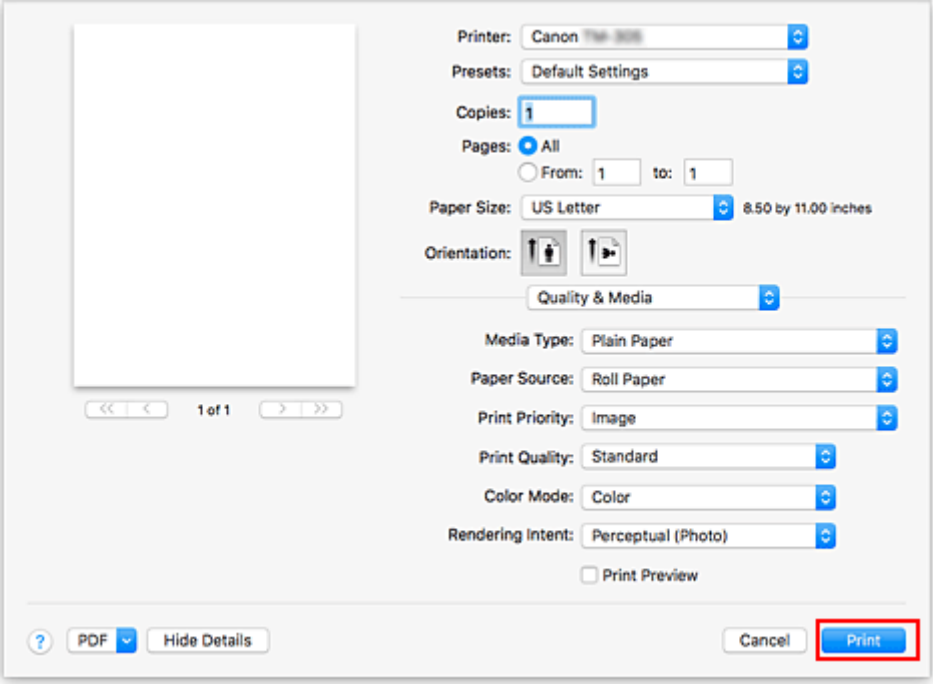

Note

- If the paper settings in the printer driver differ from the paper information registered on the printer, an error message may appear on the printer's operation panel. You can still print but you may not be able to obtain correct print results.

Setting the Number of Copies and Printing Order

Collate pages + Reverse **Collate pages + Normal** **Reverse**

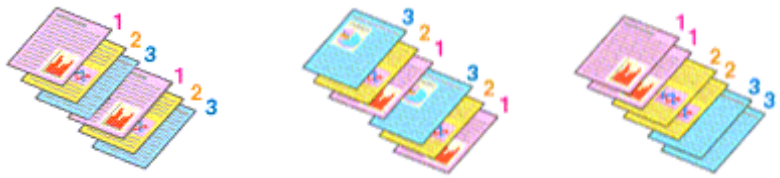

The procedure for specifying the number of copies and printing order is as follows:

1. Specify the number of copies to be printed

   Specify the number of copies to print from the **Copies** in the Print Dialog.

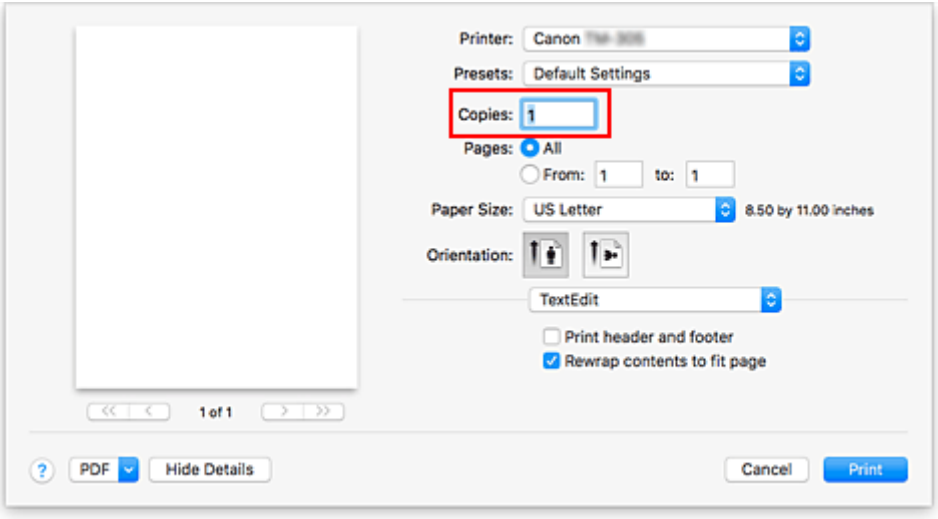

2. Select **Paper Handling** from the pop-up menu

3. Check the **Collate pages** check box when you are specifying multiple copies in the **Copies** box

   Check the **Collate pages** check box to print all the pages of a single copy together.
   Uncheck this check box to print all pages with the same page number together.

4. Specify the print order

   Check **Page Order**.

   When you select **Reverse**, printing starts from the last page.
   When you select **Automatic** or **Normal**, printing starts from the first page.

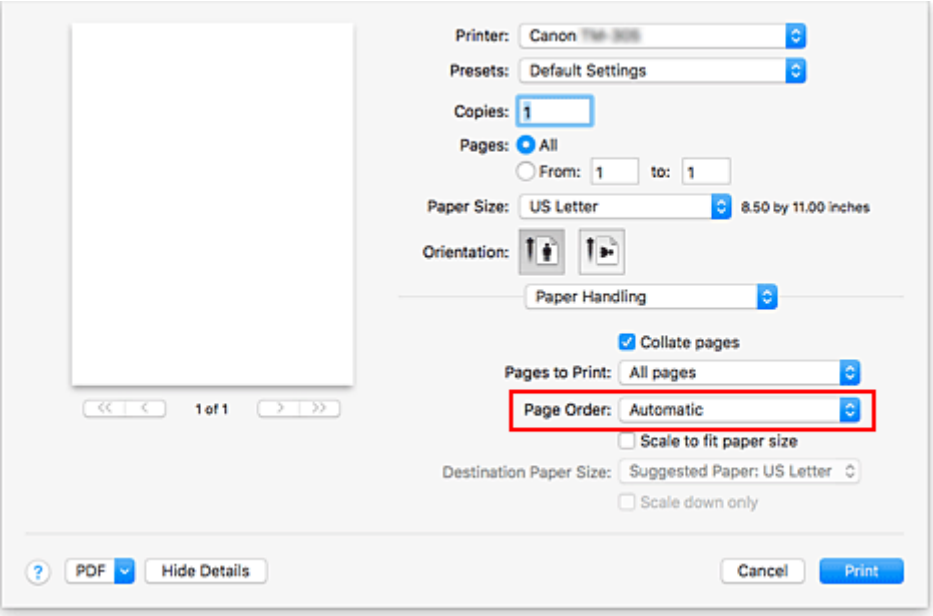

5. Complete the setup

Click **Print**.

When you execute print, the specified number of copies will be printed with the specified printing order.

Important

- When the application software that you used to create the document has the same function, specify the settings on the printer driver. However, if the print results are not acceptable, specify the function settings on the application software. When you specify the number of copies and the printing order with both the application software and this printer driver, the number of copies may be multiplied numbers of the two settings or the specified printing order may not be enabled.

Changing the Print Quality and Correcting Image Data

- Adjusting Color Balance
- Setting the Print Quality Level (Custom)
- Printing a Color Document in Monochrome
- Specifying Color Correction
- Adjusting Brightness
- Adjusting Contrast

Adjusting Color Balance

You can adjust the color tints when printing.
Since this function adjusts color balance of the output by changing the ink ratios of each color, it changes the total color balance of the document. Use the application software when you want to change the color balance significantly. Use the printer driver only when you want to adjust the color balance slightly.
The following sample shows the case when color balance is used to intensify cyan and to diminish yellow so that the overall colors are more uniform.

No adjustment

Adjust color balance

The procedure for adjusting color balance is as follows:

1. Select **Color Options** from the pop-up menu of the Print Dialog

2. Adjust color balance

   There are individual sliders for **Cyan**, **Magenta**, and **Yellow**. Each color becomes stronger when the corresponding slider is moved to the right, and becomes weaker when the corresponding slider is moved to the left. For example, when cyan becomes weaker, the color red becomes stronger.
   You can also directly enter a value linked to the slider. Enter a value in the range from -50 to 50. The current settings are displayed in the settings preview on the left side of the printer driver.

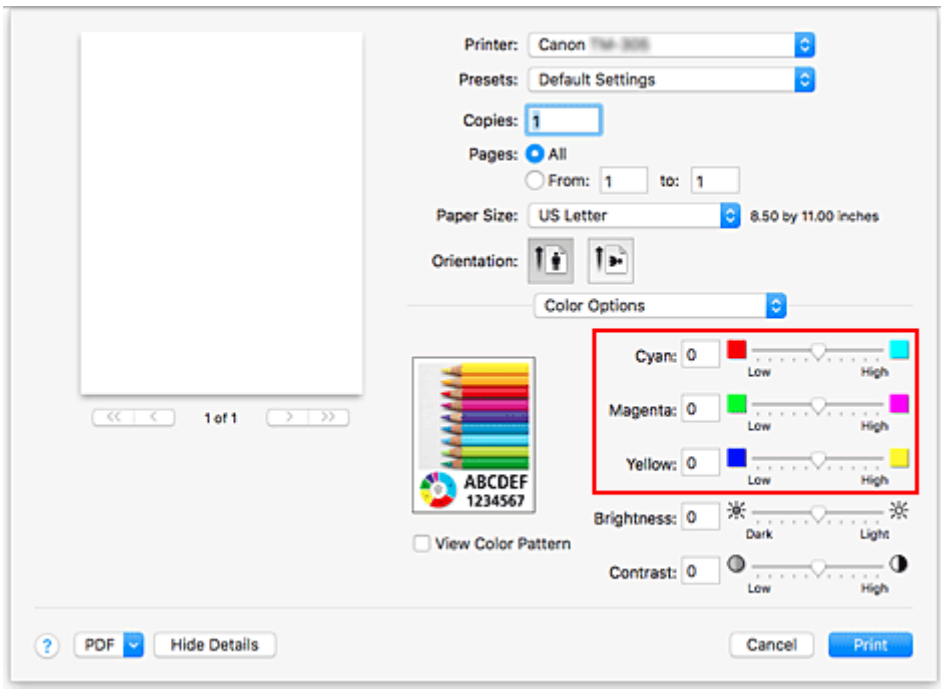

3. Complete the setup

   Click **Print**.
   When you execute print, the document is printed with the adjusted color balance.

Important

- When **Monochrome** or **Monochrome Bitmap** is selected in **Color Mode** under **Quality & Media**, the color balance (**Cyan**, **Magenta**, **Yellow**) are unavailable.
- If you select **ColorSync** for **Color Matching**, then the color balance (**Cyan**, **Magenta**, **Yellow**) appear grayed out and are unavailable.

Related Topics

- Setting the Print Quality Level (Custom)
- Specifying Color Correction
- Adjusting Brightness
- Adjusting Contrast

Setting the Print Quality Level (Custom)

The print quality level can be set in the **Custom**.

The procedure for setting the print quality level is as follows:

1. Select **Quality & Media** from the pop-up menu on the Print Dialog

2. Select the print quality

   Select **Custom** for **Print Quality**.

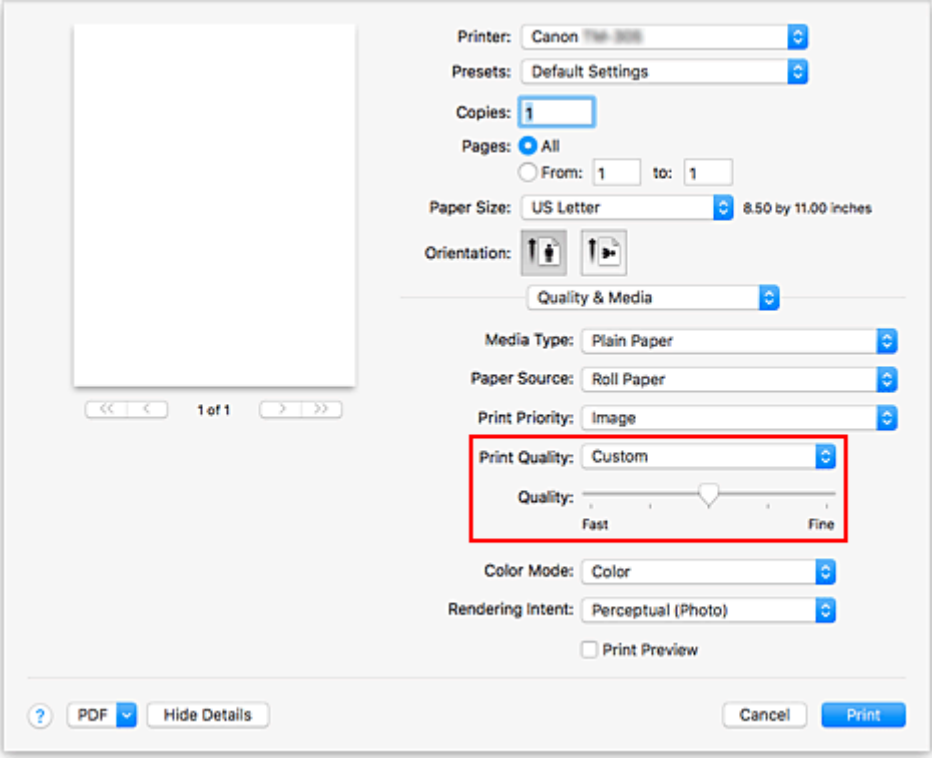

   Important

   - If **Auto (Use Printer Settings)** is selected for **Media Type**, **Custom** cannot be selected.

3. Setting the print quality level

   Move the **Quality** slider to select the print quality level.

   Important

   - Certain print quality levels cannot be selected depending on the settings of media type.

4. Complete the setup

   Click **Print**.
   When you execute print, the image data is printed with the selected print quality level.

Related Topics

- Specifying Color Correction
- Adjusting Color Balance
- Adjusting Brightness
- Adjusting Contrast

Printing a Color Document in Monochrome

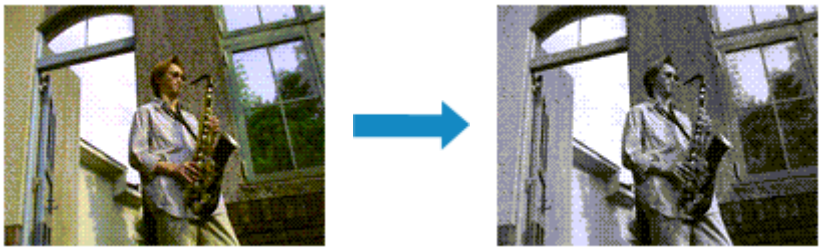

The procedure for printing a color document in monochrome is as follows:

1. Select **Quality & Media** from the pop-up menu on the Print Dialog

2. Set monochrome printing

   Select **Monochrome** or **Monochrome Bitmap** in **Color Mode**.

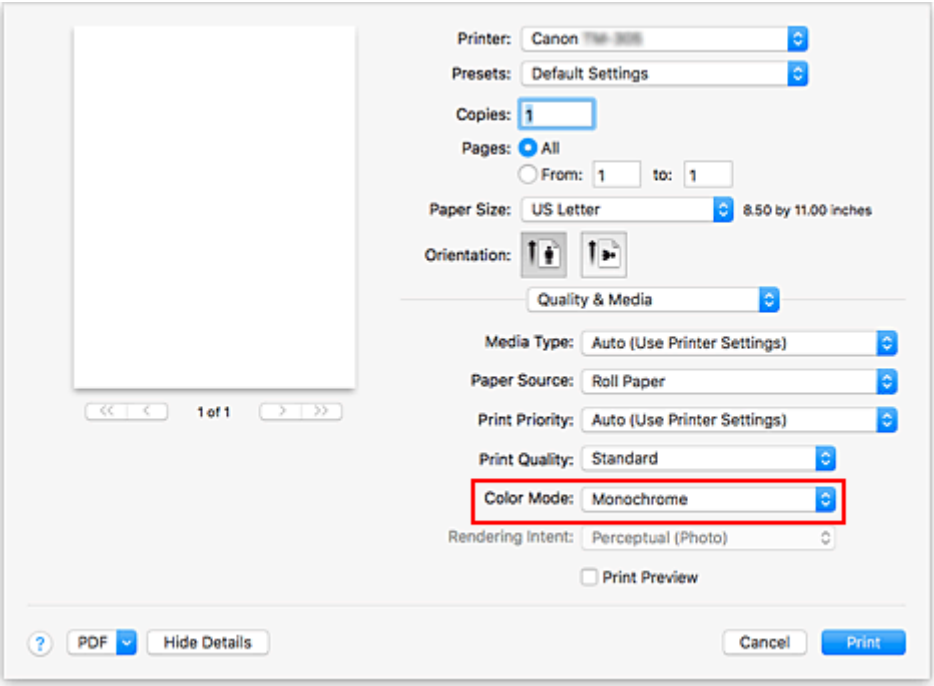

3. Complete the setup

   Click **Print**.
   When you execute print, the document is converted to grayscale data. It allows you to print the color document in monochrome.

Note

- With monochrome printing, inks other than black ink may be used as well.

Important

- Depending on the settings in **Media Type** and **Print Priority**, **Monochrome Bitmap** appears grayed out and is unavailable.

Specifying Color Correction

You can specify the color correction method suited to the type of document to be printed.
Normally, when data is printed, the printer driver automatically adjusts the colors.

When you want to print by using the color space of the image data effectively or by specifying a printing ICC profile from your application software, select **ColorSync**. When you want to print by having the printer driver correct the colors, select **Canon Color Matching**.

The procedure for specifying color correction is as follows:

1. Select **Color Matching** from the pop-up menu of the Print Dialog

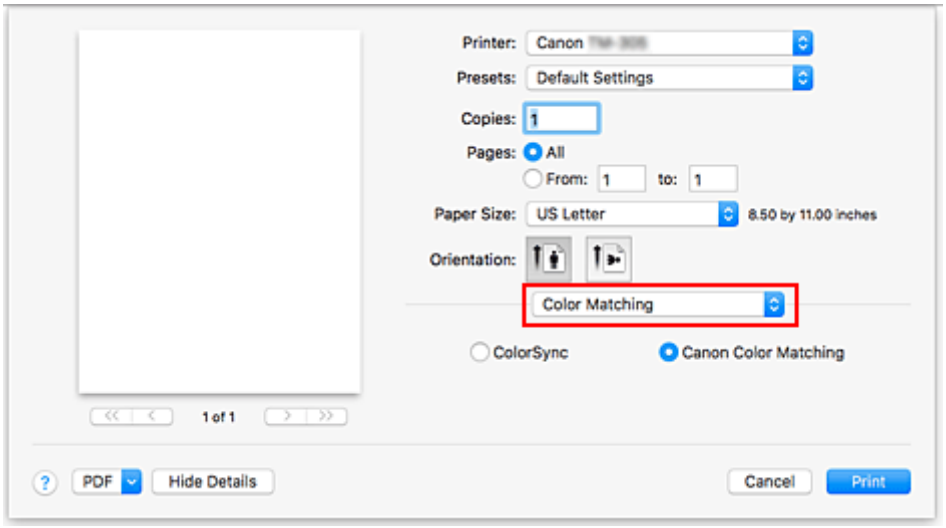

2. Select color correction

   Select the item below that matches your purpose.

   ColorSync

   Perform color correction using ColorSync.

   Canon Color Matching

   The driver will perform necessary adjustments during printing.
   For information about driver matching, see "Adjusting Colors with the Printer Driver."

3. Complete the setup

   Click **Print**.
   When you execute print, the document data is printed with the specified color correction.

Important

- Depending on the application software, when a printing ICC profile is specified from that application software, **Canon Color Matching** cannot be selected because **ColorSync** is selected automatically.
- The **Quality & Media** setting is necessary even when **ColorSync** or **Canon Color Matching** is selected.

Related Topics

- Optimal Photo Printing of Image Data
- Adjusting Colors with the Printer Driver
- Printing with ICC Profiles (Specifying an ICC Profile from the Application Software)
- Printing with ICC Profiles (Specifying an ICC Profile from the Printer Driver)

Optimal Photo Printing of Image Data

When people print images taken with digital cameras, they sometimes feel that the printed color tones differ from those of actual image or those displayed on the monitor.
To get the print results as close as possible to the desired color tones, you must select a printing method that is best suited to the application software used or to your purpose.

Color Management

Devices such as digital cameras, scanners, monitors, and printers handle color differently. Color management (color matching) is a method that manages device-dependent "colors" as a common color space.

For macOS, a color management system called "ColorSync" is built into the operating system.
sRGB is one of the common color spaces that is frequently used.

ICC profiles convert device-dependent "colors" into a common color space. By using an ICC profile and carrying out color management, you can draw out the color space of the image data within the color reproduction area that the printer can express.

Note

- Normally, image files are saved in JPEG format. Some digital cameras allow you to save images in a format called RAW. RAW data refers to an image saving format that requires a computer to develop the image. You can embed an input ICC profile tag into a RAW file by using special application software.

Selecting a Printing Method Suited to the Image Data

The recommended printing method depends on the color space of the image data or the application software to be used.

There are two typical printing methods.
Check the color space of the image data and the application software to be used, and then select the printing method suited to your purpose.

Adjusting Colors with the Printer Driver

Describes the procedure for printing by using the color correction function of the printer driver.
Select this function when you want to print impressions that are close to those displayed on the monitor, for example, if you corrected the colors while checking the print image on the monitor.

Printing with ICC Profiles (Specifying an ICC Profile from the Application Software)

Describes the procedure for printing by using the color space of the image data effectively.
You can print with a common color space by setting up the application software and the printer driver so that the color management matches the input ICC profile of the image data.
The method for setting up the printer driver differs depending on the application software to be used.

Adjusting Colors with the Printer Driver

To use driver matching when printing, turn on the printer driver's color correction function. Driver matching accurately applies the characteristics of data displayed on the monitor and allows you to obtain print results of impressions that are close to those displayed on the monitor.

Important

- When printing using driver matching, Canon recommends that you set the monitor and the environment light as follows:
  - Monitor
    Color temperature: D50 (5000K)
    Brightness: 100 to 120cd/m2
    Gamma: 2.2
  - Environment light
    Fluorescent light for D50 color evaluation (color temperature 5000K, high color rendering properties)
    Brightness when looking at printed materials: 500 lx ± 125 lx

Note

- When printing from an application software that allows you to identify and specify ICC profiles, use an ICC profile for printing with that application software and select setting items that manage colors.

The procedure for adjusting colors with the printer driver is as follows:

1. Select **Color Matching** from the pop-up menu of the Print Dialog

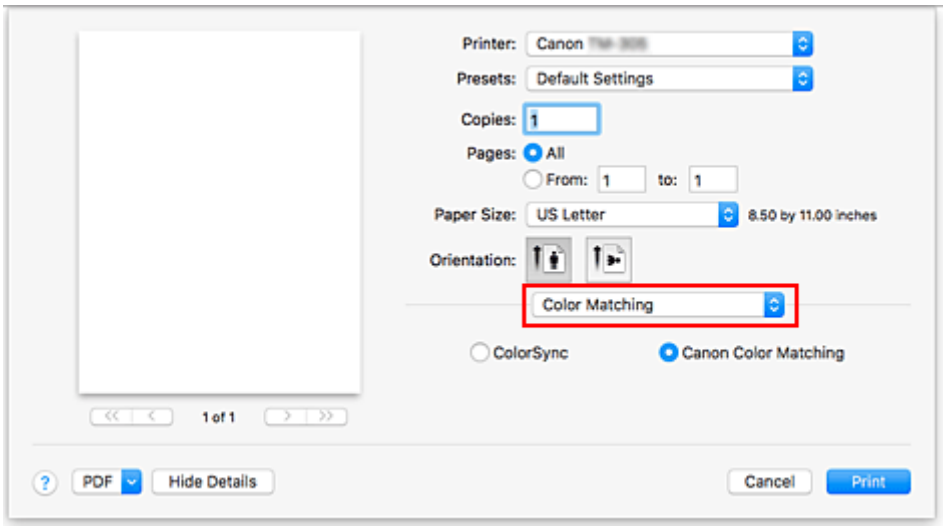

2. Select color correction

   Select **Canon Color Matching**.

3. Select **Quality & Media** from the pop-up menu

4. Select the rendering intent

Select the coloring adjustment method in **Rendering Intent**.

Perceptual (Photo)

Reproduces colors of general photos naturally and features smooth gradation. In addition, selecting this setting allows you to adjust colors easily using an application software.

Saturation (Poster/CAD)

Reproduces vivid colors on data such as a poster. In addition, prints in easy-to-see colors suitable for line drawing.

No Color Correction

Performs printing without color matching.

5. Set the other items

From the pop-up menu, select **Color Options**. If necessary, adjust the color balance (**Cyan**, **Magenta**, **Yellow**) and adjust **Brightness**, and **Contrast** settings.

6. Complete the setup

Click **Print**.
When you execute print, the printer driver adjusts the colors when printing the data.

Related Topics

- Setting the Print Quality Level (Custom)
- Specifying Color Correction
- Adjusting Color Balance
- Adjusting Brightness
- Adjusting Contrast

Printing with ICC Profiles (Specifying an ICC Profile from the Application Software)

When you print from Adobe Photoshop, Canon Digital Photo Professional, or any application software that can identify input ICC profiles and allows you to specify such profiles, printer uses the color management system (ColorSync) built-into macOS when printing. The printer prints the editing and touch-up results of the application software and effectively uses the color space of the input ICC profile specified in the image data.

To use this printing method, use your application software to select color management items and specify an input ICC profile and a printing ICC profile in the image data.
Even if you print using a printing ICC profile that you created yourself, be sure to select color management items from your application software.
For instructions, refer to the manual of the application software you are using.

1. Select **Color Matching** from the pop-up menu of the Print Dialog

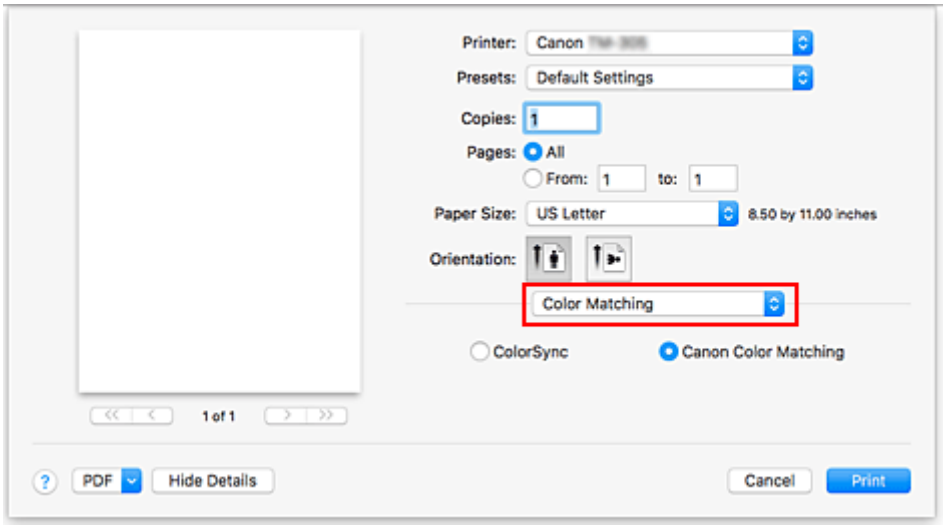

2. Select color correction

   Select **ColorSync**.
   You can leave **Profile** set to **Automatic**.

   Important

   - Depending on the application software you use, you may not be able to select setting items other than **ColorSync**.
   - If you choose a **Profile** setting other than **Automatic** or "Printing Paper ICC Profile", the printer will not be able to print with the correct colors.

3. Complete the setup

   Click **Print**.
   When you execute print, the printer uses the color space of the image data.

Related Topics

- Setting the Print Quality Level (Custom)
- Specifying Color Correction
- Adjusting Color Balance
- Adjusting Brightness
- Adjusting Contrast

Printing with ICC Profiles (Specifying an ICC Profile from the Printer Driver)

Print from an application software that cannot identify or specify input ICC profiles by using the color space of the input ICC profile (sRGB) found in the data.

1. Select **Color Matching** from the pop-up menu of the Print Dialog

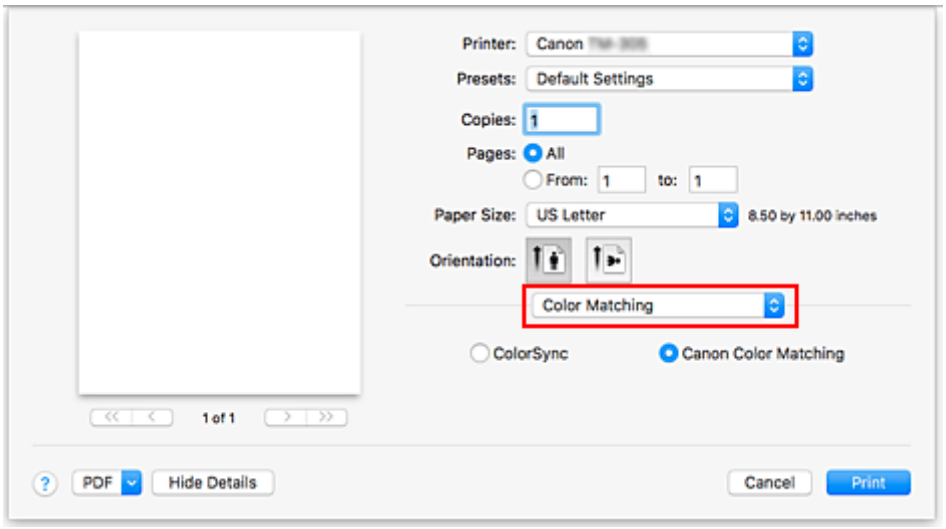

2. Select color correction

   Select **ColorSync**.
   You can leave **Profile** set to **Automatic**.

   Important

   - If you choose a **Profile** setting other than **Automatic** or "Printing Paper ICC Profile", the printer will not be able to print with the correct colors.

3. Complete the setup

   Click **Print**.
   When you execute print, the printer uses the color space of the image data.

Important

- You cannot specify an input ICC profile from the printer driver.

Related Topics

- Setting the Print Quality Level (Custom)
- Specifying Color Correction
- Adjusting Color Balance
- Adjusting Brightness
- Adjusting Contrast

Adjusting Brightness

You can brighten or darken the colors of the overall image data during printing.
The following sample shows the case when light colors are darkened when the image data is printed.

No adjustment

Darken light colors

The procedure for adjusting brightness is as follows:

1. Select **Color Options** from the pop-up menu of the Print Dialog

2. Adjust brightness

   Moving the **Brightness** slider to the right brightens the colors, and moving the slider to the left darkens the colors.
   You can also directly enter a value linked to the slider. Enter a value in the range from -50 to 50. The current settings are displayed in the settings preview on the left side of the printer driver.

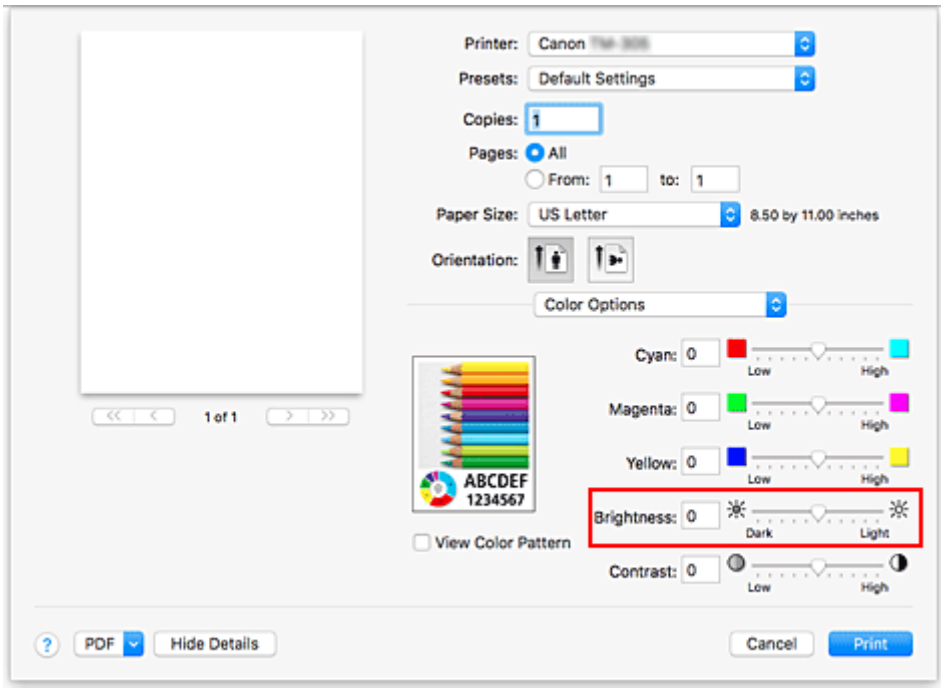

3. Complete the setup

   Click **Print**.
   When you execute print, the data is printed at the adjusted brightness.

Important

- In the following cases, **Brightness** appears grayed out and is unavailable.
  - If **ColorSync** is selected for **Color Matching**.
  - If **Monochrome Bitmap** is selected for **Color Mode** in **Quality & Media**.

Related Topics

- Setting the Print Quality Level (Custom)
- Specifying Color Correction
- Adjusting Color Balance
- Adjusting Contrast

Adjusting Contrast

You can adjust the image contrast during printing.
To make the differences between the light and dark portions of images greater and more distinct, increase the contrast. On the other hand, to make the differences between the light and dark portions of images smaller and less distinct, reduce the contrast.

No adjustment

Adjust the contrast

The procedure for adjusting contrast is as follows:

1. Select **Color Options** from the pop-up menu of the Print Dialog

2. Adjust the contrast

   Moving the **Contrast** slider to the right increases the contrast, and moving the slider to the left decreases the contrast.
   You can also directly enter a value linked to the slider. Enter a value in the range from -50 to 50. The current settings are displayed in the settings preview on the left side of the printer driver.

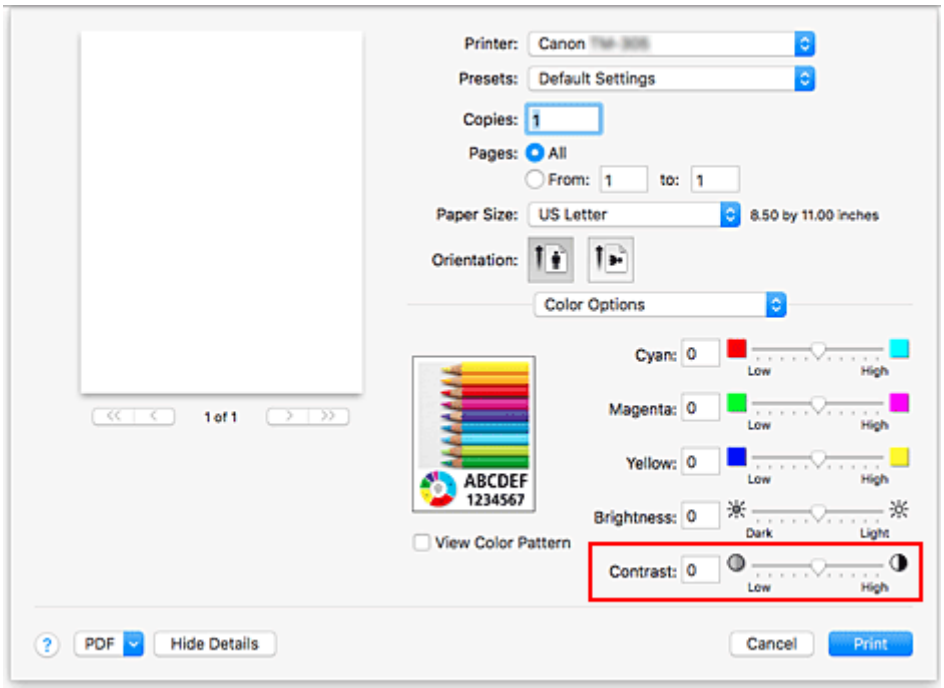

3. Complete the setup

   Click **Print**.
   When you execute print, the image is printed with the adjusted contrast.

Important

- In the following cases, **Contrast** appears grayed out and is unavailable.
  - If **ColorSync** is selected for **Color Matching**.
  - If **Monochrome Bitmap** is selected for **Color Mode** in **Quality & Media**.

Related Topics

- Setting the Print Quality Level (Custom)
- Specifying Color Correction
- Adjusting Color Balance
- Adjusting Brightness

Scaled Printing

The procedure for printing a document with pages enlarged or reduced is as follows:

Printing by Enlarging/Reducing Document to Specified Ratio

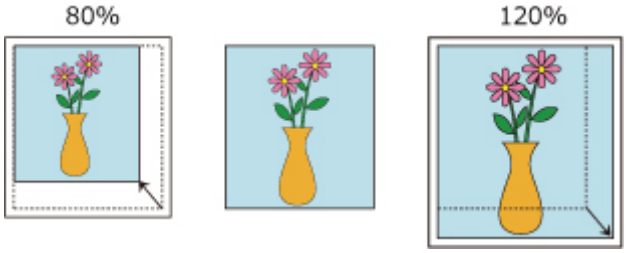

1. Select the printer

   In the Page Setup Dialog, select your model name from the **Format For** list.

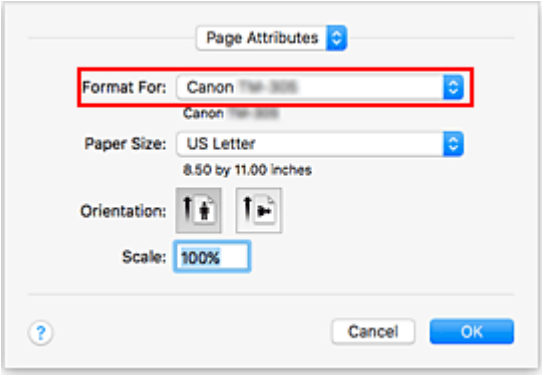

2. Set scaled printing

   Specify the scaling factor in the **Scale** box, and click **OK**.

   Note

   - Depending on the **Scale** value that you set, an error message may be displayed.

3. Complete the setup

   On the Print Dialog, click **Print**.
   When you execute print, the document will be printed with the specified scale.

Important

- When the application software which you used to create the original has the scaled printing function, configure the settings on your application software. You do not need to configure the same setting in the Page Setup dialog.

Printing by Enlarging/Reducing Document to Match Roll Paper Width

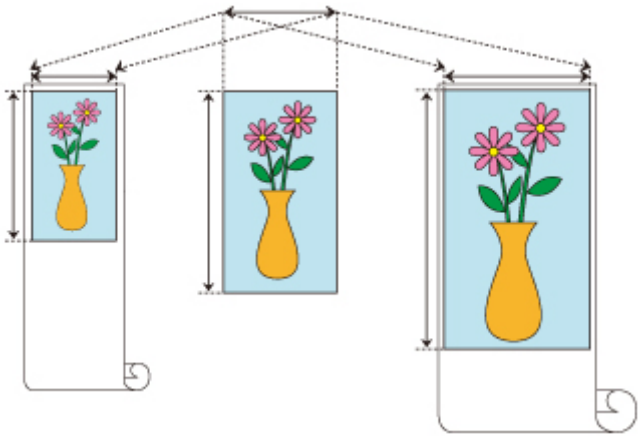

1. Select **Page Processing** from the pop-up menu of the Print Dialog

2. Setting Enlarged/Reduced Printing

   For **Fit Roll Paper Width**, select **On (Bordered)** or **On (Borderless)**.

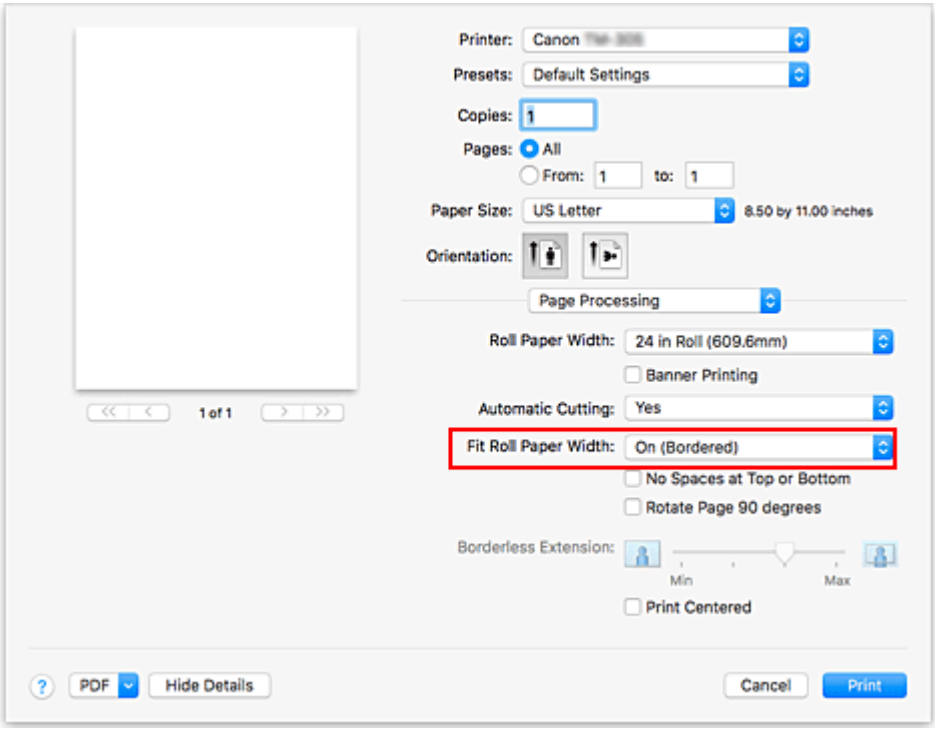

Note

- Depending on the **Paper Size** settings, the settings you can choose will differ.
- When selecting "XXX oversize" from **Paper Size**, **On (Borderless)** cannot be selected.

3. Complete the setup

   Click **Print**.
   When you print, the document is expanded or reduced to match the roll paper width and then printed.

Printing to Oversized Paper Sizes

When printing a created document so that it fills the entire paper width, select a paper size from the "XXX oversize" (sizes resulting from adding margins necessary for printer operation to the document sizes) so that all areas of the document are printed at their actual size.

A printout that has the same area as the document can be obtained by trimming the outer margins after printing.

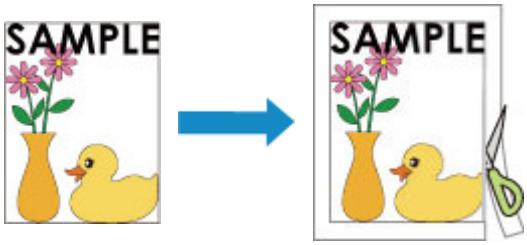

The procedure for printing with oversize is as follows:

1. Select oversized paper size

   In the Print dialog, select "XXX oversize" for **Paper Size**.

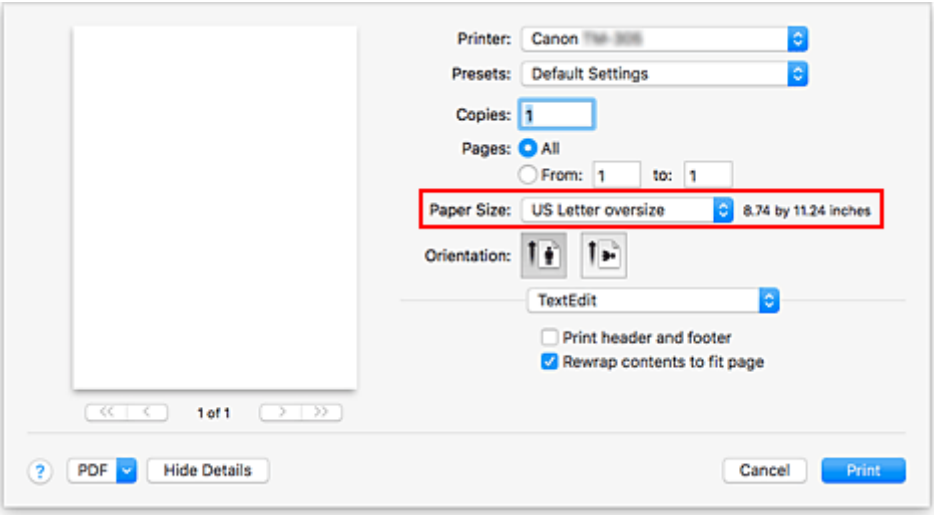

2. Select the paper source

   Select **Roll Paper** for **Paper Source**.

   Important

   - The paper feed method will differ according to the paper settings.

3. Select **Page Processing** from the pop-up menu

4. Select roll paper width

   Set **Roll Paper Width** to the width of the roll paper loaded in the printer.

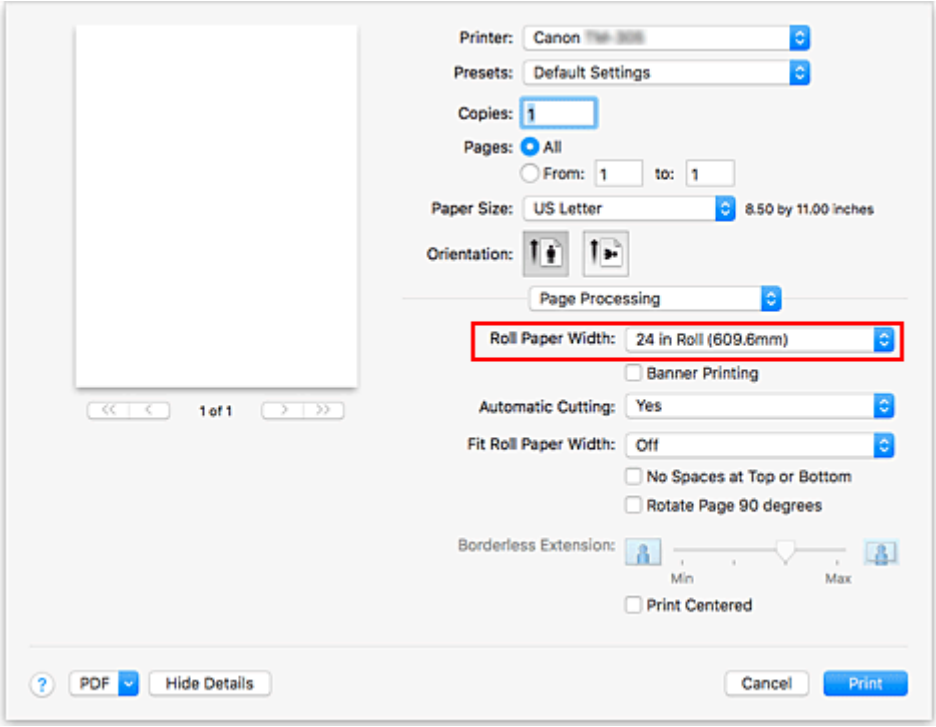

5. Complete the setup

Click **Print**.
When you print, the document is printed so that it fills the paper width.

Important

- When printing to oversized paper sizes, use paper that has the following necessary margins added to the document size.
  - Cut sheet: 6 mm or more added to width and 23 mm or more added to height of document size
  - Roll paper: 6 mm or more added to width and 6 mm or more added to height of document size

Note

- An oversized paper size cannot be used for the largest paper size that can be loaded in the printer.

Setting Paper Dimensions (Custom Size)

You can specify the height and width of paper when its size cannot be selected from the **Paper Size** menu. Such a paper size is called "custom size."

The procedure for specifying a custom size is as follows:

1. Creating a new custom paper size

   In the Print Dialog, select **Manage Custom Sizes...** from **Paper Size**.
   In the displayed dialog, click **+**.

   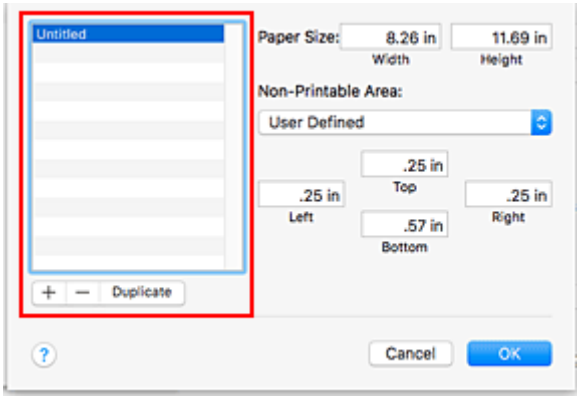

   Untitled will be added to the list.

2. Setting details about the custom paper size

   Double-click **Untitled**, enter the name of the paper size you want to register, and specify the **Width** and **Height** of the paper for **Paper Size**.
   Select **User Defined** or your model for **Non-Printable Area**, and enter the margins.

3. Registering the custom paper size

   Click **OK**.
   The custom size is registered.

Important

- If the application software that created the document has a function for specifying height and width values, use the application software to set the values. If the application software does not have such a function or if the document does not print correctly, perform the above procedure from the printer driver to set the values.

Note

- To duplicate the registered paper size, select the paper size that you want to duplicate from the **Custom Paper Sizes** list, and click **Duplicate**.
- To delete a registered paper size, select the paper size that you want to delete from the **Custom Paper Sizes** list, and click **-**.

- If the paper settings in the printer driver differ from the paper information registered on the printer, an error message may appear on the printer's operation panel. You can still print but you may not be able to obtain correct print results.

Print Area

A margin required by the printer is added with respect to the size of paper loaded in the printer. Except in borderless printing, the actual printing area corresponds to the paper size minus the space for this margin.

Note

- Printable Area: The area that can be printed.
- For borderless printing with roll paper, the margin is 0 in (0 mm).
  However, depending on the paper size, minor margins may be available.
  Prints without Edges Based on the Scenarios
- Recommended Print Area: We recommend printing within this area.
- To match the document size with the actual printing area, print on oversize paper with the required margin added.
  Printing to Oversized Paper Sizes

Sheets

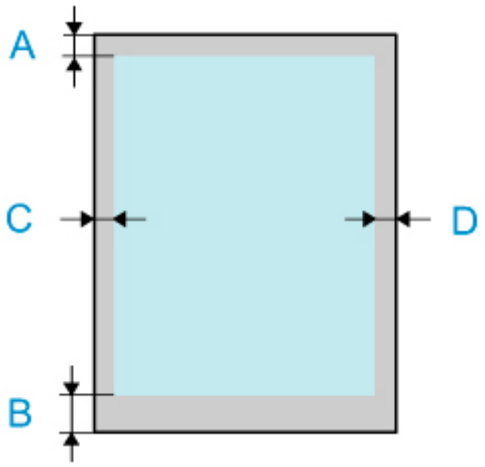

A: Top Edge

B: Bottom Edge

C: Left Edge

D: Right Edge

- Printable Area:
  A margin of 0.2 inch (3 mm) on top, 0.5 inch (12.7 mm) on bottom*, and 0.2 inch (3 mm) on left and right sides is required.
- Recommended Print Area:
  A margin of 0.8 inch (20 mm) on top, 0.8 inch (20 mm) on bottom*, and 0.2 inch (3 mm) on left and right sides is required.

* The bottom margin for cut sheet depends on an OS and applications.

Rolls

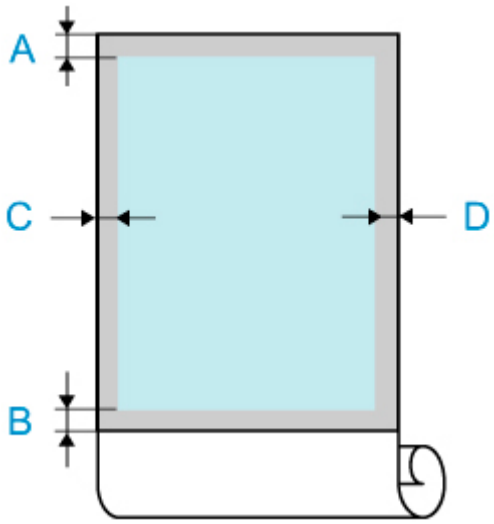

A: Top Edge

B: Bottom Edge

C: Left Edge

D: Right Edge

- Printable Area:
  A margin of 0.2 inch (3 mm) on top and bottom and 0.2 inch (3 mm) on left and right sides is required. For borderless printing, the margins on top, bottom, left, and right are 0 inch (0 mm). For paper that supports borderless printing, see "Paper Information List."
- Recommended Print Area:
  A margin of 0.8 inch (20 mm) on top, 0.2 inch (3 mm) on bottom, and 0.2 inch (3 mm) on left and right sides is required.

Printing without Edges Based on the Scenarios

- Printing without Margins to Match Roll Paper Width
- Printing Full-Size without Margins

Printing without Margins to Match Roll Paper Width

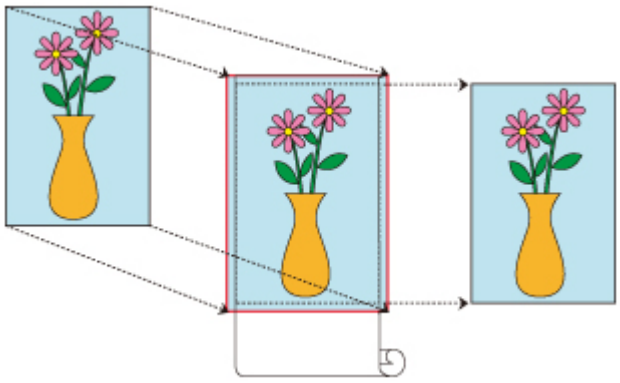

Procedure for printing borderless (without white margins around the edges) by enlarging/reducing documents to match roll paper width.

1. Select the paper size for whole-surface borderless printing

   Select "XXX Borderless" from **Paper Size** in the print dialog.

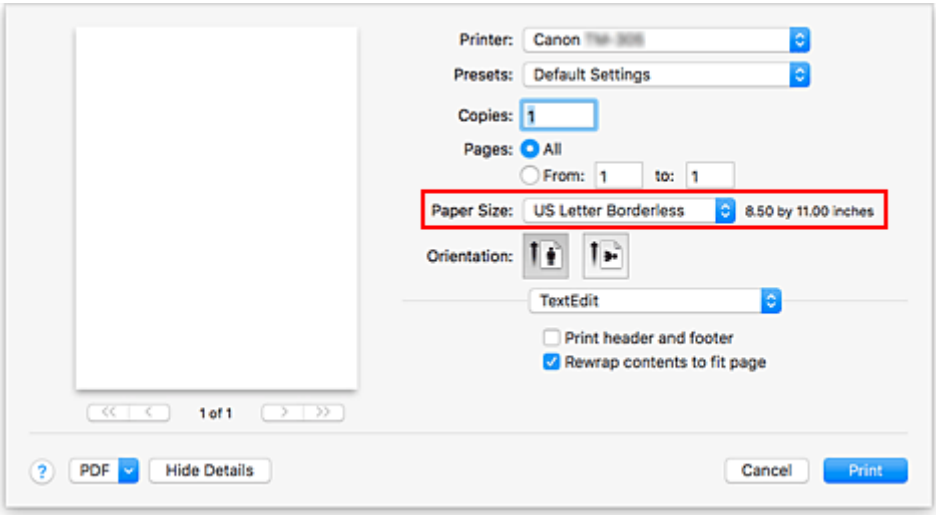

2. From the pop-up menu, select **Page Processing**

3. Select roll paper width

   For paper roll width, enter the same value set in the printer under **Roll Paper Width**.

4. Select a method for printing on roll paper

   In **Fit Roll Paper Width**, select **On (Borderless)**.

5. Determine by how much you want the image to exceed the size of the paper

   Adjust **Borderless Extension** as needed.
   Dragging the slide bar to the right will increase overflow, while dragging it to the left will reduce it.
   The second position from the right is recommended for most cases.

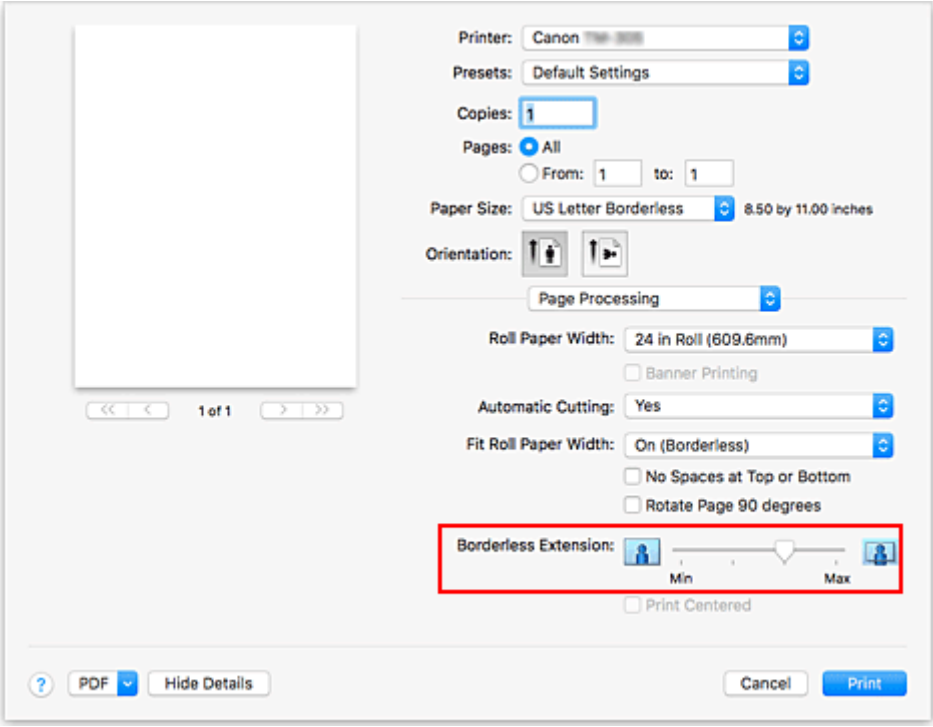

Important

- If the **Borderless Extension** slide bar is set to the far right position, the back of the paper may come out stained.

6. Complete setting process

Click **Print**.

If you print now, the document will be printed by filling in the entire surface of the paper.

Important

- The available paper sizes for Borderless Printing are pre-determined. From **Paper Size**, select the paper displayed as "Borderless."
- If you want to print borderless using a custom paper size, create a custom paper size by choosing **Paper Size**, **Manage Custom Sizes...**, and setting all **Non-Printable Area** values to 0 mm. Next, choose **Page Processing**, **Fit Roll Paper Width** and select **On (Borderless)**.
- If you try to set borderless printing, in **Page Processing**, **Banner Printing** and **Print Centered** will be displayed in gray and you will not be able to configure them.
- Depending on paper size, the length/width ratio of the paper may be different from that of the image, making it impossible for the whole image to fit on the paper.
  When this happens, crop the image with the application software to match paper size.
- When printing borderless, printing may stop abruptly and the paper will be cut causing a slight color unevenness on the edges of the paper. If you require particularly high quality, under **Page Processing**, **Automatic Cutting**, select **None**. When you do so, the document will be printed without the left and right margins. After the printed material has exited the printer and has been cut, cut the upper and lower edges with a pair of scissors.
- When printing borderless on paper with low ink-fixing properties, depending on frequency of use, the cutter unit may come into contact with the paper surface scratching it and causing the paper to be unevenly cut.

You may be able to improve the situation by choosing **Paper Detailed Settings** and set **Dry Time (Between Pages)** to a higher value.

- If the following paper is selected for **Roll Paper Width**, margins may be formed on the left and right of the document even when borderless printing is set.
  - **800mm Roll (800.0mm)**
  - **30 in Roll (762.0mm)**
  - **600mm Roll (600.0mm)**
  - **20 in Roll (508.0mm)**
  - **500mm Roll (500.0mm)**
  - **A2/A3 Roll (420.0mm)**
  - **16 in Roll (406.4mm)**
  - **A3+ Roll (329.0mm)**
  - **12 in Roll (304.8mm)**
  - **300mm Roll (300.0mm)**
  - **A3/A4 Roll (297.0mm)**
  - **B4 Roll (257.0mm)**
  - **8 in Roll (203.2mm)**

  Also, stains may appear on the back of the paper.

Note

- When using applications like Microsoft Word which allow you to set margins, set margins to 0 mm.

Printing Full-Size without Margins

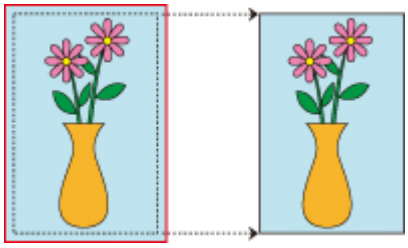

Procedure for printing borderless (without white margins around the edges) images in the same size as the original document without enlarging/reducing them Recommended if you prize quality.

1. Select the paper size for whole-surface borderless printing

   Select "XXX Borderless" from **Paper Size** in the print dialog.

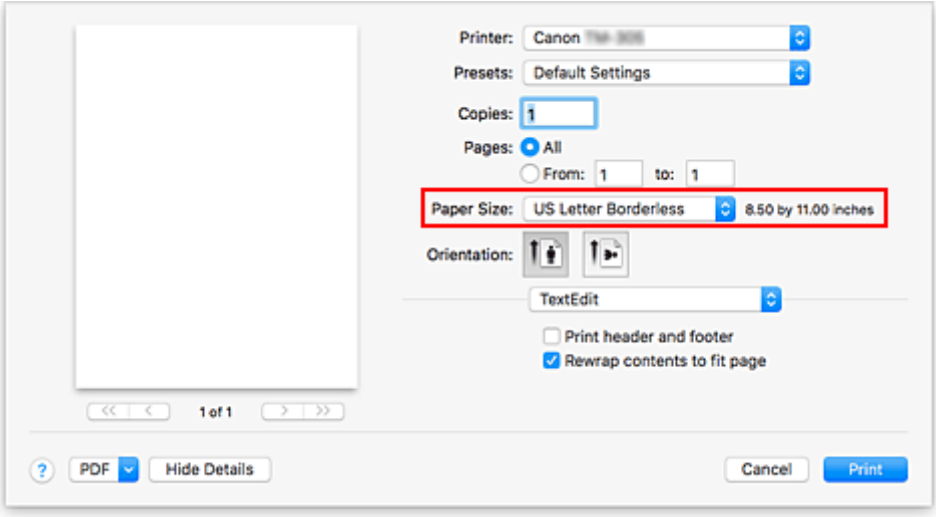

2. From the pop-up menu, select **Page Processing**

3. Select roll paper width

   For paper roll width, enter the same value set in the printer under **Roll Paper Width**.

4. Select a method for printing on roll paper

   For **Fit Roll Paper Width**, select **Off**.

   Important

   - Depending on **Paper Size**, when setting **Fit Roll Paper Width** on **Off**, it may not be possible to print borderless.

5. Determine by how much you want the image to exceed the size of the paper

   Adjust **Borderless Extension** as needed.
   Dragging the slide bar to the right will increase overflow, while dragging it to the left will reduce it.
   The second position from the right is recommended for most cases.

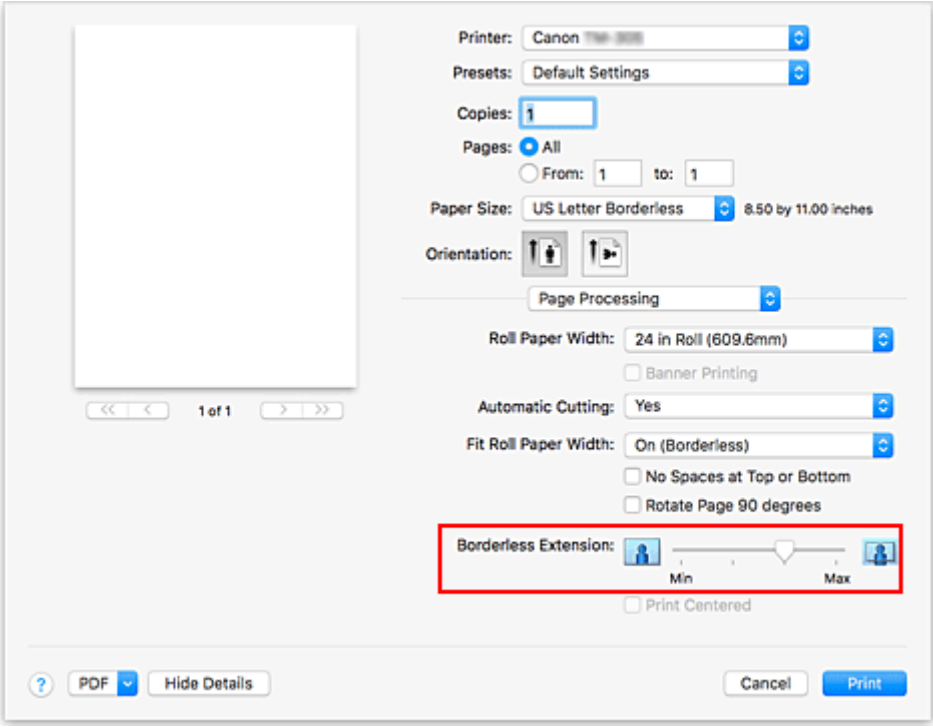

Important

- If the **Borderless Extension** slide bar is set to the far right position, the back of the paper may come out stained.

6. Complete setting process

Click **Print**.

If you print now, the document will be printed by filling in the entire surface of the paper.

Important

- The available paper sizes for Borderless Printing are pre-determined. From **Paper Size**, select the paper displayed as "Borderless."
- If you try to set borderless printing, in **Page Processing**, **Banner Printing** and **Print Centered** will be displayed in gray and you will not be able to configure them.
- Depending on paper size, the length/width ratio of the paper may be different from that of the image, making it impossible for the whole image to fit on the paper.
  When this happens, crop the image with the application software to match paper size.
- When printing borderless, printing may stop abruptly and the paper will be cut causing a slight color unevenness on the edges of the paper. If you require particularly high quality, under **Page Processing**, **Automatic Cutting**, select **None**. When you do so, the document will be printed without the left and right margins. After the printed material has exited the printer and has been cut, cut the upper and lower edges with a pair of scissors.
- When printing borderless on paper with low ink-fixing properties, depending on frequency of use, the cutter unit may come into contact with the paper surface scratching it and causing the paper to be unevenly cut.
  You may be able to improve the situation by choosing **Paper Detailed Settings** and set **Dry Time (Between Pages)** to a higher value.

- If the following paper is selected for **Roll Paper Width**, margins may be formed on the left and right of the document even when borderless printing is set.
  - **800mm Roll (800.0mm)**
  - **30 in Roll (762.0mm)**
  - **600mm Roll (600.0mm)**
  - **20 in Roll (508.0mm)**
  - **500mm Roll (500.0mm)**
  - **A2/A3 Roll (420.0mm)**
  - **16 in Roll (406.4mm)**
  - **A3+ Roll (329.0mm)**
  - **12 in Roll (304.8mm)**
  - **300mm Roll (300.0mm)**
  - **A3/A4 Roll (297.0mm)**
  - **B4 Roll (257.0mm)**
  - **8 in Roll (203.2mm)**

  Also, stains may appear on the back of the paper.

Note

- When using applications like Microsoft Word which allow you to set margins, set margins to 0 mm.

Printing Hanging and Horizontal Banners (Large-Format Printing)

A drapery or banner up to 18.0m can be made by enlarging or reducing original documents made on application software.
However, there are cases in which an 18.0 meter banner cannot be printed because the application software used has limits on the document size that can be set.

The procedure for printing hanging and horizontal banners is as follows:

1. Register custom paper size

   From **Paper Size**, use **Manage Custom Sizes...** to register the paper size that you want to use.

2. Select the paper size

   In the Print dialog, select a registered custom paper size from the **Paper Size** list.

3. Select **Page Processing** from the pop-up menu

4. Select roll paper width

   Set **Roll Paper Width** to the width of the roll paper loaded in the printer.

5. Selecting **On (Bordered)** or **On (Borderless)** for **Fit Roll Paper Width**

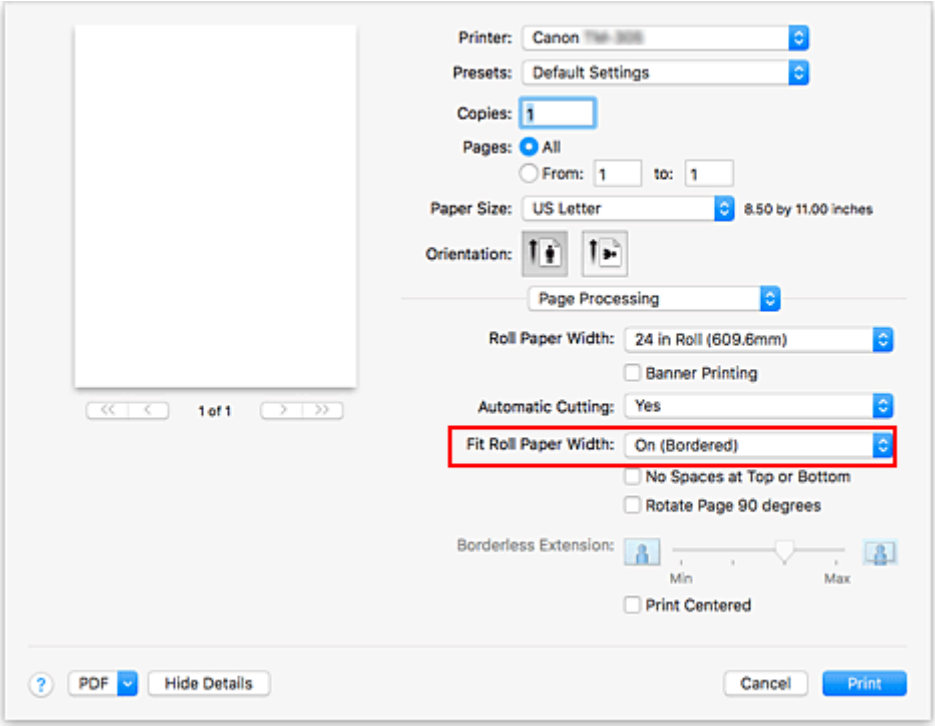

Important

- When using the customer paper size and printing the whole sheet without edges, create a paper size with the **Non-Printable Area** values all set to 0mm in **Manage Custom Sizes...** from **Paper Size**, and select **On (Bordered)** from the **Fit Roll Paper Width** in **Page Processing**.

6. Complete the setup

Click **Print**.
When you print, the hanging or horizontal banner is printed by using the custom paper size.

Printing by Dividing/Joining Documents

- Lining Up and Printing Multiple Documents
- Printing by Connecting Multiple Pages
- Printing Multiple Pages All on One Page

Lining Up and Printing Multiple Documents

You can line up multiple documents that were created separately and print them together on one page.

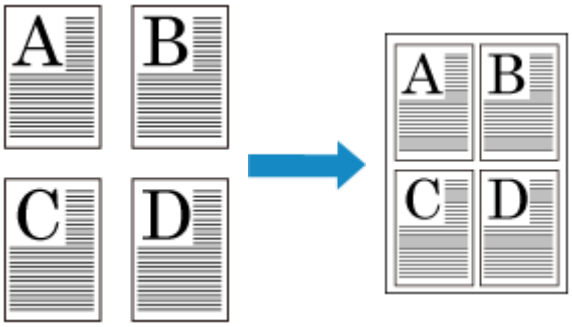

The procedure for lining up and printing multiple documents is as follows:

1. In Print dialog, select Canon imagePROGRAF Free Layout for **PDF**

   Canon imagePROGRAF Free Layout is started.
   Canon imagePROGRAF Free Layout allows you to edit and rearrange images.

2. Execute printing

   From the **File** menu of Canon imagePROGRAF Free Layout, select **Print...** to execute printing.

Printing by Connecting Multiple Pages

You can eliminate the blank spaces between pages in a document that extends over multiple pages and print the document as one continuous document.

The procedure for printing by connecting multiple pages is as follows:

1. Select **Quality & Media** from the pop-up menu of the Print Dialog

2. Select the paper source

   Select **Roll Paper** for **Paper Source**.

   Important

   - The paper feed method will differ according to the paper settings.

3. Select **Page Processing** from the pop-up menu

4. Setting Banner Printing

   Check the **Banner Printing** check box.

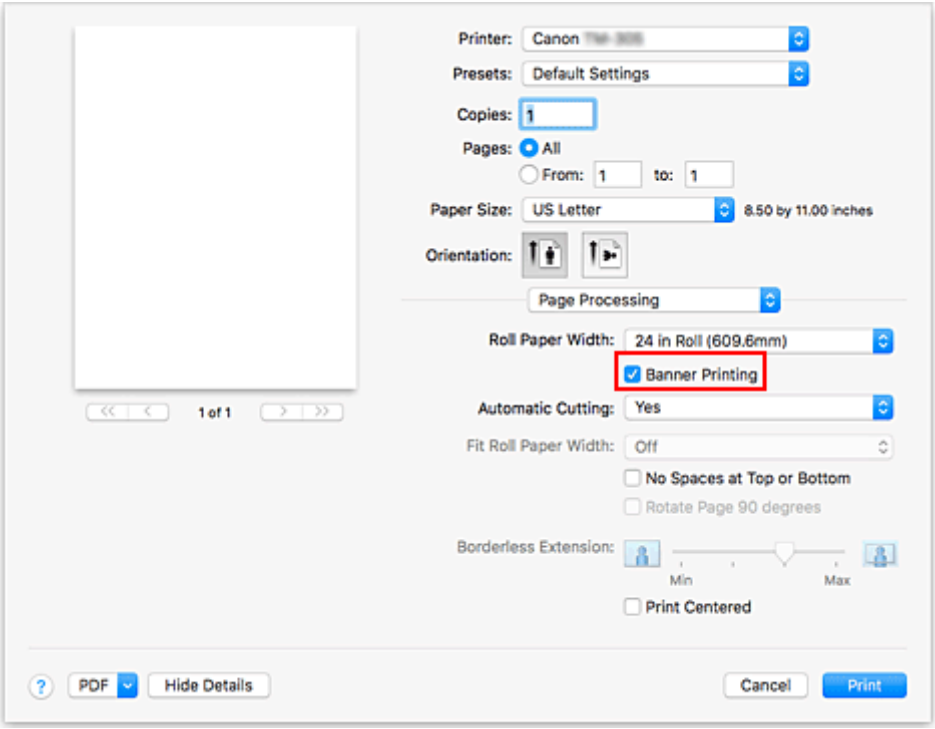

5. Complete the setup

   Click **Print**.
   When you print, the document is printed with the multiple pages connected.

Important

- When "XXX Borderless" or "XXX Cut Sheet" is selected for **Paper Size** in the Print dialog, **Banner Printing** is grayed out and cannot be set.

Printing Multiple Pages All on One Page

The page layout printing function allows you to print more than one page image on a single sheet of paper.

The procedure for performing page layout printing is as follows:

1. Select **Layout** from the pop-up menu in the Print Dialog

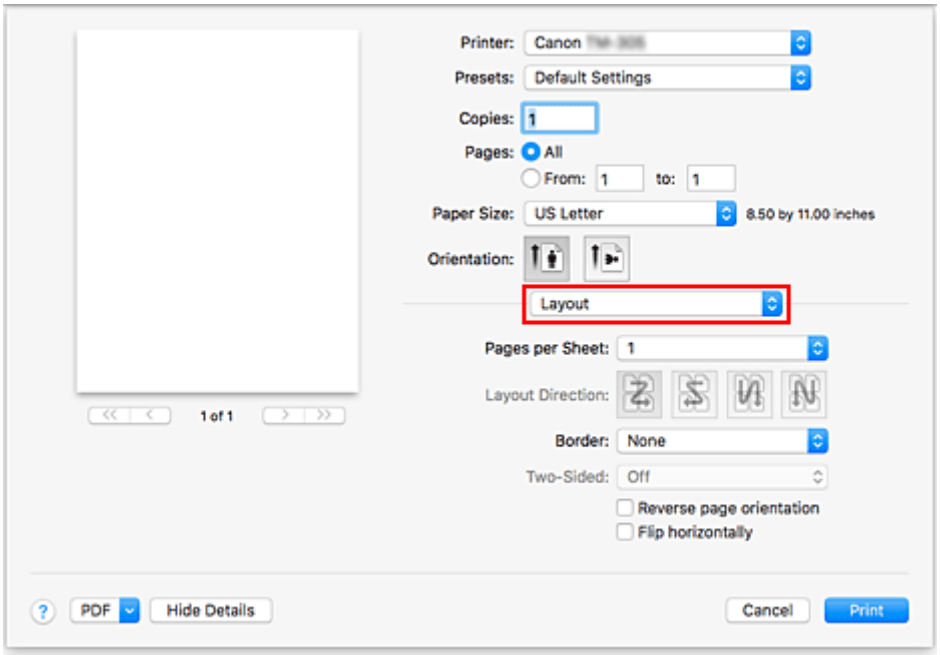

2. Set the number of original you print on one page

   In **Pages per Sheet**, specify the number of page you print on one page.

3. If necessary, set the following items

   Layout Direction

   To change the page placement order, select an icon from the list.

   Border

   To print a page border around each document page, select a type of page border.

   Reverse page orientation

   Select this check box to change the paper orientation.

Flip horizontally

Select this check box to reverse left and right of the document.

4. Complete the setup

Click **Print**.

When you execute print, the specified number of pages will be arranged on each sheet of paper in the specified order.

Printing Document in Center of Paper

When you want to position the source document in the middle of the cut paper and print, or print with even margins on the right and left in relation to the width of the roll paper, use the **Print Centered** function.
The print results when setting with **Print Centered** are as follows. Normally, if **Print Centered** is set when printed as in (A), it will be printed as in (B) for cut paper and (C) for roll paper.

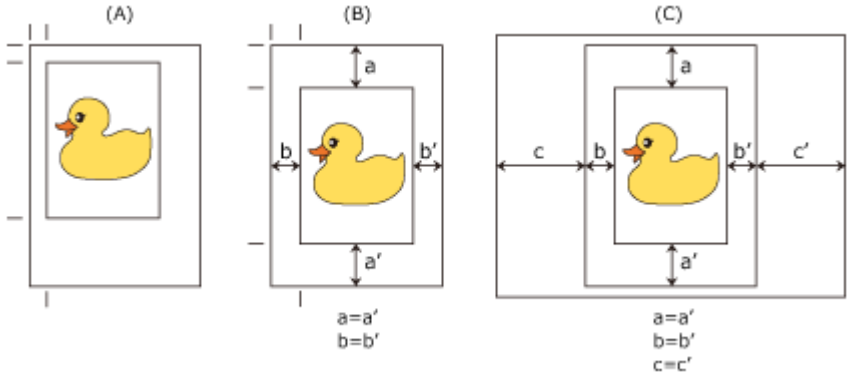

Note

- When setting the magnification using **Scale** in the Page Setup Dialog, a fixed point at the upper left corner of a page is always used as a start point for enlarging or reducing the page. For that reason, when performing reduced printing, the bottom and right margins of the paper will increase. At this time, if you place a checkmark next to **Print Centered**, the top, bottom, left and right margins can all be printed evenly.

The procedure for printing to the center of the paper is as follows:

1. Select the paper size

   From **Paper Size**, select the size of the paper you want to print.

2. Select **Quality & Media** from the pop-up menu

3. Select the media type

   For **Media Type**, select the same paper type loaded in the printer.
   If **Auto (Use Printer Settings)** is selected, the paper configured in printer settings is printed.

4. Select the paper source

   For **Paper Source**, select the setting that matches your purpose.

   ### Important

   - The paper feed method will differ according to the paper settings.

5. Select **Page Processing** from the pop-up menu

6. Selecting Roll Paper Width

If you selected a roll paper for **Paper Source**, set **Roll Paper Width** to the width of the roll paper loaded in the printer.

7. Print document in the center of paper

Check the **Print Centered** check box.

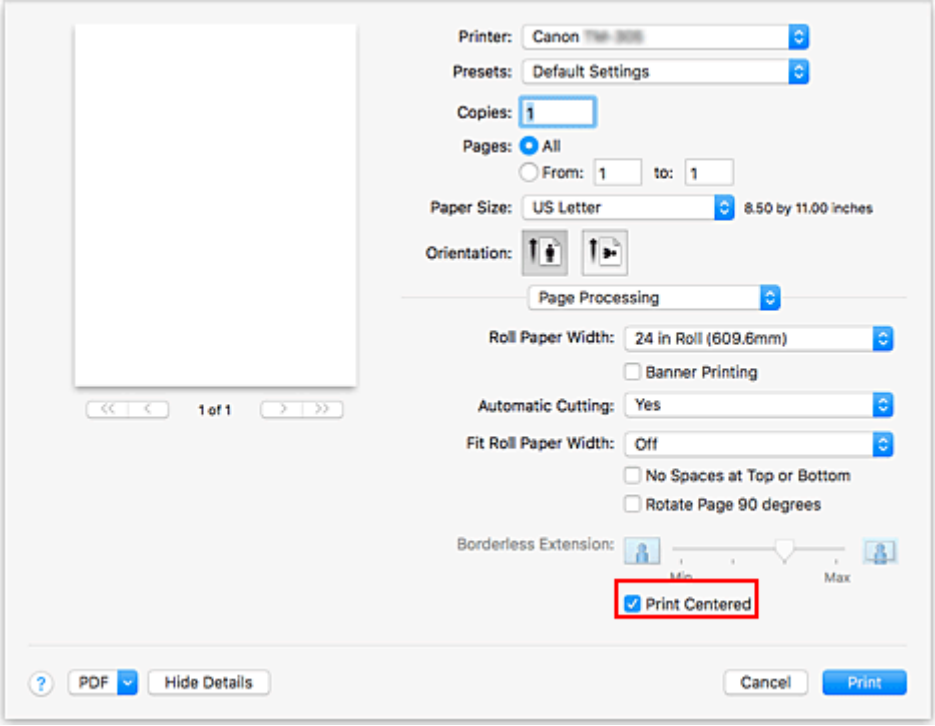

8. Complete the setup

Click **Print**.
When you print, the printer automatically lays out the document to the center of the page and then prints it.

Important

- When you select "XXX Borderless" from **Paper Size** in the print dialog, the **Print Centered** is grayed out and cannot be selected.

Printing by Saving Roll Paper

- Saving Roll Paper by Rotating Document 90 Degrees
- Saving Roll Paper by Eliminating Upper and Lower Margins on Document

Saving Roll Paper by Rotating Document 90 Degrees

When printing a portrait document on roll paper, you can save paper by rotating the document 90 degrees and printing the document so that it is oriented horizontally relative to the paper.

The procedure for saving paper by rotating the document 90 degrees is as follows:

1. Select **Page Processing** from the pop-up menu of the Print Dialog

2. Selecting Paper Saving

   Select the **Rotate Page 90 degrees** check box.

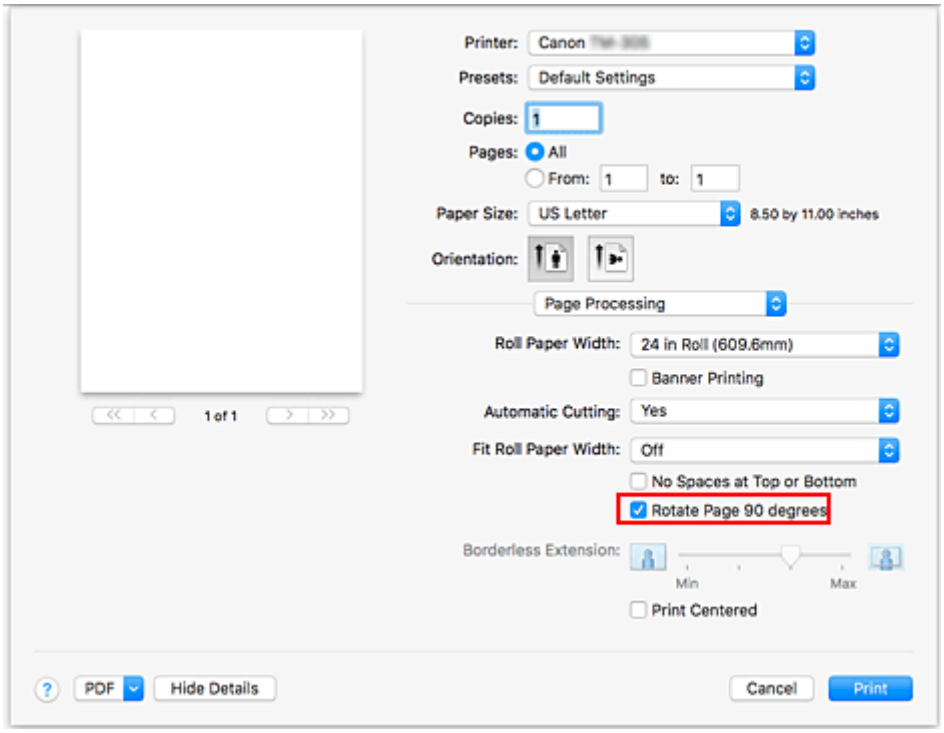

3. Complete the setup

   Click **Print**.
   When you print, you can rotate a portrait document 90 degrees to save paper.

Important

- If the **Banner Printing** check box is selected for **Page Processing**, **Rotate Page 90 degrees** is grayed out and cannot be set.
- When selecting paper in portrait format from **Paper Size** in the print dialog, when this is longer than the width selected in **Roll Paper Width**, **Rotate Page 90 degrees** cannot be used.

Saving Roll Paper by Eliminating Upper and Lower Margins on Document

When printing on roll paper, you can save paper by reducing the upper and lower margins when printing.

The procedure for saving paper by reducing the upper and lower margins is as follows:

1. Select **Quality & Media** from the pop-up menu of the Print Dialog

2. Select the paper source

   Select **Roll Paper** for **Paper Source**.

   Important

   - The paper feed method will differ according to the paper settings.

3. Select **Page Processing** from the pop-up menu

4. Selecting Paper Saving

   Check the **No Spaces at Top or Bottom** check box.

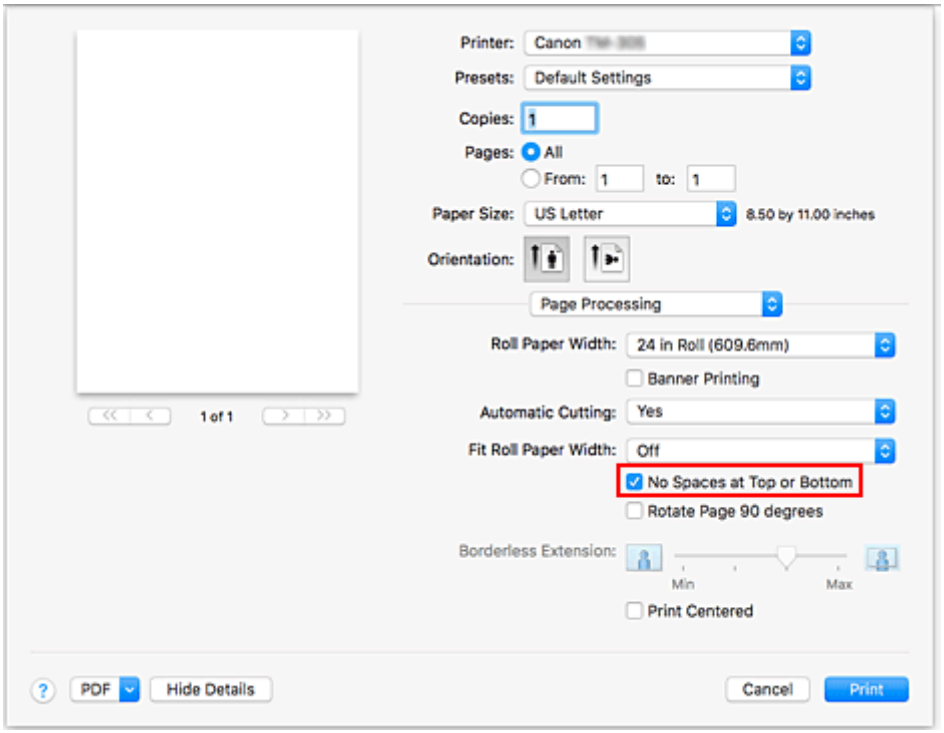

5. Complete the setup

   Click **Print**.
   When you print, the upper and lower margins are reduced so that you can save paper.

Switching the Paper Source to Match the Purpose

This printer has two paper sources: Roll Paper and Cut Sheet.
You can facilitate printing by selecting a paper source setting that matches your media type or purpose.

The procedure for setting paper source is as follows:

1. Select **Quality & Media** from the pop-up menu of the Print Dialog

2. Select the media type

   For **Media Type**, select the same paper type loaded in the printer.
   If **Auto (Use Printer Settings)** is selected, the paper configured in printer settings is printed.

3. Select the paper source

   For **Paper Source**, select the item below that matches your purpose.

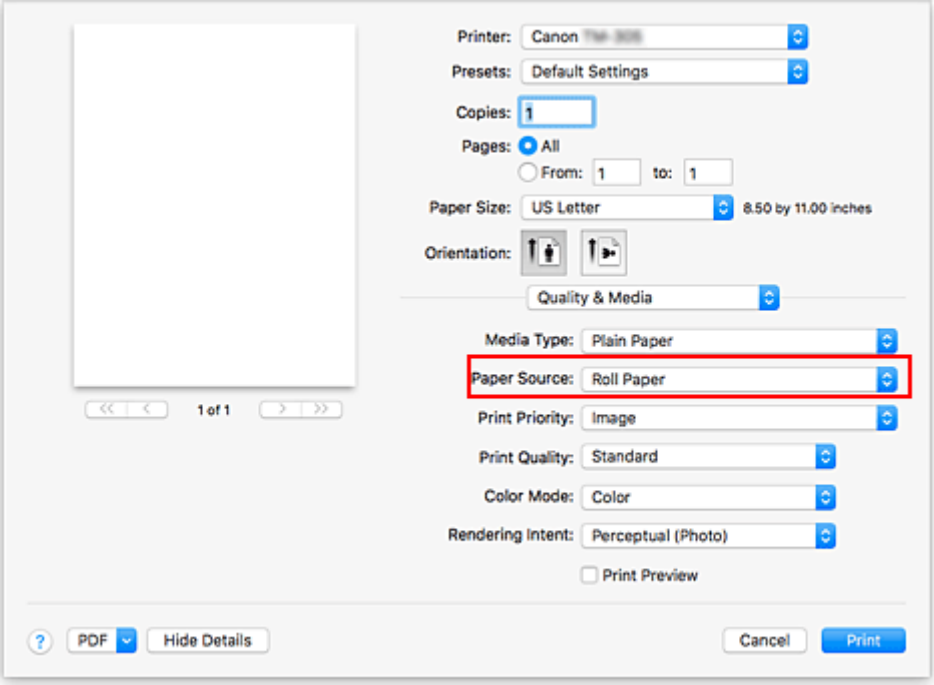

   Roll Paper
   Feeds paper using roll paper.

   Cut Sheet
   Feeds paper that was cut to a specific paper size.

   Important

   - The paper feed method will differ according to the paper settings.

4. Complete the setup

   Click **Print**.
   When you execute print, the printer uses the specified paper source to print the data.

Note

- If the paper settings in the printer driver differ from the paper information registered on the printer, an error message may appear on the printer's operation panel. You can still print but you may not be able to obtain correct print results.

Cutting Roll Paper after Printing

The procedure for cutting roll paper automatically and printing cut guidelines is as follows:

1. Select **Page Processing** from the pop-up menu of the Print Dialog

2. Setting Auto Cut

   From **Automatic Cutting**, select the setting that matches your purpose.

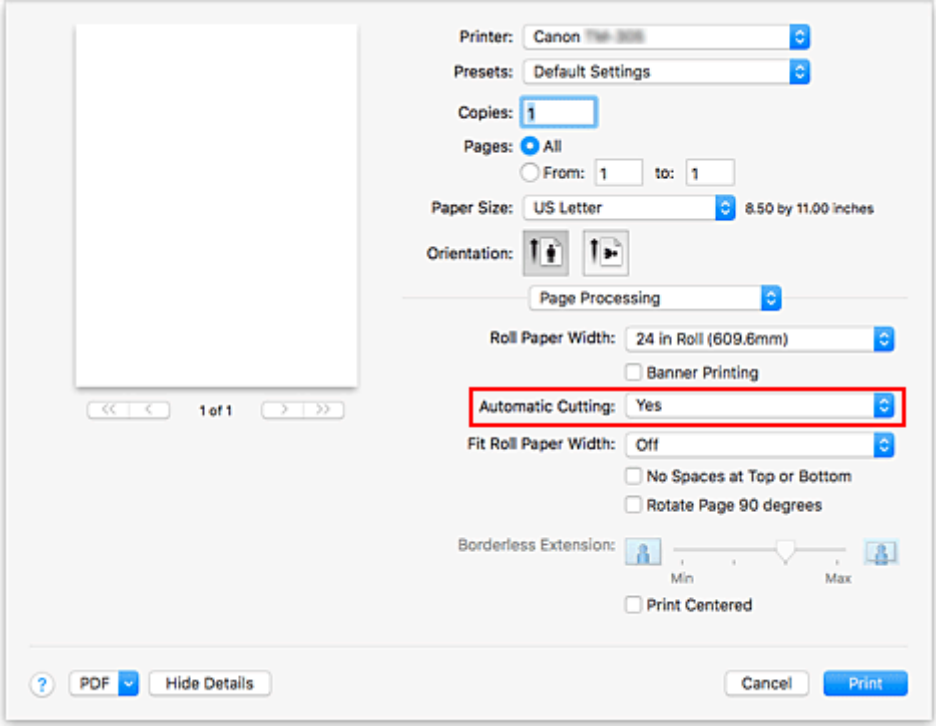

   Yes

   The roll paper is cut automatically after printing.

   None

   The roll paper is not cut after printing.

   Print Cut Guideline

   Cut guidelines are printed for cutting the roll paper manually after printing.

   Note

   - The default setting for automatic cutting is **Yes**.

3. Complete the setup

   Click **Print**.
   When you print, the roll paper is cut automatically after printing or cut guidelines are printed.

Printing Using AirPrint

You can print photographs, E-mails, web pages, and other documents using AirPrint, even if the printer driver is not installed or the application is not downloaded.

Important

- There are restrictions for printing using AirPrint. Please be aware in advance. If you want to use all the functions of the printer, use the Canon IJ printer driver.

Checking Your Environment

First, check your environment.

- AirPrint Operation Environment
  Mac running the latest version of OS
- Requirement
  The Mac and the printer must be connected by one of the following methods:
  - Connected to the same network over a **LAN**
  - Connected directly without wireless router (Direct Connection)
  - Connected by USB

Add The Printer as AirPrint Printer on Your Mac

1. Open **System Preferences** -> **Printers & Scanners**
2. Click **+** next to the printer list
3. Select your printer listed as **Bonjour Multifunction**
4. Select **Secure AirPrint** from **Use**
5. Click **Add**

   The Printer will be added as AirPrint Printer on Your Mac

Print with AirPrint from a Mac

1. Check that printer is turned on
2. Load paper in printer

Set roll paper or cut paper.

3. Start printing from your application software

   The Print dialog opens.

4. Select printer

   Select your model from the **Printer** list in the Print dialog.

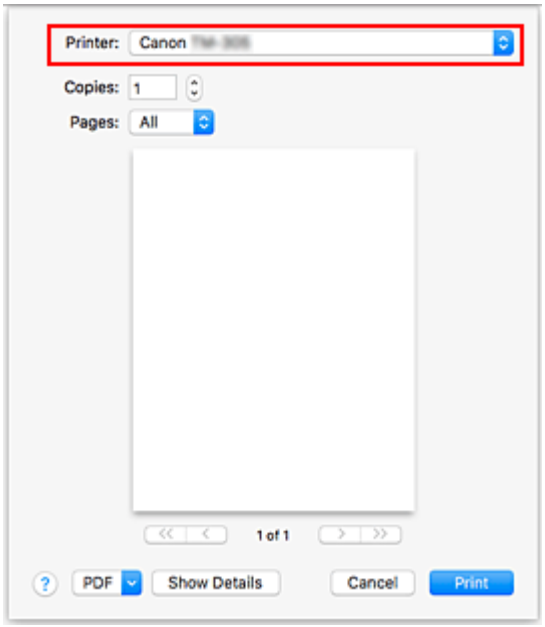

Note

- Click **Show Details** to switch the setup window to the detailed display.

5. Check print settings

   Set paper size and other items as needed.
   Set paper type from the printer.

Note

- Use the Print dialog to set general print settings such as the layout and the print sequence. For information about print settings, refer to macOS help.

6. Click **Print**

   The printer prints according to the specified settings.

Note

- It can take the Wi-Fi a few minutes to get connected after the printer turns on. Print after checking that the printer is connected to the network.
- You cannot use AirPrint if Bonjour settings of printer are disabled. Check **LAN** settings of printer and enable Bonjour settings.
- Refer to "Cannot Print Using AirPrint" for printing problems when using AirPrint.
- The display of the settings screen may differ depending on the application software you are using.

Deleting Print Job

Use **Stop** button from printer to cancel the print job.

Restrictions on the AirPrint

- If **A2+**, **A3+**, or **13 x 22** is selected for **Paper Size** in the print dialog, part of the image may not fit on the paper.
- If printing cut paper, the bottom edge of the image may be cut out.
- The roll sheets with the below width cannot be printed without borders.
  - 800.0 mm (31.50 in)
  - 762.0 mm (30.00 in)
  - 600.0 mm (23.62 in)
  - 508.0 mm (20.00 in)
  - 500.0 mm (19.69 in)
  - 420.0 mm (16.54 in)
  - 406.4 mm (16.00 in)
  - 329.0 mm (12.95 in)
  - 304.8 mm (12.00 in)
  - 300.0 mm (11.81 in)
  - 297.0 mm (11.69 in)
  - 257.0 mm (10.12 in)
  - 203.2 mm (8.00 in)
- If printing cut paper, feed the paper vertically. If the paper is fed horizontally, it will still print vertical images.
- Some paper sizes that are compatible with the Canon IJ printer driver are not compatible with AirPrint. If using these sizes, set a custom size.
- Canon imagePROGRAF Free Layout and Canon imagePROGRAF Preview cannot be used.

Printing from Smartphone/Tablet

For more on printing from a device, refer to the device's or application's instruction manual.

- **Connecting Smartphone/Tablet to Printer Directly (Wireless Direct)**

Connecting Smartphone/Tablet to Printer Directly (Wireless Direct)

You can connect devices (e.g. smartphone, or tablet) to the printer by two methods below.

- Wi-Fi connection (connecting devices using a wireless router)
- Wireless Direct connection (connecting devices without using a wireless router)

This section describes wireless direct, which allows you to print by connecting the devices to the printer directly.

Follow the procedure below to use wireless direct.

1. Change the Printer Setting to Wireless Direct Connection
2. Connect Wi-Fi Direct Compatible Devices such as Smartphones and Tablets to the Printer

This section also describes changing wireless direct connection to Wi-Fi connection.

Change the Printer Setting to Wi-Fi Connection

Important

- Check the usage restrictions and switch the printer to the wireless direct.

  Restrictions

- The administrator password is required to change settings if it is enabled for changing settings using the operation panel.
- If a device has already been connected to the printer directly and you want to add a device to connect, connect it to the printer directly. You can connect up to 5 devices to the printer at the same time.

Change the Printer Setting to Wireless Direct Connection

1. Make sure printer is turned on.

2. On the HOME screen, tap the **Network** icon.

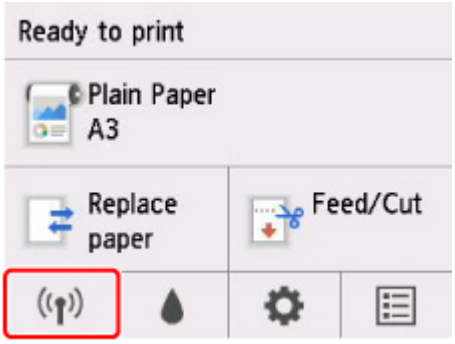

Depending on the current LAN status, the icon displayed on the button may differ.

Menu Operations

3. Tap **Wireless Direct**.

4. Tap **Settings**.

5. Tap **Enable/disable Wireless Direct** and tap **Yes**.

6. Confirm displayed message and tap **OK**.

   After Wireless Direct is enabled, the identifier (SSID) etc. when using the printer with wireless direct connection are displayed.

   By flicking the touch screen, you can check various settings of wireless direct.

   Note

   - The identifier (SSID) and password are specified automatically.
   - By tapping **Show password**, you can check the password. The password is required when connecting a device to the printer. (Depending on the device you are using, no password is required.)
   - By tapping **Settings**, you can change the following settings.
     - **Enable/disable Wireless Direct**
     - **Update SSID/password**
     - **Wireless Direct device name**
     - **Connection request confirmation**

     For updating the SSID / password or changing the name of the printer displayed on Wi-Fi Direct compatible device, see Change Wireless Direct Connection Setting.

Connect Wi-Fi Direct Compatible Devices such as Smartphones and Tablets to the Printer

1. Turn on Wi-Fi communication on Wi-Fi Direct compatible device.

   For more on turning on Wi-Fi communication, see your device's instruction manual.

2. Select "DIRECT-XXXX-TM-300" ("X" represents alphanumeric characters) from list displayed on device.

   Note

   - If "DIRECT-XXXX-TM-300" does not appear on the list, wireless direct is not enabled.

     See Change the Printer Setting to Wireless Direct Connection to enable wireless direct.
   - You can change the name of the printer displayed on Wi-Fi Direct compatible devices.

     See Change Wireless Direct Connection Setting as necessary.

3. Enter password on Wi-Fi Direct compatible device.

   The device is connected to the printer.

Note

- You can check the password set for the printer by the following method.
  1. On the HOME screen, tap (**Network**).
  2. Tap **Wireless Direct**.
  3. Tap **Show password**.
- If your Wi-Fi Direct compatible device is set to prioritize using Wi-Fi Direct and it is connecting to the printer, the printer displays a confirmation screen asking if you allow the device to connect to the printer.

  Make sure the name on the touch screen is the same as that of your Wi-Fi Direct compatible device and tap **Yes**.

Change Wireless Direct Connection Setting

1. Make sure printer is turned on.

2. On the HOME screen, tap (**Network**).

   Menu Operations

3. Tap **Wireless Direct**.

4. Tap **Settings**.

5. Change settings as necessary.

   - To update the identifier (SSID) and the password for wireless direct

     Tap **Update SSID/password** to display the confirmation screen.

     To update the identifier (SSID) and the password, tap **Yes**.

     To check the updated password, tap **Show password**.
   - To change the printer's name displayed on the Wi-Fi Direct compatible device

     Tap **Wireless Direct device name** to display the printer's name (the initial value is "DIRECT-XXXX-TM-300") displayed on a Wi-Fi Direct compatible device.

     Follow the procedure below to change the name.

     1. Tap the device name entry field on the touch screen.
     2. Enter device name (up to 32 characters).
     3. Tap **OK** and confirm the entered device name.
     4. Tap **OK**.

- To change the confirmation screen setting when a Wi-Fi Direct compatible device is connecting to the printer

  Tap **Connection request confirmation** to display the confirmation screen.

  If you want the printer to display the screen to inform you a Wi-Fi Direct compatible device is connecting to the printer, tap **Yes**.

  Important

  - To prevent an unauthorized access, we recommend you should not change the setting from the default.

When you finished performing the settings, the printer returns to the **Wireless Direct settings** screen.

6. Touch **HOME** button.

   The HOME screen appears.

Note

- If you change the wireless direct setting on the printer, also change the setting on the device.

Change the Printer Setting to Wi-Fi Connection

1. Make sure printer is turned on.

2. On the HOME screen, tap (**Network**).

   Menu Operations

3. Tap **Wi-Fi**.

4. Tap **Settings**.

5. Tap **Enable/disable Wi-Fi** and tap **Enable**.

6. Confirm displayed message and tap **OK**.

Printing from iOS Device (AirPrint)

Use AirPrint to print photographs, E-mails, web pages, and other documents without having to download special applications.

Important

- There are restrictions for printing using AirPrint. Please be aware in advance.

Checking Your Environment

First, check your environment.

- AirPrint Operation Environment
  iPhone, iPad, and iPod touch running the latest version of iOS
- Requirement
  The iOS device and the printer must be connected by one of the following methods:
  - Connected to the same network over a **LAN**
  - Connected directly without wireless router (Direct Connection)

Printing with AirPrint from iOS Device

1. Check that printer is turned on

2. Load paper in printer

   Set roll paper or cut paper.

3. Tap operation icon using your iOS device's application

   The following screen appears when printing from iOS 10's Safari. The screen differs depending on the devices or applications.

Menu options appear.

4. Tap **Print**

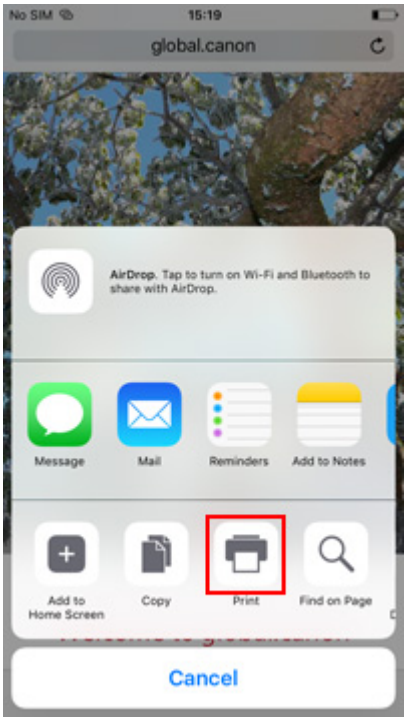

5. Select your model name from **Printer** on **Printer Options**

Important

- Because some applications do not support AirPrint, **Printer Options** may not be displayed. If an application does not let you use printer options, you cannot print from that application.

6. Check Print Settings

   Set the number of copies to be printed and print options, as needed.

7. Tap **Print**

   The printer prints according to the specified settings.

Note

- It can take the Wi-Fi a few minutes to get connected after the printer turns on. Print after checking that the printer is connected to the network.
- You cannot use AirPrint if Bonjour settings of printer are disabled. Check **LAN** settings of printer and enable Bonjour settings.
- Refer to "Cannot Print Using AirPrint" for printing problems when using AirPrint.

Paper Size

With AirPrint, the paper size is selected automatically according to the application being used on the iOS device and the region in which AirPrint is used.

Important

- Depending on the device or OS, the initial settings of paper size may differ.
  Test printing is recommended.
- Depending on the application you are using, the available paper size may differ.

Checking Print Status

You can check the print status of AirPrint from **Print Center**.
Click the **Home** button in the iOS device twice to switch to multitask mode, swipe towards the right to display **Print Center**, then tap on it.

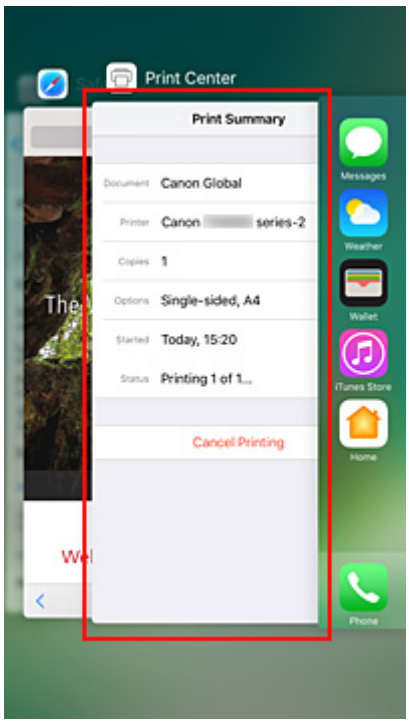

Deleting Print Job

Click the **Home** button in the iOS device twice to switch to multitask mode, swipe towards the right to display **Print Center**, then tap on it. In the screen that appears, tap on the print job to be deleted, and then tap **Cancel Printing**.

Restrictions on the AirPrint

- If **A2+**, **A3+**, or **13 x 22** is selected for **Paper Size** in the print dialog, part of the image may not fit on the paper.
- If printing cut paper, the bottom edge of the image may be cut out.
- The roll sheets with the below width cannot be printed without borders.
  - 800.0 mm (31.50 in)
  - 762.0 mm (30.00 in)
  - 600.0 mm (23.62 in)
  - 508.0 mm (20.00 in)
  - 500.0 mm (19.69 in)
  - 420.0 mm (16.54 in)
  - 406.4 mm (16.00 in)
  - 329.0 mm (12.95 in)
  - 304.8 mm (12.00 in)
  - 300.0 mm (11.81 in)
  - 297.0 mm (11.69 in)
  - 257.0 mm (10.12 in)
  - 203.2 mm (8.00 in)
- If printing cut paper, feed the paper vertically. If the paper is fed horizontally, it will still print vertical images.

Windows Software

- **Printer Driver**
  - Overview of the Printer Driver
  - Printer Driver Description
  - Updating the Printer Driver
- **Printing Using Canon Application Software**
  - Preview Guide
  - Free Layout plus Guide
  - Print Plug-In for Office Guide
  - Direct Print & Share Guide
  - Quick Utility Toolbox Guide
  - IJ Network Device Setup Utility Guide
  - Media Configuration Tool Guide
  - Device Management Console Guide
  - Accounting Manager Guide
  - PosterArtist Guide

Printing Using Canon Application Software

- Preview Guide
- Free Layout plus Guide
- Print Plug-In for Office Guide
- Direct Print & Share Guide
- Quick Utility Toolbox Guide
- IJ Network Device Setup Utility Guide
- Media Configuration Tool Guide
- Device Management Console Guide
- Accounting Manager Guide
- PosterArtist Guide

macOS Software

- **Printer Driver**
  - Overview of the Printer Driver
  - Description of Print Dialog
  - Updating the Printer Driver
- **Printing Using Canon Application Software**
  - Preview Guide
  - Free Layout Guide
  - Quick Utility Toolbox Guide
  - IJ Network Device Setup Utility Guide
  - Media Configuration Tool Guide
  - Device Management Console Guide
  - Accounting Manager Guide

Printer Driver

- Overview of the Printer Driver
- Description of Print Dialog
- Updating the Printer Driver

Overview of the Printer Driver

- Canon IJ Printer Driver
- Checking Layout in Preview before Printing
- Registering a Changed Printing Profile
- How to Open the Printer Driver Setup Dialog
- Page Setup Dialog
- Print Dialog
- Updating Media Information in Printer Driver
- Correcting Media Information in Printer Driver (When Printer Used in Shared Environment)
- Confirm the Printer Paper Information
- Setting Accounting Information
- Deleting the Undesired Print Job
- Display the Printing Status Screen
- Canon IJ Printer Utility2
- Opening the Canon IJ Printer Utility2
- Checking the Ink Status from Your Computer
- Instructions for Use (Printer Driver)

Canon IJ Printer Driver

The Canon IJ printer driver (called printer driver below) is a software that is installed on your computer for printing data with this printer.

The printer driver converts the print data created by your application software into data that your printer can understand, and sends the converted data to the printer.

Because different models support different print data formats, you need a printer driver for the specific model you are using.

Using Help of the Printer Driver

You can display Help function from the Print Dialog.

Select a setup item from the pop-up menu in the Print dialog. Then click ? at the bottom left of the screen to display an explanation of the item.

Help for the printer driver is displayed when the following pop-up menu item is selected:

- **Quality & Media**
- **Color Options**
- **Paper Detailed Settings**
- **Page Processing**

Checking Layout in Preview before Printing

You can display and check the print result before printing.

The procedure for displaying the print result before printing is as follows:

1. Select **Quality & Media** from the pop-up menu of the Print Dialog

2. Select Print Preview

   Select the **Print Preview** check box.

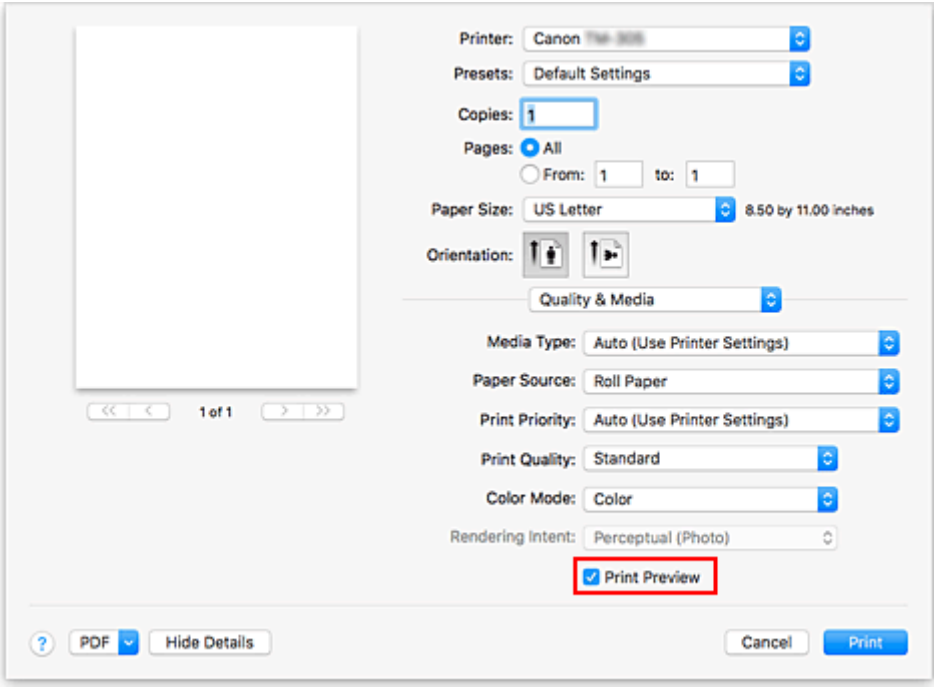

3. Complete the setup

   Click **Print**.
   When executing printing, start up Canon imagePROGRAF Preview to display the print results.

Note

- The printing results can be displayed even when selecting Canon imagePROGRAF Preview from **PDF**.

Registering a Changed Printing Profile

You can name and register the printing profile you made in the Print Dialog. The registered printing profile can be called up from **Presets** to be used. You can also delete the unnecessary printing profile.

The procedure for registering a printing profile is as follows:

Registering a Printing Profile

1. In the Print dialog, set the necessary items

2. Select **Save Current Settings as Preset...** from the **Presets**

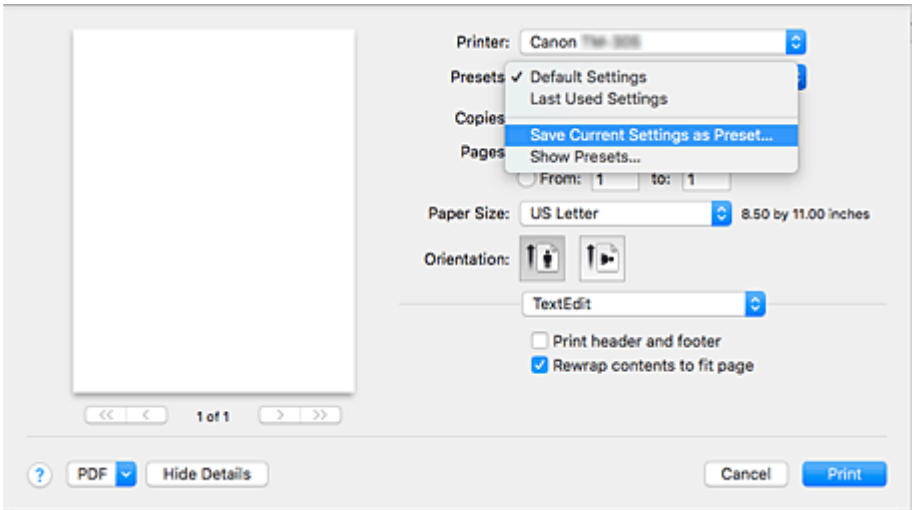

3. Save the settings

   In the displayed dialog, enter a name in **Preset Name**, and if necessary, set **Preset Available For**. Then click **OK**.

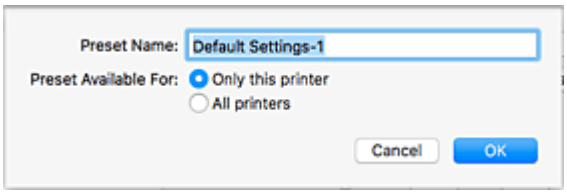

Important

- There are also print settings that cannot be saved to preset.

Using Registered Printing Profile

1. On **Presets** in the Print dialog, select the name of printing profile you want to use

   Printing profile in the Print dialog will be updated to the called profile.

Deleting Unnecessary Printing Profile

1. Select the printing profile to be deleted

   In the print dialog, select **Show Presets...** in the **Presets** section. Then in the dialog that appears, select the name of the printing profile to be deleted.

2. Delete the printing profile

   Click **Delete**, and click **OK**. The selected printing profiles will be deleted from **Presets**.

How to Open the Printer Driver Setup Dialog

You can display the printer driver setup dialog from the application software you are using.

Opening the Page Setup Dialog

Use this procedure to set the page (paper) settings before printing.

1. Select **Page Setup...** from the **File** menu of the application software

   The Page Setup Dialog opens.

Opening the Print Dialog

Use this procedure to set the print settings before printing.

1. Select **Print...** from the **File** menu of the application software

   The Print Dialog opens.

Page Setup Dialog

In the Page Setup dialog, you configure the basic print settings such as the size of paper loaded in the printer or the scaling ratio.

To open the Page Setup dialog, you typically select **Page Setup...** from the **File** menu of your application software.

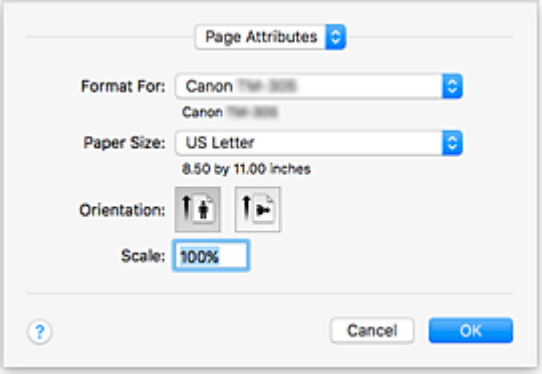

Settings

Click the pop-up menu, and then select the following items:

Page Attributes

Set the paper size or scaled printing.

Save as Default

You can save the attributes of the displayed page as the default settings.

Format For

Select the model to be used for printing.

Paper Size

Select the size of the paper to be used for printing.

To set a non-standard size, select **Manage Custom Sizes...**.

Orientation

Select the print orientation.

Scale

Set the scaling percentage.

You can expand or reduce the size of the document when printing.

Print Dialog

In the Print dialog, you can set paper type, paper source and print quality to start printing.

To open the Print dialog, you typically select **Print...** from the **File** menu of your application software.

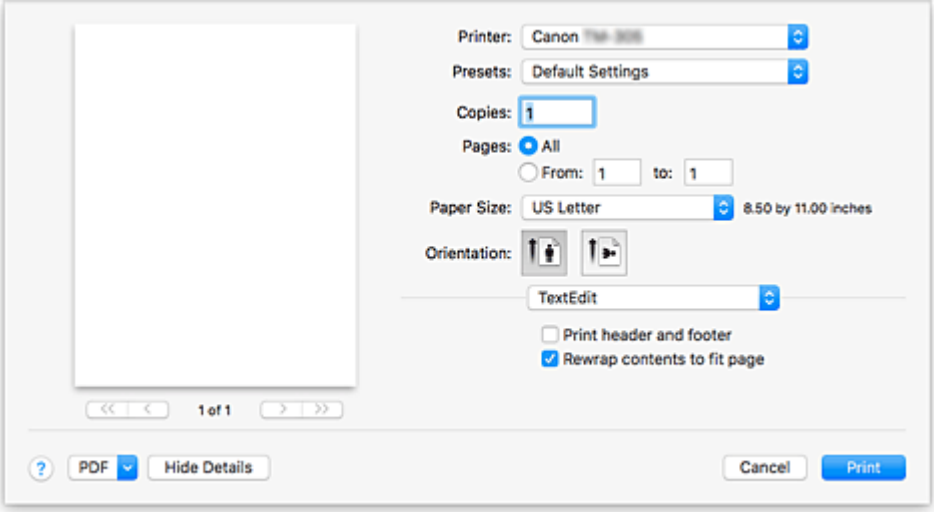

Printer

Select the model to be used for printing.

When you click **Add Printer...**, a dialog for specifying the printer opens.

Presets

You can save or delete the settings of the Print dialog.

Note

- You can select **Show Presets...** to check the print settings that are set in the Print dialog.

Copies

You can set the number of copies to be printed.

Note

- You can set collated printing by choosing **Paper Handling** from the pop-up menu.

Pages

You can set the range of pages to be printed.

Paper Size

Select the size of the paper to be used for printing.

To set a non-standard size, select **Manage Custom Sizes...**.

Orientation

Select the print orientation.

Pop-up Menu

You can switch between pages in the Print dialog by the pop-up menu. The first menu to appear differs depending on the application software that opened the Print dialog.

You can choose one of the following items from the pop-up menu.

Layout

You can set page layout printing.

Use **Reverse page orientation** to change the paper orientation, and use **Flip horizontally** to print a mirror image of the document.

Color Matching

You can select the color correction method.

Paper Handling

You can set the pages to be printed on paper and the print order.

Cover Page

You can output cover pages both before and after a document.

Quality & Media

You can set basic print settings that match the printer.

Color Options

You can adjust the print colors as you desire.

Paper Detailed Settings

Specifies detailed print settings that match the media type loaded in the printer.

Page Processing

You can configure the detailed settings when printing to roll paper, and adjust the amount of the source document that sticks out from the page when printing all borderless.

Supply Levels

A rough indication of the remaining ink level is displayed.

PDF

You can save a document in PDF (Portable Document Format) format.

By starting up Canon imagePROGRAF Free Layout, it is possible to allocate multiple source documents, and display the print results in imagePROGRAF Preview.

Updating Media Information in Printer Driver

This function gets the latest media information from the printer and updates the media information in the printer driver.

When the media information is updated, the media displayed for **Media Type** on the **Quality & Media** screen is updated to the latest information.

The procedure for updating media information is described below.

Update Media Information

1. From the Canon IJ Printer Utility2 pop-up menu, select **Media Information**

2. Click **Update Media Information**

   A dialog appears.

3. Check that the media information has updated

   By following the dialog instructions, check that the printer is on, and then click **OK**.
   After checking whether or not the printer media information needs to be updated, a message will be displayed.
   If the printer media information is up to date, click **OK** and finish updating media information.
   If the information needs to be updated, follow the below steps to do so:

4. Update media information

   Check the message and click **Update**.
   The printer driver media information will update.
   When the authentication screen appears, enter the administrator's name and password, and then click **Install Helper**.

   Important

   - It may take some time to update the media information.
   - Do not change media information on the printer while you are updating media information on the driver.

5. Finish updating media information

   When a confirmation message appears, click **OK**.
   The media information will be updated.

   Important

   - Restart the application or software you are printing from after updating media information.

Important

- Ensure that a user with administrator privileges carries out the media information update.
  Users other than administrators can check if a media information update is required, but cannot carry out the update itself.
- When you have added, deleted, or edited media using administrative tools (the Media Configuration Tool) but have not updated the media information, issues may arise such as the inability to print.

Note

- If the printer is being shared, **Correct Media Information** will display on the client machine.

Correcting Media Information in Printer Driver (When Printer Used in Shared Environment)

The printer driver media information will be corrected.

Carrying out a media information correction will correct the configuration of the media information in the printer driver.

The procedure for correcting media information is described below.

Correct Media Information

1. From the Canon IJ Printer Utility2 pop-up menu, select **Media Information**

2. Click **Correct Media Information**

   After checking whether or not the printer driver's media information is correct, a message will be displayed.
   If the printer media information is set correctly, click **OK** and finish correcting media information.
   If the information needs to be corrected, follow the below steps to do so:

3. Correct media information

   When a confirmation message appears, click **OK**.
   The printer driver media information will be corrected.
   When the authentication screen appears, enter the administrator's name and password, and then click **Install Helper**.

4. Complete media information correction

   When a confirmation message appears, click **OK**.
   The paper information will be corrected.

Important

- Restart the application or software you are printing from after correcting media information.

Note

- **Media Information** will only be displayed on the client machine in use when the printer is being shared.

Confirm the Printer Paper Information

You can check the size and type of paper that was set to the printer.

1. From the Remote UI, select **Printer status**

2. Check printer's paper information

   The size and type of the media set on the printer main unit is displayed by feed position.

Setting Accounting Information

By Setting Accounting Information, you add IDs to print jobs, and use the printer and cost management tool to tabulate print history information for any ID.

The procedure for Setting Accounting Information is described below.

1. From the Canon IJ Printer Utility2 pop-up menu, select **Accounting**

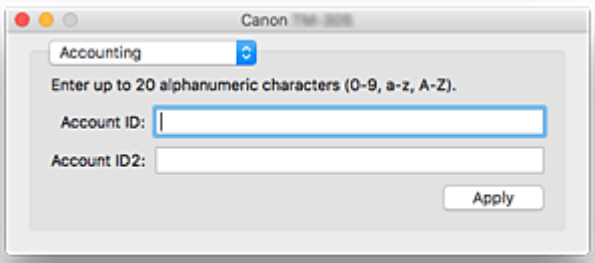

2. Set Account ID

   Set an Account ID, as necessary.

   Account ID/Account ID2

   Enter the Account ID to be set. Enter the ID by using up to 20 alphanumeric characters (0 to 9, a to z, A to Z).

3. Apply settings

   Check that the printer is on, and then click **Apply**.
   When the confirmation message appears, click **OK**.
   The setting is now valid.

Note

- If the printer is being shared, **Accounting** information cannot be set on client machines.

Deleting the Undesired Print Job

If the printer does not start printing, canceled or failed print job data may be remaining.
Delete unnecessary print jobs from the print status check screen.

1. Open **System Preferences**, and select **Printers & Scanners**

2. Select your model, and then click **Open Print Queue...**

   The print status check screen appears.

3. Select the unnecessary print job and click ⊗

   The selected print jobs will be deleted.

Displaying the Printing Status Screen

Check the print progress according to the following procedure:

1. Launch the printing status screen

   - If the print data has been sent to the printer

     The printing status screen opens automatically. To display the printing status screen, click the (the printer icon) displayed on the Dock.
   - If the print data has not been sent to the printer

     Open **System Preferences**, and select **Printers & Scanners**.
     To display the printing status screen, select the name of your printer model from the printer list, and then click **Open Print Queue...**.

2. Checking the printing status

   You can check the name of the file being printed or ready for being printed.

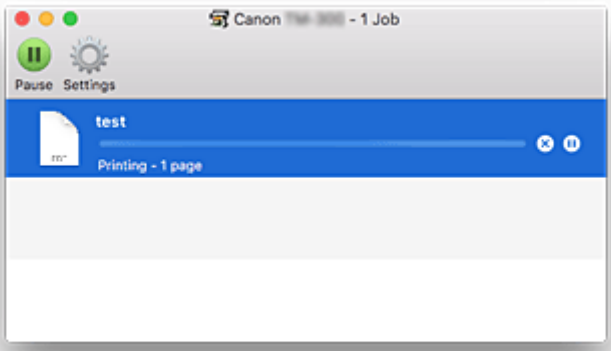

Deletes the specified print job.

Stops printing the specified document.

Resumes printing the specified document.

Stops printing all documents.

Displayed only when printing of all documents is being stopped, and resumes printing all documents.

Note

- Depending on your model, the printer icon display may be different.

Important

- If an error occurs, an error message will appear on the printing progress confirmation screen.
- The content of the error message may differ depending on the OS version.

- The printer part names in the error message may differ from what is listed in this manual.
- If the content of the error message is difficult to understand, check the error message displayed on the printer operation panel.

Canon IJ Printer Utility2

The Canon IJ Printer Utility2 allows you to update media information and configure accounting.

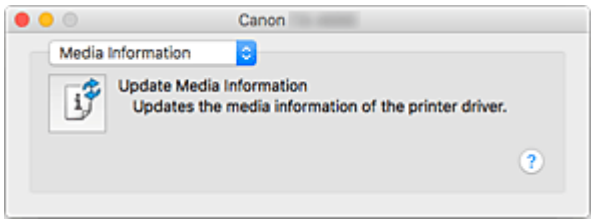

You can switch between pages in Canon IJ Printer Utility2 by the pop-up menu. You can choose one of the following items from the pop-up menu.

Media Information

Gets the latest media information from the printer and updates the media information in the printer driver.

Accounting

Allows you to set IDs for each job and each user, and manage the print history and print jobs.

Note

- If the printer is being shared, **Accounting** information cannot be set on client machines.

Note

- To operate the Canon IJ Printer Utility2, you must first turn on the printer.

Opening the Canon IJ Printer Utility2

To open the Canon IJ Printer Utility2, follow the steps below.

1. Open **System Preferences**, and select **Printers & Scanners**

2. Start the Canon IJ Printer Utility2

   Select your model from the printer list, and click **Options & Supplies...**.

   Click **Open Printer Utility** in **Utility** tab.

   Canon IJ Printer Utility2 is launched.

Checking the Ink Status from Your Computer

You can check the detailed information such as the remaining ink level and the ink tank types of your model.

If you select **Printer status** from Remote UI, an illustration showing the status of the ink tanks and maintenance cartridge appears.

Estimated ink levels

You can check the types and levels of ink.
When ink levels are running low or an error occurs because there is no ink, a notification icon will appear.

Ink number

You can look up the correct ink tank for your printer.

Maintenance cartridge usage

You can check the estimated usage amount of the maintenance cartridge.
When capacity levels are low or the cartridge is at full capacity, a notification icon will appear.

Note

- To check the ink levels or the estimated usage of the maintenance cartridge, you can also display the pop-up menu of the Print dialog and select **Supply Levels**.

Instructions for Use (Printer Driver)

This printer driver is subject to the following restrictions. Keep the following points in mind when using the printer driver.

Restrictions on the Printer Driver

- When you set up the Page Setup dialog, be sure to begin by selecting the model you are using from the **Format For** list. If you select another printer, printing may not be performed properly.
- The following functions cannot be used in macOS, though they can be used in Windows computers.
  - Poster Printing
  - Stamp Printing
  - Sharpen Text
  - Adjust Faint Lines
  - Preview Before Printing
- Depending on the application software that you are using, a preview may not be displayed on the left side of the Print dialog.
- If you connect this printer and AirPort with a USB cable and print, you must install the latest AirPort firmware.

Notes on Adding a Printer

- If you will be installing the Canon printer driver on a macOS and using the printer through a network connection, select the printer name that contains Bonjour in the **Add** (**Add Printer**) dialog.
- If several options are displayed under **Use** in the **Add** (**Add Printer**) dialog, choose Canon XXX (where "XXX" is your model name) in order to maximize your ability to control settings during printing.

Description of Print Dialog

- Quality & Media
- Color Options
- Paper Detailed Settings
- Page Processing
- Specifications

Quality & Media

This dialog allows you to create a basic print setup in accordance with the paper type. Unless special printing is required, normal printing can be performed just by setting the items in this dialog.

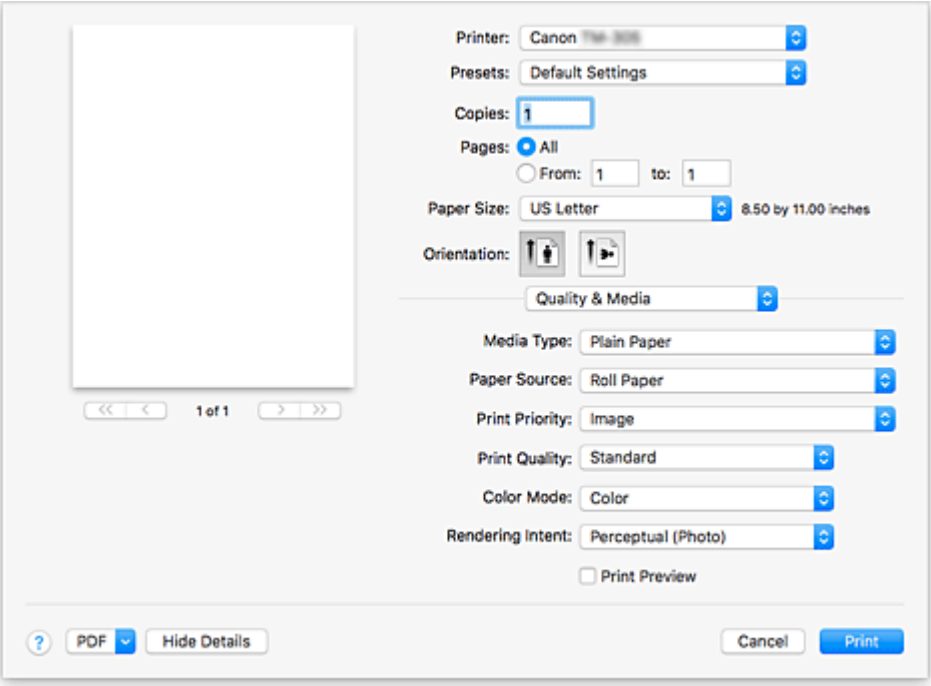

Media Type

Select the type of media to be used.

You must select the type of media actually loaded in the printer. This selection enables the printer to carry out printing properly for the material of the media used.

Note

- After updating media information of the printer, start up the Canon IJ Printer Utility2 and update media information.

Paper Source

Select the source from which paper is supplied.

Roll Paper

Feeds paper using roll paper.

Cut Sheet

Feeds paper using the cut paper.

Print Priority

Select elements to prioritize for print results.

Image

Prioritize image results when printing.

Line Drawing/Text

Prioritize detailed lines and text when printing.

Auto (Use Printer Settings)

Use printer settings when printing.

Print Quality

Select the one that is closest to the original document type and the purpose.

When one of the radio buttons is selected, the appropriate quality will be set automatically.

High

Gives priority to print quality over printing speed.

Standard

Prints with average speed and quality.

Fast

Gives priority to printing speed over print quality.

Custom

Select this radio button to specify a quality.

Quality

When you select **Custom** in **Print Quality**, you can use the slider bar to adjust the print quality level.

Color Mode

Select how to process colors.

Color

Print in color.

Monochrome

Print in grayscale.

Monochrome Bitmap

Print all non-white parts in black.

Rendering Intent

Specify the method of matching to use when selecting **Canon Color Matching** in **Color Matching**.

Perceptual (Photo)

Reproduces colors of general photos naturally and features smooth gradation. In addition, selecting this setting allows you to adjust colors easily using an application software.

Saturation (Poster/CAD)

Reproduces vivid colors on data such as a poster. In addition, prints in easy-to-see colors suitable for line drawing.

No Color Correction

Performs printing without color matching.

Print Preview

You can start up the Canon imagePROGRAF Preview, and check what the printing results will be before executing the print.

Check this check box to display a preview before printing.

Related Topics

- Switching the Paper Source to Match the Purpose
- Setting the Print Quality Level (Custom)
- Printing a Color Document in Monochrome

Color Options

This dialog allows you to adjust the print color as you like. If the color of the printed image is not as expected, adjust the properties in the dialog and retry printing.

The adjustments made here do not affect the colors of the original print data unlike application software dedicated to image processing. Use this dialog just to make fine adjustments.

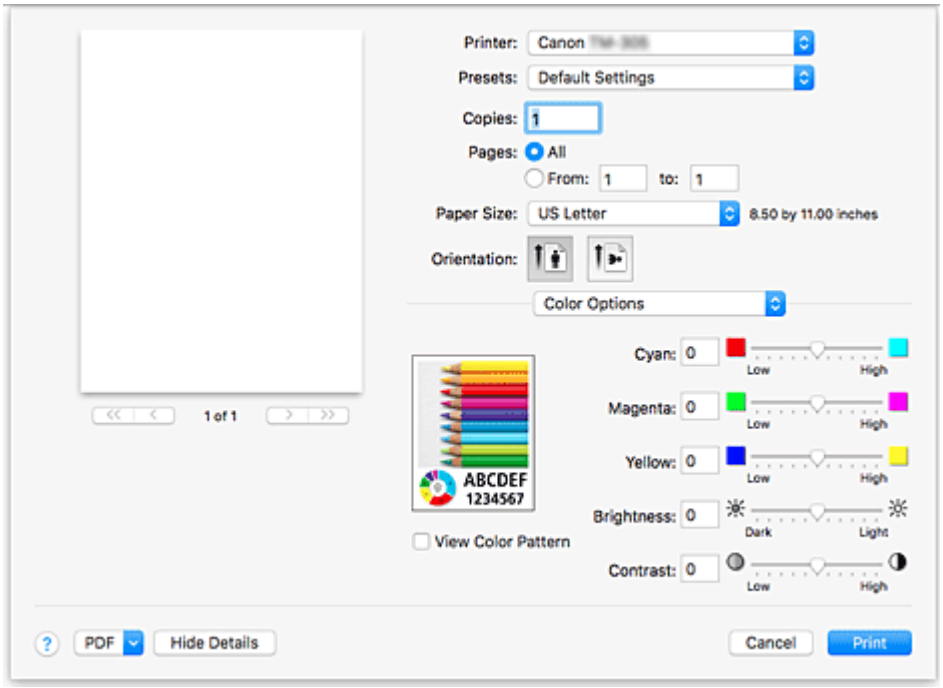

Preview

Shows the effect of color adjustment.

As you adjust each item, the effects are reflected in the color and brightness.

View Color Pattern

Displays a pattern for checking color changes produced by color adjustment.

When you want to display the sample image with a color pattern, check this check box.

Note

- When **Monochrome** or **Monochrome Bitmap** is selected in **Color Mode** under **Quality & Media**, the sample graphic is displayed in monochrome.

Color balance (Cyan, Magenta, Yellow)

If necessary, adjust the strength of each color. To strengthen a color, drag the slider to the right. To weaken a color, drag the slider to the left.

You can also directly enter a value linked to the slider. Enter a value in the range from -50 to 50.

Adjusting the color balance will result in variations in the balance among the volumes of the individual color inks and hence in the hues of the document as a whole.

Use the printer driver only when adjusting the color balance slightly. To change the color balance significantly, use the application software.

Brightness

Adjusts the brightness of your print. You cannot change the levels of pure white and black. However, the brightness of the colors between white and black can be changed. Colors become brighter as you

drag the slider toward the right and darker as you drag the slider toward the left. You can also directly enter brightness values that are linked to the slider bar. Enter a value in the range from -50 to 50.

Contrast

The Contrast function changes the differences between light and dark in images during printing.
To make the differences between the light and dark portions of images greater and more distinct, increase the contrast. On the other hand, to make the differences between the light and dark portions of images smaller and less distinct, reduce the contrast.
You can also directly enter a value linked to the slider. Enter a value in the range from -50 to 50.

Important

- When **Monochrome** or **Monochrome Bitmap** is selected in **Color Mode** under **Quality & Media**, the color balance (**Cyan**, **Magenta**, **Yellow**) are unavailable.
- If **Monochrome Bitmap** is selected for **Color Mode** in **Quality & Media**, **Brightness** and **Contrast** cannot be set.
- If you select **ColorSync** for **Color Matching**, then the color balance (**Cyan**, **Magenta**, **Yellow**), **Brightness**, and **Contrast** appear grayed out and are unavailable.

Related Topics

- Specifying Color Correction
- Adjusting Color Balance
- Adjusting Brightness
- Adjusting Contrast

Paper Detailed Settings

Use this dialog box to set detailed print settings that match the media type loaded on the printer.

If the paper becomes stained during printing or if the quality of the print results is less than expected, using these settings may improve the print results.

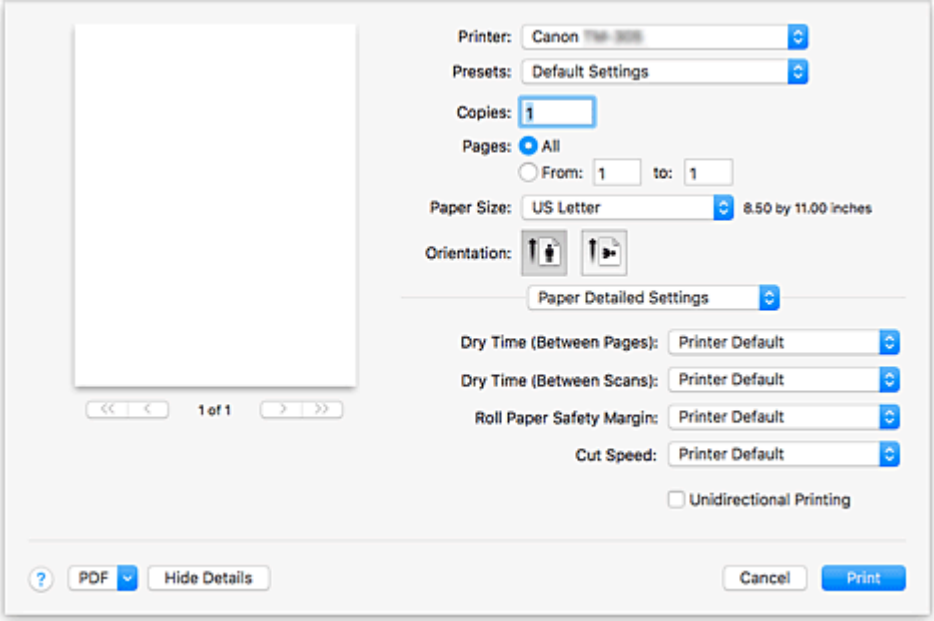

Dry Time (Between Pages)

Allows you to set the interval between the time each page is printed and the time it exits the printer. Since a certain waiting time is required for the ink to dry before the roll paper is cut, even when, on **Page Processing**, **Automatic Cutting** is set to **Yes**, you can let the document fall into the basket with the ink dried.

The **Dry Time (Between Pages)** setting is effective only for roll paper.

Printer Default

Applies the settings configured in the control panel of the printer unit.

None

Documents are ejected immediately after printing is over.

30 seconds / 1 minute / 3 minutes / 5 minutes / 10 minutes / 30 minutes / 60 minutes

After printing is over, documents are ejected after the set time has elapsed.

Dry Time (Between Scans)

Allows you to set the interval between the printing of a scan on a page and the printing of the next scan. Prevents ink bleeding on a page or uneven coloring during borderless printing.

Printer Default

Applies the settings configured in the control panel of the printer unit.

None

Each scan is printed immediately after the previous one.

0.5 seconds / 1 second / 3 seconds / 5 seconds / 7 seconds / 9 seconds

After one scan has been printed, the next one will be printed after the set time has elapsed. Increase the interval depending on the occurrence of bleeding and uneven coloring.

Roll Paper Safety Margin

Allows you to specify the length of the white margins on the edges of the paper in order to make even significantly curled paper adsorb to the platen.

Printer Default

Applies the settings configured in the control panel of the printer unit.

3mm

Prints in standard-size.

Choose this setting if there are no particular problems when printing.

20mm

Choose this setting in case of chafing against the print head, for example when using significantly curled paper.

Cut Speed

Allows you to select the speed of automatic cutting. Use it to adjust the automatic cutting function when clean cutting is not possible.

Printer Default

Applies the settings configured in the control panel of the printer unit.

Fast

Choose this if clean cut surfaces are not possible with the **Standard** setting.

Standard

Choose this if there are no particular problems with automatic cutting.

Slow

Choose it when using adhesive paper in order to prevent the glue from sticking to the cutter and to avoid a drop in cutting performance.

Unidirectional Printing

Suppresses uneven coloring and line shifts during printing.

To perform unidirectional printing, check this check box.

Page Processing

You can configure advanced settings for printing on roll paper and adjust how much of the document extends outside the paper when printing borderless.

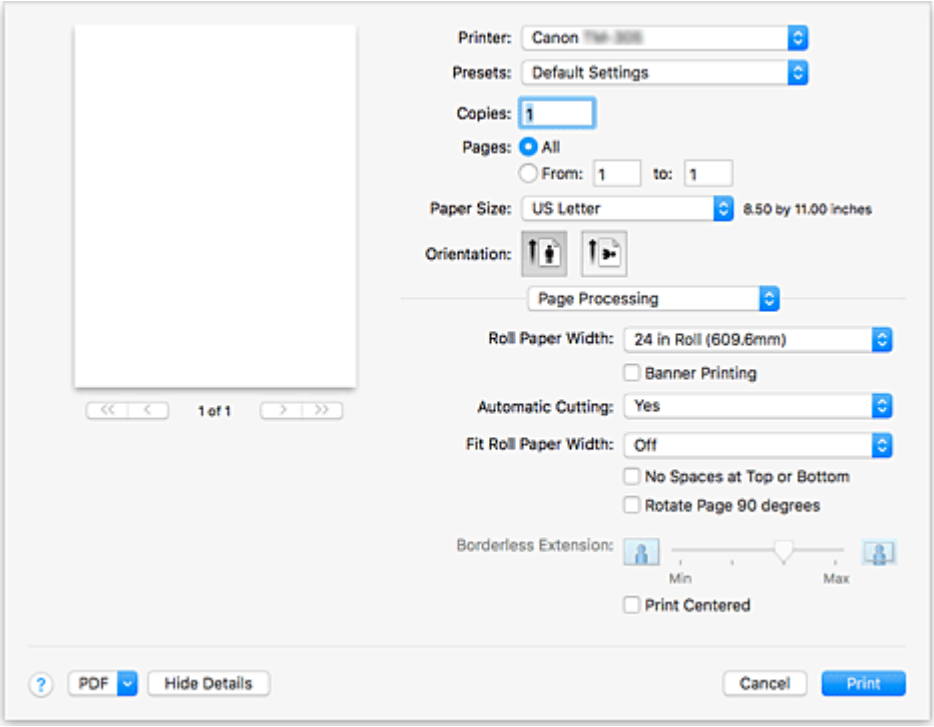

Roll Paper Width

Select the roll paper width.

Select the width that matches the width of the roll paper loaded in the printer.

Banner Printing

Select this check box to print documents extending over several pages as one continuous document without any spaces between the pages.

Automatic Cutting

You can set whether to have the paper cut automatically or to have cut lines printed on the paper

The following settings can be configured for automatic cutting

Printer Default

Applies the settings configured in the control panel of the printer unit.

None

After printing is over, the printer goes on to print the next set of data without cutting the paper into individual pages.

Print Cut Guideline

After printing is over, the printer prints cutting lines on each page and goes on to print the next set of data.

Fit Roll Paper Width

The printer automatically expands or reduces the document to match the roll paper width and then prints the document.

Off

The document is printed as-is without being expanded or reduced.

On (Bordered)

The printer automatically expands or reduces the document to match the roll paper width and then prints the document.

On (Borderless)

When borderless printing is performed, the printer automatically enlarges or reduces the document to match the roll paper width and then prints the document.

No Spaces at Top or Bottom

When printing on roll paper, you can save paper by reducing the upper and lower margins when printing.

Rotate Page 90 degrees

Rotate the long edge of the document 90 degrees, match it to the width of the roll paper, and then print the document.

When you print a portrait document onto roll paper, you can save paper by rotating the document 90 degrees and print the document horizontally relative to the paper.

Borderless Extension

Adjusts how much of the document extends outside the paper by using the **Borderless Extension** slider bar.

Drag to slider bar to the right to increase the extension amount, and to the left to decrease the extension amount.

Print Centered

Prints document in center of paper.

Note

- Depending on the settings, some items cannot be set.

Related Topic

- Prints without Edges Based on the Scenarios

Specifications

Important

- The following values may vary depending on the operating environment.

Paper

For details on the compatible media types, see "Paper Information List."

Paper width		For details on the paper widths supported by the printer, see "Paper Sizes."
Minimum paper length		11.00 inches (279.4 mm)
Maximum printable length	Rolls*1	59 feet (18 m)
	Sheets	5.2 feet (1.6 m)
Thickness	Rolls	3-31 mil (0.07-0.8 mm)
	Sheets	3-31 mil (0.07-0.8 mm)
Roll maximum outer diameter		5.9 inches (150 mm) or shorter
Supported paper core inner diameter		2.00 inches/3.00 inches (50.8 mm/76.2 mm)
Print area		For details about Print Area, see "Print Area."

*1 Varies depending on the operating system or application.

Updating the Printer Driver

- Obtaining the Latest Printer Driver
- Delete the Unnecessary Canon IJ Printer from the Printer List
- Before Installing the Printer Driver
- Installing the Printer Driver

Obtaining the Latest Printer Driver

By updating the printer driver to the latest version of the printer driver, unresolved problems may be solved.

You can access our website and download the latest printer driver for your model.

Important

- You can download the printer driver for free, but any Internet access charges incurred are your responsibility.

Related Topics

- Before Installing the Printer Driver
- Installing the Printer Driver

Delete the Unnecessary Canon IJ Printer from the Printer List

A Canon IJ Printer that you no longer use can be deleted from the printer list.
Before deleting the Canon IJ Printer, disconnect the cable that connects the printer to the computer.

The procedure to delete the unnecessary Canon IJ Printer from the printer list is as follows:

You cannot delete the Canon IJ Printer unless you are logged in as a user with the administrative right. For information about an administrative user, refer to the user's manual for the macOS.

1. Open **System Preferences**, and select **Printers & Scanners**

2. Delete the Canon IJ Printer from the printer list

   From the printer list, select the Canon IJ Printer to be deleted, and then click **-**.

   Click **Delete Printer** when the confirmation message appears.

Before Installing the Printer Driver

This section describes the items that you should check before installing the printer driver. You should also refer to this section if the printer driver cannot be installed.

Checking the Personal Computer Settings

- Terminate all running applications.
- Log on as a user who has the administrator account. The installer will prompt you to enter the name and password of the administrative user. When multiple users are using macOS, log on with the account of the administrator who registered first.

Important

- When you upgrade macOS, all printer drivers that were installed will be deleted.
  If you plan to continue using this printer, re-install the latest printer driver.

Related Topics

- Obtaining the Latest Printer Driver
- Installing the Printer Driver

Installing the Printer Driver

You can access our web site through the Internet and download the latest printer driver for your model.

The procedure for installing the downloaded printer driver is as follows:

1. Mount the disk

   Double-click the disk image file you have downloaded.
   The file is unpacked, and then the disk is mounted.

2. Start the installer

   Double-click "PrinterDriver_XXX_YYY.pkg" (where "XXX" is your model name, and "YYY" is version) contained in the disk.

3. Start the installation

   Install the printer driver according to the messages on the screen.

   When the Software License Agreement is displayed, check the contents, and click **Continue**. If you do not agree to the terms of the Software License Agreement, you cannot install this software.

4. Selecting the install destination

   If necessary, select where you want to install the printer driver, and then click **Continue**.

5. Executing the installation

   Click **Install**.
   When the authentication screen is displayed, enter the name and password of the administrator, and then click **Install Software**.

6. Complete the installation

   When the completion message appears, click **Close**.

The printer driver is installed successfully.

Important

- If the Installer does not operate properly, select **Quit Installer** from the **Installer** menu of the Finder to quit the Installer. Then start the Installer again.
- You can download the printer driver for free, but you are responsible for paying any connection fees to the Internet.

Related Topics

- Obtaining the Latest Printer Driver
- Delete the Unnecessary Canon IJ Printer from the Printer List
- Before Installing the Printer Driver

Printing Using Canon Application Software

- Preview Guide
- Free Layout Guide
- Quick Utility Toolbox Guide
- IJ Network Device Setup Utility Guide
- Media Configuration Tool Guide
- Device Management Console Guide
- Accounting Manager Guide

Managing Print Jobs

- **Checking Print Job Information**
- **Accounting Manager Guide**
- **Basic Print Job Operations**
  - Managing Job Queue (Delete)

Checking Print Job Information

You can check the details of the print job being processed (job queue) or delete it from the Web browser or the control panel of the printer.

- **Using web browser:**

  Log in to the printer from web browser, select **Job management**, and perform operations.

  Configuration Changes Using Web Browser

- **Using operation panel:**

  Tap (**Jobs**) on the HOME screen, and perform operations.

Basic Print Job Operations

- Managing Job Queue (Delete)

Managing Job Queue (Delete)

Print jobs being processed by the printer are collectively called the job queue. You can delete jobs in the job queue as needed.

This operation is available using the operation panel or Remote UI.

- Using Operation Panel
- Using Remote UI

- **Delete**

  You can delete the job queue that are not currently being deleted.

Using Operation Panel

1. Make sure printer is turned on.

2. On the HOME screen, tap (**Jobs**).

   - Menu Operations

3. Tap **Print job**.

4. In the list, tap the target job.

5. Tap **Delete**.

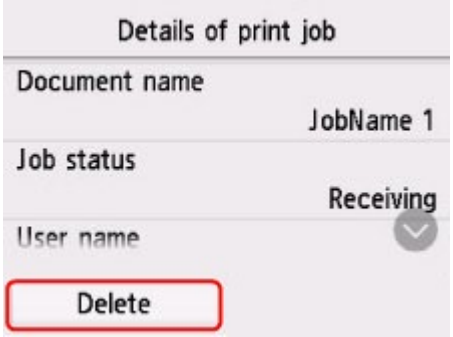

6. Confirm displayed message and tap **Yes**.

Note

- Select **Delete all print jobs** on **Job management** to delete all jobs in the job queue

  - Job management

Using Remote UI

1. Start up Remote UI.
2. Select **Job management**.
3. Select **Print job**.
4. In the list, select the target job.
5. Select **Delete**.

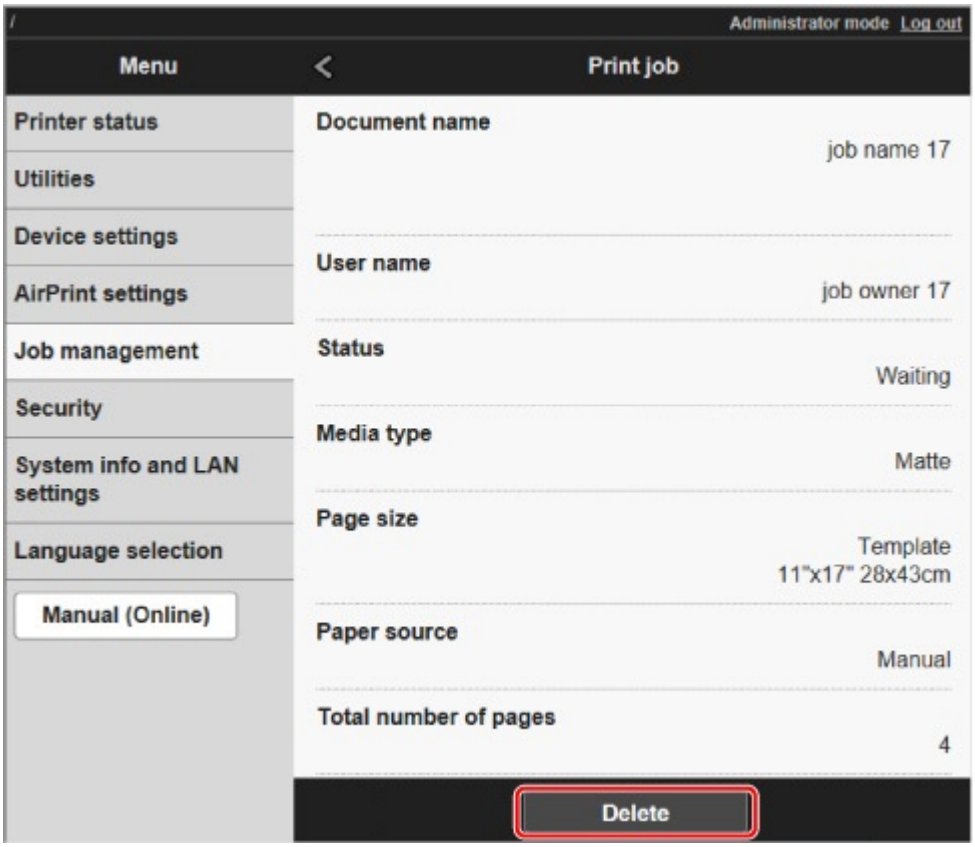

Frequently Asked Questions

General FAQ

- I want to easily create vertical or horizontal banners
- Does this printer support sub-ink tank system
- I want to know how to configure roll cutting
- I want to configure so that the roll is cut automatically after waiting for the ink to dry
- How do I print without borders
- I want to know the paper types that can be used in this printer
- The paper type that I want to print is not displayed on the Touch Screen
- Can I perform duplex printing
- I want to perform enlargement printing
- Network Settings and Common Problems

Solve Problems

Problems Regarding Paper

- Remove Jammed Roll Paper
- Remove a Jammed Sheet
- Remove Jammed Paper (Paper Feed Slot)
- Roll paper cannot be inserted into the Paper Feed Slot
- Roll Paper Remains/Lacks under Quantity Management
- Cannot load sheets
- Paper is not cut straight
- Paper is not cut
- Cutter Blade Does Not Work While Cutting Is in Progress
- Dent in the Tip of Paper
- The size of clear film cannot be detected
- Printer Keeps Ejecting the Roll Paper
- Margins are wide
- When printing on roll paper, the printed surface becomes scratched

Printing Does Not Start

- Printer Suddenly Stopped Working for Some Reason
- The Data lamp on the Operation Panel does not light up
- The printer does not respond even if print jobs are sent
- "Preparing the ink system." is displayed
- "Agitating the ink" is displayed

The Printer Stops During a Print Job

- Printing stops and an error message is displayed
- The printer ejects blank, unprinted paper
- The printer stops when printing a HP-GL/2 job (the carriage stops moving)

Problems with the Printing Quality

- Printing is faint
- Paper rubs against the Print Head
- The edges of the paper are dirty
- The surface of the paper is dirty
- The back side of the paper is dirty
- Immediately after borderless printing, the trailing edge margin is soiled during regular printing
- Printed colors are inaccurate
- Banding in different colors occurs
- Colors in printed images are uneven
- Image edges are blurred or white banding occurs
- The contrast becomes uneven during printing
- The length of printed images is inaccurate in the feeding direction
- Images are printed crooked
- Documents are printed in monochrome
- Line thickness is not uniform
- Lines or colors are misaligned
- Borders appear in borderless printing

Cannot Print over Network

- Cannot Connect Printer to Network
- Cannot Print over TCP/IP Network
- Cannot Print over Bonjour networks (macOS)

Cannot Find Printer on Network

- Cannot Find Printer on Check Printer Settings Screen (Windows)
- Cannot Proceed beyond Printer Connection Screen/Connect Cable Screen
- Searching Printer by IP Address or Host Name During Setup
- Cannot Find Printer while Using Wi-Fi
- Cannot Find Printer while Using Wired LAN
- Cannot Print Using AirPrint

Installation Problems

- Removing Printer Software
- Taking Time to Setup Process (Windows)
- Failed to Printer Driver Installation (Windows)

HP-GL/2 problems

- With HP-GL/2, printing is misaligned
- Lines or images are missing in printed HP-GL/2 jobs
- Lines are printed too thick or thin in HP-GL/2 print jobs
- HP-GL/2 jobs are printed in monochrome (or color)
- Printed colors of lines are inaccurate during HP-GL/2 printing
- HP-GL/2 jobs are printed 6 mm larger than specified
- HP-GL/2 jobs are printed at maximum size, even if a standard size is specified
- HP-GL/2 printing takes a long time
- The printer stops when printing a HP-GL/2 job (the carriage stops moving)

Other Problems

- Printer does not turn on
- If the Printer Makes a Strange Sound
- Messages advising to check the maintenance cartridge are not cleared
- Printer consumes a lot of ink
- Printed pages are not collected cleanly in the basket
- Ink Level Detection

I want to easily create vertical or horizontal banners

You can print originals that are in landscape (or portrait) orientation automatically enlarged to fit the roll width. This is an easy way to create vertical or horizontal banners.

- Printing Hanging and Horizontal Banners (Large-Format Printing) (Windows)
- Printing Hanging and Horizontal Banners (Large-Format Printing) (macOS)

Does this printer support sub-ink tank system

This printer supports hot-swap ink tank replacement.

Even if an ink tank becomes empty during printing, since a certain amount of ink always is stored in a sub-ink tank, you can replace the ink tank while printing.

Replacing Ink Tanks

I want to know how to configure roll cutting

Cutting methods can be selected in the printer settings and printer driver settings.

To automatically cut roll paper after printing, open the **Cutting mode** settings on the printer, and then under **Automatic cut** set **Automatic Cutting** in the printer driver to **Yes**.

When using paper that is easily scratched, or paper where the ink requires extra time to fix, we recommend setting **Cutting mode** on the printer to **Eject cut**.

- Specifying the Cutting Method for Rolls
- Cutting Roll Paper after Printing (Windows)
- Cutting Roll Paper after Printing (macOS)

I want to configure so that the roll is cut automatically after waiting for the ink to dry

You can set an ink drying time in the printer driver.

You can also configure the same settings on the printer itself.

- Main Tab Description (Windows)
- Paper Detailed Settings (macOS)
- Specifying the Ink Drying Time for Rolls
- Menu Structure

How do I print without borders

If printing on roll paper, you can set borderless printing in the printer driver settings. (If printing on sheets, borderless printing is not possible)

- Prints without Edges Based on the Scenarios (Windows)
- Prints without Edges Based on the Scenarios (macOS)

I want to know the paper types that can be used in this printer

For information about paper that can be used with this printer, see the imagePROGRAF home page or refer to the media information list.

- Paper Information List

The paper type that I want to print is not displayed on the Touch Screen

If using a new paper type, start the **Media Configuration Tool** to get the latest media information.

- Updating paper information

Can I perform duplex printing

This printer cannot print double-sided.

An alternative to double-sided printing is to use the **Folded Duplex** function of the Windows software Canon Free Layout plus, which prints two pages on one side, folds the sheet back from the center, and hangs it.

I want to perform enlargement printing

Use the printer driver to adjust the original to the paper size and width, or print enlarged or reduced by specifying a magnification factor.

- Scaled Printing (Windows)
- Scaled Printing (macOS)

Network Settings and Common Problems

Here are frequently asked questions on network.

Cannot Find Printer

- Cannot Find Printer on Check Printer Settings Screen (Windows)
- Cannot Proceed beyond Printer Connection Screen/Connect Cable Screen
- Searching Printer by IP Address or Host Name During Setup
- Cannot Find Printer while Using Wi-Fi
- Cannot Find Printer while Using Wired LAN

Cannot Print or Connect

- Cannot Connect Printer to Network
- Cannot Print over TCP/IP Network
- Cannot Print over Bonjour networks (macOS)
- Printer Suddenly Stopped Working for Some Reason

LAN Setting Tips/Changing LAN Settings

- Printer Connection Methods
- Default Network Settings
- Another Printer Found with Same Name
- Connecting to Another Computer via LAN/Changing from USB to LAN Connection
- Printing Network Settings
- Reconfiguration Method of LAN Connection/Reconfiguration Method of Wi-Fi Connection
- Reconfiguration of Network Settings using the Remote UI
- Network Status and Troubleshooting

Problems Regarding Paper

- Remove Jammed Roll Paper
- Remove a Jammed Sheet
- Remove Jammed Paper (Paper Feed Slot)
- Roll paper cannot be inserted into the Paper Feed Slot
- Roll Paper Remains/Lacks under Quantity Management
- Cannot load sheets
- Paper is not cut straight
- Paper is not cut
- Cutter Blade Does Not Work While Cutting Is in Progress
- Dent in the Tip of Paper
- The size of clear film cannot be detected
- Printer Keeps Ejecting the Roll Paper
- Margins are wide
- When printing on roll paper, the printed surface becomes scratched

Remove Jammed Roll Paper

If roll paper jams, follow the steps below to remove jams.

1. Turn off printer.

   Turning the Printer On and Off

2. Positioning your hands as shown, open the roll paper cover.

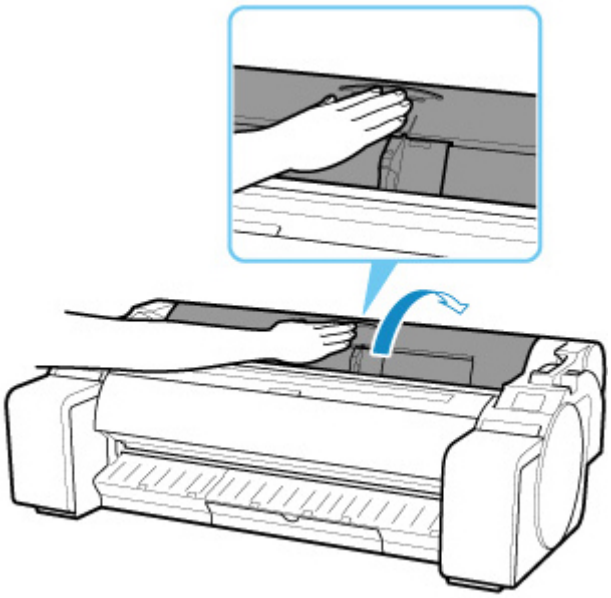

3. Cut loaded roll paper with regular scissors or the like.

   Before cutting, loose the roll paper and lift it up.

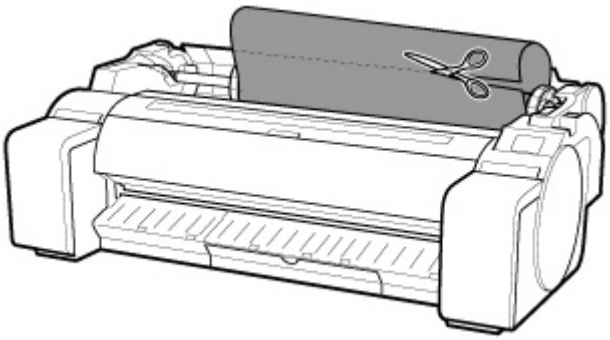

Caution

- When cutting paper, be careful to avoid injury or damage to the printer.

4. Holding it at the positions indicated, close the roll paper cover.

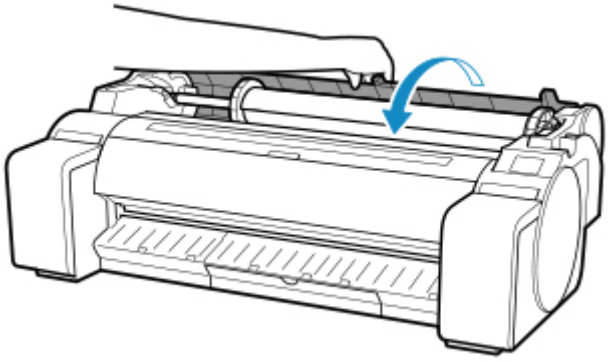

5. Push release lever back.

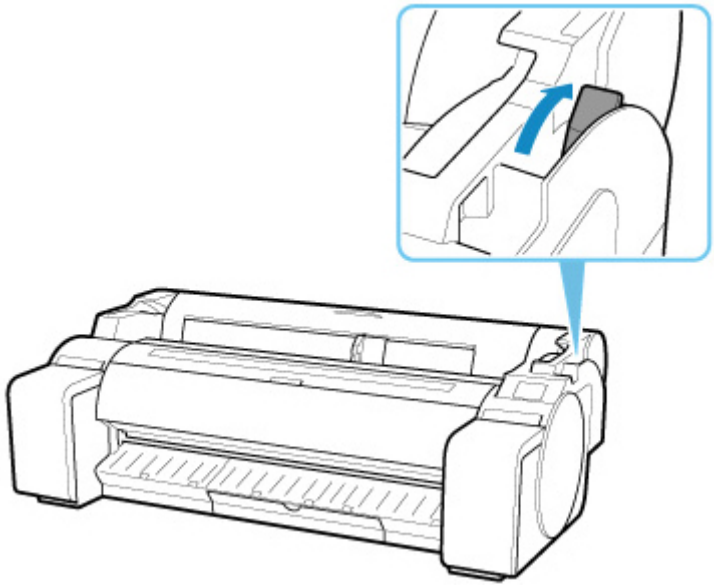

6. Remove jammed paper.

- If paper is jammed inside the top cover

    1. Open top cover and move carriage to the left or right side manually, away from the jam.

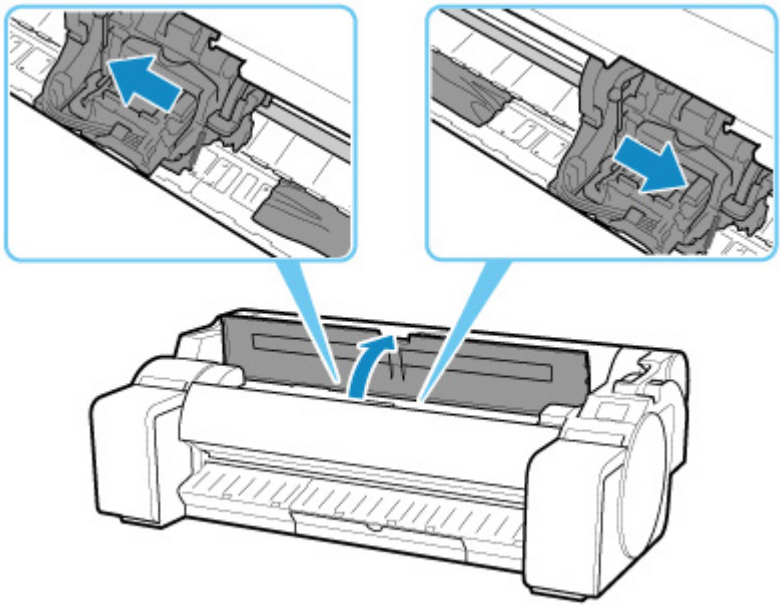

Important

- Do not move the carriage over jammed paper. This may damage the printhead.

2. Remove any jammed paper inside top cover.

   After removing the paper, make sure there are no other scraps of paper in the printer.

3. Close top cover.

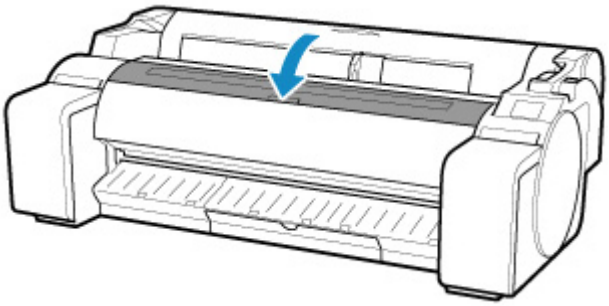

Important

- Do not touch the linear scale (A) or carriage shaft (B). This may stain your hands and damage the printer.

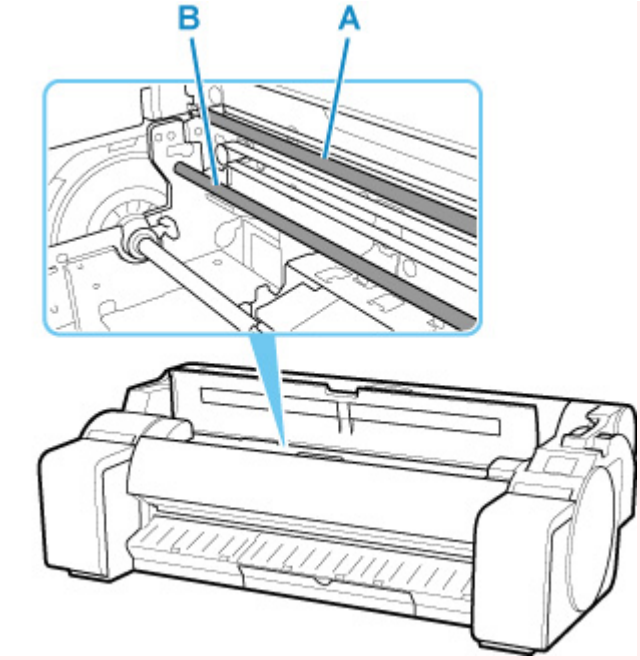

- If the paper from a roll is jammed by the paper feed slot

  Remove the jammed paper from the paper feed slot.

  After removing the paper, make sure there are no other scraps of paper in the printer.

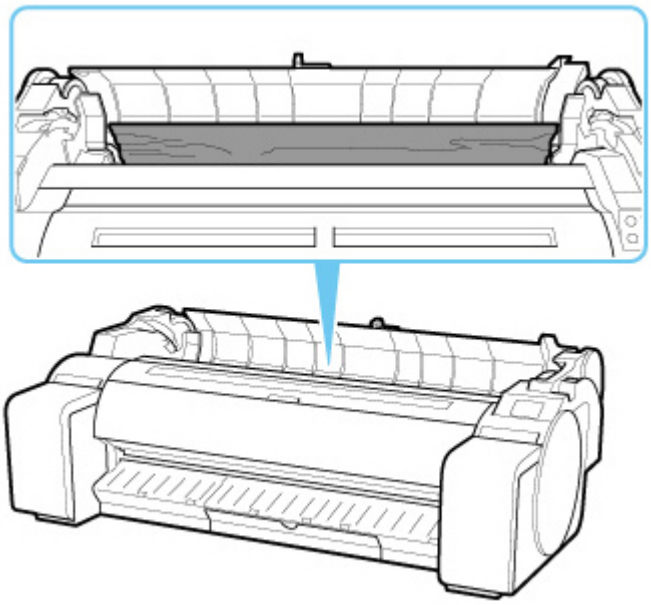

- If the paper is jammed by the ejection guide

  Remove the jammed paper from the output tray.

  After removing the paper, make sure there are no other scraps of paper in the printer.

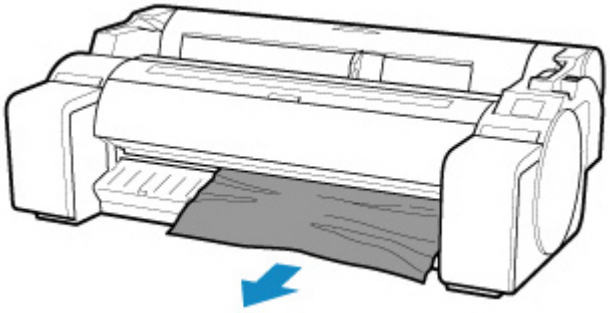

7. Pull release lever forward.

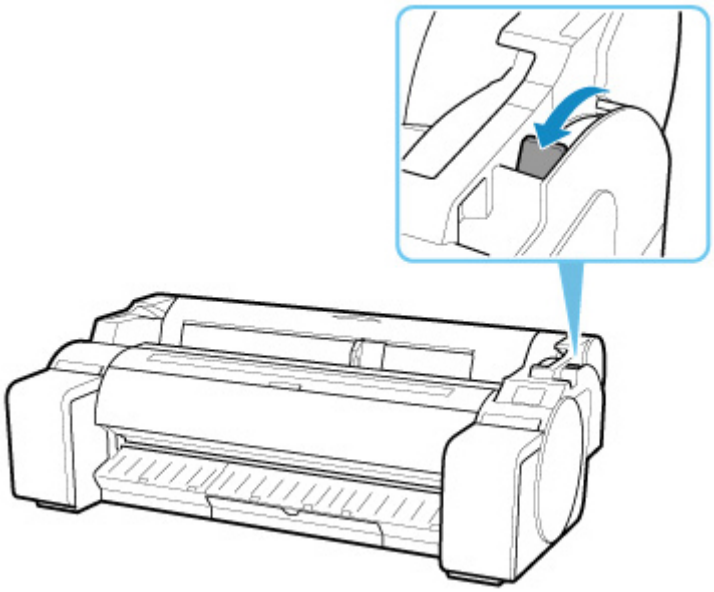

Important

- Changing the release lever position while printing is in progress causes paper jam, misaligned lines, or wrong colors. Be careful not to touch the release lever while printing in progress.

Q

Remove a Jammed Sheet

A

If a sheet jams, follow the steps below to remove it.

1. Turn off printer.

   [Turning the Printer On and Off]

2. Push release lever back.

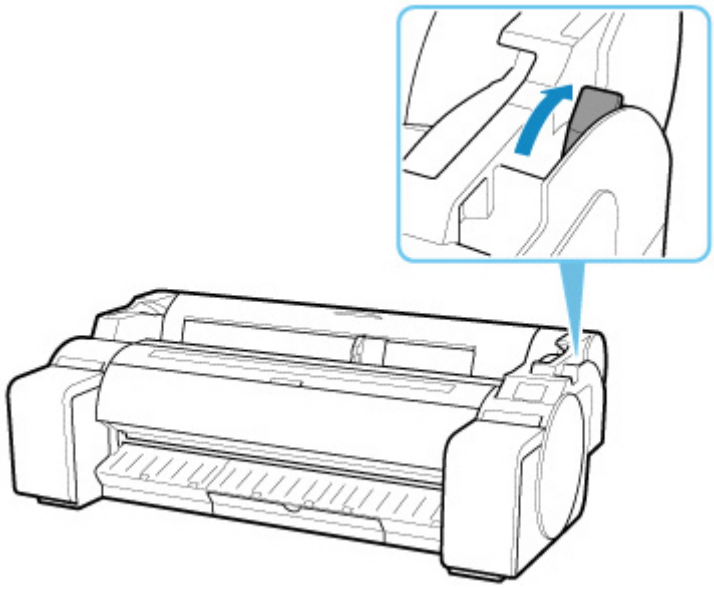

3. Remove jammed paper.

   - If paper is jammed inside the top cover

     1. Open top cover and move carriage to the left or right side manually, away from the jam.

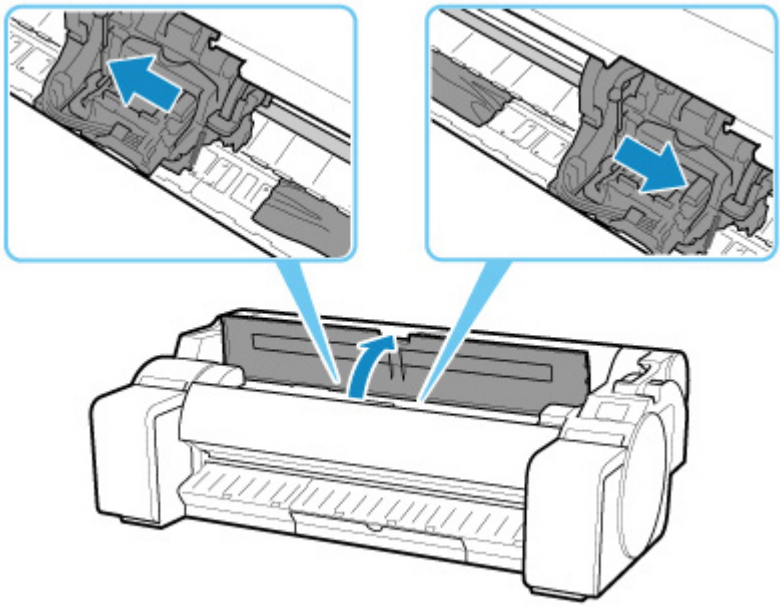

Important

- Do not move the carriage over jammed paper. This may damage the printhead.

2. Remove any jammed paper inside top cover.

   After removing the paper, make sure there are no other scraps of paper in the printer.

3. Close top cover.

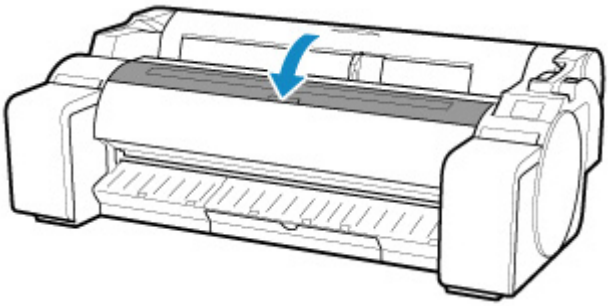

Important

- Do not touch the linear scale (A) or carriage shaft (B). This may stain your hands and damage the printer.

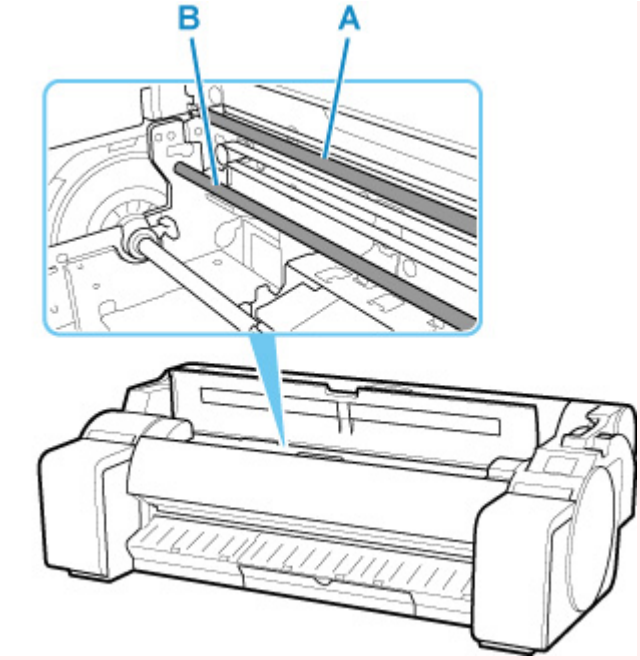

- If the paper is jammed by the paper feed slot

  Remove the jammed paper from the paper feed slot.

  After removing the paper, make sure there are no other scraps of paper in the printer.

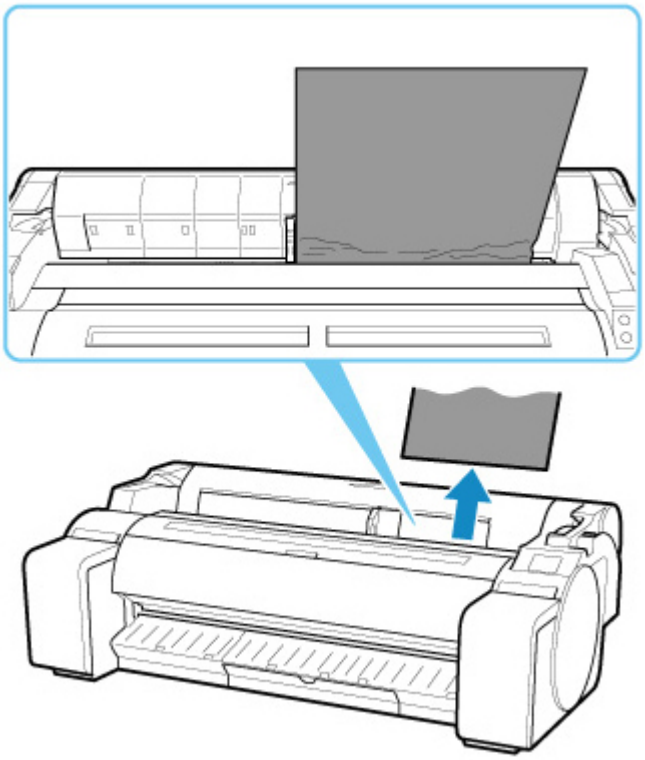

- If the paper is jammed by the ejection guide

  Remove the jammed paper from the output tray.

  After removing the paper, make sure there are no other scraps of paper in the printer.

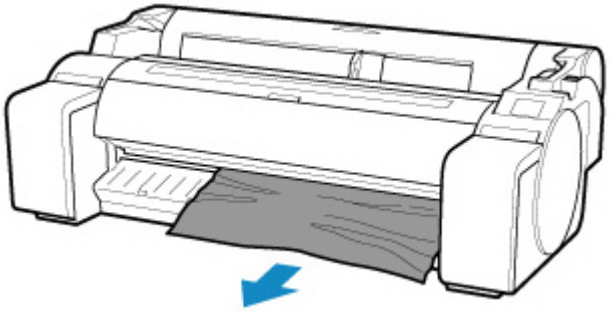

4. Pull release lever forward.

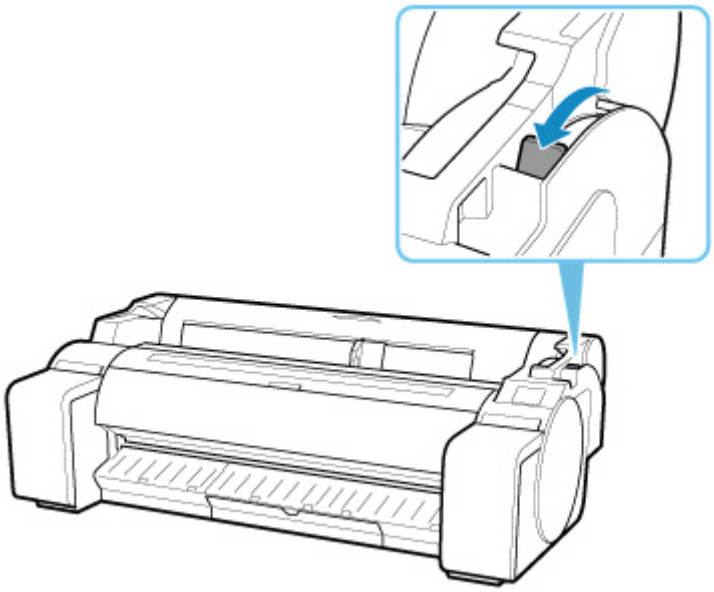

Important

- Changing the release lever position while printing is in progress causes paper jam, misaligned lines, or wrong colors. Be careful not to touch the release lever while printing in progress.

Remove Jammed Paper (Paper Feed Slot)

Follow these steps to remove any scraps left in the paper feed slot after you clear jammed sheets or roll paper.

1. Turn off printer.

   Turning the Printer On and Off

2. Push release lever back.

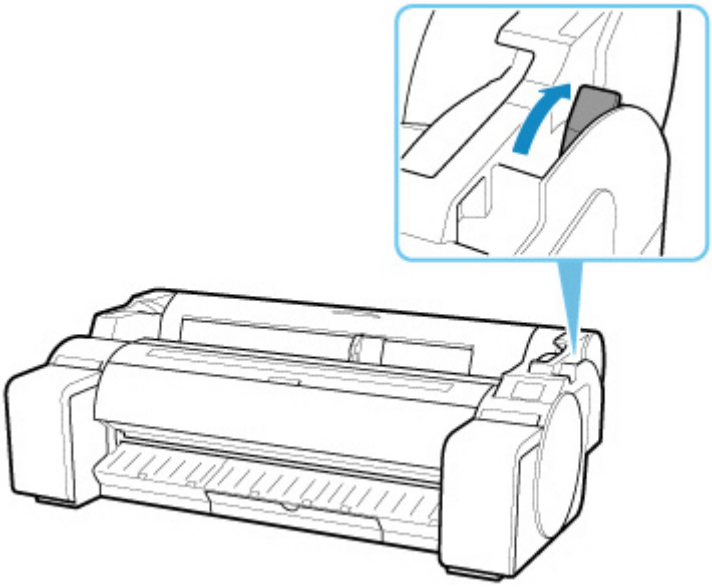

3. Positioning your hands as shown, open the roll paper cover.

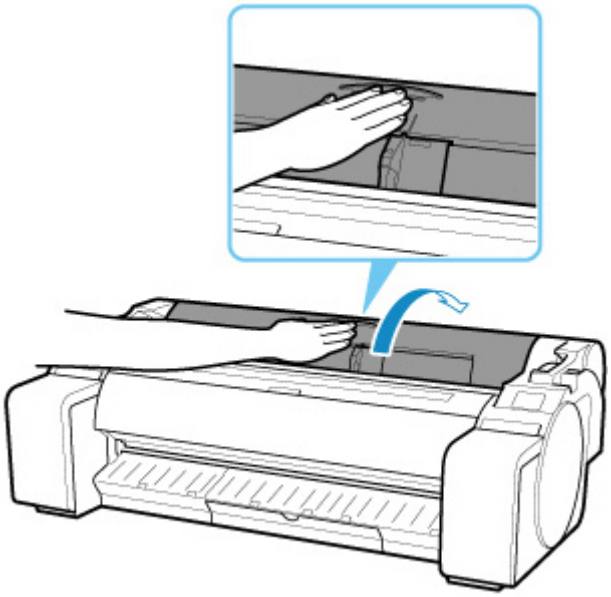

4. Fold an A4 sheet lengthwise four times and insert it through the gap of paper feed slot. Push scrap out toward platen.

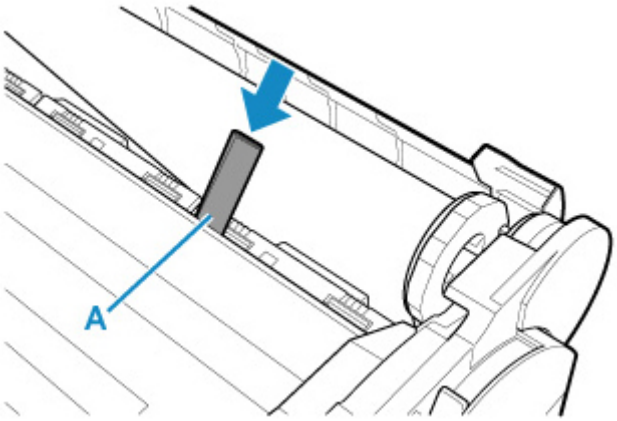

5. Remove scrap when it is pushed out onto platen.

6. If any scraps remain inside paper feed slot, repeat steps 4 and 5.

7. Holding it at the positions indicated, close the roll paper cover.

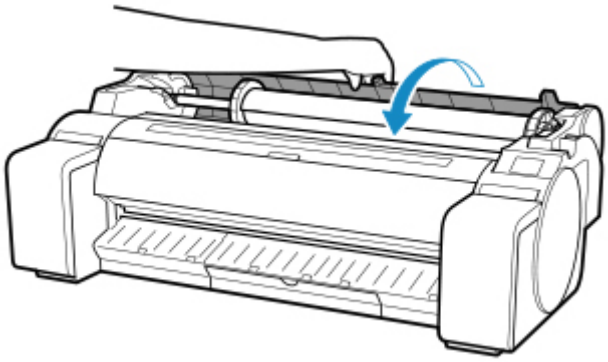

8. Pull release lever forward.

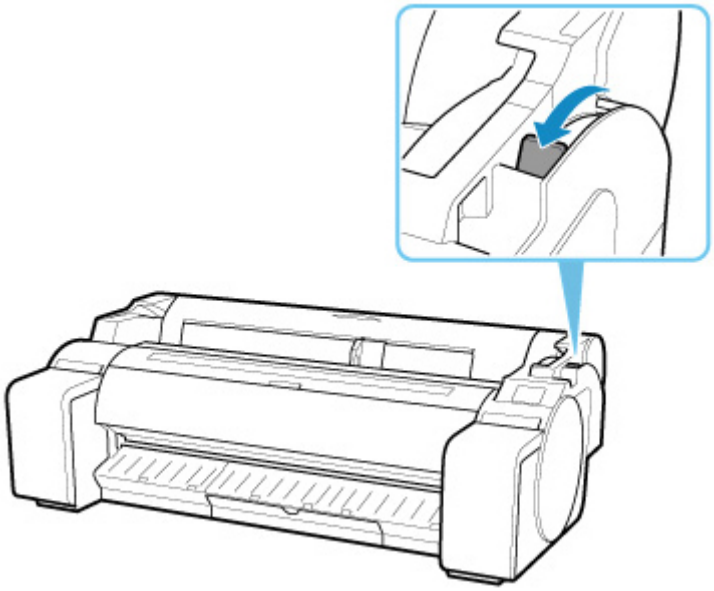

Important

- Changing the release lever position while printing is in progress causes paper jam, misaligned lines, or wrong colors. Be careful not to touch the release lever while printing in progress.

Roll paper cannot be inserted into the Paper Feed Slot

Check 1 Is the roll paper curled?

Straighten out curls and reload the roll.

Check 2 Is paper jammed in the feed slot?

Remove the jammed paper.

- Remove Jammed Roll Paper
- Remove a Jammed Sheet

Check 3 Check the paper information on the HOME screen.

If "Roll" is not displayed, select **Replace roll paper** or **Load roll paper** from the **Select paper** screen, and then load the roll paper.

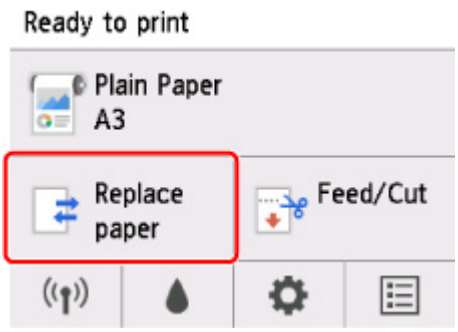

Note

- You cannot load a roll paper and sheets on the printer at the same time.

Roll Paper Remains/Lacks under Quantity Management

Check the setting of **Manage remaining roll amount**.

- If **Barcodes** is selected for **Manage remaining roll amount**:

  1. Enter **Roll paper length** and select **OK**.

  2. Select **Roll amount 3 (standard)** for **Roll amount warning setting**.

- If **Warning message only** is selected for **Manage remaining roll amount**:

  Select **Roll amount 3 (standard)** for **Roll amount warning setting**.

Paper-related settings

Cannot load sheets

Check Check the paper information on the HOME screen.

If "Roll" is displayed, select **Load cut sheet** from the **Select paper** screen, and then load the sheet.

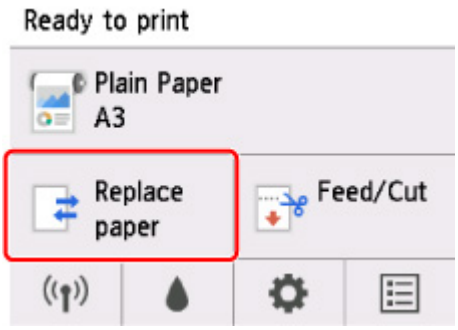

Note

- You cannot load a roll paper and sheets on the printer at the same time.

Paper is not cut straight

Check 1 Is the edge of the paper cutting position creased?

Straighten out any curling by the edges of the paper.

Check 2 Is the edge of the paper cutting position lifting up when cutting?

Reload the paper correctly.

Check 3 Is the paper a type that can be cut with the cutter blade?

Set **Cutting mode** in the touch screen menu to **User cut**, then and cut the roll paper with a cutting implement such as scissors.

- Specifying the Cutting Method for Rolls

Check 4 Are you using the basket properly?

Make sure that you are using the basket properly.

- Using the Basket

Check 5 Check that the **Cut speed** setting is correct.

Select **Paper settings** > **Advanced** on **Paper menu** in the touch screen menu, and change **Cut speed**.

If the paper edge cannot be cut straight at the cut starting position, it may be improved by selecting slower cut speed than that selected currently.

If the paper edge cannot be cut straight at the cut ending position, it may be improved by selecting faster cut speed than that selected currently.

Select **Paper settings** > **Advanced** on **Paper menu** in the touch screen menu, and change the **Cut speed** setting.

- Menu Structure

Check 6 Did the printing material slip diagonally while being cut?

Set the **Cutting mode** in the touch screen menu to **Eject cut**, and then hold and cut the material after it has printed.

- Specifying the Cutting Method for Rolls

Check 7 Is the cutter blade attached properly?

Attach the cutter blade properly.

- Replacing the Cutter Blade

Check 8 Is the edge of the cutter blade blunt?

Replace the cutter blade.

- Replacing the Cutter Blade

Q

Paper is not cut

A

Check 1 Is **Automatic Cutting** in the printer driver set to **No** or **Print Cut Guideline**?

Set the printer driver **Automatic Cutting** setting to **Yes**.

- Page Setup Tab Description (Windows)
- Paper Detailed Settings (macOS)

Check 2 Is **Cutting mode** in the touch screen menu set to **Eject cut** or **User cut**?

If **Cutting mode** is set to **Eject cut**, select **Feed/cut** in the touch screen menu and cut the paper.

If **Cutting mode** is set to **User cut**, cut the roll paper with a cutting implement such as scissors.

- Specifying the Cutting Method for Rolls

Check 3 Is the cutter blade attached?

Attach the cutter blade.

- Replacing the Cutter Blade

Cutter Blade Does Not Work While Cutting Is in Progress

Check 1 Does a message appear on the touch screen?

If the cutter blade failed to cut the paper, it stops moving and a message appears on the touch screen.

Remove the paper and try printing again.

- Remove Jammed Roll Paper

Check 2 Make sure the cutter blade can cut paper used currently.

Select **User cut** for **Cutting mode** in the touch screen menu and cut the roll paper with a cutting implement such as scissors.

- Specifying the Cutting Method for Rolls

Check 3 Check the setting value for **Cut speed**.

Selecting slower value may enable the cutter blade to cut paper.

Select **Paper settings** > **Advanced** on **Paper menu** in the touch screen menu, and change the **Cut speed** setting.

- Menu Structure
- Paper-related settings

Check 4 Is the edge of the cutter blade blunt?

Replace the cutter blade.

- Replacing the Cutter Blade

Dent in the Tip of Paper

Check Are you keeping the roll in the printer for a long time without printing on it?

Doing so may leave a dent on the tip of paper and it remains when you print on the paper the next time.

When printing quality is most important, we recommend cutting the paper tip before printing.

On the HOME screen, selecting **Feed/Cut** > **Cut paper** > **Yes** enables the printer to cut the paper tip at the shortest length.

Menu Structure

The size of clear film cannot be detected

Check Is the platen dirty with ink?

Open the top cover and clean the entire platen area.

- Cleaning Inside the Top Cover

Q

Printer Keeps Ejecting the Roll Paper

A

When a sheet is selected on the HOME screen, loading a roll paper with its surface left loose may make the printer recognize the loaded roll paper as a sheet.

In this case, selecting **Remove paper** on **Paper menu** may allow the printer to keep ejecting the paper.

Check the paper feed settings on the printer.

After roll ejection stops, follow these steps to reload the roll.

1. Push release lever back.

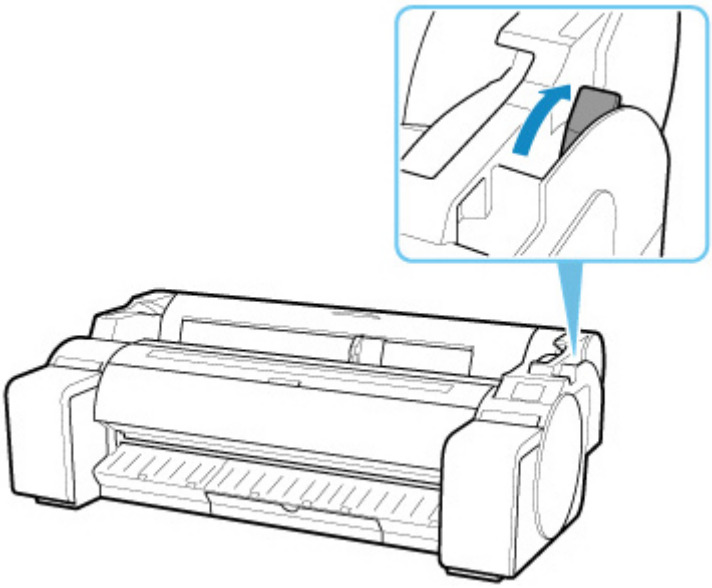

2. Positioning your hands as shown, open the roll paper cover.

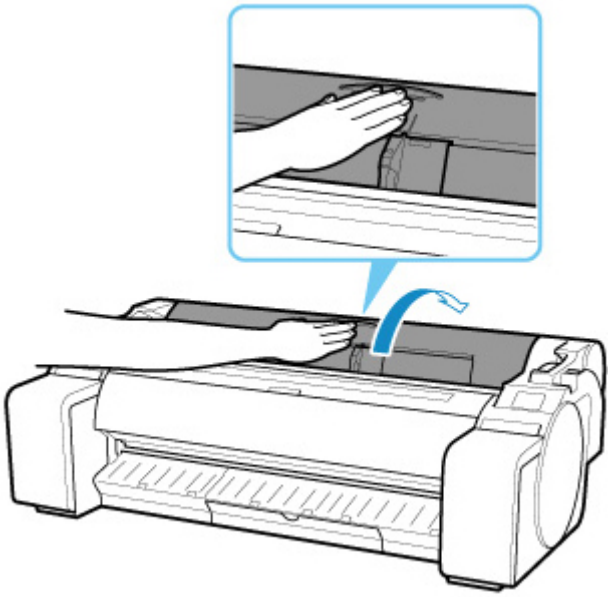

3. Using both hands, rotate the roll holder toward the back to rewind the roll.

   At this time, ensure that both ends of the roll are rewound evenly.

4. Holding it at the positions indicated, close the roll paper cover.

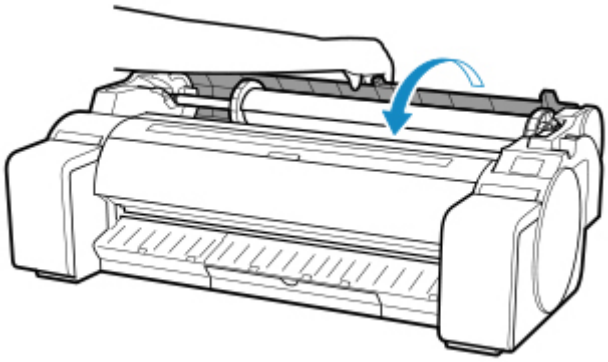

5. Pull release lever forward.

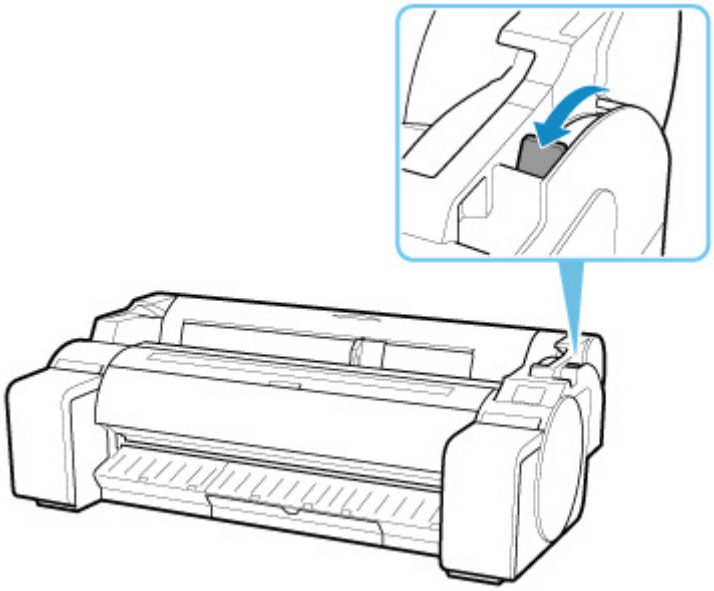

6. Load roll.

At this time, be sure to press the Load button and select **Load roll paper**.

Loading Rolls in the Printer

Margins are wide

Check 1 Is auto cut being used on printed material with a wide margin on the trailing edge only?

Rolls are advanced a specific amount before cutting to prevent problems with cutting and paper ejection.

This operation is normal.

Check 2 Is leading edge detection set to **Do not detect**?

Do not detect may have been set by responding to the message **Do you want to set to detect the leading edge of the paper?** when **Cutting mode** was set to **User cut** in the touch screen menu.

If the message **Do you want to set to detect the leading edge of the paper?** appears when setting **Cutting mode** to **User cut**, select **Detect (recommended)**.

Please note that if **Detect (recommended)** is selected and the paper has a strong curl, the print head may rub against the edge of the paper when printing starts.

Specifying the Cutting Method for Rolls

When printing on roll paper, the printed surface becomes scratched

Make sure the roll paper has not lost tension during printing.

If the roll paper loses tension, the paper surface could be damaged and the paper could wrinkle or fold.

Select **Paper settings** > **Advanced** on **Paper menu** in the touch screen menu, and set **Roll paper tension (printing)** to **High**.

Menu Structure

Note

- Carrying out **Adjust print quality** is recommended when changing **Roll paper tension (printing)** settings.

Printing Does Not Start

- Printer Suddenly Stopped Working for Some Reason
- The Data lamp on the Operation Panel does not light up
- The printer does not respond even if print jobs are sent
- "Preparing the ink system." is displayed
- "Agitating the ink" is displayed

Printer Suddenly Stopped Working for Some Reason

- Cannot Connect to a Printer after Network Configuration Changes
- Cannot Connect to a Printer via Wireless LAN (Wi-Fi)
- Cannot Connect to a Printer through Wireless Direct
- Cannot Connect to a Printer via Wired LAN
- Cannot Print through Network

Q Cannot Connect to a Printer after Network Configuration Changes

A

It may take a while for the computer to obtain an IP address, or you may need to restart your computer.

Make sure the computer has obtained a valid IP address, and try again to find the printer.

Q Cannot Connect to a Printer via Wireless LAN (Wi-Fi)

A

Check1 Check the power status of printer and devices (e.g. wireless router or computer) connected to the network.

Turn on the printer or devices.

If the power is already turned on, turn it off and on again.

It may be necessary to resolve wireless router problems (e.g. update interval of a key, problems of DHCP update interval, energy saving mode, etc.) or to update the wireless router firmware.

For details, contact the manufacturer of your wireless router.

Check2 Can you view any web pages on your computer?

Make sure your computer is connected to the wireless router properly.

For more on checking computer settings or connection status, see the instruction manual supplied with the computer or contact the manufacturer.

Check3 Is the printer connected to the wireless router?

Use the icon on the touch screen to check the connection status between the printer and wireless router. If the icon is not displayed, Wi-Fi is disabled. Turn on wireless communication on the printer.

Check4 Make sure the printer and wireless router network settings match.

Make sure the network settings of the printer (e.g. wireless router name, SSID, network key, etc.) are identical with those of the wireless router.

To check the settings of the wireless router, refer to the instruction manual provided with it or contact its manufacturer.

To check the current network settings of the printer, print out the network setting information.

- Printing Network Settings

Note

- IJ Network Device Setup Utility allows you to diagnose and repair the network status.

  Select the link below to download IJ Network Device Setup Utility and install it.

  - Checking Printer Connection Status Using IJ Network Device Setup Utility

  See below for starting up IJ Network Device Setup Utility.

  - For Windows:
    - Starting Up IJ Network Device Setup Utility
  - For macOS:
    - Starting Up IJ Network Device Setup Utility

Check5 Make sure the printer is not placed too far away from the wireless router.

If the distance between the printer and wireless router is too far, wireless communication becomes poor. Place the printer and wireless router close to each other.

Note

- Though an antenna is attached to most wireless routers, note that some of them have it inside.

Check6 Make sure wireless signal is strong. Monitor signal status and move printer and wireless router as necessary.

Place the printer and wireless router where there are no obstacles between them. Wireless communication between different rooms or floors is generally poor. Wireless communication can be impeded by building materials containing metal or concrete. If the printer cannot communicate with the computer over a Wi-Fi due to a wall, place the printer and the computer in the same room.

In addition, if a device like a microwave oven that emits radio waves of the same frequency bandwidth as a wireless router is nearby, it may cause interference. Place the wireless router as far away from interference sources as possible.

Note

- IJ Network Device Setup Utility allows you to diagnose and repair the network status.

  Select the link below to download IJ Network Device Setup Utility and install it.

  - Checking Printer Connection Status Using IJ Network Device Setup Utility

  See below for starting up IJ Network Device Setup Utility.

  - For Windows:
    - Starting Up IJ Network Device Setup Utility
  - For macOS:
    - Starting Up IJ Network Device Setup Utility

Check7 Make sure of the Wi-Fi channel numbers used for your computer.

You need to have the same Wi-Fi channel number that you are using for the wireless router as your computer. It is normally set in the way that you can use all the Wi-Fi channels. However, when the channels that you are using are restricted, the Wi-Fi channels do not match.

See the instruction manual provided with your computer and check the Wi-Fi channel number available for your computer.

Check8 Make sure channel set on wireless router is a usable channel as confirmed in Check 7.

If it is not, change the channel set on the wireless router.

Check9 Make sure security software's firewall is off.

If your security software's firewall is on, a message may appear warning you that Canon software is attempting to access the network. If this warning message appears, set security software to always allow access.

If you are using any programs that switch between network environments, check their settings. Some programs use a firewall by default.

Check10 If printer is connected to an AirPort Base Station via LAN, make sure you use alphanumeric characters for network identifier (SSID). (macOS)

If the problem is not resolved, redo setup.

- For Windows:

  Perform setup using the Setup CD-ROM or from the web page.

- For macOS:

  Perform setup from the web page.

- **Positioning:**

  Make sure there are no obstacles between the printer and wireless router.

Q Cannot Connect to a Printer through Wireless Direct

A

Check1 Check the power status of printer and other devices (smartphone or tablet).

Turn on the printer or devices.

If the power is already turned on, turn it off and on again.

Check2 Is the icon displayed on the touch screen?

If not, Wireless Direct is disabled. Turn on Wireless Direct.

Check3 Check the settings of your device (smartphone/tablet).

Make sure Wi-Fi is enabled on your device.

For details, refer to your device's instruction manual.

Check4 Make sure printer is selected as connection for device (e.g. smartphone or tablet).

Select the identifier for Wireless Direct (SSID) specified for the printer as the connection destination for devices.

Check the destination on your device.

For details, refer to your device's instruction manual or visit the manufacturer's website.

To check the identifier for wireless direct (SSID) specified for the printer, display it using the operation panel of the printer or print out the network setting information of the printer.

- Display on the touch screen.

  LAN settings

- Print the network settings.

  Printing Network Settings

Check5 Have you entered the proper password specified for the Wireless Direct?

To check the password specified for the printer, display it using the operation panel of the printer or print out the network setting information of the printer.

- Display on the touch screen.

  LAN settings

- Print the network settings.

  Printing Network Settings

Check6 Make sure the printer is not placed too far away from the device.

If the distance between the printer and device is too far, wireless communication becomes poor. Place the printer and device close to each other.

Check7 Make sure 5 devices are already connected.

Wireless Direct does not allow more than 5 devices to be connected.

Q Cannot Connect to a Printer via Wired LAN

A

Check1 Make sure the printer is turned on.

Check2 Make sure the LAN cable is connected properly.

Make sure the printer is connected to the router with the LAN cable. If the LAN cable is loose, connect the cable properly.

If the LAN cable is connected to the WAN side of the router, connect the cable to the LAN side of the router.

If the problem is not resolved, redo setup.

- For Windows:

  Perform setup using the Setup CD-ROM or from the web page.

- For macOS:

  Perform setup from the web page.

Q Cannot Print through Network

A

Check1 Make sure the computer is connected to the wireless router.

For more on how to check the computer settings or connection status, see your computer instruction manual or contact its manufacturer.

Check2 If the printer driver is not installed, install it. (Windows)

Install the printer driver using the Setup CD-ROM or install it from the Canon website.

Check3 When using Wi-Fi, make sure wireless router does not restrict which computers can access it.

For more on connecting to and setting up your wireless router, see the wireless router instruction manual or contact its manufacturer.

The Data lamp on the Operation Panel does not light up

Check 1 Does the printer have power?

Check that the power cord is firmly plugged all the way in. Push the **ON** button to turn on the power to the printer.

Check 2 Was the correct printer selected?

In Windows, select the printer by clicking **Select Printer** or **Printer** in the printing dialog box and try printing again.

In macOS, open the dialog box of the printer driver, select the printer from the list of **Printer**, and try printing again.

Check 3 Is the print job paused?

In Windows, restart the print job as follows.

1. Select the printer icon in the **Printers and Faxes** (or **Printers**) window.
2. Clear **Pause Printing** in the **File** menu to restart the print job.

In macOS, restart the print job as follows.

1. Click **Print & Scan** (or **Print & Fax**).
2. Select the printer, and then **Resume Printer** (or **Start Jobs**) in the **Printers** menu to restart the print job.

Q

The printer does not respond even if print jobs are sent

A

Check 1 Is **Pause printing** set to **Enable**?

Set **Pause printing** on the touch screen menu to **Disable**.

Pausing Printing

Check 2 Is USB or LAN connection disabled?

- For USB connection:

  Set **Use USB connection** on the touch screen menu to **Use**.

- For LAN connection (wired/Wi-Fi/Wireless Direct):

  Set **Enable/disable Wired LAN**, **Enable/disable Wi-Fi**, or **Enable/disable Wireless Direct** on the touch screen menu to **Enable**.

  Note

  - You cannot enable wired LAN and Wi-Fi or Wireless Direct at the same time.

"Preparing the ink system." is displayed

The print head and sub-ink tank are being filled with ink.

Wait until the system has been filled with ink.

Note

- This message might appear if you force the power off while the printer is operating.

  Always follow the correct procedure when turning off the power.

  Turning the Printer On and Off

"Agitating the ink" is displayed

Ink agitation is in progress.

Please wait until ink agitation is finished.

Agitation time varies depending on time elapsed since powering off (approximately 20 seconds to 2 minutes).

The Printer Stops During a Print Job

- Printing stops and an error message is displayed
- The printer ejects blank, unprinted paper

Printing stops and an error message is displayed

The last portion of roll paper was used during a print job, and paper could not be advanced because the trailing edge is taped to the roll.

Remove the used roll and insert a new roll.

- Removing the Roll from the Printer
- Removing Rolls From the Roll Holder
- Loading and Printing on Rolls

The printer ejects blank, unprinted paper

Check 1 The leading edge of the roll paper may have been trimmed

The leading edge of the roll paper may be trimmed if **Trim edge first** is not set to **Off** or **Manual** in the touch screen menu.

- Cutting the Leading Edge of Roll Paper Automatically

Check 2 Is the print head nozzle blocked?

Print a nozzle check pattern to check the print head status.

- Checking for Nozzle Clogging

Check 3 Is the correct printer driver selected?

Print again using the correct printer driver for your printer.

Check 4 When you print data including HP RTL command, check the settings below in the touch screen menu.

- Set **Auto rotation** to **OFF**.
- If **Rotate** is set to **90 degrees**, select **0 degrees** and start printing.

- Menu Structure

If none of the above apply, there may be a printer malfunction.

Contact your Canon dealer for assistance.

Problems with the Printing Quality

- Printing is faint
- Paper rubs against the Print Head
- The edges of the paper are dirty
- The surface of the paper is dirty
- The back side of the paper is dirty
- Immediately after borderless printing, the trailing edge margin is soiled during regular printing
- Printed colors are inaccurate
- Banding in different colors occurs
- Colors in printed images are uneven
- Image edges are blurred or white banding occurs
- The contrast becomes uneven during printing
- The length of printed images is inaccurate in the feeding direction
- Images are printed crooked
- Documents are printed in monochrome
- Line thickness is not uniform
- Lines or colors are misaligned
- Borders appear in borderless printing

Q

Printing is faint

A

Check 1 Is the reverse side of the paper being used for printing?

Print on the printing surface.

Check 2 Is the print head nozzle blocked?

Print a test pattern to check the nozzles and see if they are clogged.

- Checking for Nozzle Clogging

Note

- To automatically check for nozzle blockages after printing, set **Auto nozzle check** in the touch screen menu to a setting other than **Disable**.

  To show warnings based on nozzle check results, set **Nozzle check error display** in the touch screen menu to **Enable**.

  However, printing may be stopped by warnings if this setting is set to **Enable**.

  - Menu Structure

Check 3 Was the printer left with the ink tank out?

The ink supply may become blocked by ink if the ink tank is left out.

If this happens, leave the printer for at least 24 hours with the ink tank in, and then carry out **Print head cleaning**.

- Cleaning the Print Head

Check 4 Are paper scraps stuck in the top cover?

Follow the steps below to remove paper scraps left inside the top cover.

1. Open the top cover and make sure that the carriage is not over the platen.
2. Remove any paper scraps left inside the top cover.

   - Remove Jammed Roll Paper
   - Remove a Jammed Sheet

3. Close the top cover.

Check 5 Was the paper cut before the ink dried?

Set a longer **Ink drying wait time** in **Advanced paper settings** in the touch screen menu.

- Menu Structure

Check 6 Is the printer driver **Print Quality** set to **Fast**?

Follow the steps below to set **Print Quality** to a setting other than **Fast**, and then print.

- Windows

  Change the **Print Quality** settings in the printer driver **Advanced Settings**.

  Changing the Print Quality and Correcting Image Data (Windows)

- macOS

  Change the **Print Quality** in the printer driver **Quality & Media** settings.

  Changing the Print Quality and Correcting Image Data (macOS)

If a setting lower than **Standard** is selected, the printing time is shorter and less ink is used though the print quality is reduced. If a printing looks faint, select a setting higher than **Standard**.

Check 7 Does the paper used for printing create a lot of cutting dust?

Set **Cut-dust reduction** in the touch screen menu **Advanced paper settings** to **ON**.

Reducing Dust from Cutting Rolls

Paper rubs against the Print Head

Check 1 Is the media type specified in the printer driver the same as the media type loaded in the printer?

Load paper of the same type as you have specified in the printer driver.

- Loading Rolls in the Printer
- Loading Sheets in the Printer

Follow the steps below to match the media type in the printer driver to the media type loaded in the printer.

1. To stop printing, press the **Stop** button.
2. Change the paper type in the printer driver and try printing again.

Check 2 Is the paper loaded properly?

If not loaded properly, paper can buckle and rub against the print head.

Reload the paper.

- Loading Rolls in the Printer
- Loading Sheets in the Printer

Check 3 Is the print head height set too low?

Set **Paper Thickness (Head Height)** in the touch screen menu to **Auto**.

- Troubleshooting Paper Abrasion and Blurry Images

Check 4 Is the paper thick, or a type that curls easily or is prone to buckling after absorbing ink?

If using paper-based printing material such as Heavyweight Coated Paper, set **Transport unit vacuum strength** in the touch screen menu to **Medium-strong** or **Strong**.

If that does not resolve the problem, increase the **Paper Thickness (Head Height)** setting in the touch screen menu.

- Adjusting Vacuum Strength
- Troubleshooting Paper Abrasion and Blurry Images

If using film-based printing material such as CAD Tracing Paper, set the **Transport unit vacuum strength** in the touch screen menu to **Standard**, **Medium-strong**, or **Strong**.

If that does not resolve the problem, increase the **Paper Thickness (Head Height)** setting in the touch screen menu.

- Adjusting Vacuum Strength
- Troubleshooting Paper Abrasion and Blurry Images

If using paper thinner than 0.004 inches (0.1 mm), set **Transport unit vacuum strength** in the touch screen menu to **Weak**.

If that does not resolve the problem, increase the **Paper Thickness (Head Height)** setting in the touch screen menu.

- Adjusting Vacuum Strength
- Troubleshooting Paper Abrasion and Blurry Images

Check 5 When loading paper in the printer, is the media loaded the same as the media type selected on the touch screen?

Select the correct media type in the touch screen menu when loading paper in the printer.

- Loading Rolls in the Printer
- Loading Sheets in the Printer

Check 6 Does the paper have a strong curl at the front edge or is it buckled?

Set **Cutting mode** in the touch screen menu to **User cut**, and set leading edge detection to **Do not detect**.

To keep track of the amount of roll paper remaining in this situation, set **Manage remaining roll amount** to **OFF** before loading the roll paper, and then set **Manage remaining roll amount** back to **ON** after the roll paper is loaded.

- Specifying the Cutting Method for Rolls
- Keeping Track of the Amount of Roll Paper Left

The edges of the paper are dirty

Check 1 Was printing borderless or on small paper?

The platen may become dirtied by printing borderless or on small paper sizes.

Open the top cover and clean the platen.

- Cleaning Inside the Top Cover

Check 2 Is **Extension for borderless printing** in the touch screen menu set to **Large** or **Standard**?

Set **Paper with recommended width** in **Extension for borderless printing** to **Small**.

- Menu Structure

Check 3 Is the media type specified in the printer driver the same as the media type in the printer?

Make sure the same type of paper is specified on the printer as in the printer driver.

- Changing the Type of Paper

Follow the steps below to change the printer driver settings.

1. To stop printing, press the **Stop** button.
2. Change the type of paper in the printer driver and try printing again.

Check 4 Is the paper creased or curled?

Straighten out the wrinkles or curls and reload the paper. Do not use paper that has been printed on previously.

- Loading Rolls in the Printer
- Loading Sheets in the Printer

Check 5 Is **Cut-dust reduction** in the touch screen menu **Advanced paper settings** set to **ON**?

A cut dust reduction line is printed at the paper cut position when **Cut-dust reduction** is set to **ON**.

If cutting dust reduction is not required, set **Cut-dust reduction** to **OFF**.

- Menu Structure

Check 6 Is the print head height set too low in the touch screen menu?

Set **Paper Thickness (Head Height)** to **Auto**.

- Troubleshooting Paper Abrasion and Blurry Images

Check 7 Is the paper thick, or a type that curls easily or is prone to buckling after absorbing ink?

If using paper-based printing material such as thick-coat paper, set **Transport unit vacuum strength** in the touch screen menu to **Medium-strong** or **Strong**.

If that does not resolve the problem, increase the **Paper Thickness (Head Height)** setting in the touch screen menu.

- Adjusting Vacuum Strength
- Troubleshooting Paper Abrasion and Blurry Images

If using film-based printing material such as tracing paper, set the **Transport unit vacuum strength** in the touch screen menu to **Standard**, **Medium-strong**, or **Strong**.

If that does not resolve the problem, increase the **Paper Thickness (Head Height)** setting in the touch screen menu.

- Adjusting Vacuum Strength
- Troubleshooting Paper Abrasion and Blurry Images

Check 8 Is the output guide clean?

Clean the output guide.

- Cleaning the Printer Exterior

The surface of the paper is dirty

Check 1 Is the paper retainer clean?

Clean the paper retainer.

Cleaning Inside the Top Cover

Check 2 Does this paper take longer to dry?

Set the **Pause between pages** in the touch screen menu to approximately **1 minute**.

Menu Structure

Note

- When printing on paper that takes longer to dry, the paper may curl during printing and come in contact with the output slot.

  In such situations, set an **Ink drying wait time** and an **Ink drying target area** for **Pause between scans** in the touch screen menu.

  However, note that printing will now take longer.

  Menu Structure

Note

- In a hot and humid environment, rolling paper printed with images containing areas of saturated color may transfer ink to the contact surface, affecting print quality.

  Move the printer to a different environment, or let the paper dry before rolling it.

The back side of the paper is dirty

A

Check 1 Was the previous print job borderless, or printed on small paper?

Open the top cover and clean the platen.

- Cleaning Inside the Top Cover

Check 2 Is **Detect paper width** in the touch screen menu set to **OFF**?

Printing with **Detect paper width** set to **OFF** may cause the platen to be dirtied.

Set **Detect paper width** in the touch screen menu to **ON**, and then open the top cover and clean the platen.

- Cleaning Inside the Top Cover

To continue printing with **Detect paper width** set to **OFF**, first open the top cover and clean the platen, and then manually feed roll paper over the platen when printing.

- Cleaning Inside the Top Cover
- Feeding Roll Paper Manually

Check 3 Paper may be gripped weakly over the platen.

Set a higher **Transport unit vacuum strength** in the touch screen menu.

- Adjusting Vacuum Strength

Check 4 Is **Extension for borderless printing** in the touch screen menu set to **Large** or **Standard**?

Set **Paper with recommended width** in **Extension for borderless printing** to **Small**.

- Menu Structure

Note

- In a hot and humid environment, rolling paper printed with images containing areas of saturated color may transfer ink to the contact surface, affecting print quality.

  Move the printer to a different environment, or let the paper dry before rolling it.

Immediately after borderless printing, the trailing edge margin is soiled during regular printing

In some situations, borderless printing with automatic cutting of the leading and trailing edges on roll paper may transfer ink on the cutter blade to the next item printed.

Follow the steps below to change **Between Pages** in **Drying Time** to between 30 seconds and 3 minutes and perform borderless printing.

- Windows

  1. Click **Specify** for **Media Type** on the **Main** sheet of the printer driver.

  2. Select an ink drying time from the **Between Pages** list in **Drying Time**.

- macOS

  Select an ink drying time from the **Drying Time** list on the **Paper Detailed Settings** sheet of the printer driver.

Q

Printed colors are inaccurate

A

Check 1 Has color been adjusted in the printer driver?

Follow the steps below to adjust color settings.

- Windows

  Adjust the color settings with **Color Mode** > **Color Settings** in **Advanced Settings** in the printer driver.

  Main Tab Description (Windows)

- macOS

  Adjust the color settings in the printer driver **Color Options**.

  Color Options (macOS)

Check 2 Has the computer or monitor color been adjusted?

Take the actions below.

- Refer to the computer and monitor documentation to adjust the colors.
- Adjust the settings of the color management software, referring to the software documentation as needed.

Check 3 Is the print head nozzle blocked?

Print a test pattern to check the nozzles and see if they are clogged.

Checking for Nozzle Clogging

Check 4 Is **Application Color Matching Priority** set to **Off** in a Windows printer driver?

In the printer driver **Layout** sheet, click **Special Settings**, and then set **Application Color Matching Priority** to **On** in the dialog box that appears.

Layout Tab Description (Windows)

Q

Banding in different colors occurs

A

Check 1 Are paper actually loaded on the printer and the media type selected on the touch screen the same?

Select the correct media type in the touch screen menu when loading paper in the printer.

- Loading Rolls in the Printer
- Loading Sheets in the Printer

Check 2 Has the paper feed rate been calibrated properly?

Adjust the feed amount.

- Adjusting Feed Amount

Check 3 Print job may have been interrupted while receiving, and therefore not printed at a fast frame rate

Exit other applications and cancel other print jobs.

Check 4 Is **Set priority** in the touch screen menu set to **Prioritize length accuracy**?

Setting **Set priority** to **Prioritize print quality** and adjusting the feed amount can help.

- Adjusting Feed Amount

Check 5 Check if the print head is in the right position

Adjust the print head position.

- Automatic Adjustment to Straighten Lines and Colors

Check 6 Make sure that the print head nozzle is not blocked

Print a test pattern to check the nozzles and see if they are clogged.

- Checking for Nozzle Clogging

Note

- To automatically check for nozzle blockages after printing, set **Auto nozzle check** in the touch screen menu to a setting other than **Disable**.

  To show warnings based on nozzle check results, set **Nozzle check error display** in the touch screen menu to **Enable**.

  However, printing may be stopped by warnings if this setting is set to **Enable**.

  - Menu Structure

Check 7 Low **Print Quality** setting causing lines in the printing

Follow the steps below to set **Print Quality** to **High**, and then print.

- Windows

  Change the **Print Quality** settings in the printer driver **Advanced Settings**.

  Changing the Print Quality and Correcting Image Data (Windows)

- macOS

  Change the **Print Quality** in the printer driver **Quality & Media** settings.

  Changing the Print Quality and Correcting Image Data (macOS)

If a setting higher than **Standard** is selected, the printing time is longer and more ink is used.

Check 8 Is the media type specified in the printer driver the same as the media type loaded in the printer?

Load paper of the same type as you have specified in the printer driver.

Loading Rolls in the Printer
Loading Sheets in the Printer

Follow the steps below to change the printer driver settings.

1. To stop printing, press the **Stop** button.
2. Change the type of paper in the printer driver and try printing again.

Q

Colors in printed images are uneven

A

Check 1 Does this paper curl easily?

Colors in printed images may be uneven at the leading edge of paper that curls easily. Change the **Transport unit vacuum strength** in the touch screen to increase the grip on the paper, or set a margin of at least 0.8 inches (20 mm) at the front edge of the paper.

- Adjusting Vacuum Strength

Check 2 Make sure you are not printing with AirPrint. (macOS)

Select a printer to use on **Printers & Scanners** under **System Preferences**.

If "...AirPrint" is included in the printer name shown on **Kind**, you are using the printer with AirPrint. In this case, install the CUPS driver and perform printing using the CUPS driver.

Check 3 Colors in printed images may be uneven if the **Print Quality** setting is too low

If using Windows, select **Advanced Settings** from the **Main** tab of the printer driver, and then select a higher **Print Quality** setting.

If using macOS, select **Quality & Media** in the printer driver, and then select a higher **Print Quality** setting.

When **Fast** or **Standard** is selected, the printing time is shorter and less ink is used than with **High**, but the print quality is reduced.

- Changing the Print Quality and Correcting Image Data (Windows)
- Changing the Print Quality and Correcting Image Data (macOS)

Check 4 Colors in printed images may be uneven on the boundary between shades if there are dark and light areas in an image

Using the unidirectional printing function may reduce color unevenness in this situation.

Follow the steps below for unidirectional printing.

- Windows

  Open **Paper Detailed Settings** from the **Main** tab of the printer driver, and then select **Unidirectional Printing**.

- macOS

  Open **Paper Detailed Settings** in the printer driver, and then select **Unidirectional Printing**.

Check 5 If printing borderless, colors in printed images may be a little uneven at the leading edge of the paper because printing is interrupted to cut the paper

Set the printer driver **Automatic Cutting** settings to **No**, and then print. Doing this prints only the left and right sides borderless. Cut the top and bottom borders with a cutting implement such as scissors after the printed materials are output and cut.

Note

- Selecting a higher **Print Quality** in the printer driver **Advanced Settings** may resolve the problem.
  - Changing the Print Quality and Correcting Image Data (Windows)
  - Changing the Print Quality and Correcting Image Data (macOS)

Check 6 Check if the print head is in the right position

Adjust the print head position.

- Automatic Adjustment to Straighten Lines and Colors

Check 7 Color may be uneven if printing materials were stacked while drying

To avoid uneven colors, we recommend drying each sheet separately.

Check 8 Density may be uneven if using Glossy Paper or Coated Paper

Set **Print Quality** to **High**, and then print.

Check 9 Is the media type specified in the printer driver the same as the media type loaded in the printer?

Load paper of the same type as you have specified in the printer driver.

- Loading Rolls in the Printer
- Loading Sheets in the Printer

Follow the steps below to match the media type in the printer driver to the media type loaded in the printer.

1. To stop printing, press the **Stop** button.
2. Change the type of paper in the printer driver and try printing again.

Check 10 Is **Ink drying target area** for **Pause between scans** in the touch screen menu set to **Leading edge**?

If the **Ink drying target area** for **Pause between scans** is set to **Leading edge**, color may be uneven approximately 3.1 to 5.1 inches (80 to 130 mm) from the front edge of the paper. (The position depends on the **Print Quality** settings)

In this case, set **Ink drying target area** for **Pause between scans** to **Overall**.

However, note that printing will now take longer.

- Menu Structure

Image edges are blurred or white banding occurs

Check 1 Paper may be gripped too strongly over the platen.

Set a lower **Transport unit vacuum strength** in the touch screen menu.

- Adjusting Vacuum Strength

Check 2 Check if the print head is in the right position.

For detailed printing of small text or fine lines on glossy or semi-gloss photo paper or proof paper, etc., set the print head to the optimal height and then adjust the position of the print head.

- Adjusting the Print Head

Setting a lower value for **Paper Thickness (Head Height)** in the touch screen menu may resolve the problem.

- Troubleshooting Paper Abrasion and Blurry Images

Check 3 Is the media type specified in the printer driver the same as the media type loaded in the printer?

Load the printer with the media type specified in the printer driver.

- Loading Rolls in the Printer
- Loading Sheets in the Printer

Follow the steps below to match the media type in the printer driver to the media type loaded in the printer.

1. To stop printing, press the **Stop** button.
2. Reset the media type in the printer driver, and then print.

The contrast becomes uneven during printing

Check 1 Has the paper feed rate been calibrated properly?

Adjust the feed amount.

- Adjusting Feed Amount

Check 2 Is the media type specified in the printer driver the same as the media type loaded in the printer?

Load the printer with the media type specified in the printer driver.

- Loading Rolls in the Printer
- Loading Sheets in the Printer

Follow the steps below to match the media type in the printer driver to the media type loaded in the printer.

1. To stop printing, press the **Stop** button.
2. Change the type of paper in the printer driver and try printing again.

Check 3 Has the print head position been calibrated properly?

Adjust the print head position.

- Automatic Adjustment to Straighten Lines and Colors

The length of printed images is inaccurate in the feeding direction

Check 1 Is **Set priority** for **Paper feed adjustment** in the touch screen menu set to **Prioritize print quality**?

Set **Set priority** for **Paper feed adjustment** to **Prioritize length accuracy**, and then carry out **Adjust feed length**.

- Adjusting Feed Amount

Check 2 Is the media type specified in the printer driver the same as the media type loaded in the printer?

Load the printer with the media type specified in the printer driver.

- Loading Rolls in the Printer
- Loading Sheets in the Printer

Follow the steps below to match the media type in the printer driver to the media type loaded in the printer.

1. To stop printing, press the **Stop** button.
2. Reset the media type in the printer driver, and then print.

Q

Images are printed crooked

A

Check 1 Is **Skew detection accuracy** in the touch screen menu set to **Loose** or **OFF**?

Set **Skew detection accuracy** to **Standard**, and then reload the paper.

- Menu Structure

Check 2 Is **Detect paper width** set to **OFF**?

Set **Detect paper width** in the touch screen menu to **ON**.

- Menu Structure

Check 3 Has the roll paper been loaded at an angle?

If there is a gap between the roll paper and roll holder, reload the roll.

- Loading Rolls on the Roll Holder
- Loading Rolls in the Printer

Documents are printed in monochrome

A

Check 1 Is **Color Mode** set to **Monochrome** in the printer driver?

- For Windows

  In the **Advanced Settings** of the printer driver, specify **Color** in **Color Mode** and try printing again.

- For macOS

  In the **Quality & Media** of the printer driver, specify **Color** in **Color Mode** and try printing again.

Check 2 The print head nozzle may be blocked.

Print a test pattern to check the color ink nozzles and see if they are clogged.

Checking for Nozzle Clogging

Q

Line thickness is not uniform

A

Check 1 Is **Fast Graphic Process** set to **On** in the Windows printer driver **Special Settings** dialog box?

Access the printer driver **Properties** dialog box from **Print** in the **File** menu of the source application, and follow these steps to print.

1. Deselect **Preview before printing** in the **Main** sheet.
2. Deselect **Page Layout** in the **Layout** sheet.
3. Click the **Special Settings** button in the **Layout** sheet, and then set **Fast Graphic Process** to **Off** in the **Special Settings** dialog box that opens.

Check 2 Is the media type specified in the printer driver the same as the media type loaded in the printer?

Load the printer with the media type specified in the printer driver.

- Loading Rolls in the Printer
- Loading Sheets in the Printer

Follow the steps below to match the media type in the printer driver to the media type loaded in the printer.

1. To stop printing, press the **Stop** button.
2. Reset the media type in the printer driver, and then print.

Check 3 Adjust the position of the print head

For detailed printing of small text or fine lines on glossy or semi-gloss photo paper or proof paper, etc., set the print head to the optimal height and then adjust the position of the print head.

- Adjusting the Print Head

Note

- Setting a lower value for **Paper Thickness (Head Height)** in the touch screen menu may resolve the problem.
  - Troubleshooting Paper Abrasion and Blurry Images

Lines or colors are misaligned

Check 1 Adjust the position of the print head

If borders are misaligned or the print results are not uniform, adjust the position of the print head.

- Adjusting the Print Head

For detailed printing of small text or fine lines on glossy or semi-gloss photo paper or proof paper, etc., set the print head to the optimal height and then adjust the position of the print head.

- Changing the Print Quality and Correcting Image Data (Windows)
- Changing the Print Quality and Correcting Image Data (macOS)

Note

- Setting a lower value for **Paper Thickness (Head Height)** in the touch screen menu may resolve the problem.
  - Troubleshooting Paper Abrasion and Blurry Images

Check 2 Is the media type specified in the printer driver the same as the media type loaded in the printer?

Load the printer with the media type specified in the printer driver.

- Loading Rolls in the Printer
- Loading Sheets in the Printer

Follow the steps below to match the media type in the printer driver to the media type loaded in the printer.

1. To stop printing, press the **Stop** button.
2. Reset the media type in the printer driver, and then print.

Check 3 Perform print head angle alignment.

Select **Print head angle adjustment** in the touch screen menu to align the print head angle.

- Adjusting Line Misalignment

Important

- Changing the release lever position while printing is in progress causes paper jam, misaligned lines, or wrong colors. Be careful not to touch the release lever while printing in progress.

Borders appear in borderless printing

Check 1 If printing full-scale borderless, is the selected paper wider than the source size?

For borderless printing at actual size, use roll paper that has the same width as the actual page size.

- Printing Full-Size without Margins (Windows)
- Printing Full-Size without Margins (macOS)

Check 2 Does the source file have margins?

Check that the printing image data does not have any objects like crop marks and transparent objects.

Check 3 Is a margin set in application software?

Check that no margins are configured in the application software you are using.

Check 4 Is the **Extension for borderless printing** set to **Small**?

In **Extension for borderless printing** in the touch screen menu, set **Paper with recommended width** and **Paper with adequate width** to **Standard**.

- Menu Structure

Check 5 Is the width of the paper recommended for borderless printing?

For paper sizes that are not recommended for borderless printing, a slight margin will automatically be generated on the left and right.

You can set the amount of border at this time with **Extension for borderless printing** > **Paper with adequate width** in the touch screen menu.

However, **Extension for borderless printing** is increased, the platen may become dirty.

For details on paper sizes recommended for borderless printing, see Paper Sizes.

- Paper Sizes

Cannot Print over Network

- Cannot Connect Printer to Network
- Cannot Print over TCP/IP Network
- Cannot Print over Bonjour networks

Cannot Connect Printer to Network

Check1 Is the Ethernet cable connected correctly to the printer's wired LAN connector?

Make sure the printer is connected to the network with the correct Ethernet cable, and then turn the printer on. For instructions on connecting the cable, refer to the Setup Guide.

Check2 Make sure the Link indicator is lit.

The left and right indicators are lit if the printer is connected via 1000Base-T.

The left indicator is green if the printer is connected via 100Base-TX, and the right indicator is orange if connected via 10Base-T.

If the Link indicator is not lit, check the following points.

- The hub is on.
- The end of the Ethernet cable is connected correctly.

  Insert the Ethernet cable until it clicks and locks in place.
- There is no problem with the Ethernet cable.

  If there is any problem, replace the Ethernet cable.

Cannot Print over TCP/IP Network

Check1 Is the printer's IP address configured correctly?

Make sure the printer's IP address is configured correctly.

Note

- For Windows, you can configure the printer's IP address using IJ Network Device Setup Utility.
  - For wired LAN:
    - Performing/Changing Wired LAN Connection (Ethernet Cable) Settings
  - For Wi-Fi:
    - Performing/Changing Wi-Fi Settings

Check2 Are the printer's TCP/IP network settings configured correctly?

Make sure the printer's TCP/IP network settings are configured correctly.

Check3 Is the computer you are trying to print from configured correctly?

Make sure the computer's TCP/IP network settings are configured correctly.

Cannot Print over Bonjour networks

Check1 Is the computer you are trying to print from configured correctly?

Make sure the computer is configured correctly.

Check2 Are the computer and printer on the same network?

Due to the nature of Bonjour, printing may not be possible if the printer is on another network behind a router. Make sure the computer and printer are on the same network. For information about network settings, ask your network administrator.

Check3 Are the printer's Bonjour settings configured correctly?

Make sure the Bonjour settings are configured correctly.

Cannot Find Printer on Network

- Cannot Find Printer on Check Printer Settings Screen (Windows)
- Cannot Proceed beyond Printer Connection Screen/Connect Cable Screen
- Searching Printer by IP Address or Host Name During Setup
- Cannot Find Printer while Using Wi-Fi
- Cannot Find Printer while Using Wired LAN
- Cannot Print Using AirPrint

Cannot Find Printer on Check Printer Settings Screen (Windows)

If the printer cannot be found and the **Check Printer Settings** screen appears after searching the printer by **Automatic search** on the **Search for Printers** screen, click **Redetect** and search for the printer again by the IP address on the **Search for Printers** screen.

If the printer has not been found after searching it by the IP address, check network settings.

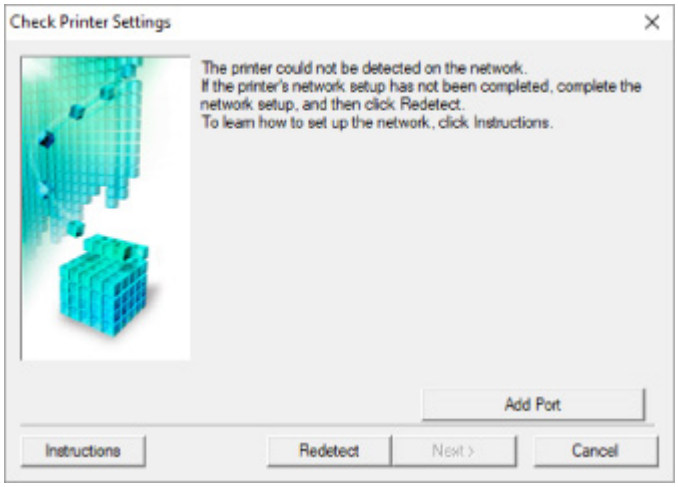

Q

Cannot Proceed beyond Printer Connection Screen/Connect Cable Screen

A

If you cannot proceed beyond the **Printer Connection** screen or the **Connect Cable** screen, check the following.

Check1 Make sure USB cable is securely plugged in to printer and computer.

Connect the printer and the computer using a USB cable as the illustration below. The USB port is located at the right side of the printer.

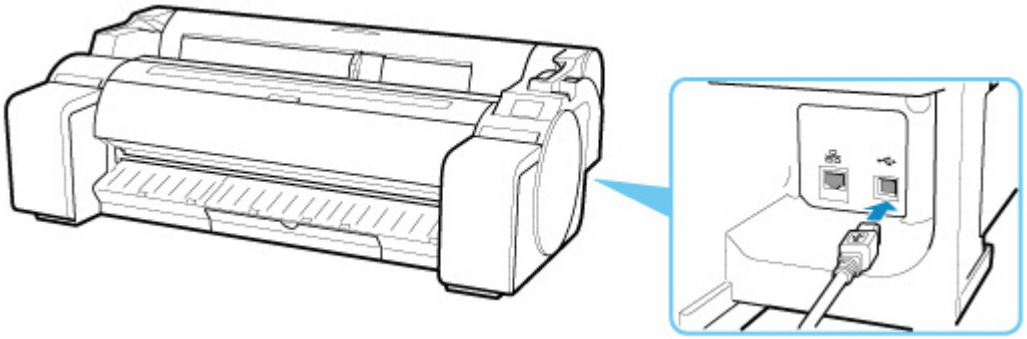

Check the items below only if you cannot proceed beyond the Printer Connection screen.

Check2 Follow procedure below to connect printer and computer again.

Important

- For macOS, make sure the lock icon is on the lower left of the **Printers & Scanners** screen (**Print & Scan** screen in Mac OS X v10.8 or Mac OS X v10.7).

  If the icon (locked) is displayed, click the icon to unlock. (The administrator name and the password are necessary to unlock.)

1. Turn off printer.
2. Unplug USB cable from printer and computer and connect it again.
3. Turn on printer.

Check3 If you cannot resolve problem, follow procedure below to reinstall printer driver.

- For Windows:

  1. Click **Cancel**.

2. Click **Back to Top** on **Setup Canceled** screen.

3. Click **Exit** on **Start Setup** screen and finish setup.

4. Turn off printer.

5. Restart computer.

6. Make sure you have no application software running.

7. Perform setup on web page.

Note

- You can use the Setup CD-ROM to redo setup.

- For macOS:

1. Click **Next**.
   - If the screen telling you that installation has not been completed appears, click **Abort** on displayed screen and finish setup.
   - If the **Connection failed.** screen appears:

     1. Click **Next**.

     2. Click **Next** on displayed screen.

     3. Click **Back to Top** on **Select Printer** screen.

     4. Click **Exit** on **Start Setup** screen and finish setup.

3. Turn off printer.

4. Restart computer.

5. Make sure you have no application software running.

6. Perform setup on web page.

Searching Printer by IP Address or Host Name During Setup

If the printer cannot be found on the **Select Printer** screen, search for the printer by an IP address or host name. Click **Specify the IP address and run the search** on the screen which appears by clicking **Printer Not Found** and click **Next**. The screen to select searching criteria appears.

1. Check printer's IP address or host name.

   To check the printer's IP Address or host name, print out the network settings information or use the operation panel to display it.

   - Display on the touch screen.

     LAN settings

   - Print the network settings.

     Printing Network Settings

   Note

   - If you use the printer in an office, ask the network administrator.

2. Specify searching method.

   Select one of the method below.

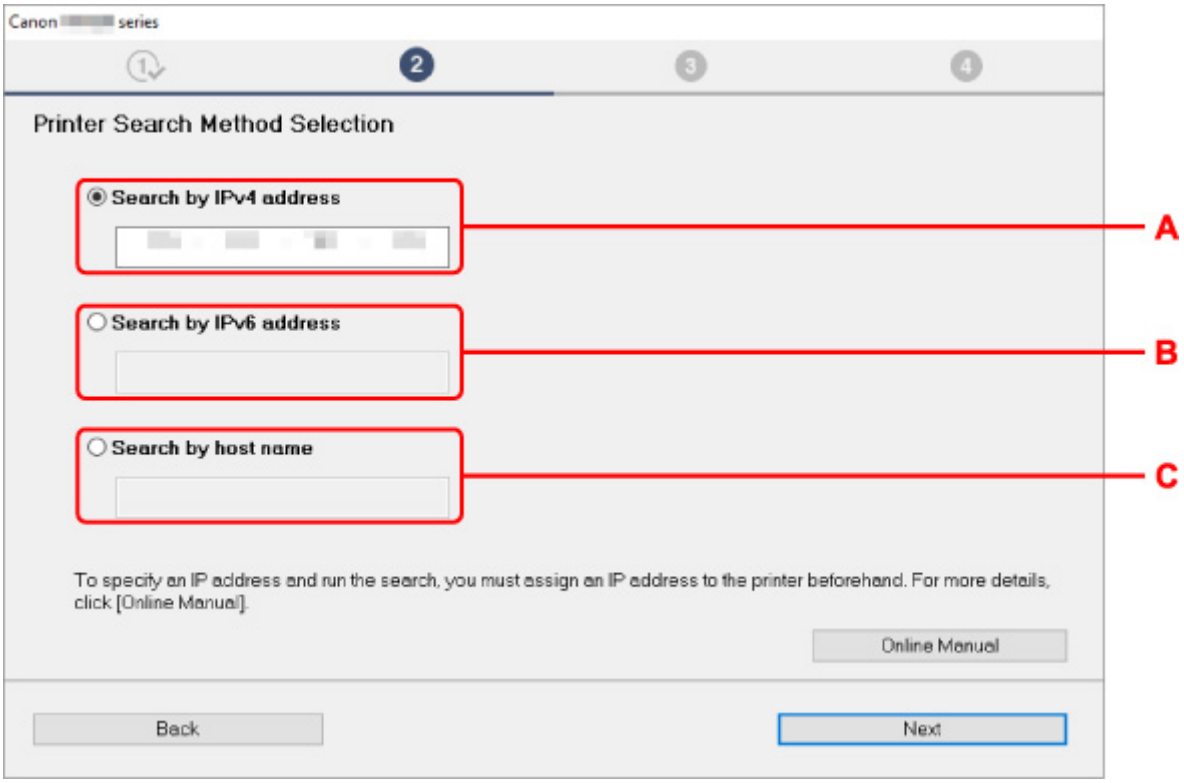

A: Search by IPv4 address

Select to search for printers by IPv4 address.

B: Search by IPv6 address

Select to search for printers by IPv6 address.

C: Search by host name

Select to search for printers by host name. A host name is referred to as LLMNR host name or Bonjour name.

3. Enter IP address or host name and click **Next**.

   Printer search starts.

If an error screen appears:

Resolve the error according to the instruction on the screen.

If the IP address you entered is already used for another device, follow the procedure below to specify printer's IP address.

1. Select (**Network status**) icon.

   Menu Operations

   If you specify the administrator password, enter the password.

2. Select **Wi-Fi**.

3. Select **Settings**.

4. Select **Advanced**.

5. Select **TCP/IP settings**.

   - **If you specify IPv4 address:**

     1. Select **IPv4**.

     2. Select **Yes** on the displayed screen.

     3. Select **IP address**.

     4. Select **Manual setup**.

        Selecting **Auto setup** specifies the IP address automatically.

     5. Enter IP address.

     6. Select **OK**.

     7. Enter subnet mask.

8. Select **OK**.

9. Enter default gateway.

10. Select **OK**.

    The IPv4 address has been specified.

- **If you specify IPv6 address:**

1. Select **IPv6**.

2. Select **Yes** on the displayed screen.

3. Select **Enable/disable IPv6**.

4. Select **Enable**.

   The IPv6 address has been specified.

Important

- If firewall is enabled on the computer, printers on a different subnet may not be detected. Disable firewall.

If firewall interferes with printer search:

- **If message appears:**

  If a message appears warning that Canon software is attempting to access the network, set the security software to allow access.

  After allowing the software to access, specify the IP address or host name and search for printers again.

  If the printer is found, follow the instructions on the screen to continue to set up the network communication.

- **If no message appears:**

  Cancel searching printers, and then set the security software to allow Canon software below to access the network.

  - For Windows:

    Setup.exe or **Setup64.exe** in the **win** > **Driver** > **DrvSetup** folder on the Setup CD-ROM

  - For macOS:

    Setup.app, **canonijnetwork.bundle**, **cnwidsd.plugin**, **cnwidss.plugin**

  After setting the security software, specify the IP address or host name and search for printers again.

Note

- For more on firewall settings of your operating system or security software, see instruction manual or contact its manufacturer.

Cannot Find Printer while Using Wi-Fi

Check1 Make sure printer is turned on.

If not, make sure the printer is securely plugged in and press **ON** button to turn on.

The **ON** lamp flashes while the printer is initializing. Wait until the **ON** lamp stops flashing and remains lit.

Check2 Check the network status on the touch screen.

If the icon is displayed, or only the icon is displayed, wireless LAN is disabled.

Set **Enable/disable Wi-Fi** in the touch screen menu to **Enable**.

If the icon is displayed, see Check 3 or later checking items to make sure whether printer setup is complete or the settings of wireless router to connect are correct.

Check3 Make sure printer setup is complete on the computer.

If it is not, perform setup.

- For Windows:

  Perform setup using the Setup CD-ROM or from the web page.

- For macOS:

  Perform setup from the web page.

Note

- IJ Network Device Setup Utility allows you to diagnose and repair the network status. Download it from the web page.

  - For Windows
  - For macOS

Check4 Make sure printer and wireless router network settings match.

Make sure the network settings of the printer (e.g. wireless router name, SSID, network key, etc.) are identical with those of the wireless router.

To check the settings of the wireless router, refer to the instruction manual provided with it or contact its manufacturer.

Note

- Use 2.4 GHz frequency band to connect to a wireless router. Match the SSID set for the printer with that for 2.4 GHz frequency band of the wireless router.

To check the SSID set for the printer, print out the network setting information or use the operation panel to display it.

- Display on the touch screen.

  LAN settings

- Print the network settings.

  Printing Network Settings

Note

- IJ Network Device Setup Utility allows you to diagnose and repair the network status.

  Select the link below to download IJ Network Device Setup Utility and install it.

  Checking Printer Connection Status Using IJ Network Device Setup Utility

  See below for starting up IJ Network Device Setup Utility.

  - For Windows:

    Starting Up IJ Network Device Setup Utility

  - For macOS:

    Starting Up IJ Network Device Setup Utility

Check5 Make sure the printer is not placed too far away from the wireless router.

If the distance between the printer and wireless router is too far, wireless communication becomes poor. Place the printer and wireless router close to each other.

Note

- Though an antenna is attached to most wireless routers, note that some of them have it inside.

Check6 Make sure wireless signal is strong. Monitor signal strength and move printer and wireless router as necessary.

Place the printer and wireless router where there are no obstacles between them. Wireless communication between different rooms or floors is generally poor. Wireless communication can be impeded by building materials containing metal or concrete. If the printer cannot communicate with the computer over a Wi-Fi due to a wall, place the printer and the computer in the same room.

In addition, if a device like a microwave oven that emits radio waves of the same frequency bandwidth as a wireless router is nearby, it may cause interference. Place the wireless router as far away from interference sources as possible.

Note

- IJ Network Device Setup Utility allows you to diagnose and repair the network status.

  Select the link below to download IJ Network Device Setup Utility and install it.

  Checking Printer Connection Status Using IJ Network Device Setup Utility

  See below for starting up IJ Network Device Setup Utility.

  - For Windows:

    Starting Up IJ Network Device Setup Utility

  - For macOS:

Starting Up IJ Network Device Setup Utility

Check7 Make sure the computer is connected to the wireless router.

For more on how to check the computer settings or connection status, see your computer instruction manual or contact its manufacturer.

Note

- If you use a smartphone or tablet, make sure the Wi-Fi is enabled on the device.

Check8 Make sure **Enable bidirectional support** is selected in the **Ports** sheet of the properties dialog box of the printer driver. (Windows)

If not, select it to enable bidirectional support.

Check9 Make sure security software's firewall is off.

If your security software's firewall is on, a message may appear warning you that Canon software is attempting to access the network. If this warning message appears, set security software to always allow access.

If you are using any programs that switch between network environments, check their settings. Some programs use a firewall by default.

Check10 If printer is connected to an AirPort Base Station via LAN, make sure you use alphanumeric characters for network identifier (SSID). (macOS)

If the problem is not resolved, redo setup.

- For Windows:

  Perform setup using the Setup CD-ROM or from the web page.

- For macOS:

  Perform setup from the web page.

Cannot Find Printer while Using Wired LAN

Check1 Make sure printer is turned on.

If not, make sure the printer is securely plugged in and press **ON** button to turn on.

The **ON** lamp flashes while the printer is initializing. Wait until the **ON** lamp stops flashing and remains lit.

Check2 Is icon displayed on touch screen?

If the icon is not displayed, wired LAN is disabled.

If not, select (**Setup**) icon, **Device settings**, **LAN settings**, **Wired LAN**, **Settings**, and then select **Enable** for **Enable/disable Wired LAN**.

Check3 Make sure LAN cable is connected properly.

Make sure the printer is connected to the router with the LAN cable. If the LAN cable is loose, connect the cable properly.

If the LAN cable is connected to the WAN side of the router, connect the cable to the LAN side of the router.

Cannot Print Using AirPrint

Check1 Make sure printer is turned on.

If the printer is turned on, turn it off and back on, and then check whether the issue is resolved.

Check2 Make sure printer is registered to your computer.

Check3 Make sure printer is connected by LAN to same network subnet as AirPrint compliant device when printing over LAN.

Check4 Make sure printer has enough paper and ink.

Check5 Make sure no error message is displayed on printer's touch screen.

Installation Problems

- Removing Printer Software
- Taking Time to Setup Process (Windows)
- Failed to Printer Driver Installation (Windows)

Removing Printer Software

Follow the steps below to remove utility software installed on the computer.

Important

- You must log in as an administrator or have administrator permissions.

Note

- See the pages below for how to remove printer drivers.
  - Deleting the Unnecessary Printer Driver (Windows)
  - Deleting the Unnecessary Printer Driver (macOS)

Removing the IJ Network Device Setup Utility (Windows)

Follow the steps below to remove the IJ Network Device Setup Utility.

- Windows 10

  1. Click **start**, select **Windows System**, and then select **Control Panel**.
  2. Under **Programs**, select **Programs and Features**, select IJ Network Device Setup Utility from the list of programs, and then click **Uninstall**.

- Windows 8.1

  1. Use the **Settings** charm on the desktop to open the **Control Panel**.
  2. Under **Programs**, select **Programs and Features**, select IJ Network Device Setup Utility from the list of programs, and then click the **Uninstall** button.

- Windows 7

  1. Select **Control Panel** from the **start** menu.
  2. Select **Uninstall a program**.
  3. Select IJ Network Device Setup Utility, and then click the **Uninstall** button.

Note

- If the **User Account Control** dialog box is displayed, click **Yes**.

Removing the IJ Network Device Setup Utility (macOS)

Follow the steps below to remove the IJ Network Device Setup Utility.

1. Select **Applications** from **Go** menu of Finder, double-click **Canon Utilities** > **IJ Network Device Setup Utility**, and then drag **Canon IJ Network Device Setup Utility** icon into **Trash**.

2. Restart computer.

   Empty the **Trash** and restart your computer.

Note

- To reinstall IJ Network Device Setup Utility, uninstall IJ Network Device Setup Utility and install it again from the Canon website.

Taking Time to Setup Process (Windows)

If Windows update starts during setup, or if you perform setup while Windows update is in progress, it may take a while to register the printer or to perform other processes.

Wait for a while. This is not a malfunction.

Failed to Printer Driver Installation (Windows)

- **If installation does not start when you insert Setup CD-ROM:**

  Follow the instructions below to start the installation.

  1. Make the following settings.
     - In Windows 10, click **Start** button > **File Explorer**, and then click **This PC** from list on left.
     - In Windows 8.1, select **Explorer** icon in **Taskbar** on **Desktop**, and then select **This PC** from list on left.
     - In Windows 7, click **Start**, and then click **Computer**.
  2. Double-click the CD-ROM icon in the window that appears.

     If the contents of the CD-ROM appear, double-click **MSETUP4.EXE**.

     If you cannot install the printer driver with the Setup CD-ROM, install it from the Canon website.

Note

- If the CD-ROM icon does not appear, try the following:
  - Remove the CD-ROM from your computer and reinsert it.
  - Restart your computer.

  If the icon still does not appear, try a different disc and see if it appears. If it does, there is a problem with the Setup CD-ROM. Contact your nearest Canon service center to request a repair.

- **If you cannot get past the Printer Connection screen:**

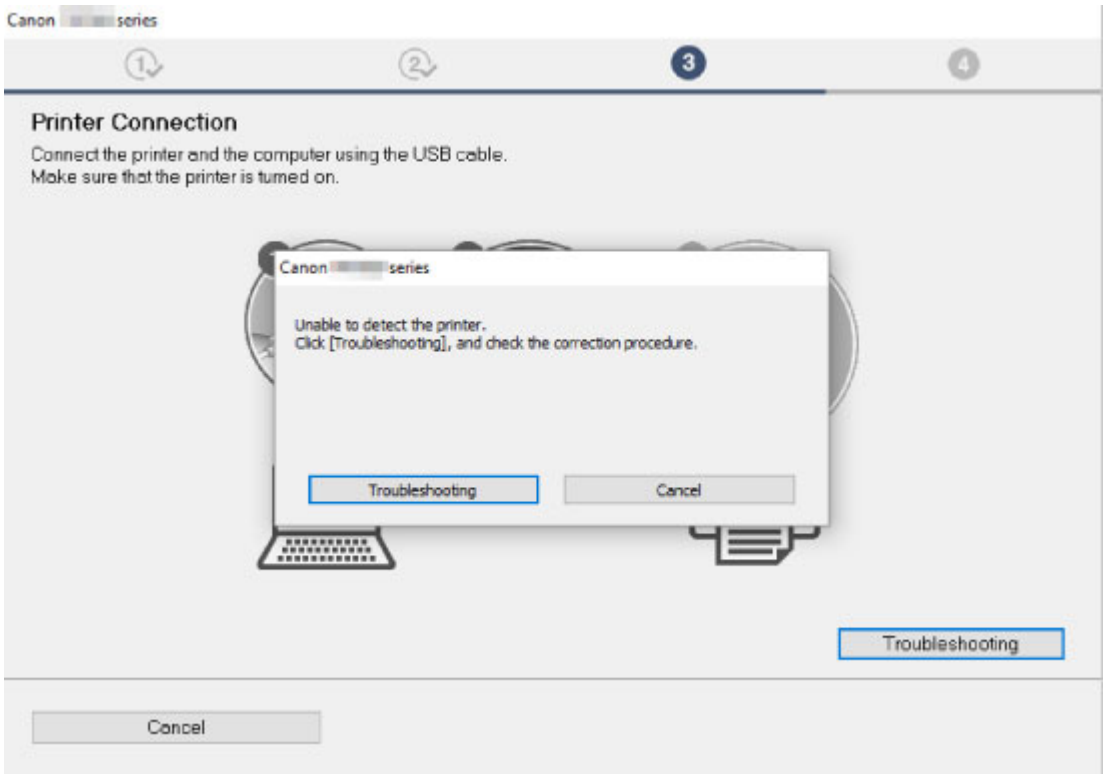

Cannot Proceed beyond Printer Connection Screen/Connect Cable Screen

- **Other cases:**

Reinstall the printer driver.

If the printer driver was not installed correctly, uninstall the printer driver, restart your computer, and then reinstall the printer driver.

Deleting the Unnecessary Printer Driver

Reinstall the printer driver with the Setup CD-ROM or install it from the Canon website.

Note

- If the installer was stopped due to a Windows error, Windows operation may be unstable, and you may not be able to install the drivers. Restart your computer and then reinstall the drivers.

HP-GL/2 problems

- With HP-GL/2, printing is misaligned
- Lines or images are missing in printed HP-GL/2 jobs
- Lines are printed too thick or thin in HP-GL/2 print jobs
- HP-GL/2 jobs are printed in monochrome (or color)
- Printed colors of lines are inaccurate during HP-GL/2 printing
- HP-GL/2 jobs are printed 6 mm larger than specified
- HP-GL/2 jobs are printed at maximum size, even if a standard size is specified
- HP-GL/2 printing takes a long time
- The printer stops when printing a HP-GL/2 job (the carriage stops moving)

With HP-GL/2, printing is misaligned

Check Check the **Margin** setting.

Adjust the **Margin** setting values in the touch screen menu.

- Print settings

Lines or images are missing in printed HP-GL/2 jobs

Check 1 Is the memory full?

Check the size of the data in the print job.

Check 2 Is the printer receiving an HP-GL/2 command not supported by this printer?

Check the print job and settings.

Check 3 Has the printer received print data that includes HP RTL commands when **Auto rotation** is **ON**?

Set **Auto rotation** to **OFF** in the touch screen menu and print again.

Print settings

Check 4 Is **Oversize** set to **Disable**?

Set **Oversize** to **Enable** in the touch screen menu.

Print settings

Lines are printed too thick or thin in HP-GL/2 print jobs

Check 1 Check the **Width** setting in **Pen setup** menu.

Select **Pen setup**, then select **Define palette**, and change the **Width** setting of each pen in each palette.

Print settings

Check 2 Check the **Width correction** setting.

Change the **Width correction** setting in the touch screen menu.

Print settings

Check 3 Is **Adjust faint lines** set to **OFF**?

If fine lines are printed faintly, setting **Adjust faint lines** to **ON** will print the lines more distinctly.

Print settings

HP-GL/2 jobs are printed in monochrome (or color)

Check Check the **Color mode** setting.

Check the **Color mode** setting in the touch screen menu.

Print settings

However, for optimal Printhead performance, the printer consumes trace amounts of color ink even when **Monochrome** is selected as **Color mode**.

Printed colors of lines are inaccurate during HP-GL/2 printing

Check Is **Adjust faint lines** set to **ON**?

Setting **Adjust faint lines** to **OFF** in the touch screen menu may help produce the expected results. However, lines in some colors may appear broken.

Print settings

HP-GL/2 jobs are printed 6 mm larger than specified

Check Check the page size of the HP-GL/2 print job, as created in the source application.

Set **Oversize** to **OFF** in the touch screen menu.

Print settings

HP-GL/2 jobs are printed at maximum size, even if a standard size is specified

Check Check the page size of the HP-GL/2 print job, as created in the source application.

Set **Conserve paper** to **ON** in the touch screen menu.

Print settings

HP-GL/2 printing takes a long time

Check 1 Is the print data size large?

Large print jobs with a lot of data take longer to print. Please wait a while until printing is finished.

Check 2 Is **Input resolution** set to **600 dpi**?

Set **Input resolution** to **300 dpi**.

Adjusting Feed Amount

The printer stops when printing a HP-GL/2 job (the carriage stops moving)

Check 1 The printer is analyzing the print job.

Please wait a while until printing is finished.

Check 2 Is **Input resolution** set to **600 dpi**?

Set **Input resolution** to **300 dpi**.

- Adjusting Feed Amount

Other Problems

- Printer does not turn on
- If the Printer Makes a Strange Sound
- Messages advising to check the maintenance cartridge are not cleared
- Printer consumes a lot of ink
- Printed pages are not collected cleanly in the basket
- Ink Level Detection

Q

Printer does not turn on

A

Check 1 Is the power cord plugged in?

Plug the power cord into the outlet, and then turn on the printer.

Check 2 Is the specified voltage being supplied?

Check the voltage of the outlet and breaker.

- Specifications

If the Printer Makes a Strange Sound

Check 1 Has an unusual noise been produced from the vicinity of the roll holder?

If dust accumulates on the gear (A) at the end of the roll holder, a noise may produced from that area.

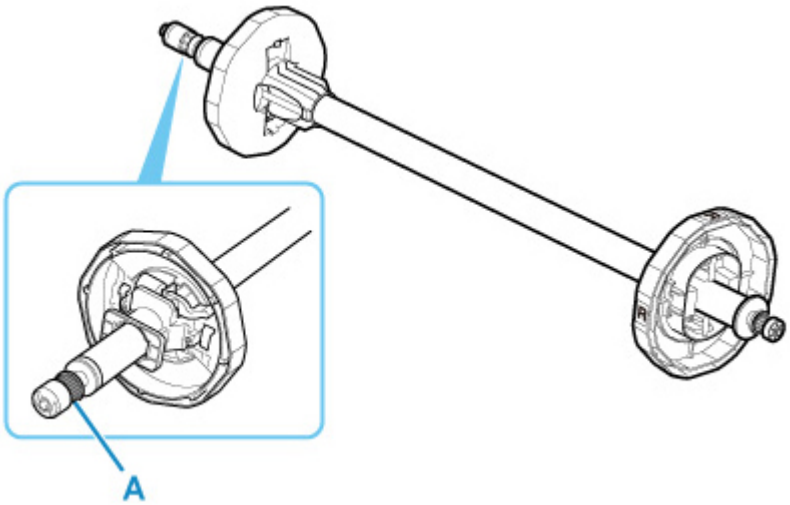

When the noise starts, clean the gear with the following procedure.

1. Remove the roll holder from the printer.
2. Wipe the dust off the gear with a damp, tightly wrung cloth, and then dry with a dry cloth.
3. Insert the roll holder in the printer.

Check 2 Operating noise may be heard from the printer even when not printing.

The following sounds do not indicate a problem with the printer.

- A suction sound can be heard from the platen

  To prevent the paper from rising, the surface of the platen has vacuum holes that create suction on the paper.
- Roll paper makes a fluttering sound during printing.

  There may be a fluttering sound when large paper is advanced.
- You suddenly hear the sound of cleaning operations.

  Cleaning is automatically performed at specified intervals in order to keep the printer maintained.
- You suddenly hear the sound of ink agitation.

  Ink is automatically agitated after specified intervals to maintain optimal print quality. Agitation takes approximately 20 seconds to 2 minutes.

Ink is also agitated automatically at the following times. Please note that no other operations can be performed while "**Agitating the ink**" is on the touch screen.

- After the printer is turned on
- After data transmission
- After ink tank replacement

In other cases, contact your Canon dealer.

Messages advising to check the maintenance cartridge are not cleared

The newly replaced maintenance cartridge is not recognized.

Remove the newly replaced maintenance cartridge, and then reinsert it again firmly.

- Replacing the Maintenance Cartridge

Q

Printer consumes a lot of ink

A

Check 1 Are lots of full-color materials being printed?

In print jobs such as photos, images are filled with color. This consumes a lot of ink. This does not indicate a problem with the printer.

Check 2 Is **System cleaning** being carried out frequently?

System cleaning uses a lot of ink. This is normal. We recommend that you only carry out **System cleaning** after the printer has been transported, if has not been used for a long time, or if there is a problem with the print head.

Check 3 You have just finished initial installation, when more ink is consumed to fill the system.

If using the printer for the first time, or using it after transport, the ink tank will supply an initial fill of ink to the print head.

Although the amount of remaining ink may drop as a result, it does not indicate a problem.

Check 4 Is the print head nozzle blocked?

Check for nozzle clogging.

- Checking for Nozzle Clogging

Printed pages are not collected cleanly in the basket

Check Is the basket in the right position for the media size?

The optimal basket position depends on factors such as media size or orientation.

Make sure the basket is used properly.

Using the Basket

Ink Level Detection

The printer ink tank detects the amount of ink remaining to prevent running out of ink while printing and to avoid printer failure.

Ink Tanks

When using an ink tank refilled with ink, the function for detecting the remaining ink level may not operate properly and printing may stop. If you want to use an ink tank refilled with ink, you need to disable the function for detecting the remaining ink level.

Printing with the ink level detection canceled may lead to printer damage and printing problems. Canon Inc. is not liable for any damage that may occur as a result of refilling ink.

Important

- Once the function for detecting the remaining ink level is disabled, it cannot be restored for that ink tank. To restore the function for detecting the remaining ink level, replace the ink tank with a new ink tank for that printer.
- Repeatedly removing and inserting the same ink tank can cause the contacts between the ink tank and printer to malfunction, ink may leak from the ink tank, and the printer may become damaged.

Releasing ink level detection

Ink level detection will be deactivated if you load ink tanks once emptied.

If **The above ink tank may be an ink tank that ran out of genuine Canon ink or a counterfeit Canon ink tank.** appears on the touch screen, follow the steps below.

1. Move through the screens, performing the actions described in the messages that appear on the touch screen.

2. If an instruction to disable detection of remaining ink appears on the touch screen, hold down the **Stop** button for at least 5 seconds and then release it.

   Ink level detection is now released.

List of Support Code for Error

Support codes appear on the PC when an error occurs.

Support codes are error identification numbers that appear alongside error messages.

If an error occurs, check the support code and follow the recommended steps to resolve the issue.

Support code displayed

- **1000 to 1ZZZ**

  1005 100A 1012 1021 1024 1041

  1051 1052 1054 1055 1056 1057

  1058 1061 1200 1201 1210 1213

  1214 1300 1306 1317 1322 1323

  1324 1401 1403 1408 1409 140A

  140B 140C 140F 1468 1477 1478

  1480 1481 1485 1492 1494 1495

  1500 1551 1552 1570 1571 1660

  168B 1720 1721 1722 1730 1731

  1752 1753 1756 1757

- **2000 to 2ZZZ**

  2130 2131 2132

- **3000 to 3ZZZ**

  3000 3001 3200 3201 3250 3300

  3301 3302 3303 3304 3306 3311

  3312 3313 3314 3315 3316 3317

  3331 3332 3333 3337 3340 3341

  3414 3415 3416 3417 3418 3419

  3420 3421 3422 3423 3424 3448

- **4000 to 4ZZZ**

  4111 4113 4114 4115 4116 4117

4801 4803 4905 4910 4911 4913

4920 4931 4932 4933 4934 4935

4937 4950 4951 4952 4953 4954

4955 4956 4957

- **5000 to 5ZZZ**

5106 5200 5B16 5B20 5B21 5C00

- **6000 to 6ZZZ**

6502 6700 6702 6820 6900 6901

6902 6910 6911 6920 6921 6930

6931 6932 6933 6940 6941 6942

6943 6944 6945 6946

- **7000 to 7ZZZ**

7050 7051 7052

- **8000 to 8ZZZ**

8200

- **9000 to 9ZZZ**

9000 9110

- **A000 to ZZZZ**

B20A B510

1005

Cause

You have attempted to print on a sheet, but no sheet is loaded.

What to Do

Check the media size and type for the print job on the touch screen, and then tap **OK**.

- **Continuing to print**

  Tap **Load paper**, and then load the paper.

  Loading and Printing on Sheets

- **Stopping printing**

  To stop printing, tap **Cancel** on the touch screen or press the **Stop** button.

100A

Cause

You have attempted to print on a roll, but no roll is loaded.

What to Do

Tap **Load paper** on the touch screen, and then load the paper roll and print.

- Loading Rolls on the Roll Holder
- Loading Rolls in the Printer

Note

- To stop printing, tap **Cancel** on the touch screen or press the **Stop** button.

1012

Cause

You have attempted to print on a sheet, but no sheet is loaded.

What to Do

Tap **Load paper** on the touch screen, and then load cut paper and print.

Loading and Printing on Sheets

Note

- To stop printing, tap **Cancel** on the touch screen or press the **Stop** button.

1021

Cause

The printer has received a print job longer than the amount of roll paper left.

What to Do

- **Continuing to print**

  To continue printing, tap **Print with the loaded paper.** on the touch screen.

  However, the roll paper may run out during the print job and you may not be able to print all of the document.

- **Replacing paper**

  Tap **Replace the paper and print** and print on the touch screen.

  Change the **Paper Source** in the printer driver, or replace the paper with paper of the right length for the print job, and then try again.

  - Removing the Roll from the Printer
  - Loading Rolls in the Printer

- **Stopping printing**

  To stop printing, tap **Cancel** on the touch screen or press the **Stop** button.

1024

Cause

Possible causes include the following.

- Roll paper is empty.
- There is remaining roll paper, but because it could not be advanced, it could not be detected.

What to Do

- **The roll paper has run out**

  Follow the steps below to replace the used roll with a new roll of the same type and size.

  1. Tip back the release lever and remove the roll paper.

     - Removing the Roll from the Printer
     - Removing Rolls From the Roll Holder

  2. Load the new roll.

     - Loading Rolls on the Roll Holder
     - Loading Rolls in the Printer

  3. If no barcode was printed on the roll, specify the paper type.

     - Changing the Type of Paper

  4. If **Manage remaining roll amount** is set to **Barcodes** in the touch screen menu and there is no barcode printed on the paper roll, set the paper length.

     - Specifying the Paper Length

  5. If "**There is a job whose printing is not complete. Do you want to print this job?**" appears on the touch screen, tap **Yes**.

     Printing will resume, starting from the page on which the error occurred.

- **Feed stopped because the end of the paper roll is attached to the core with tape**

  Remove the used roll paper and insert a new roll paper.

  - Removing the Roll from the Printer
  - Removing Rolls From the Roll Holder
  - Loading and Printing on Rolls

- **Feed stopped because the remaining paper roll is too heavy**

  It may be helpful to change the printing mode, which will change the paper feed timing.

  If using Windows, select a higher **Print Quality** setting under **Advanced Settings** in the printer driver.

  If using macOS, select **Quality & Media** in the printer driver, and then select a higher **Print Quality** setting.

  - Setting the Print Quality Level (Custom) (Windows)
  - Setting the Print Quality Level (Custom) (macOS)

Note

- To stop printing, press the **Stop** button.

1041

Cause

You have selected wrong paper source for **Replace paper**.

What to Do

Match the paper source for loading paper with the paper source setting for **Replace paper**.

For the roll paper, select **Roll paper** and load it.

For the cut sheet, select **Cut sheet** and load it.

1051

Cause

The media type specified in the printer driver is not the same as the media type loaded in the printer.

What to Do

You can continue to print, but note that this error may cause problems in the printing results.

1052

Cause

The width of the roll paper set in **Fit Roll Paper Width** in the printer driver is not the same as the width of the roll paper loaded in the printer.

What to Do

You can continue to print, but note that this error may cause problems in the printing results.

1054

Cause

The paper in the printer is smaller than the paper size set in the printer driver.

What to Do

You can continue to print, but note that this error may cause problems in the printing results.

1055

Cause

The paper size in the printer cannot be printed borderless.

What to Do

You can continue to print, but note that this error may cause problems in the printing results.

1056

Cause

The paper position is not suitable for borderless printing.

What to Do

You can continue to print, but note that this error may cause problems in the printing results.

1057

Cause

The paper position is not suitable for borderless printing.

What to Do

You can continue to print, but note that this error may cause problems in the printing results.

1058

Cause

Roll paper has almost run out.

What to Do

Printing will continue. Replace the roll paper in the printer with one that has enough paper for printing as soon as possible.

- Removing the Roll from the Printer
- Loading Rolls in the Printer

Note

- To stop printing, press the **Stop** button.

1061

Cause

The media type specified in the printer driver is not the same as the media type loaded in the printer.

What to Do

Tap **OK** on the touch screen.

Make sure that the media type that appears on the touch screen is the same as the media type that has been loaded, and then tap **OK**.

- **Printing again**

  Follow the steps below to match the media type in the printer driver and the media type specified for the printer.

  1. Tap **Cancel** to stop printing.
  2. Change the media type in the printer driver settings to the media type loaded in the printer, and then try again.

- **Replacing paper**

  Follow the steps below to match the media type in the printer driver and the media type specified for the printer.

  1. Tap **Replace the paper and print**.
  2. Load the paper with the media type specified in the printer driver.

     - Loading and Printing on Rolls
     - Loading and Printing on Sheets

- **Continuing to print**

  To continue printing, tap **Print with the loaded paper.** on the touch screen.

  However, note that this error may cause paper jams and affect the printing quality.

1200

Cause

Top cover or print head lock lever is open.

What to Do

Open the top cover and make sure the print head lock lever is closed properly.

Make sure there are no foreign objects caught in the top cover, and then close the top cover.

If this error appears again, close the top cover, turn the power off, wait a moment, and then turn the power back on.

Note

- If installing a print head, close the top cover after finishing.

1201

Cause

The ink tank cover is open.

What to Do

Close the ink tank cover.

1210

Cause

The ink tank cover is open.

What to Do

Close the ink tank cover.

1213

Cause

Release lever is released.

What to Do

Pull the release lever toward the front.

If the error occurs again, turn off the printer and wait a while before restoring power.

1214

Cause

While the printer was printing or performing maintenance, the release lever was released.

What to Do

Turn off the power, wait a moment, and then turn it back on.

If the error appears again, make a note of the detailed error code (ECxx-xxxx) that appears on the touch screen, and then turn off the power and contact a Canon customer service center.

Detailed error codes

EC19-2F21

1300

Cause

Paper jammed inside the printer while printing.

What to Do

Follow these steps below to remove jammed paper.

1. Tip back the release lever and remove the jammed paper.

   - Clearing Jammed Roll Paper
   - Clearing a Jammed Sheet

2. Load the paper.

   - Loading Rolls in the Printer
   - Loading Sheets in the Printer

3. If "**There is a job whose printing is not complete. Do you want to print this job?**" appears on the touch screen, tap **Yes**.

   Printing will resume, starting from the page on which the error occurred.

If the error appears again, the printer may be damaged. Contact a Canon customer service center.

1306

Cause

A print job for rolls was received when a sheet is loaded.

What to Do

Follow these steps to load and print on a roll.

1. To remove the cut paper, tap **Remove paper** on the touch screen.

   Removing Sheets

2. Load a new roll.

   Loading Rolls in the Printer

Note

- To stop printing, tap **Cancel** on the touch screen or press the **Stop** button.

1317

Cause

Paper loaded crooked was detected when the paper was advanced.

What to Do

Tip back the release lever and reload the paper.

- Loading Rolls in the Printer
- Loading Sheets in the Printer

If this error appears again even after reloading the paper roll, remove the roll holder from the printer, insert the paper roll firmly into the roll holder until it is up against the flange, and then insert the roll holder into the printer.

- Loading Rolls on the Roll Holder

Important

- If this message continues to appear even after taking the steps above, or if you do not want this message to appear, set **Skew detection accuracy** in the printer menu to **OFF** or **Loose**. However, note that the paper will be printed skewed, which could cause paper jams and abnormal print results, or dirty the platen and the reverse of the next printed sheet.

1322

Cause

Cannot detect paper size because paper is not in the correct position or because curled paper has been loaded.

What to Do

Tip back the release lever and remove any paper. Then check the paper and reload it.

- Loading Rolls in the Printer
- Loading Sheets in the Printer

If "**There is a job whose printing is not complete. Do you want to print this job?**" appears on the touch screen, tap **Yes**.

Printing will resume, starting from the page on which the error occurred.

Note

- If this error appears again even after reloading the paper roll, remove the roll holder from the printer, insert the paper roll firmly into the roll holder until it is up against the flange, and then insert the roll holder into the printer.

  - Loading Rolls on the Roll Holder

- This error might also appear if the platen has been dirtied by ink or another substance, or if the size of clear film could not be detected. In this case, open the top cover and clean the entire platen area.

  - Cleaning Inside the Top Cover

1323

Cause

An unsuitable paper size has been loaded.

What to Do

Tip back the release lever, remove any paper, and then reload paper of suitable size.

- Paper Sizes
- Loading Rolls in the Printer
- Loading Sheets in the Printer

Note

- Load unused A4/letter size or larger paper if printing calibration and nozzle check patterns. Each calibration may take several sheets of paper.

1324

Cause

A print job for printing on sheets was sent when a roll is loaded.

What to Do

Follow the steps below to print again.

1. Tap **Remove paper** on the touch screen to stop printing.
2. Remove the paper roll, load cut paper of the size and type specified in the printer driver, and then try again.

   - Removing the Roll from the Printer
   - Loading and Printing on Sheets

Note

- To stop printing, tap **Cancel** on the touch screen or press the **Stop** button.

1401

Cause

Failed to recognize print head.

What to Do

Open the top cover and reattach the print head.

- Replacing the Print Head

1403

Cause

There is a problem with the print head.

What to Do

Tap **OK** on the touch screen, and then replace the current print head with a new one.

- Replacing the Print Head

If you do not have a replacement print head ready, turn off the power and replace the print head once you have the new one.

1408

Cause

There is a problem with the print head.

What to Do

Tap **OK** on the touch screen, and then replace the current print head with a new one.

- Replacing the Print Head

If you do not have a replacement print head ready, turn off the power and replace the print head once you have the new one.

1409

Cause

There is a problem with the print head.

What to Do

Tap **OK** on the touch screen, and then replace the current print head with a new one.

- Replacing the Print Head

If you do not have a replacement print head ready, turn off the power and replace the print head once you have the new one.

140A

Cause

There is a problem with the print head.

What to Do

Tap **OK** on the touch screen, and then replace the current print head with a new one.

Replacing the Print Head

If you do not have a replacement print head ready, turn off the power and replace the print head once you have the new one.

140B

Cause

Failed to recognize print head.

What to Do

Open the top cover and reattach the print head.

- Replacing the Print Head

140C

Cause

There is a problem with the print head.

What to Do

Turn off the power, wait a moment, and then turn it back on.

140F

Cause

There is a problem with the print head.

What to Do

Tap **OK** on the touch screen, and then replace the current print head with a new one.

Replacing the Print Head

If you do not have a replacement print head ready, turn off the power and replace the print head once you have the new one.

1468

Cause

Printer error has occurred.

What to Do

Turn off the power, wait a moment, and then turn it back on.

If the error appears again, make a note of the detailed error code (ECxx-xxxx) that appears on the touch screen, and then turn off the power and contact a Canon customer service center.

Detailed error codes

EC55-2F24

1477

Cause

There is a problem with the print head.

What to Do

Open the top cover and replace the print head with a new one.

- Replacing the Print Head

1478

Cause

There is a problem with the print head.

What to Do

Tap **OK** on the touch screen, and then replace the current print head with a new one.

- Replacing the Print Head

If you do not have a replacement print head ready, turn off the power and replace the print head once you have the new one.

1480

Cause

The attached print head was previously used in a different model.

What to Do

Attach the correct print head.

- Replacing the Print Head

1481

Cause

The attached print head was previously used in a model that uses a different ink set.

What to Do

Attach the correct print head.

- Replacing the Print Head

1485

Cause

Cannot use attached print head.

What to Do

Attach the correct print head.

- Replacing the Print Head

1492

Cause

A printer error has occurred.

What to Do

Turn off the power, wait a moment, and then turn it back on.

If the error appears again, make a note of the detailed error code (ECxx-xxxx) that appears on the touch screen, and then turn off the power and contact a Canon customer service center.

Detailed error codes

EC02-2F42 EC21-2F44 EC3F-2F40 EC3F-2F41

1494

Cause

There may be a problem with the print head.

What to Do

Turn off the power, wait a moment, and then turn it back on.

If the error appears again, remove and reattach the print head.

Replacing the Print Head

If that does not get rid of the error, replace the print head with a new one.

1495

Cause

The print head nozzle is blocked.

What to Do

Follow the steps below to clean the print head.

1. Tap **Cancel** on the touch screen to stop printing.
2. Clean the print head.

   Cleaning the Print Head

If this message still appears when printing, replace the print head.

Replacing the Print Head

Important

- To continue printing, use the touch screen and tap **Continue printing**. However, the print results may not be satisfactory.

1500

Cause

The ink in the ink tank is running low.

What to Do

Prepare a new ink tank.

1551

Cause

A genuine Canon ink tank with a history of past use has been detected.

What to Do

To dismiss the message, tap **OK** on the touch screen.

1552

Cause

A genuine Canon ink tank has been inserted.

What to Do

To dismiss the message, tap **OK** on the touch screen.

1570

Cause

The ink in the ink tank has run out.

What to Do

Open the ink tank cover, and then replace the ink tank before the ink in the sub-ink tank of this printer becomes insufficient.

Replacing Ink Tanks

Note

- You can replace the ink tank even while printing.

1571

Cause

Ink tank removed during printing.

What to Do

If replacing the ink tank, insert a new ink tank.

- Replacing Ink Tanks

1660

Cause

Ink tank not inserted.

What to Do

Insert the ink tank correctly.

- Replacing Ink Tanks

168B

Cause

The ink tank cannot be recognized.

Printing cannot be executed because the ink tank may not be compatible with this printer.

What to Do

Install the appropriate ink tank.

1720

Cause

The maintenance cartridge is full.

It needs to be replaced.

What to Do

Replace the maintenance cartridge.

- Replacing the Maintenance Cartridge

1721

Cause

The maintenance cartridge is not installed.

What to Do

Install the maintenance cartridge.

- Replacing the Maintenance Cartridge

1722

Cause

Incorrect type of maintenance cartridge.

What to Do

Insert the correct maintenance cartridge.

Replacing the Maintenance Cartridge

If this error continues to appear, contact a Canon customer service center.

1730

Cause

The ink tank may be an ink tank that ran out of genuine Canon ink or a counterfeit Canon ink tank.

What to Do

To print, you must replace the ink tank or disable the function for detecting the remaining ink level.

To disable the function for detecting the remaining ink level, press and hold the printer's **Stop** button for at least 5 seconds, and then release it.

By this operation, the fact that you have disabled the function for detecting the remaining ink level will be memorized. Please be advised that Canon shall not be liable for any malfunction or trouble caused by continuation of printing under the ink out condition or by using refilled ink tanks.

Note

- If the function for detecting the remaining ink level is disabled, the ink tank in gray is displayed on the touch screen when checking the current ink level.

To report the counterfeit ink tank, access Canon website from the following link.

- Report Counterfeit

1731

Cause

Non-genuine Canon ink tank has been detected.

What to Do

To print, you must replace the ink tank or disable the function for detecting the remaining ink level.

To disable the function for detecting the remaining ink level, press and hold the printer's **Stop** button for at least 5 seconds, and then release it.

By this operation, the fact that you have disabled the function for detecting the remaining ink level will be memorized. Please be advised that Canon shall not be liable for any malfunction or trouble caused by using a non-genuine Canon ink tank.

Note

- If the function for detecting the remaining ink level is disabled, the ink tank in gray is displayed on the touch screen when checking the current ink level.

To report the counterfeit ink tank, access Canon website from the following link.

- Report Counterfeit

1752

Cause

The ink has run out.

What to Do

Open the ink tank cover, and then replace the ink tank.

- Replacing Ink Tanks

1753

Cause

The remaining level of the ink cannot be correctly detected.

What to Do

Replace the ink tank. Printing will restart.

Replacing Ink Tanks

An ink tank that was once empty is installed.

If you want to continue printing, you need to disable the function for detecting the remaining ink level.

To disable this function, press and hold the printer's **Stop** button for at least 5 seconds, and then release it.

With this operation, disabling the function for detecting the remaining ink level is memorized.

Please be advised that Canon shall not be liable for any malfunction or trouble caused by continuation of printing under the ink out condition or by using refilled ink tanks.

1756

Cause

The ink may become insufficient.

What to Do

To perform the next process or to continue the specified process, replace the ink tank.

- Replacing Ink Tanks

1757

Cause

Cannot fill ink reserve tank.

What to Do

Check the touch screen, remove the ink tank for the affected color, and then reinsert it.

If the inserted ink tank is empty, replace it with a new ink tank.

Replacing Ink Tanks

2130

Cause

The roll paper width set in the print job is not the same as the width of the roll paper in the printer.

What to Do

Tap **OK** on the touch screen to go to the next screen.

Check the media type and size that appear and tap **OK**.

- **Printing without changes**

  Tap **Print with the loaded paper.**.

  However, note that this error may cause paper jams and affect the printing quality.

- **Stopping printing**

  Tap **Cancel** on the touch screen or press the **Stop** button.

- **Replacing the roll paper**

  Follow the steps below to replace the paper with roll paper of the width set in the printer driver.

  1. Tap **Replace the paper and print**, then remove the roll paper.

     - Removing the Roll from the Printer
     - Removing Rolls From the Roll Holder

  2. Replace the paper with paper of the width set in the printer driver.

     - Loading Rolls on the Roll Holder
     - Loading Rolls in the Printer

     Printing begins.

Note

- To change print settings in Windows, select **Fit Roll Paper Width** in the printer driver and set the roll paper width in the dialog box that appears.
- To change print settings in macOS, open the printer driver and select **Fit Roll Paper Width**, and then set the roll paper width in that panel to the width of the paper loaded in the printer.
- To suppress this message, set **Detect paper setting mismatch** in the touch screen menu to **Do not detect**. However, note that this error may affect the printing quality.

  - Menu Structure

2131

Cause

The roll paper loaded in the printer is narrower than the roll paper width in the print job.

What to Do

Tap **OK** on the touch screen to go to the next screen.

Check the media type and size that appear and tap **OK**.

- **Printing without changes**

  Tap **Print with the loaded paper.**.

  However, note that this error may cause paper jams and affect the printing quality.

- **Stopping printing**

  Tap **Cancel** on the touch screen or press the **Stop** button.

- **Replacing the roll paper**

  Follow the steps below to replace the paper with roll paper of the width specified in the print job paper size settings.

  1. Tap **Replace the paper and print**, then remove the roll paper.

     - Removing the Roll from the Printer
     - Removing Rolls From the Roll Holder

  2. Replace the paper with paper of the width set in the printer driver.

     - Loading Rolls on the Roll Holder
     - Loading Rolls in the Printer

     Printing begins.

Note

- To change print settings in Windows, select **Fit Roll Paper Width** in the printer driver and set the roll paper width in the dialog box that appears.
- To change print settings in macOS, open the printer driver and select **Fit Roll Paper Width**, and then set the roll paper width in that panel to the width of the paper loaded in the printer.
- To suppress this message, set **Detect paper setting mismatch** in the touch screen menu to **Do not detect**. However, note that this error may affect the printing quality.

  - Menu Structure

2132

Cause

Cannot print internal printer data, such as test prints, for the following reasons.

- The paper roll loaded in the printer is too small.
- The cut paper loaded in the printer is the wrong size or type.

What to Do

- **Roll**

  Tap **Replace the paper and print** on the touch screen, or tip back the release lever and replace the paper with paper of the correct size.

  Loading Rolls in the Printer

  To stop printing, tap **Cancel** or press the **Stop** button.

- **Sheet**

  Tip back the release lever, remove any paper, and then load paper of the same size and type as the first page.

  Loading Sheets in the Printer

  To stop printing, press the **Stop** button.

3000

Cause

The print head has not been calibrated.

What to Do

Print head alignment is recommended.

- Adjusting the Print Head

Note

- This message will appear until **Print head alignment** is carried out.

3001

Cause

The print head nozzle is becoming blocked.

What to Do

Check the printed materials.

If the printed materials are scratched, clean the print head.

- Cleaning the Print Head

3200

Cause

It is almost time to replace consumables for which service is required.

What to Do

This can used for a little while, until the message "**Part replacement needed.**" appears.

Contact your Canon dealer for assistance.

3201

Cause

It is past the recommended time to replace consumables for which service is required.

What to Do

Contact your Canon dealer for assistance.

3250

Cause

The maintenance cartridge is almost full.

What to Do

Prepare a new maintenance cartridge because an error may occur if you continue to use the printer while the maintenance cartridge is full.

- Replacing the Maintenance Cartridge

3300

Cause

Printer memory is full in HP-GL/2 emulation mode.

What to Do

Check the print data.

Printing will continue, but you may not obtain correct printing results.

Check the printing results.

3301

Cause

Parameter specified in HP-GL/2 command is not supported.

What to Do

Check the print data.

Printing will continue, but you may not obtain correct printing results.

Check the printing results.

3302

Cause

Unsupported HP-GL/2 command was used.

What to Do

Check the print data.

Printing will continue, but you may not obtain correct printing results.

Check the printing results.

3303

Cause

Printer memory is full in HP-GL/2 emulation mode.

What to Do

Check the print data.

Printing will continue, but you may not obtain correct printing results.

Check the printing results.

3304

Cause

Printer memory is full in HP-GL/2 emulation mode.

What to Do

Check the print data.

Printing will continue, but you may not obtain correct printing results.

Check the printing results.

3306

Cause

Media information cannot be recognized because the printer media information is corrupt.

What to Do

Start the Media Configuration Tool, and then recover the media information.

- Media Configuration Tool Guide

To set the Media Configuration Tool to recovery mode, open the Media Configuration Tool, select this device and then click **OK**.

Select and load the media information backup file.

If you do not have a media information backup file, contact a Canon customer service center.

3311

Cause

Incorrect print data.

Illegal number of parameters.

What to Do

Defective print data, please check the print results.

If using printing software such as RIP (Raster Image Processor), contact the software manufacturer.

3312

Cause

Incorrect print data.

Required items have been omitted.

What to Do

Defective print data, please check the print results.

If using printing software such as RIP (Raster Image Processor), contact the software manufacturer.

3313

Cause

Incorrect print data.

Data out of range.

What to Do

Defective print data, please check the print results.

If using printing software such as RIP (Raster Image Processor), contact the software manufacturer.

3314

Cause

Incorrect print data.

Resolution value out of range.

What to Do

Defective print data, please check the print results.

If using printing software such as RIP (Raster Image Processor), contact the software manufacturer.

3315

Cause

Incorrect print data.

Compression method value out of range.

What to Do

Defective print data, please check the print results.

If using printing software such as RIP (Raster Image Processor), contact the software manufacturer.

3316

Cause

Incorrect print data.

Incorrect data formatting (color sequence, bit count).

What to Do

Defective print data, please check the print results.

If using printing software such as RIP (Raster Image Processor), contact the software manufacturer.

3317

Cause

Incorrect print data.

Illegal combination of resolution and image data format.

What to Do

Defective print data, please check the print results.

If using printing software such as RIP (Raster Image Processor), contact the software manufacturer.

3331

Cause

Print results may be abnormal as there is a large volume of print data.

What to Do

Check the print job.

3332

Cause

Unsupported JPEG data format.

What to Do

Check the JPEG data.

Printable file formats are as follows.

- **Files which conforms to JFIF 1.02**
  - Processing method: Basic DCT
  - Color mode: RGB/GrayScale
  - Number of colors: 24bit/8bit
  - Number of pixels: 38400 or less vertically and horizontally

  * Does not support some samplings.

3333

Cause

Unsupported JPEG data format.

What to Do

Check the JPEG data.

Printable file formats are as follows.

- **Files which conforms to JFIF 1.02**
  - Processing method: Basic DCT
  - Color mode: RGB/GrayScale
  - Number of colors: 24bit/8bit
  - Number of pixels: 38400 or less vertically and horizontally

  * Does not support some samplings.

3337

Cause

Printer is running out of memory during JPEG image processing.

What to Do

Print the image without rotating it.

To change image rotation when printing: (Setup) > **Device settings** > **Print settings** > **JPEG print settings** > **Paper settings** > **Rotate**.

Note

- You may be able to print the file by increasing JPEG file compression.

3340

Cause

There are no image processing parameters set in printing data.

What to Do

Check the media information at the printer driver.

If the media information set at the printer does not match the media information at the printer driver, update the media information at the printer driver.

- Updating Media Information in Printer Driver (Windows)
- Updating Media Information in Printer Driver (macOS)

If using printing software such as RIP (Raster Image Processor), contact the software manufacturer.

3341

Cause

Print data contains illegal image processing table.

What to Do

Check the print job image processing table.

If using printing software such as RIP (Raster Image Processor), contact the software manufacturer.

3414

Cause

Communication with mail server failed.

What to Do

Tap **OK** on the touch screen to dismiss the error.

Check that the address and port numbers of the sending mail server (SMTP server) are correct in the Remote UI mail server settings.

Setting Mail Server

If this does not resolve the error, check the status of the mail server.

Contact the mail server administrator to check the server settings and status.

3415

Cause

Communication with mail server failed.

What to Do

Tap **OK** on the touch screen to dismiss the error.

Check that the address and port numbers of the receiving mail server (POP3 server) are correct in the Remote UI mail server settings.

Setting Mail Server

If this does not resolve the error, check the status of the mail server.

Contact the mail server administrator to check the server settings and status.

3416

Cause

Communication with mail server failed.

What to Do

Tap **OK** on the touch screen to dismiss the error.

Check that the mail server and device secure connection (SSL) settings match.

Check the secure connection (SSL) settings in **Remote UI**.

- Setting Mail Server

Contact the mail server administrator to configure a secure connection (SSL) to the mail server.

3417

Cause

Communication with mail server failed.

What to Do

Tap **OK** on the touch screen to dismiss the error.

Check that the mail server and device secure connection (SSL) settings match.

Check the secure connection (SSL) settings in **Remote UI**.

- Setting Mail Server

Contact the mail server administrator to configure a secure connection (SSL) to the mail server.

3418

Cause

Communication with mail server failed.

What to Do

Tap **OK** on the touch screen to dismiss the error.

Check that the sending mail server (SMTP server) is correctly configured in the Remote UI mail server settings.

Setting Mail Server

If this does not resolve the error, check the status of the mail server.

Contact the mail server administrator to check the server settings and status.

3419

Cause

Communication with mail server failed.

What to Do

Tap **OK** on the touch screen to dismiss the error.

Check that the sending account and password are correctly configured in the Remote UI mail server settings.

Setting Mail Server

If this does not resolve the error, check the status of the mail server.

Contact the mail server administrator to check the server settings and status.

3420

Cause

Communication with mail server failed.

What to Do

Tap **OK** on the touch screen to dismiss the error.

Check that the receiving mail server (POP3 server) is correctly configured in the Remote UI mail server settings.

Setting Mail Server

If this does not resolve the error, check the status of the mail server.

Contact the mail server administrator to check the server settings and status.

3421

Cause

Communication with mail server failed.

What to Do

Tap **OK** on the touch screen to dismiss the error.

Check that the receiving account and password are correctly configured in the Remote UI mail server settings.

Setting Mail Server

If this does not resolve the error, check the status of the mail server.

Contact the mail server administrator to check the server settings and status.

3422

Cause

Communication with mail server failed.

What to Do

Tap **OK** on the touch screen to dismiss the error.

Check that the settings on the mail server and the APOP settings on this device match.

Check this device's APOP settings in **Remote UI**.

- Setting Mail Server

Contact the mail server administrator for configuring APOP on the mail server.

3423

Cause

Communication with mail server failed.

What to Do

Tap **OK** on the touch screen to dismiss the error.

Check if the Remote UI mail server settings are correct.

Setting Mail Server

If this does not resolve the error, check the status of the mail server.

Contact the mail server administrator to check the server settings and status.

3424

Cause

Sending mail failed.

What to Do

Tap **OK** on the touch screen to dismiss the error.

Specify the correct destination mail address and try again.

3448

Cause

IP address is conflicting.

What to Do

Tap **OK** on the touch screen to dismiss the error.

Check the network configuration and change the network configuration to prevent a conflict with other network devices.

For details on changing the network configuration, refer to the documentation for your network device.

4111

Cause

The media type specified is incompatible with this device.

What to Do

Tap **OK** on the touch screen to dismiss the error.

Check the media type settings, and then try again.

4113

Cause

Cannot print borderless for the following reasons.

- Printer driver is not set to **Fit Roll Paper Width**.
- Roll paper is not wide enough, or the paper is out of position.

What to Do

- **Stopping printing**

  Tap **Cancel** on the touch screen.

- **Replacing paper**

  Follow the steps below to replace the printer paper with paper that can be printed borderless.

  1. Tap **Replace the paper and print** on the touch screen, then remove the roll paper.

     - Removing the Roll from the Printer
     - Removing Rolls From the Roll Holder

  2. Replace the printer paper with paper that can be printed borderless.

     - Loading Rolls on the Roll Holder
     - Loading Rolls in the Printer

- **Printing with a border**

  Tap **Print with border** on the touch screen.

  Printing with a border is now enabled.

4114

Cause

The paper position is not suitable for borderless printing.

What to Do

- **Stopping printing**

  Tap **Cancel** on the touch screen.

- **Replacing paper**

  Follow the steps below to replace the printer paper with paper that can be printed borderless.

  1. Tap **Replace the paper and print** on the touch screen, then remove the roll paper.

     - Removing the Roll from the Printer
     - Removing Rolls From the Roll Holder

  2. Replace the printer paper with paper that can be printed borderless.

     - Loading Rolls on the Roll Holder
     - Loading Rolls in the Printer

- **Printing with a border**

  Tap **Print with border** on the touch screen.

  Printing with a border is now enabled.

Note

- Because paper expands or contracts depending on the environment of use, it may become narrower or wider than the supported width for borderless printing.

  Use each media type under the appropriate usage conditions. See the media information list for usage conditions.

  - Paper Information List

4115

Cause

The paper in the printer cannot be printed borderless.

What to Do

- **Stopping printing**

  Tap **Cancel** on the touch screen.

- **Replacing paper**

  Follow the steps below to replace the printer paper with paper that can be printed borderless.

  1. Tap **Replace the paper and print** on the touch screen, then remove the roll paper.

     - Removing the Roll from the Printer
     - Removing Rolls From the Roll Holder

  2. Replace the printer paper with paper that can be printed borderless.

     - Loading Rolls on the Roll Holder
     - Loading Rolls in the Printer

- **Printing with a border**

  Tap **Print with border** on the touch screen.

  Printing with a border is now enabled.

4116

Cause

The paper is loaded askew.

What to Do

- **Reloading paper**

  Tap **Replace the paper and print** on the touch screen, and then load the paper so that the edges are inside the borderless printing ink grooves.

  Insert the roll paper firmly until it is against the roll holder flange.

  Loading Rolls on the Roll Holder

- **Printing with a border**

  Tap **Print with border** on the touch screen.

  Printing with a border is now enabled.

- **Stopping printing**

  Tap **Cancel** on the touch screen to stop printing.

Note

- To force the printer to print, set **Detect paper setting mismatch** in the touch screen menu to **Do not detect**.

  However, note that this error may affect the printing quality.

4117

Cause

The print job received specifies a type or width of paper that is not compatible with borderless printing.

What to Do

- **Changing the print job settings**

  Follow these steps to change the settings of the print job to enable borderless printing.

  1. Tap **Cancel** on the touch screen to stop printing.
  2. Check that the printer driver for the printer has been selected, and then try again.

     See the media information list for media types compatible with borderless printing.

     Paper Information List

- **Printing with a border**

  Tap **Print with border** on the touch screen.

  Printing with a border is now enabled.

Note

- To force the printer to print, set **Detect paper setting mismatch** in the touch screen menu to **Do not detect**.

  However, note that this error may affect the printing quality.

4801

Cause

A printer error has occurred.

What to Do

Turn off the power, wait a moment, and then turn it back on.

If the error appears again, make a note of the detailed error code (ECxx-xxxx) that appears on the touch screen, and then turn off the power and contact a Canon customer service center.

Detailed error codes

EC01-2F90 EC01-2F95 EC04-2F31 EC05-2F92 EC06-2F9A EC06-2F9B EC06-2F9C EC0F-2F96 EC11-2F2A EC12-2F29 EC12-2F2B EC12-2F2C EC13-2F17 EC15-2E23 EC16-2021 EC16-2022 EC16-2027 EC16-202A EC16-2038 EC21-2F51 EC21-2F54 EC21-2F57 EC21-2F59 EC21-2F61 EC21-2F67 EC21-2F70 EC21-2F71 EC21-2F72 EC22-2F30 EC22-2F47 EC23-260E EC23-2F11 EC23-2F18 EC23-2F32 EC25-2F16 EC31-2F1C EC31-2F1D EC31-2F1E EC31-2F1F EC31-2F22 EC33-2601 EC33-2F3A EC33-2F3D EC33-2F3E EC34-2602 EC34-2F3B EC35-2603 EC35-2F3C EC51-2F14 EC51-2F15 EC51-2FDD EC51-2FDE EC51-2FDF EC51-3301 EC51-3302 EC51-3303 EC55-2F20 EC55-2F6C EC58-2F12

4803

Cause

Printer error has occurred.

What to Do

Turn off the power, wait a moment, and then turn it back on.

If the error appears again, make a note of the detailed error code (ECxx-xxxx) that appears on the touch screen, and then turn off the power and contact a Canon customer service center.

Detailed error codes

EC51-203C

4905

Cause

A printer error has occurred.

What to Do

Turn off the power, wait a moment, and then turn it back on.

If the error appears again, make a note of the detailed error code (ECxx-xxxx) that appears on the touch screen, and then turn off the power and contact a Canon customer service center.

Detailed error codes

EC51-3304 EC51-3306 EC51-3307 EC51-3308 EC51-3309 EC51-330A

4910

Cause

The width of the roll paper set in **Fit Roll Paper Width** in the printer driver is not the same as the width of the roll paper loaded in the printer.

What to Do

Tap **OK** on the touch screen to go to the next screen.

Check the media type and size that appear and tap **OK**.

- **Printing without changes**

  Tap **Print with the loaded paper.**.

  However, note that this error may cause paper jams and affect the printing quality.

- **Stopping printing**

  Tap **Cancel** on the touch screen or press the **Stop** button.

- **Replacing the roll paper**

  Follow the steps below to replace the paper with roll paper of the width set in the printer driver.

  1. Tap **Replace the paper and print**, then remove the roll paper.

     - Removing the Roll from the Printer
     - Removing Rolls From the Roll Holder

  2. Replace the paper with paper of the width set in the printer driver.

     - Loading Rolls on the Roll Holder
     - Loading Rolls in the Printer

     Printing begins.

Note

- To change print settings in Windows, select **Fit Roll Paper Width** in the printer driver and set the roll paper width in the dialog box that appears.
- To change print settings in macOS, open the printer driver and select **Fit Roll Paper Width**, and then set the roll paper width in that panel to the width of the paper loaded in the printer.

4911

Cause

The media type specified in the printer driver is not the same as the media type loaded in the printer.

What to Do

- **Changing the printer driver print settings**

  Follow the steps below to match the media type in the printer driver and the media type specified for the printer.

  1. Tap **Cancel** on the touch screen to stop printing.
  2. Change the media type in the printer driver settings to the media type loaded in the printer, and then try again.

- **Replacing paper**

  Follow the steps below to match the media type in the printer driver and the media type specified for the printer.

  1. Tap **Cancel** on the touch screen to stop printing.
  2. Load the paper with the media type set in the printer driver, and then try again.

     - Loading and Printing on Rolls
     - Loading and Printing on Sheets

- **Printing without changes**

  To continue printing, tap **Print with the loaded paper.** on the touch screen.

  However, note that this error may cause paper jams and affect the printing quality.

4913

Cause

Cannot print borderless for one of the following reasons.

- The paper size in the printer cannot be printed borderless.
- The paper is loaded askew.

What to Do

- **Replacing paper**

  Follow the steps below to replace the printer paper with paper that can be printed borderless.

  1. Tap **Replace the paper and print** on the touch screen, then remove the roll paper.

     - Removing the Roll from the Printer
     - Removing Rolls From the Roll Holder

  2. Replace the printer paper with paper that can be printed borderless.

     - Loading Rolls on the Roll Holder
     - Loading Rolls in the Printer

     Printing begins.

  Note

  See the media information list for media types compatible with borderless printing.

  - Paper Information List

- **Reloading paper**

  Tap **Replace the paper and print** on the touch screen, and then load the paper so that the edges are inside the borderless printing ink grooves.

  Insert the roll paper firmly until it is against the roll holder flange.

  - Loading Rolls on the Roll Holder

- **Printing with a border**

  Tap **Print with border** on the touch screen.

  Printing with a border is now enabled.

- **Stopping printing**

  Tap **Cancel** on the touch screen to stop printing.

4920

Cause

Cannot cut paper for one of the following reasons.

- Paper that has been cut remains on the output guide.
- There is a foreign object near the output slot that is obstructing the cutter blade.
- The paper is not being used under the recommended usage conditions.
- The paper in use cannot be used with **Automatic cut**.

What to Do

- **Paper that has been cut remains on the output guide**

  Follow the steps below to resume printing.

  1. Tip back the release lever and remove the paper.
     - Removing the Roll from the Printer
     - Removing Sheets
  3. Load the paper.
     - Loading Rolls in the Printer
     - Loading Sheets in the Printer
  3. If "**There is a job whose printing is not complete. Do you want to print this job?**" appears on the touch screen, tap **Yes**.

     Printing will resume, starting from the page on which the error occurred.

     - Loading Rolls in the Printer

- **A foreign object near the output slot is obstructing the cutter blade**

  Follow the steps below to resume printing.

  1. Open the top cover and remove any foreign objects.
  2. If "**There is a job whose printing is not complete. Do you want to print this job?**" appears on the touch screen, tap **Yes**.

     Printing will resume, starting from the page on which the error occurred.

- **Paper not being used under the recommended usage conditions**

  Every paper type has different recommended conditions of use. Use all paper under its recommended usage conditions.

  See the media information list for recommended usage conditions.

  - Paper Information List

- **The paper in use cannot be used with Automatic cut**

  Set the roll paper cutting method to **User cut** and cut the roll paper with a cutting implement such as scissors.

  - Specifying the Cutting Method for Rolls

See the media information list for paper types that can be used with **Automatic cut**.

- Paper Information List

If this does not apply, there may be a cutter blade malfunction.

Contact your Canon dealer for assistance.

4931

Cause

Paper feed adjustment may have failed for the following reasons.

- The paper for printing a test pattern is soiled. Otherwise, you have loaded colored paper.
- The printer may be exposed to strong light, such as direct sunlight, which can cause the sensors to malfunction.
- The test pattern was printed too faintly.

What to Do

Tap **OK** on the touch screen to dismiss the error, and then take the following actions.

- Load unused paper.
- Make adjustments to ensure that the printer is not exposed to strong light.
- Print a nozzle check pattern to check the print head status.

  If the pattern has gaps or horizontal white lines, the print head nozzle is blocked. Clean the print head.

  Checking for Nozzle Clogging

4932

Cause

The print head cannot be calibrated because the printer is loaded with very transparent film-type paper.

What to Do

Tap **OK** on the touch screen to dismiss the error.

We recommend calibrating the print head with a frequently used, non-film paper.

- Automatic Adjustment to Straighten Lines and Colors

4933

Cause

The print head nozzle may be blocked.

What to Do

Follow the steps below to repeat **Print head alignment**.

1. Tap **OK** on the touch screen to dismiss the error.
2. Print a test pattern to check the nozzles.

   Checking for Nozzle Clogging

3. If the nozzle is blocked, clean the print head.

   Cleaning the Print Head

4. Repeat **Print head alignment**.

   Automatic Adjustment to Straighten Lines and Colors

4934

Cause

The print head nozzle may be blocked.

What to Do

Follow the steps below to repeat **Print head alignment**.

1. Tap **OK** on the touch screen to dismiss the error.
2. Print a test pattern to check the nozzles.

   Checking for Nozzle Clogging

3. If the nozzle is blocked, clean the print head.

   Cleaning the Print Head

4. Repeat **Print head alignment**.

   Automatic Adjustment to Straighten Lines and Colors

4935

Cause

The print head nozzle may be blocked.

What to Do

Follow the steps below to repeat **Print head alignment**.

1. Tap **OK** on the touch screen to dismiss the error.
2. Print a test pattern to check the nozzles.

   Checking for Nozzle Clogging

3. If the nozzle is blocked, clean the print head.

   Cleaning the Print Head

4. Repeat **Print head alignment**.

   Automatic Adjustment to Straighten Lines and Colors

4937

Cause

Print head position adjustment failed.

What to Do

Tap **OK** on the touch screen to dismiss the error and retry **Print head alignment** following the steps below.

1. Print a test pattern to check the nozzles.

   Checking for Nozzle Clogging

2. If the nozzle is blocked, clean the print head.

   Cleaning the Print Head

3. Retry **Print head alignment**.

   Automatic Adjustment to Straighten Lines and Colors

If any print head nozzles are still blocked, replace the print head.

Replacing the Print Head

If the error appears again, the printer may be damaged. Contact a Canon customer service center.

4950

Cause

WPS (Push button method) connection failed.

What to Do

Follow the instructions on the touch screen to try connecting to the wireless LAN router again.

4951

Cause

AOSS (BUFFALO) connection failed.

What to Do

Follow the instructions on the touch screen to try connecting to the wireless LAN router again.

4952

Cause

Failed to connect to the wireless LAN router.

What to Do

Follow the instructions on the touch screen to try connecting to the wireless LAN router again.

4953

Cause

Failed to acquire IP address.

What to Do

Check the information that appears on the touch screen, and then try connecting again.

4954

Cause

Failed to set up wireless LAN using Easy wireless connect.

What to Do

Tap **OK** on the touch screen to dismiss the error, and then configure the settings again.

4955

Cause

IPv4/IPv6 settings were changed, but wired LAN and wireless LAN are disabled.

What to Do

Tap **OK** on the touch screen to dismiss the error, and then enable wired LAN or wireless LAN.

4956

Cause

Attempted to change LAN settings, but they cannot be changed for the following reasons.

- Printer is operating
- Printer currently being configured using **Remote UI**

What to Do

Tap **OK** on the touch screen to dismiss the error, exit other processes and then configure the settings again.

4957

Cause

Raku Raku WLAN Start (NEC) connection failed.

What to Do

Tap **OK** on the touch screen to dismiss the error and try connecting again.

5106

Cause

A printer error has occurred.

What to Do

Make a note of the detailed error code (ECxx-xxxx) that appears on the touch screen, and then turn off the power and unplug the power cord.

Contact your Canon dealer for assistance.

Detailed error codes

EC03-4061

5200

Cause

A printer error has occurred.

What to Do

Turn off the power and unplug the power cord.

Wait a moment and turn the power back on.

If the error appears again, make a note of the detailed error code (ECxx-xxxx) that appears on the touch screen, and then contact a Canon customer service center.

Detailed error codes

EC21-2F7E

5B16

Cause

A printer error has occurred.

What to Do

Make a note of the detailed error code (ECxx-xxxx) that appears on the touch screen, and then turn off the power and unplug the power cord.

Contact your Canon dealer for assistance.

Detailed error codes

EC22-4001

5B20

Cause

A printer error has occurred.

What to Do

Make a note of the detailed error code (ECxx-xxxx) that appears on the touch screen, and then turn off the power and unplug the power cord.

Contact your Canon dealer for assistance.

Detailed error codes

EC25-4001 EC41-4001 EC43-4001 EC44-4001 EC47-4001

5B21

Cause

A printer error has occurred.

What to Do

Make a note of the detailed error code (ECxx-xxxx) that appears on the touch screen, and then turn off the power and unplug the power cord.

Contact your Canon dealer for assistance.

Detailed error codes

EC48-4001

5C00

Cause

A printer error has occurred.

What to Do

Make a note of the detailed error code (ECxx-xxxx) that appears on the touch screen, and then turn off the power and unplug the power cord.

Contact your Canon dealer for assistance.

Detailed error codes

EC31-4001

6502

Cause

A printer error has occurred.

What to Do

Turn off the power and unplug the power cord.

Wait a moment and turn the power back on.

If the error appears again, make a note of the detailed error code (ECxx-xxxx) that appears on the touch screen, and then contact a Canon customer service center.

Detailed error codes

EC56-2FE0

6700

Cause

A printer error has occurred.

What to Do

Make a note of the detailed error code (ECxx-xxxx) that appears on the touch screen, and then turn off the power and unplug the power cord.

Contact your Canon dealer for assistance.

Detailed error codes

EC57-404F

6702

Cause

A printer error has occurred.

What to Do

Make a note of the detailed error code (ECxx-xxxx) that appears on the touch screen, and then turn off the power and unplug the power cord.

Contact your Canon dealer for assistance.

Detailed error codes

EC57-4040

6820

Cause

A printer error has occurred.

What to Do

Make a note of the detailed error code (ECxx-xxxx) that appears on the touch screen, and then turn off the power and unplug the power cord.

Contact your Canon dealer for assistance.

Detailed error codes

EC07-4060 EC51-4041 EC51-4042 EC51-4045 EC51-4046 EC51-4047 EC51-404C EC51-404D EC51-404E EC51-4070 EC51-4071 EC51-4072

6900

Cause

A printer error has occurred.

What to Do

Turn off the power and unplug the power cord.

Wait a moment and turn the power back on.

If the error appears again, make a note of the detailed error code (ECxx-xxxx) that appears on the touch screen, and then contact a Canon customer service center.

Detailed error codes

EC51-3000

6901

Cause

A printer error has occurred.

What to Do

Turn off the power and unplug the power cord.

Wait a moment and turn the power back on.

If the error appears again, make a note of the detailed error code (ECxx-xxxx) that appears on the touch screen, and then contact a Canon customer service center.

Detailed error codes

EC51-3001

6902

Cause

A printer error has occurred.

What to Do

Turn off the power and unplug the power cord.

Wait a moment and turn the power back on.

If the error appears again, make a note of the detailed error code (ECxx-xxxx) that appears on the touch screen, and then contact a Canon customer service center.

Detailed error codes

EC51-3006

6910

Cause

A printer error has occurred.

What to Do

Turn off the power and unplug the power cord.

Wait a moment and turn the power back on.

If the error appears again, make a note of the detailed error code (ECxx-xxxx) that appears on the touch screen, and then contact a Canon customer service center.

Detailed error codes

EC51-3002

6911

Cause

A printer error has occurred.

What to Do

Turn off the power and unplug the power cord.

Wait a moment and turn the power back on.

If the error appears again, make a note of the detailed error code (ECxx-xxxx) that appears on the touch screen, and then contact a Canon customer service center.

Detailed error codes

EC51-3003

6920

Cause

A printer error has occurred.

What to Do

Turn off the power and unplug the power cord.

Wait a moment and turn the power back on.

If the error appears again, make a note of the detailed error code (ECxx-xxxx) that appears on the touch screen, and then contact a Canon customer service center.

Detailed error codes

EC51-3004

6921

Cause

A printer error has occurred.

What to Do

Turn off the power and unplug the power cord.

Wait a moment and turn the power back on.

If the error appears again, make a note of the detailed error code (ECxx-xxxx) that appears on the touch screen, and then contact a Canon customer service center.

Detailed error codes

EC51-3005

6930

Cause

A printer error has occurred.

What to Do

Turn off the power and unplug the power cord.

Wait a moment and turn the power back on.

If the error appears again, make a note of the detailed error code (ECxx-xxxx) that appears on the touch screen, and then contact a Canon customer service center.

Detailed error codes

EC51-3100

6931

Cause

A printer error has occurred.

What to Do

Turn off the power and unplug the power cord.

Wait a moment and turn the power back on.

If the error appears again, make a note of the detailed error code (ECxx-xxxx) that appears on the touch screen, and then contact a Canon customer service center.

Detailed error codes

EC51-3101

6932

Cause

A printer error has occurred.

What to Do

Turn off the power and unplug the power cord.

Wait a moment and turn the power back on.

If the error appears again, make a note of the detailed error code (ECxx-xxxx) that appears on the touch screen, and then contact a Canon customer service center.

Detailed error codes

EC51-3102

6933

Cause

A printer error has occurred.

What to Do

Turn off the power and unplug the power cord.

Wait a moment and turn the power back on.

If the error appears again, make a note of the detailed error code (ECxx-xxxx) that appears on the touch screen, and then contact a Canon customer service center.

Detailed error codes

EC51-3103

6940

Cause

A printer error has occurred.

What to Do

Turn off the power and unplug the power cord.

Wait a moment and turn the power back on.

If the error appears again, make a note of the detailed error code (ECxx-xxxx) that appears on the touch screen, and then contact a Canon customer service center.

Detailed error codes

EC51-3104

6941

Cause

A printer error has occurred.

What to Do

Turn off the power and unplug the power cord.

Wait a moment and turn the power back on.

If the error appears again, make a note of the detailed error code (ECxx-xxxx) that appears on the touch screen, and then contact a Canon customer service center.

Detailed error codes

EC51-3105

6942

Cause

A printer error has occurred.

What to Do

Turn off the power and unplug the power cord.

Wait a moment and turn the power back on.

If the error appears again, make a note of the detailed error code (ECxx-xxxx) that appears on the touch screen, and then contact a Canon customer service center.

Detailed error codes

EC51-3106

6943

Cause

A printer error has occurred.

What to Do

Turn off the power and unplug the power cord.

Wait a moment and turn the power back on.

If the error appears again, make a note of the detailed error code (ECxx-xxxx) that appears on the touch screen, and then contact a Canon customer service center.

Detailed error codes

EC51-3107

6944

Cause

A printer error has occurred.

What to Do

Turn off the power and unplug the power cord.

Wait a moment and turn the power back on.

If the error appears again, make a note of the detailed error code (ECxx-xxxx) that appears on the touch screen, and then contact a Canon customer service center.

Detailed error codes

EC51-3108

6945

Cause

A printer error has occurred.

What to Do

Turn off the power and unplug the power cord.

Wait a moment and turn the power back on.

If the error appears again, make a note of the detailed error code (ECxx-xxxx) that appears on the touch screen, and then contact a Canon customer service center.

Detailed error codes

EC51-3109

6946

Cause

A printer error has occurred.

What to Do

Turn off the power and unplug the power cord.

Wait a moment and turn the power back on.

If the error appears again, make a note of the detailed error code (ECxx-xxxx) that appears on the touch screen, and then contact a Canon customer service center.

Detailed error codes

EC51-3110

7050

Cause

A printer error has occurred.

What to Do

Make a note of the detailed error code (ECxx-xxxx) that appears on the touch screen, and then turn off the power and unplug the power cord.

Contact your Canon dealer for assistance.

Detailed error codes

EC51-5001

7051

Cause

A printer error has occurred.

What to Do

Make a note of the detailed error code (ECxx-xxxx) that appears on the touch screen, and then turn off the power and unplug the power cord.

Contact your Canon dealer for assistance.

Detailed error codes

EC51-5002

7052

Cause

A printer error has occurred.

What to Do

Make a note of the detailed error code (ECxx-xxxx) that appears on the touch screen, and then turn off the power and unplug the power cord.

Contact your Canon dealer for assistance.

Detailed error codes

EC51-5003

8200

Cause

A printer error has occurred.

What to Do

Make a note of the detailed error code (ECxx-xxxx) that appears on the touch screen, and then turn off the power and unplug the power cord.

Contact your Canon dealer for assistance.

Detailed error codes

EC24-4049 EC24-404A EC24-404B

9000

Cause

A printer error has occurred.

What to Do

Make a note of the detailed error code (ECxx-xxxx) that appears on the touch screen, and then turn off the power and unplug the power cord.

Contact your Canon dealer for assistance.

Detailed error codes

EC51-2F07

9110

Cause

A printer error has occurred.

What to Do

Make a note of the detailed error code (ECxx-xxxx) that appears on the touch screen, and then turn off the power and unplug the power cord.

Contact your Canon dealer for assistance.

Detailed error codes

EC52-4038 EC52-4039

B20A

Cause

A printer error has occurred.

What to Do

Make a note of the detailed error code (ECxx-xxxx) that appears on the touch screen, and then turn off the power and unplug the power cord.

Contact your Canon dealer for assistance.

Detailed error codes

EC03-403A

B510

Cause

A printer error has occurred.

What to Do

Make a note of the detailed error code (ECxx-xxxx) that appears on the touch screen, and then turn off the power and unplug the power cord.

Contact your Canon dealer for assistance.

Detailed error codes

EC32-4001