Canon

PUB. DIE-0533-000B

XA50
XA55

4K Camcorder

Instruction Manual
PAL

Highlights of the Camcorder

The Canon XA55 / XA50 4K Camcorder is a high-performance camcorder whose compact size makes it ideal in a variety of situations. The following are just some of the many functions featured in the camcorder.

4K Recording

Advanced sensor and image processor

At the heart of the camcorder is the type 1.0 single plate CMOS sensor with an 8,290,000 effective pixel count, and the DIGIC DV 6 imaging platform. Thanks to its advanced high-sensitivity and noise reduction technology, the camcorder can shoot nuanced images with little noise even in low-light situations.

XF-AVC and MP4 formats

You can choose the video format according to your workflow needs. You can record in XF-AVC format or MP4 format. Both formats use the MPEG-4 AVC/H.264 codec, but XF-AVC clips are recorded as Material eXchange Format (MXF files), compatible with all major non-linear (NLE) editing software.

Wide zoom lens

The camcorder features a 15x optical zoom lens with a focal length at full wide angle of 25.5 mm* (35 mm equivalent), offering superb wide-angle shooting capability.

* Except when using Dynamic IS.

Convenience and Functionality

Emphasis on versatility

This camcorder has features to make it usable as a main camera but is also small enough to be very portable. The advanced image stabilization (📖 60) will let you shoot in a variety of situations in the field. The handle unit is removable so you can attach it to enjoy additional audio options and infrared functionality, or remove it when you need improved portability.

Manual controls at your fingertips

The focus/zoom ring helps you achieve the focus you are looking for. You can easily change the ring's functionality so that you can operate the zoom. You can also assign certain frequently used functions to a customizable button and adjust those functions with the accompanying dial (📖 93). Additionally, the camcorder also features 5 assignable buttons on the camcorder and one onscreen assignable touch button to which you can assign a variety of functions to access them with ease (📖 94).

Infrared recording

Record in darkness using infrared recording (📖 88). With the built-in infrared light on the handle unit, you can record nocturnal animals in their natural environment or other such scenes.

SD card recording options

The camcorder can record 4K video in MP4 or XF-AVC format on an SD card. It is equipped with 2 SD card slots, allowing you to use dual recording to record the same clip on two SD cards, or relay recording to automatically switch to the other SD card when the one being used is full (📖 34).

Time code options (📖 74)

The time code generated by the camcorder can be output from the SDI OUT terminal (**XA55** only) or HDMI OUT terminal in order to synchronize it with other external devices. A user bit code (📖 76) can also be output with the output signal.

Dual Pixel CMOS AF

The camcorder features Dual Pixel CMOS AF technology for improved autofocus functions (📖 47). In addition to continuous AF, AF-boosted MF lets you focus manually most of the way and let the camcorder finish focusing automatically. With AF-boosted MF the camcorder does not perform unreliable focus adjustments, resulting in a more stable focusing operation than with continuous AF. The camcorder can also focus automatically on people's faces and track moving subjects while keeping them in focus (📖 53). Furthermore, the camcorder can be in manual focus but switch to autofocus when a face is detected (face-only AF), ensuring that important subjects are in focus (📖 54).

Dual Pixel Focus Guide (📖 49)

The focus guide serves as a visual, intuitive guide that you can use to check if the image is in focus and the required adjustment, if it is not. This can be very helpful to ensure you always get amazingly sharp 4K video.

Software for aiding production workflow

Canon XF Utility (📖 113) lets you copy the clips you recorded from an SD card to a computer, play back the clips and organize them. You can also use the Canon XF plugins to work with the clips directly from Avid non-linear editing (NLE) software.
Additionally, MP4 Join Tool (📖 113) is a small application that lets you join MP4 clips that were split into multiple files.

Creativity and Artistic Expression

Special recording modes

When you make recordings, you can change the recording frame rate to achieve a fast or slow motion effect (📖 46). Alternatively, you can use pre-recording to record 3 seconds before you press the button, helping you capture those hard-to-catch opportunities (📖 87).

Looks (📖 73)

You can adjust various aspects of the picture, such as the color depth, sharpness and brightness, to create a desired "look". If you prefer, you can use one of the preset looks offered. The [2 Neutral] look for example produces a more natural perceived resolution, while the [3 Wide DR] look applies a gamma curve with a very wide dynamic range and an appropriate color matrix.

Other Features

- Battery packs compatible with Intelligent System for better remaining usage time information.
- Compatibility with the optional GP-E2 GPS Receiver to geotag your recordings (📖 90).
- Compatibility with the optional RC-V100 Remote Controller when you need a professional level of remote operation (📖 89).

Table of Contents

1. Introduction 7

About this Manual 7
- Conventions Used in this Manual 7
- Before Using the Camcorder 8

Supplied Accessories 9

Names of Parts 10
- Camcorder 10
- Handle Unit 15
- WL-D89 Wireless Controller 16

2. Preparations 17

Preparing the Power Supply 17
- Attaching the Ferrite Core 17
- Charging a Battery Pack 17

Preparing the Camcorder 20
- Attaching the Handle Unit 20
- Attaching the Lens Hood 21
- Using the LCD Screen 22
- Using the Viewfinder 22
- Adjusting the Grip Belt and Using Straps 23
- Wireless Controller 24

Basic Operation of the Camcorder 25
- Turning the Camcorder On and Off 25
- Changing the Camcorder's Operating Mode 26

Date, Time and Language Settings 27
- Setting the Date and Time 27
- Changing the Language 28
- Changing the Time Zone 28

Using the Menus 29
- Setup Menus 29
- FUNC Menu 30

Using SD Cards 32
- Compatible SD Cards 32
- Inserting and Removing an SD Card 33
- Initializing an SD Card 33
- Selecting the SD Card for Recordings 34
- Dual Recording and Relay Recording 34
- Recovering Clips 35

3. Recording 37

Recording Video and Photos 37
- Recording 37
- Reviewing the Latest Clip Recorded 39
- Setting the File Name for XF-AVC Clips 39
- Onscreen Displays 41

Video Configuration: Video Format, Resolution, Bit Rate and Frame Rate 44
- Selecting the Video Format 44
- Selecting the Resolution and Bit Rate 44
- Selecting the Frame Rate 44

Slow & Fast Motion Recording 46

Adjusting the Focus 47
- Manual Focus 47
- AF-Boosted MF 51
- Continuous AF 52
- Changing the AF Frame Size 52
- Face Detection & Tracking 53

Zooming 55
- Using the Focus/Zoom Ring 55
- Using the Grip Zoom Rocker 55
- Using the Handle Zoom Rocker 57
- Using the Supplied Wireless Controller or an Optional Remote Controller 57
- Using the Touch Screen’s Zoom Controls 58
- Digital Tele-Converter 58

Image Stabilization 60
- Dynamic IS or Standard IS 60
- Powered IS 60

Automatic Gain Control (AGC) Limit 62

Shooting Modes 63
- Special Scene Modes 63

Adjusting the Exposure 65
- Manual Exposure (**M**) 65
- Automatic Exposure: Programmed AE (**P**) 66
- Automatic Exposure: Shutter Priority (**Tv**) 66
- Automatic Exposure: Aperture Priority (**Av**) 66
- Touch Exposure 67
- Exposure Lock (AE Lock) 67
- Exposure Compensation 68
- Backlight Correction 68
- Zebra Pattern 69

ND Filter 70

White Balance 71

Using Looks 73
Setting the Time Code 74
Selecting the Time Code Mode 74
Setting the User Bit 76
Recording Audio 77
Selecting the Audio Format of MP4 Clips 77
Audio Settings and Recorded Audio Channels 78
Connecting an External Microphone or External Audio Input Source to the Camcorder 79
Recording Audio from the INPUT Terminals to CH1/CH2 79
Recording Audio from the Built-In Microphone or MIC Terminal to CH1/CH2 80
Adjusting the Audio Recording Level 81
Advanced Audio Input Settings 83
Using Headphones 85
Color Bars/Audio Reference Signal 86
Color Bars 86
Audio Reference Signal 86
Pre-Recording 87
Infrared Recording 88
Using the Optional RC-V100 Remote Controller 89
Using the Optional GP-E2 GPS Receiver 90

4. Customization 93

CUSTOM Dial and Button 93
Assignable Buttons 94
Assignable functions 95
Saving and Loading Menu Settings 96
Saving Menu Settings 96
Loading Menu Settings 96

5. Playback 97

Playback 97
The Playback Index Screen 97
Changing the Index Screen 97
Playing Back Recordings 98
Playback Controls 99
Adjusting the Volume 99
Displaying Clip Information 100
Clip and Photo Operations 101
Deleting Clips and Photos 101
Trimming MP4 Clips 102
Copying Clips and Photos 103

6. External Connections 105

Video Output Configuration 105
Video Output Configuration (Recording) 105
Video Output Configuration (Playback) 106
Connecting to an External Monitor 107
Connection Diagram 107
XA55 Using the SDI OUT Terminal 107
Using the HDMI OUT Terminal 108
Selecting the Video Output's Scan Mode 109
Audio Output 110
Selecting the Audio Channels for Headphone or Speaker Output 110
Selecting the Audio Channels for HDMI Output 111

7. Saving Clips 113

Working with Clips on a Computer 113
Saving MP4 Clips 113
Saving XF-AVC Clips 113

8. Additional Information 115

Menu Options 115
FUNC menu in CAMERA mode 115
FUNC menu in MEDIA mode 116
Setup Menus 116
Troubleshooting 123
List of Messages 126
Safety Instructions and Handling Precautions 129
Maintenance/Others 133
Optional Accessories 134
Specifications 136
Reference Tables 139
Approximate Recording Time on an SD Card 139
Charging Times 139
Approximate Usage Times with a Fully Charged Battery Pack 139
Index 141

1 Introduction

About this Manual

Thank you for purchasing the Canon XA55 / XA50. Please read this manual carefully before you use the camcorder and retain it for future reference. Should the camcorder fail to operate correctly, refer to *Troubleshooting* (📖 123).

Conventions Used in this Manual

- ❗ IMPORTANT: Precautions related to the camcorder's operation.
- ⓘ NOTES: Additional topics that complement the basic operating procedures.
- 📖: Reference page number within this manual.
- **XA55**: Text and/or illustrations that apply only to the model indicated in the icon.
- The following terms are used in this manual:
  "Screen" refers to the LCD screen and the viewfinder screen.
  "Card" refers to an SD, SDHC or SDXC card.
  "Clip" refers to a single movie unit recorded with a single recording operation (for example, from the point when the REC button is pressed to start recording until it is pressed again to stop).
- Photographs in the manual are simulated pictures taken with a still camera. Unless indicated otherwise, illustrations refer to the **XA55**.
- Some screenshots in this manual have been simplified to make them easier to read.
- Operating mode icons: A shaded icon (like CAMERA) indicates that the function described can be used in the operating mode or video format shown; a non-shaded icon (like MEDIA) indicates that the function cannot be used.

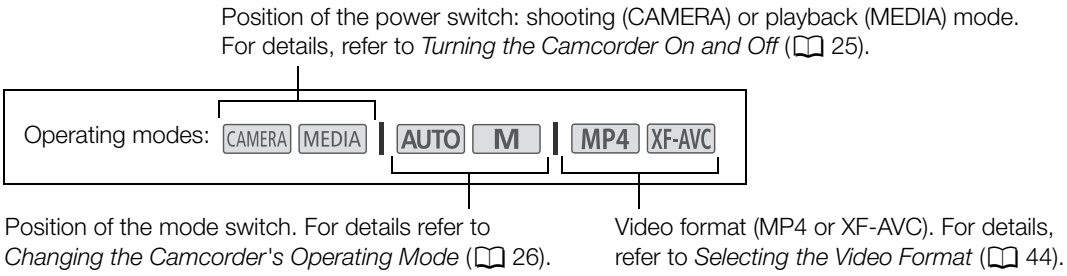

- The following style is used to represent menu selections. For a detailed explanation on how to use the menus, refer to *Using the Menus* (📖 29). For a summary of all available menu options and settings, refer to *Menu Options* (📖 115).

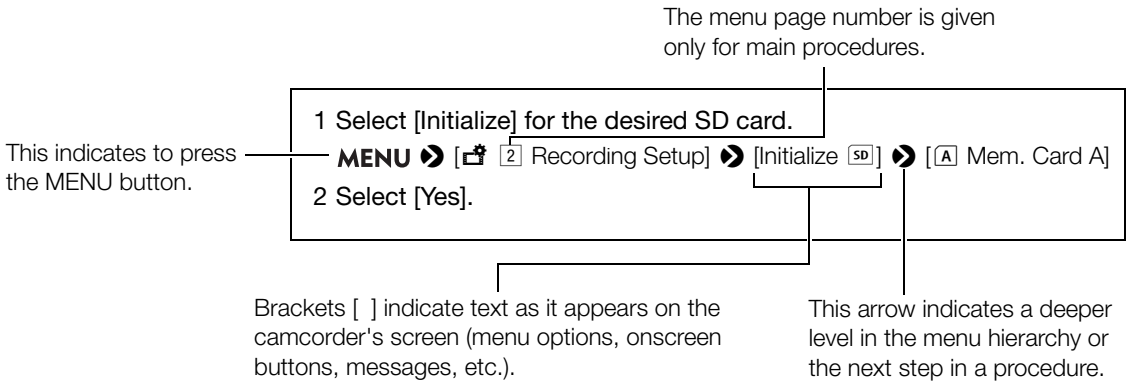

Before Using the Camcorder

- Before making important recordings for the first time, make test recordings using the video configuration(s) you plan to use to check that the camcorder operates correctly. Should the camcorder fail to operate correctly, refer to *Troubleshooting* (📖 123).
- **Copyright notice:** Unauthorized recording of copyrighted materials may infringe on the rights of copyright owners and be contrary to copyright laws.
- **About the LCD and viewfinder screens:** The screens are produced using extremely high-precision manufacturing techniques, with more than 99.99% of the pixels operating to specification. Very rarely, pixels may misfire or light up permanently. This has no effect on the recorded image and does not constitute a malfunction.

IMPORTANT

- Observe the following precautions while the ACCESS indicator (📖 12) is illuminated or flashing in red. Failing to do so may result in permanent data loss.
  - Do not disconnect the power source or turn off the camcorder.
  - Do not open the card compartment cover.
  - Do not change the camcorder’s operating mode.
  - When a USB cable is connected to the camcorder, do not disconnect the USB cable.

Supplied Accessories

The following accessories are supplied with the camcorder:

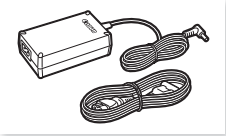

CA-570 Compact Power Adapter (incl. power cord)

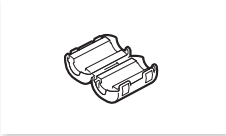

Ferrite Core

BP-820 Battery Pack

Handle unit (incl. screws)

Microphone holder unit (incl. screws)

Lens hood with lens barrier

Lens cap

WL-D89 Wireless Controller (incl. CR2025 lithium button battery)

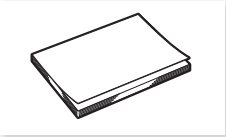

Quick Guide

Names of Parts

Camcorder

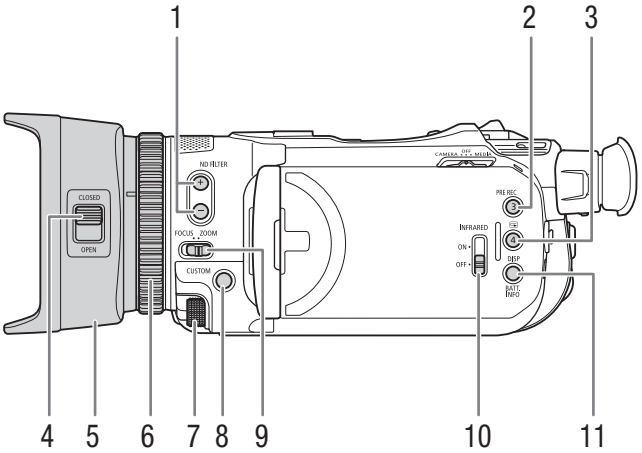

1 ND FILTER +/– buttons (📖 70)
2 PRE REC (pre-recording) button (📖 87)/ Assignable button 3 (📖 94)
3 (review recording) button (📖 39)/ Assignable button 4 (📖 94)
4 Lens barrier switch (📖 37)
5 Lens hood (📖 21)
6 Focus/Zoom ring (📖 47, 55)
7 CUSTOM (customizable) dial (📖 93)
8 CUSTOM (customizable) button (📖 93)
9 Focus/Zoom ring switch (📖 47, 55)
10 INFRARED switch (📖 88)
11 DISP (onscreen display) button (📖 41)/ BATT. INFO (battery information) button (📖 19)

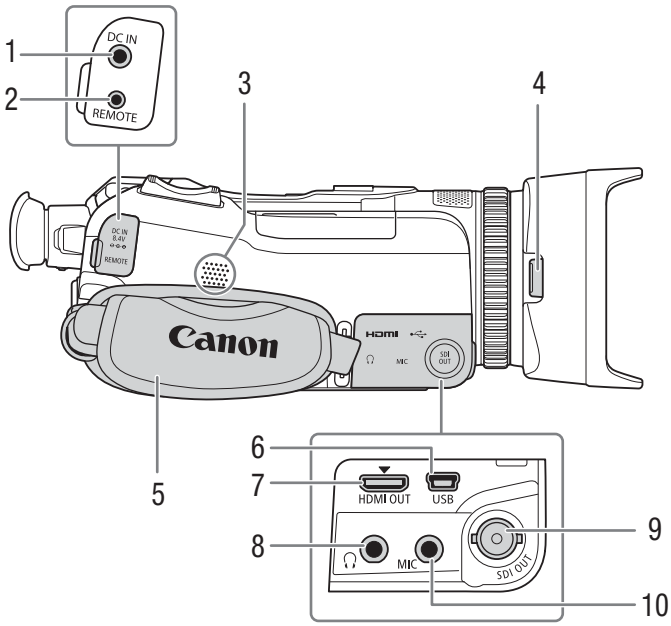

1 DC IN terminal (📖 17)
2 REMOTE terminal
For connecting the optional RC-V100 Remote Controller (📖 89) or commercially available remote controllers.
3 Built-in speaker (📖 99)
4 Lens hood release button (📖 21)
5 Grip belt (📖 23)
6 USB terminal (📖 90)
7 HDMI OUT terminal (📖 107, 108)
8 🎧 (headphones) terminal (📖 85, 110)
9 **XA55** SDI OUT terminal (📖 107)
10 MIC terminal (📖 79)

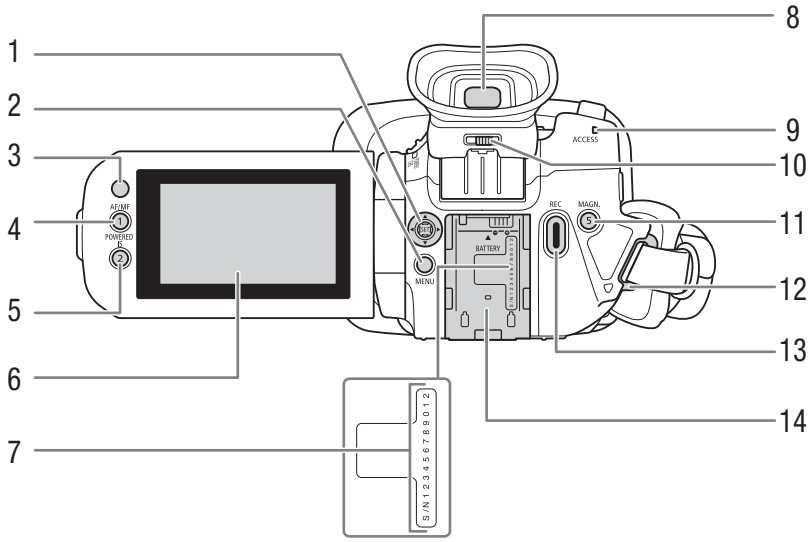

1 Joystick/SET button (📖 29)
2 MENU button (📖 29)
3 Remote sensor (📖 24)
4 AF/MF button (📖 47)/
Assignable button 1 (📖 94)
5 POWERED IS button (📖 60)/
Assignable button 2 (📖 94)
6 LCD touch screen (📖 22)
7 Serial number
8 Viewfinder (📖 22)
9 ACCESS (card access) indicator (📖 8, 37)
10 Dioptric adjustment lever (📖 22)
11 MAGN. (magnification) button (📖 50)/
Assignable button 5 (📖 94)
12 Strap mount (📖 23)
13 REC (start/stop recording video) button (📖 37)
14 Battery attachment unit (📖 17)

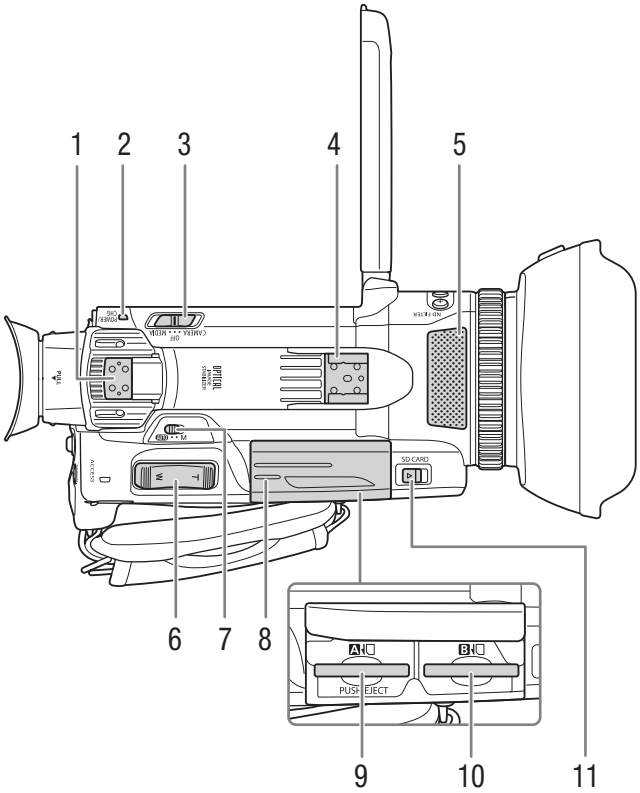

1 Handle attachment unit (📖 20)
2 POWER/CHG (battery charging) indicator (📖 17)
3 Power switch (📖 25)
4 Cold shoe/Handle attachment unit (📖 20)
5 Built-in stereo microphone (📖 77)
6 Grip zoom rocker (📖 55)
7 Mode switch (📖 26)
8 Card compartment cover (📖 33)
9 SD card slot **A**
10 SD card slot **B**
11 SD CARD (open the card compartment cover) switch (📖 33)

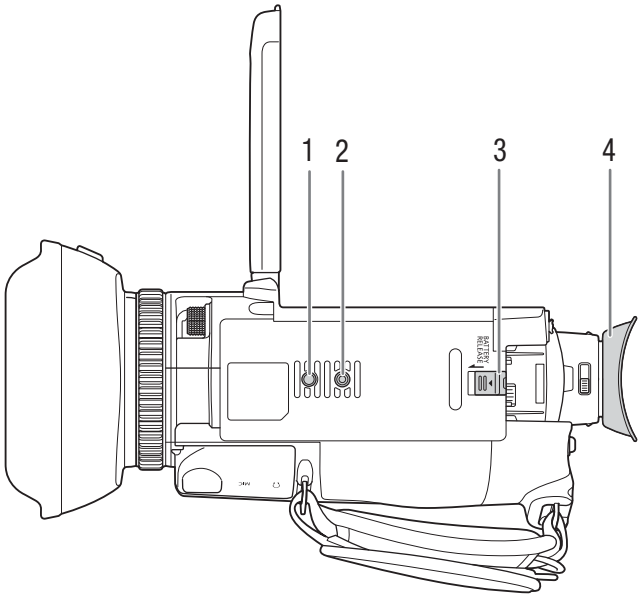

1 Socket for tripod's anti-rotation pin
2 Tripod socket
For use with tripods with a mounting screw up to 6 mm long
3 BATTERY RELEASE switch (📖 18)
4 Eye cup (📖 22)

Handle Unit

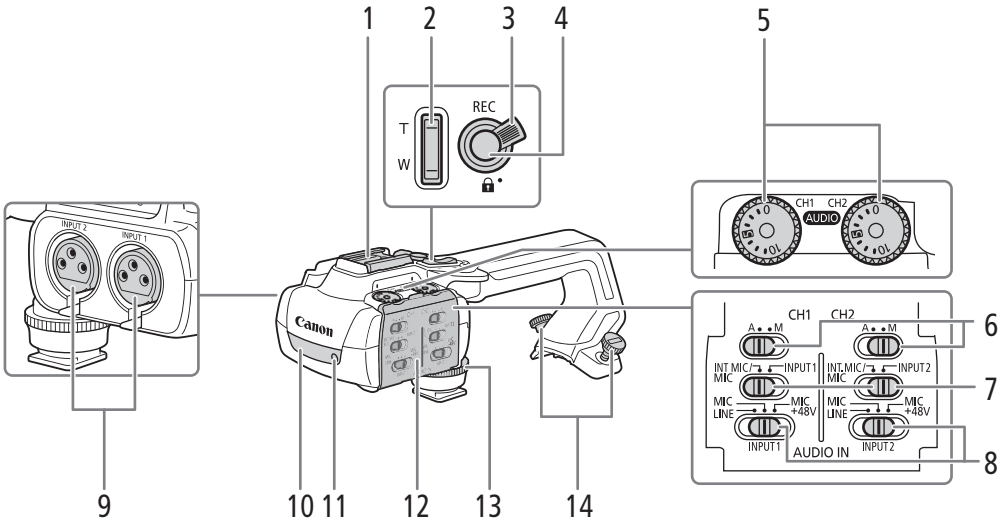

1 Cold shoe
2 Handle zoom rocker (📖 57)
3 REC button's lock (🔒) lever (📖 38)
4 REC (start/stop recording video) button (📖 37)
5 Audio level dials: for CH1 (left) and CH2 (right) (📖 82)
6 Audio level switches: for CH1 (left) and CH2 (right) (📖 81)
7 AUDIO IN switches (audio input selection): for CH1 (left) and CH2 (right) (📖 79, 80)
8 INPUT 1 (left) / INPUT 2 (right) switches (audio source selection) (📖 79)
9 INPUT terminals: INPUT 1 (right), INPUT 2 (left) (📖 79)
10 Infrared light (📖 88)
11 Tally lamp (📖 38)
12 Audio controls cover (📖 81)
13 Handle unit front screw (📖 20)
14 Handle unit rear screws (📖 20)

Microphone Holder Unit (📖 20, 79)

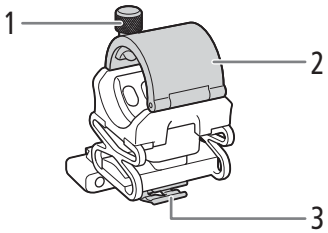

1 Microphone lock screw
2 Microphone holder
3 Microphone cable clamp

WL-D89 Wireless Controller

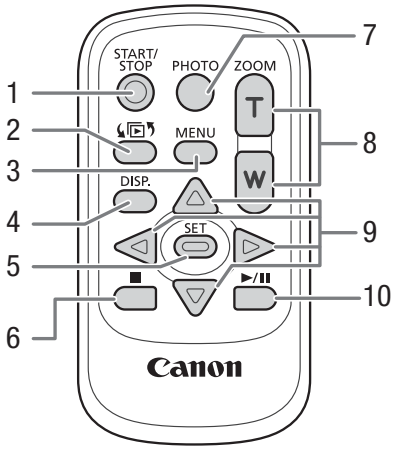

1 START/STOP button (📖 37)
Same as the REC button on the camcorder, used to start/stop recording video.
2 (open the index selection screen) button (📖 97)
3 MENU button (📖 29)
4 DISP. (onscreen display) button (📖 41)
5 SET button (📖 29)
6 ■ (stop) button (📖 98)
7 PHOTO button (📖 38)
8 Zoom buttons (📖 57)
9 Navigation buttons (▲/▼/◀/▶)
10 ▶/❚❚ (play/pause) button (📖 98)

Preparing the Power Supply

You can power the camcorder using a battery pack or directly using the supplied compact power adapter. If you connect the compact power adapter to the camcorder while a battery pack is attached, the camcorder will draw power from the power outlet.

Attaching the Ferrite Core

Attach the enclosed ferrite core before you connect the compact power adapter to the camcorder.

1 Attach the ferrite core to the cable about 6 cm from the DC plug (the plug to be connected to the DC IN terminal).

2 Pass the cable through the center of the core and wrap it around the core (as shown in the illustration), then close the unit until it clicks shut.

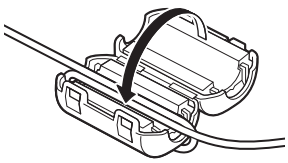

Charging a Battery Pack

You can power the camcorder using the supplied BP-820 Battery Pack or the optional BP-828 Battery Pack. Both battery packs are compatible with Intelligent System so you can check the approximate remaining battery usage time (in minutes) on the screen. For more accurate readings, when using a battery pack for the first time, charge it fully and then use the camcorder until the battery pack is completely depleted.

1 Connect the compact power adapter to the camcorder and plug the power cord into a power outlet.

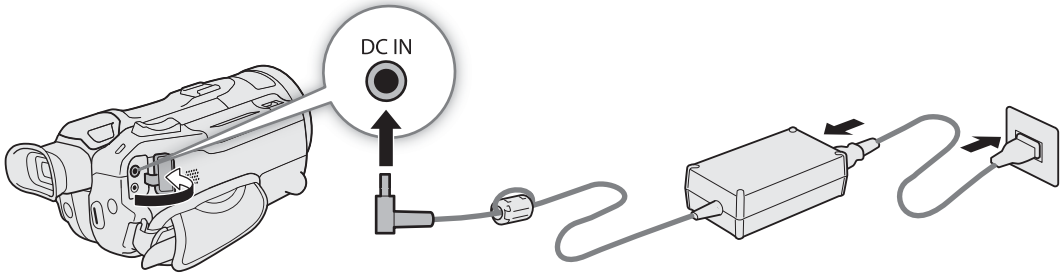

2 Attach the battery pack to the camcorder.

3 Charging will start when the camcorder is turned off.

- The POWER/CHG (charge) indicator will illuminate in red while the battery is charging. If the POWER/CHG indicator starts flashing, refer to *Troubleshooting* (124).

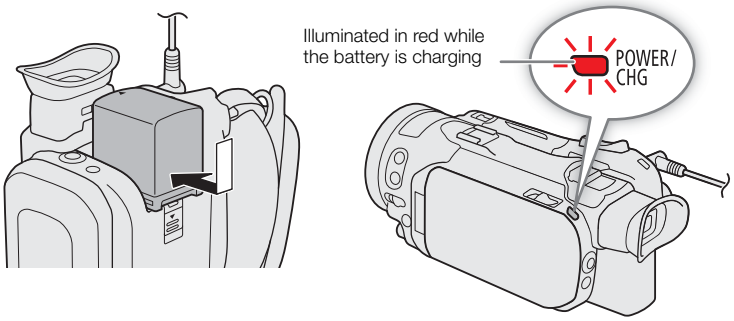

4 When the POWER/CHG indicator goes out, the battery is fully charged.

- Disconnect the compact power adapter from the camcorder and unplug the power cord.

To remove the battery pack

1 Slide the BATTERY RELEASE switch in the direction of the arrow and hold it pressed down.

2 Slide the battery pack down and then pull it out.

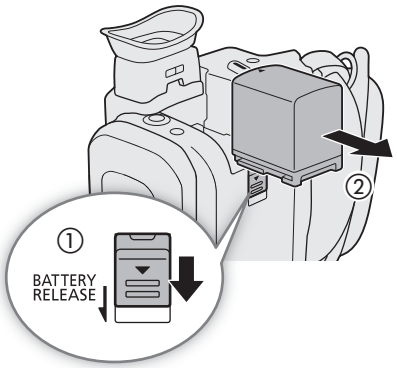

IMPORTANT

- Do not connect to the compact power adapter any product that is not expressly recommended for use with this camcorder.
- Turn off the camcorder before connecting or disconnecting the compact power adapter. After you turn off the camcorder, important data is updated on the SD card. Be sure to wait until the green POWER/CHG indicator goes out.
- When using the compact power adapter, do not fix it permanently to one place as this may cause a malfunction.
- To prevent equipment breakdowns and excessive heating, do not connect the supplied compact power adapter to voltage converters for overseas travels or special power sources such as those on aircraft and ships, DC-AC inverters, etc.

NOTES

- We recommend charging the battery pack in temperatures between 10 °C and 30 °C. If either the ambient temperature or the battery pack's temperature is outside the range of approx. 0 °C to 40 °C, charging will not start.
- The battery pack will be charged only when the camcorder is off.
- If the power supply was disconnected while charging a battery pack, make sure the POWER/CHG indicator has gone out before restoring the power supply.

- If remaining battery time is an issue, you can power the camcorder using the compact power adapter so the battery pack will not be consumed.
- Charged battery packs continue to discharge naturally. Therefore, charge them on the day of use, or the day before, to ensure a full charge.
- We recommend that you prepare battery packs to last 2 to 3 times longer than you think you might need.
- For handling precautions regarding the battery pack, refer to *Safety Instructions and Handling Precautions* (📖 129). For charging times and approximate usage times, refer to *Reference Tables* (📖 139).

Checking the Remaining Battery Charge

With the camcorder turned off, press the BATT. INFO button to display for about 5 seconds a screen showing the approximate battery charge level. Note that if the battery charge is too low, the battery information screen may not appear.

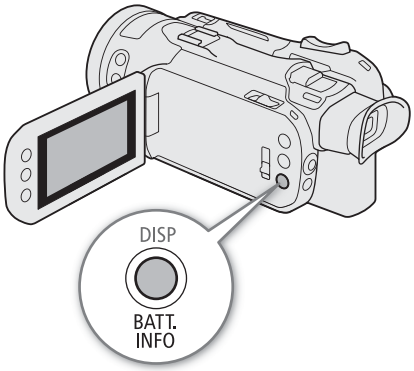

Preparing the Camcorder

This section covers basic preparations for the camcorder such as attaching the handle unit and lens hood, and adjusting the viewfinder and LCD screen.

IMPORTANT

- Be careful not to drop the camcorder when attaching, removing or adjusting the various accessories. Using a table or other stable surface is recommended.

Attaching the Handle Unit

The camcorder is functional even if you remove the handle unit. However, to use the INPUT terminals (□ 79), infrared light (□ 88) and tally lamp (□ 37), the handle unit must be correctly attached to the camcorder.

1 Attach the microphone holder unit to the handle unit.
- Use a commercially available Phillips head ("crosshead") screwdriver and the two supplied screws.

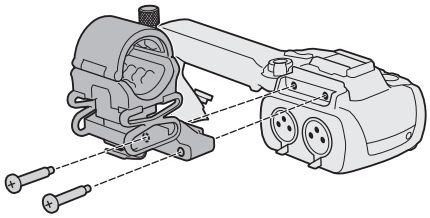

2 Align the handle unit with the handle attachment unit and then slide the handle unit forward all the way.

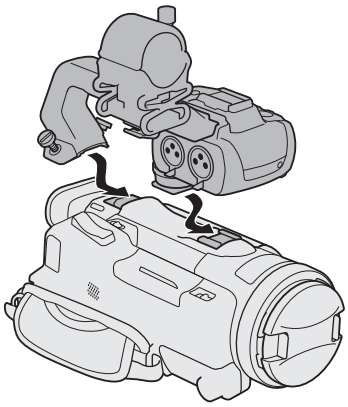

3 Firmly tighten the front and rear screws.
- To tighten the rear screws you can use a coin or similar object.

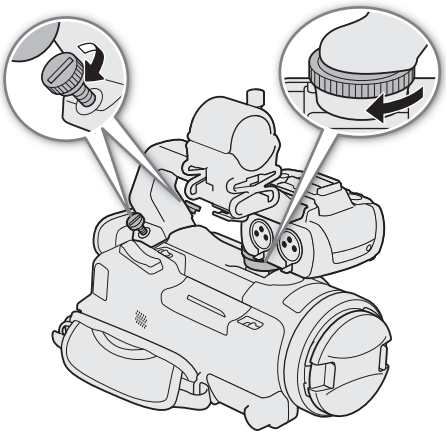

Attaching the Lens Hood

While recording, the supplied lens hood with lens barrier is effective for reducing stray light that can be the cause of lens flare and ghost images. Additionally, closing the lens barrier can help prevent fingerprints and dirt accumulation on the lens.

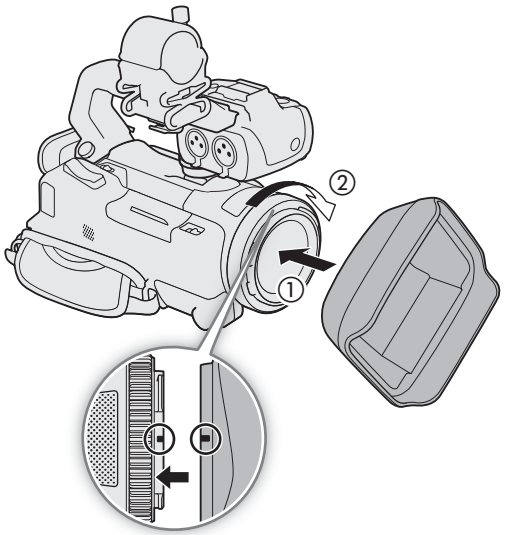

1 Remove the lens cap.

2 Align the groove on the lens hood with the index mark on the top of the lens (①), and then turn the lens hood clockwise until it stops with a click (②).
- Be careful not to deform the lens hood.
- Make sure that the lens hood is aligned with the thread.

To remove the lens hood

1 Press and hold the lens hood release button and turn the lens hood counterclockwise.

2 Place the lens cap back on the lens.

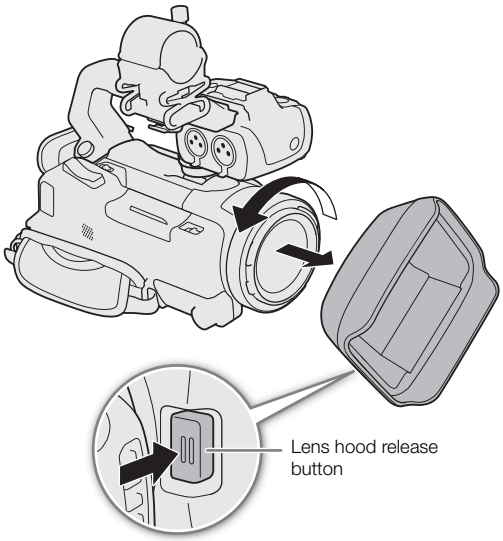

NOTES

About the lens cap:
- Use the supplied lens cap when carrying the camcorder or storing it after use.
- The lens cap and lens hood cannot be used simultaneously. To attach the lens hood, remove the lens cap in advance.

Using the LCD Screen

Open the LCD panel 90 degrees and adjust the viewing angle.

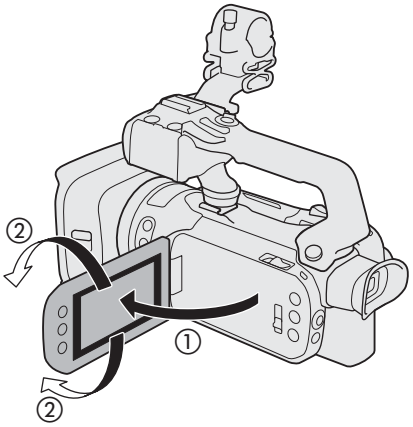

NOTES

- You can adjust the brightness of the LCD screen with the MENU ➤ [Display Setup] ➤ [LCD Brightness] and [LCD Backlight] settings. When the camcorder is on, you can also press and hold the DISP button for more than 2 seconds to change the [LCD Backlight] setting between bright and normal or from dim to normal.
- Adjusting the brightness does not affect the brightness of recordings.
- Using a brighter setting will shorten the effective usage time of the battery pack.
- When the LCD panel is rotated 180 degrees toward the subject, you can use the MENU ➤ [Display Setup] ➤ [LCD Mirror Image] setting to flip the screen's image horizontally so it shows a mirror image of the subject.
- For details about how to take care of the LCD screen, refer to *Safety Instructions and Handling Precautions* (📖 129), *Cleaning* (📖 133).

Using the Viewfinder

Adjust the position of the viewfinder to a comfortable angle. You can also adjust the diopter, if necessary.

1 Turn on the camcorder (📖 25) and close the LCD panel.

2 Pull out the viewfinder and adjust the viewing angle.

3 Adjust the viewfinder using the dioptric adjustment lever.

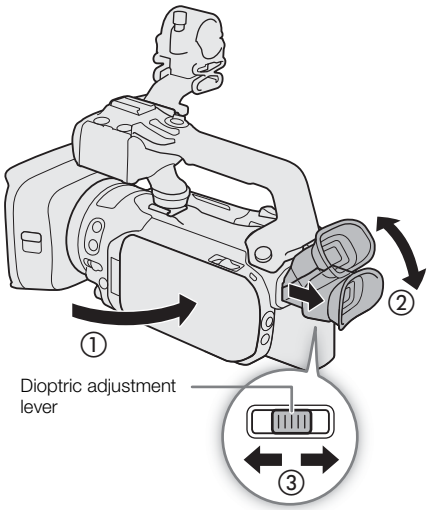

NOTES

- The viewfinder and LCD screen cannot be used simultaneously. To use the viewfinder, make sure to close the LCD panel and pull out the viewfinder.
- You can adjust the brightness of the viewfinder with the MENU ➤ [Display Setup] ➤ [Viewfinder Backlight] setting.
- Make sure you keep the eye cup attached when using the camcorder.
  If you wear glasses, you may find the viewfinder easier to use if you flip back the outer edge of the eye cup toward the camcorder body.

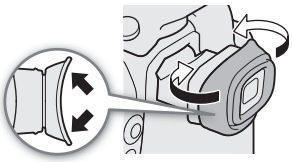

Adjusting the Grip Belt and Using Straps

Fasten the grip belt.

- Adjust the grip belt so that you can reach the grip zoom rocker with your index finger, and the REC button with your thumb.

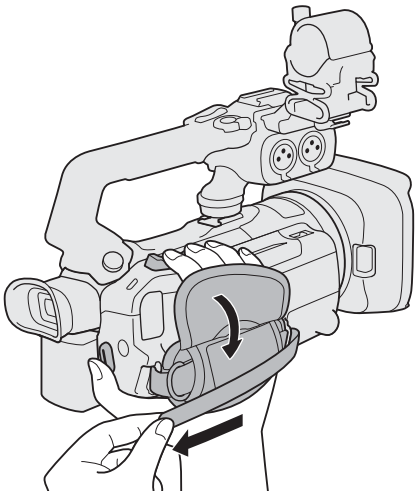

To attach an optional WS-20 Wrist Strap

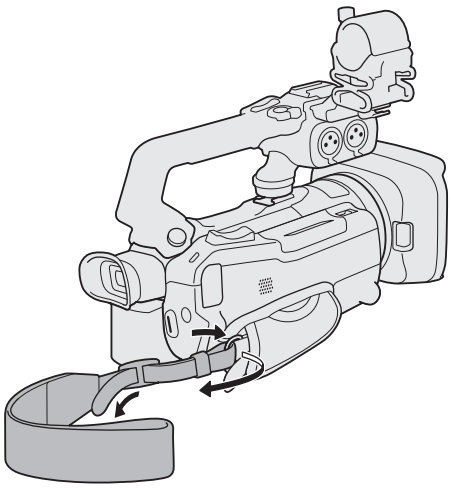

To attach an optional SS-600/SS-650 Shoulder Strap

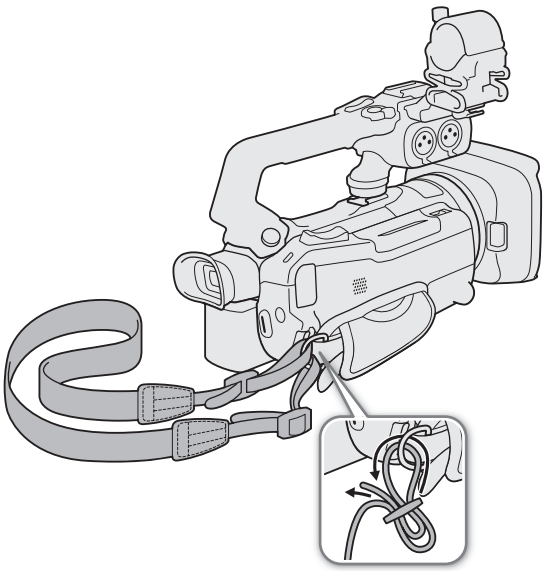

Wireless Controller

First, insert the supplied CR2025 lithium button battery into the wireless controller.

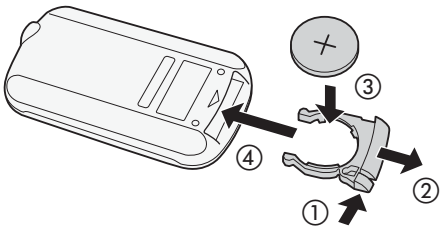

1 Press the tab in the direction of the arrow (①) and pull out the battery holder (②).

2 Place the lithium button battery with the + side facing up (③).

3 Insert the battery holder (④).

To use the wireless controller

Point the wireless controller at the camcorder's remote sensor when you press the buttons.

- You can rotate the LCD panel 180 degrees to use the wireless controller from the front of the camcorder.

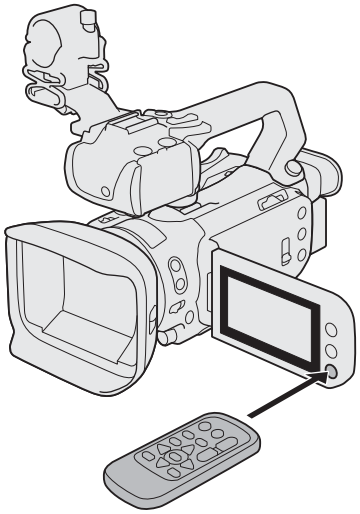

NOTES

- When the camcorder cannot be operated with the wireless controller, or when it can only be operated at very close range, replace the battery.
- The wireless controller may not work properly when the remote sensor is situated under strong light sources or direct sunlight.

Basic Operation of the Camcorder

Turning the Camcorder On and Off

The camcorder has two operating modes: CAMERA (CAMERA) mode for making recordings or MEDIA (MEDIA) mode for playing back recordings. Select the operating mode using the power switch.

To turn on the camcorder

Set the power switch to CAMERA for CAMERA mode (📖 37) or MEDIA for MEDIA mode (📖 97).

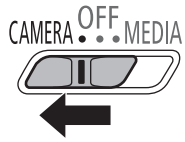

CAMERA mode

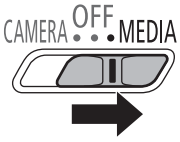

MEDIA mode

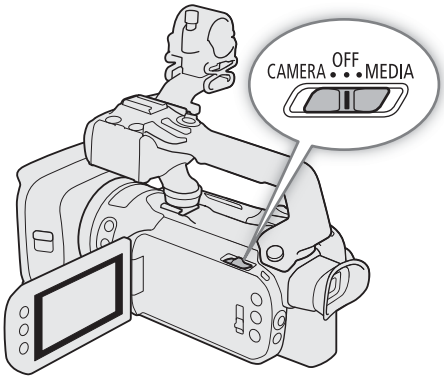

To turn off the camcorder

Set the power switch to OFF.

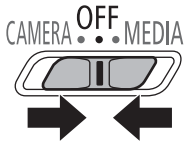

NOTES

- When you turn on the camcorder, the POWER/CHG indicator will illuminate in green. You can set MENU ➤ [System Setup] ➤ [POWER LED] to [OFF Off] so the power indicator does not illuminate.

Changing the Camcorder's Operating Mode

When making recordings, you can change the camera mode to match your shooting style (📖 37).

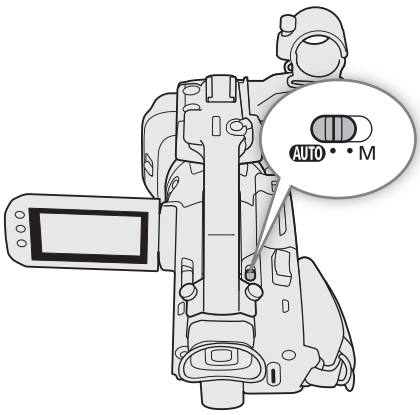

AUTO (Auto) mode

Set the mode switch to AUTO. With this mode, the camcorder takes care of all the settings while you concentrate on recording. This operating mode is suitable if you just prefer not to bother with detailed camcorder settings.

M (Manual) mode

Set the mode switch to **M**. With this mode, you can enjoy full access to menus, settings and advanced functions.

Date, Time and Language Settings

Setting the Date and Time

You will need to set the date and time of the camcorder before you can start using it. The [Date/Time] screen will appear automatically when the camcorder's clock is not set.

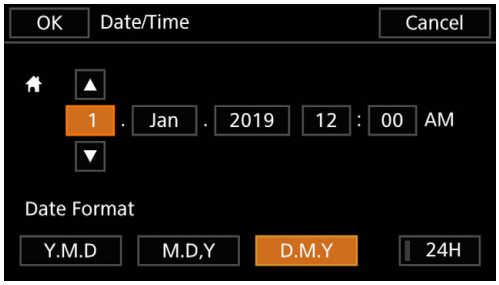

Operating modes: CAMERA MEDIA | AUTO M | MP4 XF-AVC

1 Turn on the camcorder.
- The [Date/Time] screen will appear.

2 Touch a field you want to change (year, month, day, hours or minutes).
- You can also push the joystick (◀▶) to move between the fields.

3 Touch [▲] or [▼] to change the field as necessary.
- You can also push the joystick (▲▼) to change the field.

4 Set the correct date and time by changing all the fields in the same way.

5 Touch [Y.M.D], [M.D,Y] or [D.M.Y] to select the date format you prefer.
- You can also push the joystick to select the desired button and press SET to confirm. The same is true for the rest of the steps in this procedure.
- In some screens, the date will be displayed in short form (numbers instead of month names or only the day and month), but it will still follow the order you selected.

6 Touch [24H] to use 24-hour clock or leave it unselected to use 12-hour clock (AM/PM).

7 Touch [OK] to start the clock and close the setup screen.

NOTES

- With the following settings, you can change the time zone, date and time also after the initial setup. You can also change the date format and clock format (12 or 24 hours).
  - MENU ➤ [System Setup] ➤ [Time Zone/DST]
  - MENU ➤ [System Setup] ➤ [Date/Time]
- When you do not use the camcorder for about 3 months, the built-in backup battery may be depleted completely and the date and time setting may be lost. In such case, recharge the built-in backup battery (📖 131) and set the time zone, date and time again.
- Using the optional GP-E2 GPS Receiver, you can have the camcorder adjust settings automatically according to the UTC date/time information received from the GPS signal (📖 90).

Changing the Language

The default language of the camcorder is English. You can set it to one of 27 languages.
Refer to *Setup Menus* (📖 29) for details on how to navigate the menu to complete this procedure.

Operating modes: CAMERA MEDIA | AUTO M | MP4 XF-AVC

1 Select [Language 🗨].
  MENU ➤ [🔧 1 System Setup] ➤ [Language 🗨]
2 Select the desired language and then select [OK].
3 Select [✕] to close the menu.

Changing the Time Zone

Change the time zone to match your location. The default setting is Paris. In addition, the camcorder is able to retain the date and time of an additional location. This is convenient when you travel so that you can set the camcorder to match the time of your home location or that of your travel destination.
Refer to *Setup Menus* (📖 29) for details on how to navigate the menu to complete this procedure.

Operating modes: CAMERA MEDIA | AUTO M | MP4 XF-AVC

1 Select [Time Zone/DST].
  MENU ➤ [🔧 1 System Setup] ➤ [Time Zone/DST]
2 Select [🏠] to set the home time zone, or [✈] to set the time zone of your destination when you are traveling.
3 Select [◀] or [▶] to set the desired time zone. If necessary, select [☀] to adjust for daylight saving time.
4 Select [✕] to close the menu.

Using the Menus

The camcorder's functions can be adjusted from the setup menus, accessed by pressing the MENU button, or from the FUNC menu, accessed by touching or selecting the onscreen [FUNC] button. For details about the available menu options and settings, refer to *Menu Options* (115).

Operating modes: CAMERA MEDIA | AUTO M | MP4 XF-AVC

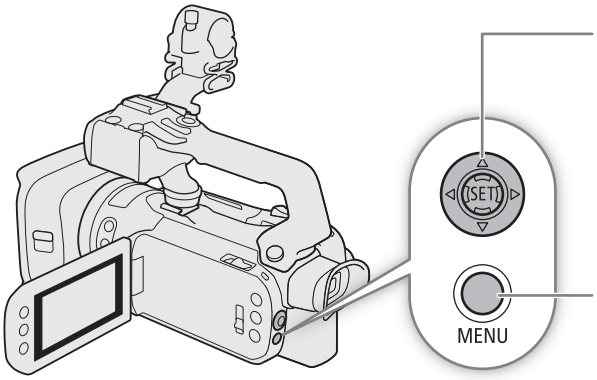

Joystick/SET button
When making a menu selection, push the joystick to move the orange selection frame in the menu. Then, press the joystick itself (in the manual, "press SET") to select the menu item indicated by the orange selection frame.

MENU button
Press the button to open the setup menus and then press again to close the menu after adjusting desired settings.

Setup Menus

Following is a step-by-step explanation of how to select a typical option from the setup menus. Some menu items may require additional steps. Such operations will be explained in the respective section of the manual.
For brevity's sake, references to menu settings throughout the manual may be abbreviated as follows:
MENU ➤ [1 System Setup] ➤ [Language] ➤ Desired option

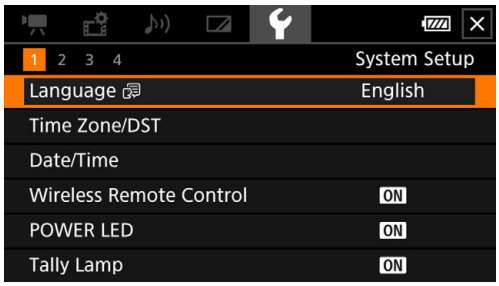

To use the touch panel

1 Press the MENU button.

2 Touch the icon of the desired setup menu from the top row.
- In the example, the icon, corresponding to the [System Setup] menu.

3 Touch the desired menu item ([Language], in the example).
- If the desired menu item does not appear in the menu page displayed, drag your finger left/right to scroll through other menu pages.
- For main procedures, the page number may be given in the manual (1, in the example). If you know the page number, you can touch the number icon at the top left of the screen to open directly the desired menu page.
- The page number may differ depending on the camcorder's operating mode. Throughout the manual, procedures for functions that can be used in both modes give the page number in CAMERA mode.

4 Touch the desired setting option and then touch [✕] to close the menu.
- You can touch [↩] to return to the previous menu page.

To use the joystick

1 Press the MENU button.

2 Push the joystick (◀▶) to select the icon of the desired setup menu.
- In the example, the icon, corresponding to the [System Setup] menu.
- If one of the icons in the top row is not selected when you open the menu, first push the joystick (▲▼) to move the orange selection frame to one of the icons.

3 Push the joystick (▲▼) to select the desired menu item ([Language], in the example) and then press SET.
- If the desired menu item does not appear in the menu page displayed, push the joystick (◀▶) to scroll through other menu pages.
- For main procedures, the page number may be given in the manual (1, in the example), making it easier to find the desired menu page.

4 Push the joystick (▲▼) to select the desired setting option and then press SET.

5 Press the MENU button to close the menu.
- You can push the joystick to highlight the [↩] button and press SET to return to the previous menu page. You can also highlight the [✕] button and press SET to close the menu.

NOTES
- You can press the MENU button on the supplied wireless controller to display the setup menus.
- Touching [✕] or pressing the MENU button at any time closes the menu.
- Unavailable items may appear grayed out.

FUNC Menu

In CAMERA mode, the FUNC menu offers a quick way to control various shooting related functions such as white balance, exposure, focus, etc. Available functions are more limited in AUTO mode.

To use the touch panel

1 Touch [FUNC] on the shooting screen.

2 Touch the icon of the desired function on the left column.
- If necessary, touch [∧]/[∨] to scroll up/down.

3 Touch the icon of the desired setting on the bottom row.

4 Touch [✕] to close the FUNC menu or [↩] to return to the left column.

FUNC menu in M mode

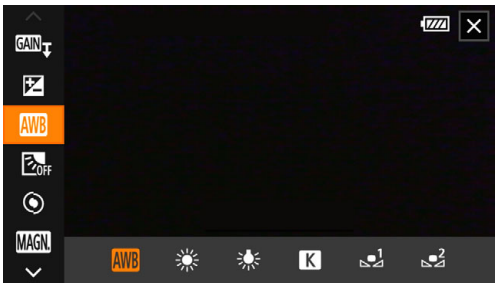

To use the joystick

1 On the shooting screen, push the joystick to select [FUNC] and then press SET.

2 Push the joystick (▲▼) to select the desired icon from the left column and then press SET.

3 Push the joystick (◀▶) to select the desired icon from the bottom row and then press SET.
- To select a value from an adjustment dial, first push the joystick (▼) to highlight the dial in orange and then (◀▶) to select the desired value.

4 Select [✕] to close the FUNC menu or [↩] to return to the left column.

NOTES

- Depending on the selected function, other buttons, adjustment dials, and other controls may appear on the screen. These are explained in the respective section of the manual.

Using SD Cards

The camcorder records clips and photos on commercially available Secure Digital (SD) cards*. The camcorder has two SD card slots and you can use two SD cards (in the manual, "SD card A" and "SD card B") to record on both simultaneously or to automatically switch to the other SD card when the SD card in use is full (📖 34).
Initialize SD cards (📖 33) when you use them with this camcorder for the first time.

* The SD card is used also to save menu settings files.

Compatible SD Cards

The following types of SD cards[1] can be used with this camcorder. For the latest information about SD cards tested for use with this camcorder, visit your local Canon website.

SD card type:	SD cards	SDHC cards	SDXC cards
SD Speed Class[2]:	CLASS 6	CLASS 10	
UHS Speed Class[2]:	1 Speed Class U1	3 Speed Class U3	

[1] As of March 2019, the clip recording function has been tested using SD cards made by Panasonic, Toshiba and SanDisk.
[2] UHS and SD Speed Class are standards that indicate the minimum guaranteed data transfer rate of SD cards.
To record 4K clips with a resolution of 3840x2160 (📖 44) or using slow & fast motion recording (📖 46), we recommend using SD cards rated UHS Speed Class U3. To record XF-AVC clips, we recommend using SD cards rated SD Speed Class 10 or UHS Speed Class U1 or U3.

IMPORTANT

- After repeatedly recording, deleting and editing clips (if the SD card is fragmented), you may notice slower writing speeds to the card and recording may even stop. In such case, save your recordings and initialize the card with the camcorder. Be sure to initialize SD cards especially before shooting important scenes.
- **About SDXC cards:** You can use SDXC cards with this camcorder but SDXC cards are initialized by the camcorder using the exFAT file system.
  - When using exFAT-formatted cards with other devices (digital recorders, card readers, etc.), make sure that the external device is compatible with exFAT. For more information on compatibility, contact the computer, operating system or card manufacturer.
  - If you use exFAT-formatted cards with a computer OS that is not exFAT-compatible, you may be prompted to format the card. In such case, **cancel the operation to prevent data loss**.

NOTES

- Proper operation cannot be guaranteed for all SD cards.

Inserting and Removing an SD Card

1 Turn off the camcorder.
- Make sure the POWER/CHG indicator is off.

2 Open the card compartment cover.
- Slide the SD CARD switch all the way in the direction of the arrow to open the cover.

3 Insert the card straight, with the label facing the grip belt side of the camcorder all the way into one of the card slots until it clicks.
- You can use two cards, one in each card slot.
- To remove a card, make sure the ACCESS indicator is off and then push the card once to release it. When the card springs out, pull it all the way out.

4 Close the card compartment cover.
- Do not force the cover closed if the card is not correctly inserted.

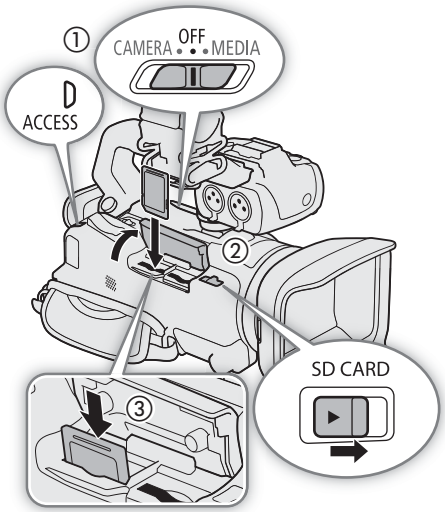

ACCESS (card access) indicator

SD card access indicator	Card status
Red (on or flashing)	Accessing the card(s).
Off	Neither card is being accessed or no cards are inserted in the camcorder.

If you set MENU ➤ [System Setup] ➤ [ACCESS LED] to [OFF Off], the ACCESS indicator will not illuminate.

IMPORTANT
- Turn off the camcorder before inserting or removing a card. Inserting or removing a card with the camcorder on may result in permanent data loss.
- SD cards have front and back sides that are not interchangeable. Inserting a card facing the wrong direction can cause a malfunction of the camcorder. Be sure to insert the card as described in step 3.

NOTES
- SD cards have a physical switch to prevent writing on the card so as to avoid the accidental erasure of the card's content. To write-protect the SD card, set the switch to the LOCK or 🔒 position.

Initializing an SD Card

Initialize SD cards when you use them with this camcorder for the first time. You can also initialize a card to permanently delete all the recordings it contains.

Operating modes: CAMERA MEDIA | AUTO M | MP4 XF-AVC

1 Select [Initialize] for the desired SD card.
MENU ➤ [2 Recording Setup] ➤ [Initialize SD] ➤ [A Mem. Card A] or [B Mem. Card B] ➤ [Initialize]

2 Select [Yes].

3 When the confirmation message appears, select [OK] and then [✕].

IMPORTANT

- Initializing a card will permanently erase all recordings. Lost data cannot be recovered. Make sure you save important recordings in advance (📖 113).
- Depending on the card, the initialization may take up to a few minutes.

Selecting the SD Card for Recordings

You can select the card on which clips and photos will be recorded.

Operating modes: CAMERA MEDIA | AUTO M | MP4 XF-AVC

1 Select [Recording Media].
MENU ➤ [2 Recording Setup] ➤ [Recording Media]

2 Select the desired SD card ([A Mem. Card A] or [B Mem. Card B]) for recording clips ([Rec Media for Movies]) and/or photos ([Rec Media for Photos]).

3 Select [✕].
- After closing the menu, the icon of the SD card selected for recording clips will appear on the screen.

Dual Recording and Relay Recording

The camcorder features two convenient recording methods that can be used when both card slots contain a card: dual recording and relay recording.

Dual recording: This function records the same clip simultaneously to both cards, which is a convenient way to make a backup copy of your recordings while you record.

Relay recording: This function allows you to continue recording on the other card without interruption when the card you are using becomes full.

Operating modes: CAMERA MEDIA | AUTO M | MP4 XF-AVC

1 Select [Dual/Relay Recording].
MENU ➤ [2 Recording Setup] ➤ [Dual/Relay Recording]

2 Select [Dual Recording] or [A Relay Recording] (or [B Relay Recording]) and then select [✕].
- When dual recording is activated, the status of both cards will appear at the top right of the screen. When relay recording is activated, the card icon will change to A (or B).
- Select [Standard Recording] to not use either function.

NOTES

- If a card becomes full during dual recording, recording on both cards will stop. On the other hand, if an error occurs with one of the cards, recording will continue on the other card.
- After saving to a computer MP4 relay clips that were originally recorded on different SD cards, you can use **MP4 Join Tool** to join the files and save them as a single clip (📖 113).
- Relay recording is available from SD card slot A to SD card slot B, and vice versa, but the switch will be performed only once.
- Dual recording and relay recording cannot be used together with slow & fast motion recording.

Recovering Clips

Some actions, such as suddenly turning off the camcorder or removing the SD card while data is being recorded, can cause data errors in the recorded clip. You may be able to recover clips with corrupted data with the following procedure.

Operating modes: CAMERA MEDIA | AUTO M | MP4 XF-AVC

1 Open the index screen with the clip you wish to recover (📖 97).

2 Select the corrupted clip (a clip with the ? icon instead of a thumbnail image).

3 When prompted to recover the data, select [Yes].
- The camcorder will attempt to recover the corrupted data.

4 When the confirmation message appears, select [OK].

ⓘ NOTES
- In the index screen, recovered MP4 clips appear with a special playback icon instead of the usual thumbnail.
- This procedure may delete clips shorter than 0.5 seconds in length.
- In some cases, it may not be possible to recover the data. This is more likely when the file system is corrupted or the card is physically damaged.
- Only clips recorded with this camcorder can be recovered. Photos cannot be recovered.

Recording Video and Photos

This section explains the basics of recording clips* and photos. For details on recording audio, refer to *Recording Audio* (📖 77).

* "Clip" refers to a single movie unit recorded with a single recording operation.

Operating modes: CAMERA MEDIA | AUTO M | MP4 XF-AVC

Recording

When you use AUTO mode to shoot video and take photos, the camcorder will automatically adjust various settings for you. In M mode, you can manually adjust the focus, exposure and many other settings according to your needs and preferences.

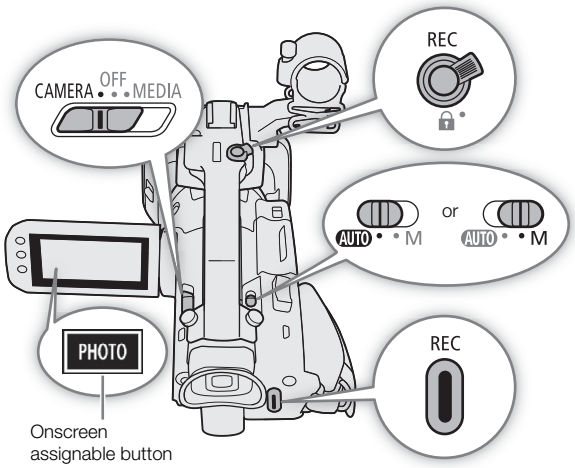

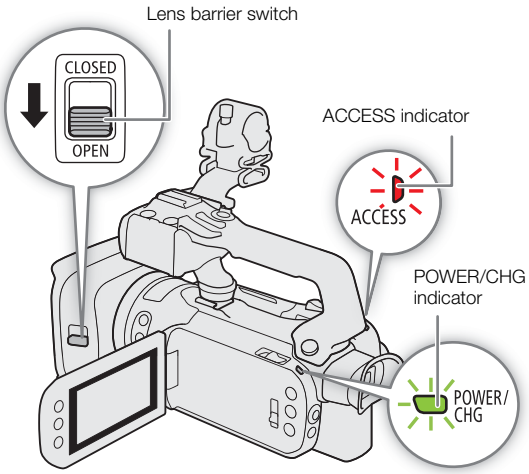

1 Open the lens barrier.
- Set the lens barrier switch to OPEN.

2 Set the mode switch to the desired position.
- Set it to AUTO (AUTO mode) or M (M mode), according to how you want to use the camcorder.

3 Set the power switch to CAMERA.
- The POWER/CHG indicator will illuminate in green.

To record video

4 Press the REC button to begin recording.

- During recording, ● (in red) will appear on the screen. Additionally, if the handle unit is attached to the camcorder, the tally lamp will illuminate.
- You can also press the REC button on the handle unit or the START/STOP button on the supplied wireless controller.

5 Press the REC button again to stop recording.

- ● will change to ■ (in white) and the clip will be recorded on the card selected for recording clips. The tally lamp will also go out.

To take photos

4 During record standby mode, touch [PHOTO].

- By default, the [PHOTO Photo] function is assigned to the onscreen assignable button, but you can change the assigned function if necessary (📖 94).
- A green ◉ icon will appear at the bottom of the screen. Also, at the upper right of the screen, 📷▶ will appear with the icon of the card selected for recording photos.
- You can also press the PHOTO button on the supplied wireless controller.

When you have finished recording

1 Set the lens barrier switch to CLOSED to close the lens barrier.

2 Make sure that the ACCESS indicator is off.

3 Set the power switch to OFF.

4 Close the LCD panel and return the viewfinder to its retracted position.

IMPORTANT

- Be sure to save your recordings regularly (📖 113), especially after making important recordings. Canon shall not be liable for any loss or corruption of data.

NOTES

- The REC button on the handle unit has a lock lever to prevent accidental operation. Set the lock lever to 🔒 in cases such as when you do not want a recording inadvertently paused or do not plan to use this REC button. Return the lever to its previous position to enable use of the REC button again.
- The maximum continuous recording time of a single clip is 6 hours. After that, a new clip will be created automatically and recording will continue as a separate clip.
- When recording in bright places, it may be difficult to use the LCD screen. In such case, use the viewfinder or adjust the brightness of the screen (📖 22).
- A video recording will be saved as separate clips in the following cases:
  - When the camcorder switches to the other SD card while recording video due to the relay recording function (📖 34).
  - When recording clips on an SDHC card, the video (stream) file in the clip will be split approximately every 4 GB. Playback with the camcorder will be continuous.

  After saving the separate split clips to a computer, you can use **MP4 Join Tool** to join the files and save them as a single clip (📖 113).
- Recording photos:
  - Photos are recorded as JPG files. Photos can be recorded only in record standby mode.
  - Photos cannot be recorded when pre-recording is activated.
- When you need to record for a long time with the camcorder set on a tripod, you can close the LCD panel and use only the viewfinder in order to save power when using a battery pack (📖 22).

Reviewing the Latest Clip Recorded

You can review the last 4 seconds of the last clip recorded with the camcorder without switching to MEDIA mode. While reviewing the clip, there will be no sound from the built-in speaker.

After having finished recording a clip, press the button.

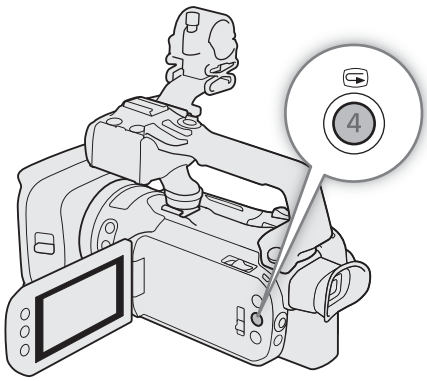

Setting the File Name for XF-AVC Clips

The camcorder allows you to change several settings that determine the file name of XF-AVC clips. Personalize the clip file name according to your preferences or organizational conventions to create files that are easier to identify and organize.

Operating modes: CAMERA MEDIA | AUTO M | MP4 XF-AVC

The basic file name structure is as follows.

1 **Camera index:** One character (A to Z) that identifies the camcorder used.
2 **Reel number:** 3 characters (001 to 999) that identify the card used. The number is assigned automatically but you can set the initial number. After you insert a new card (just purchased or initialized), the number advances by one when the first recording is made.
3 **Clip number:** 4 characters (C001 to D999). The clip number advances automatically with each clip recorded (switching to D001 after C999), but you can set the initial clip number and select the clip numbering method.
4 Recording date (set automatically by the camcorder).
5 Random component: 2 characters (numbers 0 to 9 and capital letters A to Z) that change randomly with each clip.
6 **User defined field:** 5 characters (numbers 0 to 9 and capital letters A to Z) for any other identification purposes.
7 When an SD or SDHC card is used to record clips, a stream number (01 to 99) will be added to the file name. The stream number will advance every time the video (stream) file within the clip is split and recording continues on a separate stream file.

Setting the Components of the Clip File Name

To set the camcorder identifier (camera index)

1 Select [Camera Index].
MENU [4 Recording Setup] [Camera Index]
2 Select [▲] or [▼] to set the desired index and then select [OK].

To set the clip numbering method

1 Select [Clip Numbering].

MENU ➤ [4 Recording Setup] ➤ [Clip Numbering]

2 Select [Reset] or [Continuous] and then select [OK].

Options

[Reset]: The clip number will restart from 001 every time you insert a new card.

[Continuous]: Clip numbers will start from the initial number set with [Clip Number] (following procedure) and continue across multiple cards.

To set the reel number or initial clip number

The initial clip number can only be set when [Clip Numbering] is set to [Continuous].

1 Select [Reel Number] or [Clip Number].

MENU ➤ [4 Recording Setup] ➤ [Reel Number] or [Clip Number]

- The setup screen appears with an orange selection frame on the leftmost digit.
- Select [Reset] to reset the reel/clip number to [001] and return to the previous screen.

2 Select [▲] or [▼] to set the first digit and then select the next field.

- Change the rest of the digits in the same way.

3 After entering all the digits of the clip/reel number, select [OK].

- Select [Cancel] to close the screen without changing the number.

To set the user-defined field

1 Select [User Defined].

MENU ➤ [4 Recording Setup] ➤ [User Defined]

- The setup screen appears with an orange selection frame on the leftmost character.

2 Select [▲] or [▼] to set the first character and then select the next field.

- Change the rest of the characters in the same way.

3 After entering the desired text, select [OK].

- Select [Cancel] to close the screen without changing the user-defined field.

Onscreen Displays

Refer to this section for an explanation of the various screen displays that appear in CAMERA mode. The onscreen displays that actually appear at any time will vary depending on the current menu settings and operating mode.

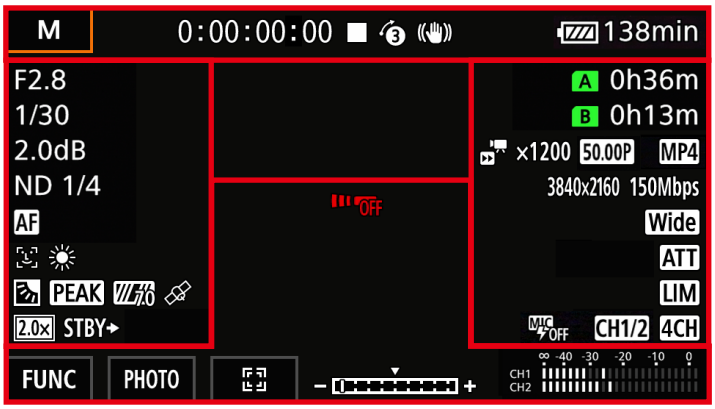

AF frames

Depending on the selected AF frame size (52) and focus function used, you may see some of the following AF frames.

Top of the screen

Icon/Display	Description
AUTO	AUTO mode (26)
P, Tv, Av, M, , , , , , , , ,	Shooting mode (63)
IR	Infrared recording (88)
00:00:00:00	Time code (74)
■, ● (in red)	Recording operation (37) ■ – record standby, ● – recording
	Pre-recording (87)
, , (in yellow)	Image stabilization (60)

Icon/Display	Description
, , , (in white), (in yellow), (in red) 000 min	Remaining battery charge (📖 19) The icon shows an estimate of the remaining charge. The remaining recording time is displayed, in minutes, next to the icon. • in yellow - battery pack is almost depleted. in red - battery pack depleted; replace the battery pack. • Depending on the conditions of use, the actual battery charge may not be indicated accurately.
▶ A / B (card icon in green/ yellow), A / B (in red)	Photo recorded (📖 38) • A (or B) in yellow - the card is almost full. A (or B) in red - the photo cannot be recorded because of a problem with the card.

Left side of the screen

Icon/Display	Description
OFF, ON	Infrared light (📖 88)
F00	Aperture value (📖 65, 66)
1/0000	Shutter speed (📖 65, 66)
AE ±0 0/0	Exposure compensation (📖 68)
±0 0/0	Exposure lock (📖 67)
00.0dB	Gain value (📖 65)
GAIN 00.0dB (value in orange)	AGC limit (📖 62)
ND 1/00	ND filter (📖 70)
MF, AF 000m, ∞	Focus (📖 47) • While adjusting the focus, the estimated focusing distance will be displayed next to the icon.
,	Face detection & tracking (📖 53)
, , K, 1, 2	White balance (📖 71)
2, 3, 4	Look (📖 73)
	Backlight correction (📖 68)
PEAK, PEAK	Peaking (📖 49)
70, 100	Zebra pattern (📖 69)
	GPS signal (📖 90): continuously on – satellite signal acquired; flashing – satellite signal not acquired. • Only when the optional GP-E2 GPS Receiver is connected to the camcorder.
2.0x	Digital tele-converter (📖 58)
REC➔, STBY➔	Recording command (📖 118)

Right side of the screen

Icon/Display	Description
A / B 000h00m, A / B End (card icon in red)	Remaining recording time on the card (📖 139) A (or B) in yellow - the card is almost full; in red - the card is full (no available space).
A / B (in red)	No SD card or cannot record on the SD card.
A / B 000h00m	Relay recording (📖 34)
W T	Zoom bar (📖 55) • Appears only while zooming. The light blue portion indicates the digital zoom range.
x0.00, x0000	Slow & fast motion recording (📖 46)
50.00P, 50.00i, 25.00P	Frame rate (📖 44)
MP4, XF-AVC	Video format (📖 44)

Icon/Display	Description
0000x0000	Resolution (📖 44)
000Mbps	Bit rate
Tele , Wide	Settings optimized for an optional conversion lens (📖 117)
ATT	Microphone attenuator (📖 83)
LIM	Audio limiter (📖 83)
MIC OFF	Plug-in power supply from MIC terminal turned off (📖 84)
CH1/2 , CH1/1 , CH2/2 , CH1+2/1+2 , CH3/4 , CH3/3 , CH4/4 , CH3+4/3+4 , CH1+3/2+4	Monitor channels (📖 110)
4CH	MP4 audio format (📖 77)
MAGN. (in yellow)	Magnification (📖 50)

Bottom and center of the screen

Icon/Display	Description
[FUNC]	Opens the FUNC menu (📖 30, 115)
[AF/MF], [ ], [MAGN.], [ ], [ ], [ ], [WB], [ ], [ ], [REC REVIEW], [PHOTO], [CH/CH], [MENU]	Onscreen assignable button (📖 94) • By default, the [PHOTO Photo] function (take a photo) is assigned to the button.
[ ], [OFF]	Tracking (📖 53)
− +	Exposure bar (📖 65)
∞ −40 −30 −20 −10 0 CH1 CH2	Audio level meter (📖 81)
OFF (in red)	Wireless controller disabled (📖 121)

ⓘ NOTES

- You can press the DISP button to turn off most icons and displays in the following sequence:
  All displays on → Only onscreen markers (when activated, 📖 120) → Minimal displays (recording operation, etc.)

Video Configuration: Video Format, Resolution, Bit Rate and Frame Rate

With the following procedures you can set the video configuration used for recording clips. Select the combination of video format, resolution/bit rate and frame rate settings that best matches your creative needs. The color sampling will be YCbCr 4:2:0, 8 bit.
Available options for some settings may change depending on previous selections for other settings. See the table following the procedures for a summary. For details on recording audio, refer to *Recording Audio* (📖 77).

Operating modes: CAMERA MEDIA | AUTO M | MP4 XF-AVC

Selecting the Video Format

1 Select [Movie Format].
MENU ➤ [1 Recording Setup] ➤ [Movie Format]

2 Select [MP4 MP4] or [XF-AVC XF-AVC] and then select [✕].

Selecting the Resolution and Bit Rate

1 Select [MP4 Resolution] or [XF-AVC Resolution].
MENU ➤ [1 Recording Setup] ➤ [MP4 Resolution] or [XF-AVC Resolution]

2 Select the desired option and then select [✕].
- The selected resolution and bit rate will appear on the right of the screen.

Selecting the Frame Rate

1 Select [MP4 Frame Rate] or [XF-AVC Frame Rate].
MENU ➤ [1 Recording Setup] ➤ [MP4 Frame Rate] or [XF-AVC Frame Rate]

2 Select the desired option and then select [✕].
- The icon of the selected frame rate will appear on the right of the screen.

MP4 clips: Available video configuration settings

Resolution (Bit rate)	Frame rate	
	50.00P	25.00P
3840x2160 (150 Mbps)*	—	●
1920x1080 (35 Mbps)	●	●
1920x1080 (17 Mbps)	●	●

* The frame rate is fixed and cannot be changed.

XF-AVC clips: Available video configuration settings

Resolution (Bit rate)	Frame rate		
	50.00P	50.00i	25.00P
3840x2160 (160 Mbps)*	—	—	●
1920x1080 (45 Mbps)	●	●	●

* The frame rate is fixed and cannot be changed.

NOTES

- The camcorder uses a variable bit rate (VBR) that is adjusted automatically according to the recorded subject. For this reason, actual recording times may vary depending on the subject.
- For details on approximate recording times, refer to the *Reference Tables* (139).

Slow & Fast Motion Recording

You can record clips that have a slow motion or fast motion effect during playback, simply by selecting the desired slow/fast motion rate. Available slow/fast motion rates will vary depending on the resolution and frame rate currently selected. Sound is not recorded when slow & fast motion recording is activated.

Operating modes: CAMERA MEDIA | AUTO M | MP4 XF-AVC

1 Select [Slow & Fast Motion].

MENU ➤ [2 Recording Setup] ➤ [Slow & Fast Motion]

2 Select the desired slow & fast motion rate and then select [✕].

- Select [OFF] to turn off slow & fast motion recording.
- or and the selected rate will appear on the right of the screen.

MP4 clips: Available slow/fast motion rates

Resolution	Frame rate	Available slow/fast motion rates
3840x2160	25.00P	x2, x4, x10, x20, x60, x120, x600, x1200
1920x1080	50.00P	x2, x4, x10, x20, x60, x120, x600, x1200
	25.00P	x0.5

XF-AVC clips: Available slow/fast motion rates

Resolution	Frame rate	Available slow/fast motion rates	Playback bit rate
3840x2160	25.00P	x2, x4, x10, x20, x60, x120, x600, x1200	160 Mbps
1920x1080	50.00P	x2, x4, x10, x20, x60, x120, x600, x1200	45 Mbps
	25.00P	x0.5	

NOTES

- Slow & fast motion recording cannot be used together with the following functions.
  - Dual recording
  - Pre-recording
  - Relay recording
  - Color bars
- While slow & fast motion recording is activated, the recording command signal will not be output from the SDI OUT terminal (XA55 only) or HDMI OUT terminal.
- About the time code when slow & fast motion recording is activated:
  - The time code mode can be set to [REGEN. Regen.], or to [PRESET Preset] with [RECRUN Rec Run] running mode.
  - If the time code running mode was set to [FREE RUN Free Run], the time code running mode will be changed automatically to [RECRUN Rec Run] when slow & fast motion recording is activated.
  - When slow & fast motion recording is turned off, the time code running mode will return to its previous setting.
  - The time code signal cannot be output from the SDI OUT terminal (XA55 only) or HDMI OUT terminal.
- The maximum continuous recording time of a single clip using slow motion recording is the equivalent of 6 hours of playback time. Recording will stop automatically after that. When the [x0.5] rate is selected, the maximum continuous recording time will be 3 hours (which, played back at x0.5 slow motion, equal 6 hours of playback time).
  This restriction does not apply to fast motion recording, which will not stop automatically.

Adjusting the Focus

The camcorder offers the following ways to focus.

Manual focus: Turn the focus/zoom ring to adjust the focus manually. You can use the focus assistance functions (48) to help you focus more accurately when using the manual focus.

AF-Boosted MF: Focus manually most of the way and let the camcorder finish focusing automatically.

Continuous AF: The camcorder keeps focusing automatically at all times.

Manual Focus

Use the focus/zoom ring to focus manually. You can focus manually even after touching the screen to adjust the focus automatically. You can use the MENU ➤ [Camera Setup] ➤ [Focus Ring Direction] and [Focus Ring Response] settings to change the direction and responsiveness of the focus/zoom ring when it is used to adjust the focus.

Operating modes: CAMERA MEDIA | AUTO M* | MP4 XF-AVC

* Manual focus available momentarily only while operating the focus/zoom ring.

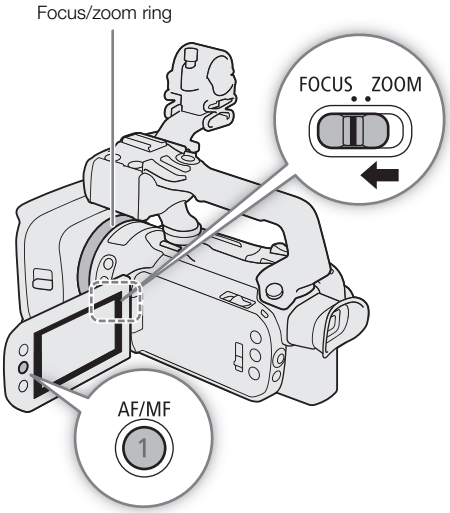

1 Set the focus/zoom ring switch to FOCUS.

To focus using only the focus/zoom ring

2 Press the AF/MF button.
- **MF** will appear on the left of the screen.

3 Turn the focus/zoom ring to adjust the focus.
- The approximate focusing distance will appear on the left of the screen while you operate the focus/zoom ring.

To focus by touching a subject on the screen (Touch focus)

2 Open the focus screen.
[FUNC] ➤ [Focus]

3 Touch the desired point inside the focus frame.
- The mark will flash on the selected subject. The camcorder will focus automatically and then enter manual focus mode.
- The approximate focusing distance will appear at the top left corner of the focus frame.
- To return the camcorder to autofocus mode, select [A].

4 Select [✕] to close the focus adjustment screen.

5 If necessary, turn the focus/zoom ring to further adjust the focus manually.
- The approximate focusing distance will appear on the left of the screen while you operate the focus/zoom ring.

NOTES
- If you operate the zoom after focusing, the focus on the subject may be lost.
- If you focus manually and then leave the camcorder with the power turned on, the focus on the subject may be lost after a while. This possible slight shift in focus is a result of the internal temperature rising. Check the focus before resuming shooting.

Focus Preset

When manual focus is activated, you can register a certain focus point and then, after you focus manually somewhere else, have the camcorder return to the preset focus position.

Operating modes: CAMERA MEDIA | AUTO M | MP4 XF-AVC

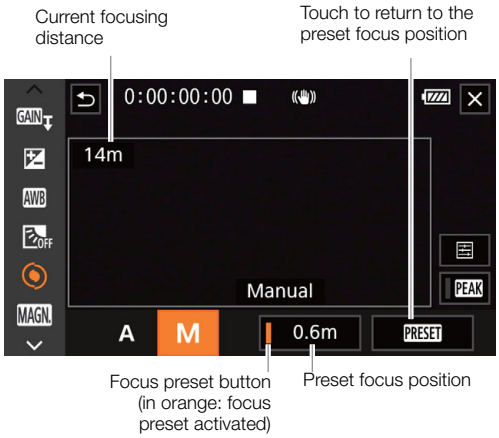

1 Activate the manual focus using the FUNC menu and adjust the focus to the desired position (47).
   - The current approximate focusing distance will appear inside the focus frame and in the focus preset button.
2 Select the focus preset button to save the current focus position.
   - The indicator inside the button will turn orange to show the focus preset function was activated.
   - Select the focus preset button again to cancel the stored preset focus position.
3 Adjust the focus as necessary using touch focus or the focus/zoom ring.
   - Only the distance displayed inside the focus frame will change as you focus.
4 Select [PRESET] to return to the preset focus position.
   - [PRESET] will be grayed out while adjusting the focus or zoom.
   - Select the focus preset button to turn off focus preset.

NOTES

- The preset focus position will be canceled when the camcorder is turned off.
- You can use the MENU ➤ [Camera Setup] ➤ [Focus Preset Speed] setting to set the speed at which the camcorder returns to the preset focus position.
- Focusing distances are approximate. You can change the distance units used with the MENU ➤ [Display Setup] ➤ [Distance Units] setting.

Using the Focus Assistance Functions

In order to focus more accurately, you can use the following focus assistance functions: Dual Pixel Focus Guide, an onscreen guide that shows you if the subject is in focus; peaking, which creates a clearer contrast by emphasizing the outlines of the subject; and magnification, which enlarges the image on the screen. You can use peaking and the focus guide or peaking and magnification simultaneously for greater effect.

Operating modes: CAMERA MEDIA | AUTO M | MP4 XF-AVC

Focus guide

By default, MENU ➤ [Camera Setup] ➤ [Focus Guide] is set to [ON On], so the focus guide will appear when the camcorder is set to manual focus mode. The focus guide gives you an intuitive visual indication of the current focus distance and the direction and amount of adjustment necessary to bring the picture into full focus. When used in combination with face detection and tracking (53), the focus guide frame will be displayed near the eyes of the person detected as the main subject.

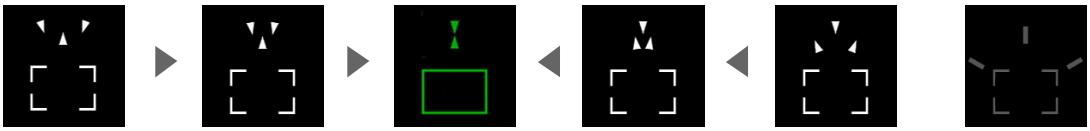

Focus farther (large adjustment) | Focus farther (small adjustment) | In focus (in green) | Focus closer (small adjustment) | Focus closer (large adjustment) | Cannot determine adjustment

If necessary, touch the desired point on the screen to move the focus guide and focus on a different subject.

NOTES

- When the focus guide frame turns green, the subject is correctly focused.
- With subjects or in situations where autofocus may not work well (53), the focus guide may not be displayed correctly.
- The focus guide cannot be used in the following cases:
  - While the focus is being adjusted automatically using AF-boosted MF or continuous AF.
  - When MENU ➤ [Camera Setup] ➤ [Conversion Lens] is set to an option other than [OFF Off].
  - When the digital zoom is activated and the zoom ratio is in the digital zoom range.
  - When the shooting mode is set to [Fireworks].
  - While the color bars are displayed.
  - When infrared recording is activated.
- When the focus guide is used together with face detection & tracking, the focus guide may not appear near the main subject's eyes, depending on the direction in which the face is turned.
- If you set an assignable button to [Focus Guide] (94), you can press the button to turn the focus guide on/off.

Peaking

When peaking is activated, the edges of objects in focus will be highlighted in red, blue or yellow on the screen. In addition, you can choose to switch the screen to black & white while peaking is activated, further emphasizing the edges.

1 Open the peaking settings screen.
  [FUNC] ➤ [Focus] ➤ [ ]
2 Select the desired options and then select [ ].
  - For the black & white setting: Select [Off] or [On]. For the peaking color: Select [Red], [Blue] or [Yellow].
3 Select [PEAK] and then select [✕].
  - PEAK or PEAK appears on the left of the screen, peaking is activated and edges in focus are shown highlighted.
  - Touch [PEAK] again before closing the screen to turn off the peaking effect.

Magnification

1 Press the MAGN. button.
- Alternatively, you can select [FUNC] ➤ [MAGN. Magnification] ➤ [OK].
- MAGN. appears at the lower right of the screen and the center of the screen* is magnified 2 times.
- The magnification frame displayed at the bottom right corner of the screen shows the approximate part of the image shown magnified.

2 If necessary, move around the magnification frame to check other parts of the image.
- Drag your finger on the screen or push the joystick (▲▼ ◀▶).

3 Press the MAGN. button again or select [✕] to cancel the magnification.

* If one of the AF frames or a face detection frame is displayed on the screen, the area around the active frame will be magnified instead.

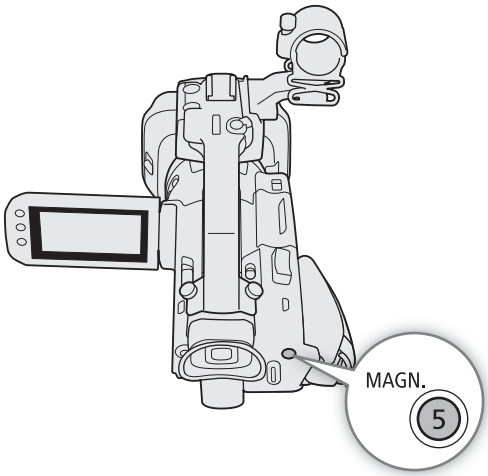

ⓘ NOTES
- Peaking/magnification are only displayed on the camcorder's screen. They will not appear on video output from the output terminals and will not affect your recordings.
- Magnification is not available while the color bars are displayed.
- If you set an assignable button to [MAGN. Magnification] (📖 94), you can press the button to turn the magnification on/off.
- Magnification will be turned off when you start recording but you can turn it on/off again while recording.

AF-Boosted MF

With this focus mode, you can focus manually most of the way and let the camcorder finish focusing automatically. This is very convenient when you want to make certain that your 4K recordings are in sharp focus. Additionally, with this mode, if the camcorder cannot evaluate how to adjust the focus, it will not perform unreliable focus adjustments. This results in an overall more stable focusing operation than with continuous AF.

Operating modes: CAMERA MEDIA | AUTO M | MP4 XF-AVC

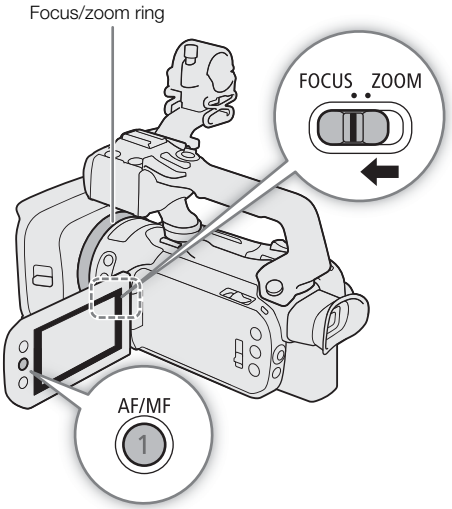

1 Set the focus/zoom ring switch to FOCUS.

2 Press the AF/MF button to activate the autofocus.
- AF will appear on the left of the screen.

3 Set the AF frame size to [L Large] or [S Small] (52).

4 Select [AF Mode].
MENU ➤ [2 Camera Setup] ➤ [AF Mode]

5 Select [BOOST AF-Boosted MF] and then select [✕].
- When the focus is in the manual adjustment range, the focus frame will appear in yellow.
- If necessary, change the size and position of the AF frame (52).

6 Turn the focus/zoom ring to adjust the focus.
- Focus manually to bring the subject closer into focus. When the focus enters the automatic adjustment range, the focus frame will turn white and the camcorder will then finish focusing automatically.
- While the focus stays within the automatic adjustment range, the camcorder will keep the subject in focus automatically.

Continuous AF

By default, the camcorder will focus automatically on a subject at the center of the screen. If the AF frame size has been changed to an option other than [A Automatic] (52), the camcorder will focus automatically on a subject inside the AF frame that appears on the screen.

Operating modes: CAMERA MEDIA | AUTO* M | MP4 XF-AVC

* In AUTO mode, continuous AF is applied by default so this procedure is not necessary.

1 Press the AF/MF button to activate the autofocus.
- AF will appear on the left of the screen.

2 Set the AF frame size to [L Large] or [S Small] (52).

3 Select [AF Mode].
MENU ➤ [2 Camera Setup] ➤ [AF Mode]

4 Select [CONT Continuous] and then select [✕].

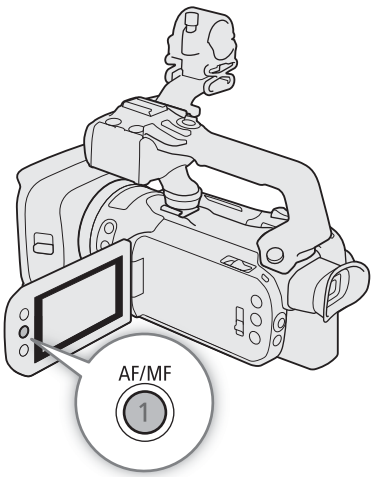

NOTES
- When [Camera Setup] ➤ [AF Frame Size] is set to [L Large] or [S Small], a white AF frame will appear on the screen.

Changing the AF Frame Size

By default, when autofocus is used, the camcorder focuses on a subject at the center of the screen and no AF frame is displayed. You can select to display an AF frame and change its size and position to focus on a specific area or subject.

Operating modes: CAMERA MEDIA | AUTO M | MP4 XF-AVC

1 Select [AF Frame Size].
MENU ➤ [2 Camera Setup] ➤ [AF Frame Size]

2 Select the desired option and then select [✕].

Options

[A Automatic]: No AF frame is displayed. The camcorder focuses automatically on a subject at the center of the screen.

[L Large], [S Small]:
An AF frame is displayed. You can move the AF frame within 80% of the screen area and select its size according to the subject you want to focus.

NOTES
- When the AF frame size is set to [A Automatic], AF-Boosted MF cannot be used.
- In AUTO mode, the AF mode and AF frame size are automatically set to [CONT Continuous] and [A Automatic], respectively, and these settings cannot be changed.

About the autofocus (AF) functions:

- You can change some aspects of the autofocus function with the following settings.
  - MENU ➤ [Camera Setup] ➤ [AF Speed] to set the AF speed (the speed at which the focus is adjusted) to one of 3 levels.
  - MENU ➤ [Camera Setup] ➤ [AF Response] to set the responsiveness of the autofocus function to one of 3 levels.
- When recording in bright surroundings, the camcorder closes down the aperture. This may cause the picture to appear blurred and is more noticeable toward the wide angle end of the zoom range. In such case, select the Av or M shooting mode, apply the ND filter (📖 70) and adjust the aperture.
- Autofocus is not available in the following cases:
  - When MENU ➤ [Camera Setup] ➤ [Conversion Lens] is set to an option other than [OFF Off].
  - When infrared recording is activated.
- Autofocus takes slightly longer to focus when the frame rate is set to 25.00P than when it is 50.00P.
- When recording under dark conditions, the focusing range narrows and the picture may appear blurred.
- While using autofocus, you can turn the focus/zoom ring to focus manually. When you stop turning the ring, the camcorder returns to autofocus. This is useful in situations such as when focusing on a subject on the other side of a window.
- When the shooting mode is set to [Fireworks], the focus will be set to ∞ and cannot be changed.
- Autofocus may not work well on the following subjects or in the following cases. In such case, focus manually.
  - Reflective surfaces
  - Subjects with low contrast or without vertical lines
  - Fast moving subjects
  - When [FUNC] ➤ [Looks] is set to [3 Wide DR].
  - When subjects at different distances appear in the picture.
  - Through dirty or wet windows
  - Night scenes
  - Subjects with a repetitive pattern

Face Detection & Tracking

When face detection & tracking is activated, the camcorder will detect the subject's face and automatically adjust the focus[1] and exposure[2]. When there are a number of people in the picture, one person will be determined to be the main subject but you have the option to select a different person as the main subject (you must use the touch screen to select the subject). The camcorder will keep tracking the main subject even when it moves.

[1] Only in AF mode. In MF mode you can use the focus guide (📖 49) to help you focus the subject manually.

[2] The exposure is not adjusted when the shooting mode is set to [Snow], [Beach], [Sunset] or [Spotlight].

Operating modes: CAMERA MEDIA | AUTO* M | MP4 XF-AVC

* In AUTO mode, face detection & tracking is always activated and cannot be turned off. Start the procedure from step 2.

1 Activate face detection & tracking.

MENU ➤ [3 Camera Setup] ➤ [Face Detection & Tracking] ➤ [ON On] ➤ [✕]

- will appear on the left of the screen.

2 Point the camcorder at the subject.

- All detected faces will have a face detection frame. The main subject will be indicated with a face detection frame with small arrows (white in AF mode, gray in MF mode).

3 If necessary, touch the desired subject on the screen to select a different main subject.
- **To select a different person:** Touch a face with a gray frame. The face detection frame will change to a double frame (tracking frame, white in AF mode, gray in MF mode). The camcorder will track the subject as it moves.
- **To select other moving subjects:** In AF mode only, you can track other moving subjects such as a pet. If the AF frame size is set to [A Automatic], touch the desired subject on the screen; if it set to another option, select [ ] to display the focus frame and then touch a subject inside the frame. A white double frame (tracking frame) will appear and the camcorder will track the subject as it moves.
- Touch [OFF] to remove the frame and cancel the tracking.

4 In MF mode, the focus guide will appear on the selected main subject if this function is activated. Use the focus guide as a reference to focus manually (49).
- In AF mode, the camcorder will keep focusing on the main subject and track it as it moves.

Limiting Autofocus to Faces (Face-Only AF)

While using autofocus, you can limit the autofocus function only to cases when a face is detected and use manual focus otherwise. When a face is detected, the camcorder will automatically keep the subject in focus and optimize the exposure.

Operating modes: CAMERA MEDIA | AUTO M | MP4 XF-AVC

Set an assignable button to [Face Only AF] (94) and press the button.
- While face-only AF is activated, the icon will change to .

NOTES
- The camcorder may mistakenly detect the faces of non-human subjects. In such case, turn face detection & tracking off.
- When face detection & tracking is activated, the slowest shutter speed used by the camcorder is 1/25.
- Touching somewhere with a color or pattern unique to the subject will make it easier to track. However, if there is another subject in the vicinity that shares similar characteristics to the selected subject, the camcorder may start tracking the incorrect subject. Touch the screen again to select the desired subject.
- In certain cases, faces may not be detected correctly. Typical examples include:
  - Faces extremely small, large, dark or bright in relation to the overall picture.
  - Faces turned to the side, upside down, at a diagonal or partially hidden.
- Face detection & tracking cannot be used in the following cases.
  - When the shooting mode is set to [Night Scene], [Low Light] or [Fireworks].
  - When the shutter speed used is slower than 1/25.
  - When the digital zoom is activated and the zoom ratio exceeds 60x.
  - When infrared recording is activated.
- In certain cases, tracking may not start even after touching a subject on the screen. Typical examples include:
  - Subjects extremely small or large in relation to the overall picture.
  - Subjects too similar to the background.
  - Subjects lacking sufficient contrast.
  - Fast moving subjects.
  - When shooting indoors with insufficient lighting.
- Face-only AF will be deactivated in the following cases:
  - When the power switch, mode switch or INFRARED switch is operated.
  - In the same cases that face detection & tracking cannot be used (see above).
  - When the camcorder is switched between autofocus and manual focus.
  - When the assignable button is no longer assigned to [Face Only AF].

Zooming

To zoom in and out, you can use the focus/zoom ring, the zoom rockers on the camcorder and handle unit, the supplied wireless controller or an optional RC-V100 Remote Controller, or the onscreen zoom controls.
In addition to the 15x optical zoom, you can use the MENU ➤ [Camera Setup] ➤ [Digital Zoom] setting* to activate the digital zoom (300x) or the digital tele-converter, which allows you to enlarge the image on the screen digitally.

* This setting is not available in AUTO mode or when MENU ➤ [Camera Setup] ➤ [Conversion Lens] is set to [Wide WA-U58].

Operating modes: CAMERA MEDIA | AUTO M | MP4 XF-AVC

Using the Focus/Zoom Ring

1 Set the focus/zoom ring switch to ZOOM.

2 Turn the focus/zoom ring to adjust the zoom.

- Turn the focus/zoom ring slowly for a slow zoom; turn it faster for faster zooms.
- The zoom bar that appears on the screen indicates the approximate zoom position.

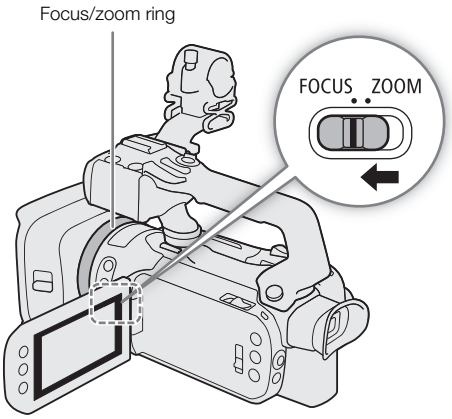

NOTES

- You can customize the operation of the focus/zoom ring with the MENU ➤ [Camera Setup] ➤ [Focus/Zoom Ring Operation] and [Zoom Ring Direction] settings.
- If you turn the focus/zoom ring too quickly, the camcorder may not be able to zoom immediately. In such case, the camcorder will zoom after you finish turning the ring.

Using the Grip Zoom Rocker

Move the grip zoom rocker toward **W** (wide angle) to zoom out. Move it toward **T** (telephoto) to zoom in.

- You can set the zoom speed with the following procedure.

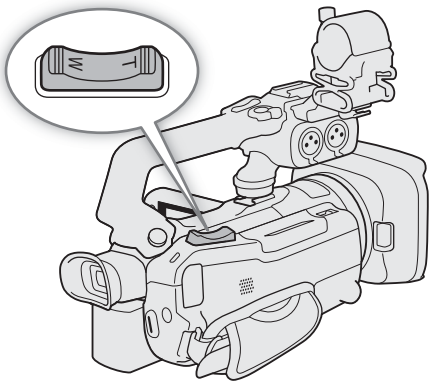

W Zoom out **T** Zoom in

Setting the Zoom Speed of the Grip Zoom Rocker

You can select a variable speed (the harder you press, the faster the zoom) or a constant speed that you can set.

Grip zoom rocker: Approximate zoom speeds (time required to zoom end-to-end)

[Grip Zoom Speed] setting	Selected constant speed	[Zoom Speed Level] setting		
		[Slow]	[Normal]	[Fast]
[VAR] (variable)	–	4.2 sec. to 4 min. 38 sec.	2.6 sec. to 2 min.	1.5 sec.* to 1 min.
[CONST] (constant)	1 (slowest)	4 min. 38 sec.	2 min.	1 min.
	16 (fastest)	4.2 sec.	2.6 sec.	1.5 sec.*

* When the zoom speed is too fast, the camcorder may have more trouble focusing automatically while zooming.

1 Select the overall zoom speed level.
MENU ➤ [1 Camera Setup] ➤ [Zoom Speed Level] ➤ Desired zoom speed level ➤ [↩]

2 Select whether to use a variable or constant zoom speed.
MENU ➤ [1 Camera Setup] ➤ [Grip Zoom Speed] ➤ [VAR] (variable) or [CONST] (constant)
- If you selected [VAR], skip to step 4.

3 Select [◀] or [▶], or drag your finger along the adjustment bar, to set the desired constant speed.

4 Select [✕].

NOTES
- When [Zoom Speed Level] is set to [Fast], the camcorder may pick up and record lens operation sounds.
- You can use the MENU ➤ [Camera Setup] ➤ [Grip Zoom Operation] setting to disable the grip zoom rocker's operation.

To use high-speed zoom in standby mode

When high-speed zoom is activated and MENU ➤ [Camera Setup] ➤ [Grip Zoom Speed] is set to [VAR] (variable zoom speed), in record standby mode you will be able to zoom at the highest speed available ([Fast]). Nevertheless, the zoom speed while recording will be determined by the [Zoom Speed Level] setting.

1 Select [High-Speed Zoom].
MENU ➤ [2 Camera Setup] ➤ [High-Speed Zoom]

2 Select [ON On] and then select [✕].

NOTES
- When pre-recording is activated, the zoom speed will be determined by the [Zoom Speed Level] setting even in record standby mode.
- When [Zoom Speed Level] is already set to [Fast], the zoom speed will not change.

Using the Handle Zoom Rocker

To use the handle zoom rocker, attach the handle unit to the camcorder in advance (📖 20).

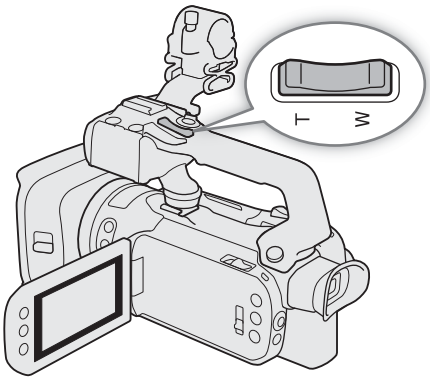

Move the handle zoom rocker toward W (wide angle) to zoom out. Move it toward T (telephoto) to zoom in.

- You can set the constant zoom speed with the following procedure.

Setting the Zoom Speed of the Handle Zoom Rocker

Handle zoom rocker: Approximate zoom speeds (time required to zoom end-to-end)

[Handle Zoom Speed] setting	[Zoom Speed Level] setting		
	[Slow]	[Normal]	[Fast]
1 (slowest)	4 min. 38 sec.	2 min.	1 min.
16 (fastest)	4.2 sec.	2.6 sec.	1.5 sec.*

* When the zoom speed is too fast, the camcorder may have more trouble focusing automatically while zooming.

1 Select the overall zoom speed level (step 1, 📖 56).
2 Select [Handle Zoom Speed].
MENU ➤ [1 Camera Setup] ➤ [Handle Zoom Speed]
3 Select [◀] or [▶], or drag your finger along the adjustment bar, to set the desired constant speed.
4 Select [✕].

ⓘ NOTES

- You can use the MENU ➤ [Camera Setup] ➤ [Handle Zoom Operation] setting to disable the handle zoom rocker's operation.

Using the Supplied Wireless Controller or an Optional Remote Controller

The zoom speeds when using the supplied wireless controller, the optional RC-V100 Remote Controller or a commercially available remote control connected to the REMOTE terminal are different.

Zoom speeds for remote operation

Accessory	Zoom speed
Wireless controller (supplied)	Constant zoom speed. See the following table.
RC-V100 Remote Controller (optional)	Variable speed: At default settings, turn the RC-V100's ZOOM dial right to zoom in (T) and left to zoom out (W). The greater the angle at which the dial is rotated from the center, the faster the zoom.
Commercially available remote controls	Refer to the remote control's instruction manual. If the remote control does not support variable zoom: Constant zoom speed. If the remote control supports variable zoom: Variable zoom speed according to the remote control's settings.

Setting the Zoom Speed of the Supplied Wireless Controller

Supplied wireless controller: Approximate zoom speeds (time required to zoom end-to-end)

[Wireless Ctrlr Zoom Speed] setting	[Zoom Speed Level] setting		
	[Slow]	[Normal]	[Fast]
1 (slowest)	4 min. 38 sec.	2 min.	1 min.
16 (fastest)	4.2 sec.	2.6 sec.	1.5 sec.*

* When the zoom speed is too fast, the camcorder may have more trouble focusing automatically while zooming.

1 Select the overall zoom speed level (step 1, 56).

2 Select [Wireless Ctrlr Zoom Speed].

MENU [2 Camera Setup] [Wireless Ctrlr Zoom Speed]

3 Select [◀] or [▶], or drag your finger along the adjustment bar, to set the desired constant speed.

4 Select [✕].

Using the Touch Screen's Zoom Controls

1 Open the onscreen zoom controls.

[FUNC] [ZOOM Zoom]

- The zoom controls appear at the bottom the screen.

2 Touch the zoom controls to operate the zoom.

- Touch anywhere within the W area to zoom out or anywhere within the T area to zoom in. Touch closer to the center for a slow zoom; touch closer to the W/T icons for faster zooms.

3 Select [✕].

Digital Tele-Converter

Using the digital tele-converter, you can digitally increase the focal length of the camcorder by a factor of approx. 2 and record the enlarged image.

Operating modes: CAMERA MEDIA | AUTO M | MP4 XF-AVC

1 Select [Digital Zoom].

MENU [1 Camera Setup] [Digital Zoom]

2 Select [2.0x Digital Tele-conv.] and then select [✕].

3 Open the onscreen zoom controls.

[FUNC] [ZOOM Zoom]

4 Select [2.0x] (digital tele-converter) and then select [✕].

- The center of the screen will be enlarged approximately 2 times and the 2.0x icon will appear on the left of the screen.
- Select [2.0x] again before closing the screen to turn off the digital tele-converter.

NOTES

- You can attach the optional TL-U58 Tele-converter and use it in conjunction with this function to increase the effect.
- The digital tele-converter cannot be activated while recording or when MENU ➤ [Camera Setup] ➤ [Conversion Lens] is set to [Wide WA-U58].
- The image is digitally processed so the image will deteriorate throughout the zoom range.
- The digital tele-converter will be deactivated if the resolution is switched between 3840x2160 and 1920x1080.

Image Stabilization

Use the image stabilizer to compensate for camcorder shake in order to achieve steadier shots. The camcorder offers the following IS modes.

Standard IS ( ): Standard IS compensates for a lower degree of camcorder shake, for example, for handheld shots while you remain stationary, and is suitable for shooting natural-looking scenes.

Dynamic IS ( ): Dynamic IS compensates for a higher degree of camcorder shake, such as when shooting while walking, and is more effective as the zoom approaches full wide angle.

Powered IS ( ): Powered IS is most effective when you are stationary and zooming in on far subjects using high zoom ratios (the more you approach the telephoto end). This mode is not suitable for tilting and panning shots.

Operating modes: CAMERA MEDIA | AUTO M | MP4 XF-AVC

Dynamic IS or Standard IS

1 Select [Image Stabilizer].

MENU ➔ [4 Camera Setup] ➔ [Image Stabilizer]

2 Select [Standard] (Standard IS) or [Dynamic] (Dynamic IS) and then select [✕].

- Select [Off] instead to turn off the image stabilization, for example, when the camcorder is mounted on a tripod.
- The icon of the selected mode appears at the top of the screen.

Powered IS

Press and hold the POWERED IS button as long as you want to activate Powered IS.

- appears in yellow at the top of the screen while Powered IS is activated.

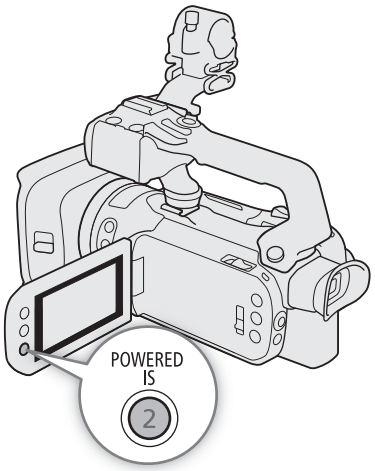

NOTES

- If the degree of camcorder shake is too high, the image stabilizer may not be able to compensate fully.
- Powered IS is available even when [Image Stabilizer] is set to [Off].
- You can change the operation of the POWERED IS button (long press or toggle on/off) with the MENU [Camera Setup] [Powered IS Button] setting.
- The angle of view will change when [Image Stabilizer] is set to an option other than [Dynamic].
- When using Dynamic IS, the edges of the picture may be adversely affected (ghosting, artifacts and/or dark areas may appear) when compensating for a high degree of camcorder shake.

Automatic Gain Control (AGC) Limit

When recording in dark surroundings, the camcorder will automatically increase the gain to try to get a brighter picture. By setting a maximum gain value, you can limit the amount of noise in the picture and keep a darker look. This function can only be used when the shooting mode is set to **P**, **Tv** or **Av**.

Operating modes: CAMERA MEDIA | AUTO M | MP4 XF-AVC

1 Open the AGC limit adjustment screen.

[FUNC] ➤ [GAIN AGC Limit] ➤ [**M**]

- An adjustment dial will appear on the screen.
- Select [**M**] again to return the camcorder to automatic gain control.

2 Drag your finger along the dial to set the desired maximum gain value.

- You can select an AGC limit from 0.0 dB to 38.0 dB.
- If [FUNC] ➤ [Looks] is set to [3 Wide DR], the lowest AGC limit that can be set will be 9.0 dB.

3 Select [✕].

- When an AGC limit is set, GAIN and the maximum gain value will appear on the left of the screen.

NOTES

- The AGC limit cannot be set in the following cases:
  - When the exposure is locked (📖 67).
  - When infrared recording is activated.
- If you set the CUSTOM dial's function to [GAIN AGC Limit] (📖 93), you can turn the AGC limit on/off with the CUSTOM button and adjust the AGC limit using the CUSTOM dial.

Shooting Modes

In [M] mode, the camcorder offers a number of shooting modes that give you varying degrees of control over the camcorder's settings. Select the shooting mode most appropriate to your needs or creative vision and adjust manually those settings you wish to control, letting the camcorder take care of the rest.
Shooting modes cannot be used when infrared recording is activated.

Operating modes: CAMERA MEDIA | AUTO M | MP4 XF-AVC

1 Select the shooting mode button.

2 Select the desired shooting mode and then select [✕].

- The shooting mode button will show the selected mode's icon.

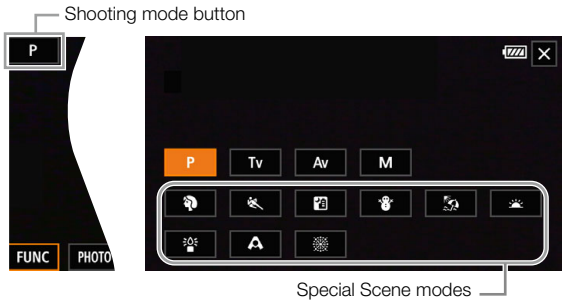

Available shooting modes

Shooting mode	Description	📖
[P Programmed AE]	The camcorder automatically sets the shutter speed, aperture and gain.	66
[Tv Shutter-Pri. AE]	Set the shutter speed manually while the camcorder automatically adjusts the aperture and gain.	66
[Av Aperture-Pri. AE]	Set the aperture and ND filter manually while the camcorder automatically adjusts the shutter speed and gain.	66
[M Manual Exposure]	Set the shutter speed, aperture and gain manually for full control over the exposure.	65
Special Scene modes	These shooting modes offer preset combinations of settings optimized for specific situations.	63

Special Scene Modes

Using a Special Scene mode can be an easy and convenient alternative to adjusting detailed exposure settings.

[Portrait]
The camcorder uses a large aperture, to achieve a sharp focus on the subject while blurring the background.

[Night Scene]
To record nightscapes with lower noise.

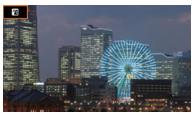

[Beach]
To record on a sunny beach without the subject being underexposed.

[Low Light]
To record in low-light situations.

[Sports]
To record sports scenes, such as sporting events or dance scenes.

[Snow]
To record in bright ski resorts without the subject being underexposed.

[Sunset]
To record sunsets in vibrant colors.

[Spotlight]
To record spotlit scenes.

[Fireworks]
To record fireworks.

NOTES

- [Portrait]/[Sports]/[Snow]/[Beach]: The picture may not appear smooth during playback.
- [Snow]/[Beach]: The subject may become overexposed on cloudy days or in shaded places. Check the image on the screen.
- [Low Light]:
  - Moving subjects may leave a trailing afterimage.
  - Picture quality may not be as good as in other modes.
  - White points may appear on the screen.
  - Autofocus may not work as well as in other modes. In such case, adjust the focus manually.
- [Low Light]/[Fireworks]: To avoid camcorder blur (blur due to the camcorder moving) we recommend using a tripod.

Adjusting the Exposure

The first part of this section covers the main shooting modes used to adjust the exposure. Select a shooting mode according to which elements of the exposure (aperture, shutter speed and gain) you want to control and let the camcorder adjust the rest of the settings automatically.
This section also covers exposure adjustment functions that can help you achieve the brightness you want when the overall exposure obtained automatically by the camcorder is not the best for your shot.

Operating modes: CAMERA MEDIA | AUTO M | MP4 XF-AVC

Manual Exposure (M)

This shooting mode gives you the most control over shooting settings as you can set the aperture, shutter speed and gain to get the exposure that you want.

1 Set the shooting mode to [M Manual Exposure] (63).
- The aperture value, shutter speed and gain value will appear on the left of the screen.

2 Open the aperture, shutter speed or gain adjustment screen.
[FUNC] ➤ [IRIS Aperture], [SHTR Shutter Speed] or [GAIN Gain]
- An adjustment dial will appear on the screen.

3 Drag your finger along the dial to set the desired value.
- You can select [ ] to display the zebra pattern (69, step 2) and check for overexposed areas.

4 Repeat steps 2 and 3 as necessary to adjust the exposure to the desired level.

5 Select [✕].

Available settings

Aperture[1]	F2.8, F3.2, F3.4, F3.7, F4.0, F4.4, F4.5, F4.8, F5.2, F5.6, F6.2, F6.7, F7.3, F8.0, F8.7, F9.5, F10, F11
Shutter speed[2]	1/6, 1/7, 1/8, 1/10, 1/12, 1/14, 1/17, 1/20, 1/25, 1/29, 1/30, 1/33, 1/40, 1/50, 1/60, 1/75, 1/90, 1/100, 1/120, 1/150, 1/180, 1/210, 1/250, 1/300, 1/350, 1/400, 1/500, 1/600, 1/700, 1/800, 1/1000, 1/1200, 1/1400, 1/1600, 1/2000
Gain	0.0 dB[3] to 39.0 dB (1-dB increments)

[1] Available values depend on the zoom position (F2.8 to F11 at full wide angle; F4.5 to F11 at full telephoto). Aperture values displayed on the screen are for reference only.
[2] During slow & fast motion recording, available values will vary depending on the selected slow/fast motion rate.
[3] From 9.0 dB when [FUNC] ➤ [Looks] is set to [3 Wide DR].

The exposure bar

When the shooting mode is set to M, the exposure bar will appear on the screen, showing the optimal automatic exposure and current exposure. When the difference between current and optimal exposure is larger than ±2 EV, the indicator will flash at the edge of the exposure bar.

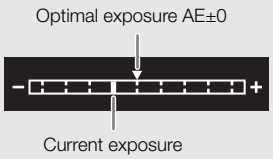

NOTES

- If you set the CUSTOM dial's function to [Tv/Av/M Tv/Av/M] (93), you can adjust the aperture, shutter speed and gain with the CUSTOM dial and button.

Automatic Exposure: Programmed AE (P)

The camcorder automatically sets the shutter speed, aperture and gain (for clips) but you will have the option to use other functions that are not available in AUTO mode.

Set the shooting mode to [P Programmed AE] (□ 63).

Automatic Exposure: Shutter Priority (Tv)

With this shooting mode you set the shutter speed manually, for example, to capture fast-moving subjects in sharp focus or to obtain a brighter image in low-light situations. The camcorder will automatically adjust other settings to obtain the best exposure.

1 Set the shooting mode to [Tv Shutter-Pri. AE] (□ 63).
- The shutter speed will appear on the left of the screen.

2 Open the shutter speed screen.
[FUNC] ➔ [SHTR Shutter Speed]
- An adjustment dial will appear on the screen.

3 Drag your finger along the dial to set the desired value.
- For available shutter speeds, see the manual exposure table (□ 65)
- You can select [ZEBRA OFF] to display the zebra pattern (□ 69, step 2) and check for overexposed areas.

4 Select [✕].

Automatic Exposure: Aperture Priority (Av)

With this shooting mode you set the aperture value manually to control the depth of field, for example, in order to defocus the background and make the subject stand out more. The camcorder will automatically adjust other settings to obtain the best exposure.

1 Set the shooting mode to [Av Aperture-Pri. AE] (□ 63).
- The aperture value will appear on the left of the screen.

2 Open the aperture screen.
[FUNC] ➔ [IRIS Aperture]
- An adjustment dial will appear on the screen.

3 Drag your finger along the dial to set the desired value.
- For available aperture values, see the manual exposure table (□ 65)
- You can select [ZEBRA OFF] to display the zebra pattern (□ 69, step 2) and check for overexposed areas.

4 Select [✕].

ⓘ NOTES

- If you set the CUSTOM dial's function to [Tv/Av/M Tv/Av/M] (□ 93), you can adjust the aperture value or shutter speed with the CUSTOM dial and button.
- When the shooting mode is set to Tv or Av, depending on the brightness of the subject, the camcorder may not be able to set the appropriate exposure. In such case the shutter speed (Tv) or aperture value (Av) will flash on the screen. Change the shutter speed/aperture as necessary.

Touch Exposure

You can touch the screen to optimize the exposure for a specific subject or area. The camcorder will automatically adjust the exposure for the selected point and lock the exposure settings. You can even touch a bright area of the image to make that point the 100% brightness level and so try to avoid overexposure (Highlight AE). This function cannot be used when the shooting mode is set to **M** or [Fireworks].

1 Open the touch exposure settings screen.

[FUNC] ➤ [Exposure Comp.] ➤ [ ]

2 Select [N Normal] or [H Highlights] and then select [ ]

- An adjustment dial will appear on the screen.
- You can select [ ] to display the zebra pattern (69, step 2) and check for overexposed areas.

3 Touch the desired point inside the exposure frame to optimize and lock the exposure.

- The mark will flash and the exposure will be adjusted automatically so the area you touched is correctly exposed.
- The exposure compensation value ±0 and will appear on the screen. In addition, the indicator inside the [] button will turn orange to indicate that the exposure is locked.
- Select [] again to release the exposure lock.

4 Drag your finger along the dial to further compensate the exposure.

- You can set a compensation value from –3 to +3 in 1/4 EV increments.

5 Select [✕].

- The exposure compensation value and will appear on the left of the screen. If the exposure was not locked (compensation only), [AE] and the compensation value will appear instead.

Exposure Lock (AE Lock)

You can lock the current exposure settings and use them even when you reframe the picture. This function cannot be used when the shooting mode is set to **M** or [Fireworks].

1 Lock the current exposure.

[FUNC] ➤ [Exposure Comp.] ➤ [ ]

- The exposure compensation value ±0 and will appear on the screen. In addition, the indicator inside the [] button will turn orange to indicate that the exposure is locked.
- Select [] again to release the exposure lock.

2 If necessary, drag your finger along the dial to further compensate the exposure.

- You can set a compensation value from –3 to +3 in 1/4 EV increments.
- Depending on the brightness of the image and the exposure locked, some values may not be available and the available exposure compensation range may differ.

3 Select [✕].

- The exposure compensation value and will appear on the left of the screen.

Exposure Compensation

You can compensate the exposure that was set using automatic exposure, in order to darken or lighten the image. This function can only be used when the shooting mode is set to P, Tv or Av.

1 Open the exposure screen.

[FUNC] ➤ [± Exposure Comp.]

- If the exposure was locked, select [✳] to release the exposure lock.

2 Drag your finger along the dial to compensate the exposure.

- You can set a compensation value from –2 to +2 in 1/4 EV increments.

3 Select [✕].

- [AE] and the exposure compensation value will appear on the left of the screen.

ⓘ NOTES

- Exposure compensation is not available when infrared recording is activated.
- If you set the CUSTOM dial's function to [± Exposure Comp.] (📖 93), you can compensate the exposure with the CUSTOM dial and button.
- The exposure lock will be released in the following cases:
  - When the power switch, mode switch or INFRARED switch is operated.
  - When the shooting mode is changed.
  - When the resolution, frame rate or look is changed.

Backlight Correction

When you need to record a scene with constant backlight conditions, you can use backlight correction to make the picture, especially the darker areas, brighter.

1 Select [BLC Always On].

[FUNC] ➤ [BLC Always On]

2 Select [On] and then select [✕].

- will appear on the left of the screen and the exposure will be adjusted to account for backlight conditions.

ⓘ NOTES

- You can also use the MENU ➤ [Camera Setup] ➤ [Auto Backlight Correction] setting to activate the automatic backlight correction function. However, the automatic correction cannot be used when [FUNC] ➤ [Looks] is set to [2 Neutral] or [3 Wide DR].
- Backlight correction cannot be turned on/off when [FUNC] ➤ [Looks] is set to [3 Wide DR] and the exposure is locked.
- If you set an assignable button to [BLC Always On] (📖 94), you can press the button to turn the backlight correction on/off.
- Backlight correction is not available in the following cases:
  - When the shooting mode is set to [Fireworks].
  - When the shooting mode is set to M and [FUNC] ➤ [Looks] is set to [3 Wide DR].
  - When infrared recording is activated.
- Backlight correction will be deactivated in the following cases:
  - When the power switch, mode switch or INFRARED switch is operated.
  - When the shooting mode is changed.
  - When the frame rate, video format or look is changed.

Zebra Pattern

You can display the zebra pattern to identify areas that might be overexposed, so you can correct the exposure appropriately. The camcorder offers two levels of zebra pattern: With 100%, only highlight areas that will lose detail will be identified, while 70% will identify also areas that are dangerously close to losing detail.

1 Open the aperture, shutter speed, gain or exposure screen.

[FUNC] ➤ [IRIS Aperture], [SHTR Shutter Speed] or [GAIN Gain] or [± Exposure Comp.]

2 Select the desired zebra level.

[ZEBRA OFF] ➤ [ZEBRA 70 70%] or [ZEBRA 100 100%] ➤ [✕]

- To return to the previous screen and change other settings, select [↩] instead of [✕].
- The zebra pattern will appear on the overexposed areas of the picture.

ⓘ NOTES

- Displaying the zebra pattern will not affect your recordings.

ND Filter

Using the ND filter allows you to open up the aperture to obtain a shallower depth of field even when recording in bright surroundings. You can also use the ND filter to avoid the soft focus caused by diffraction when using small apertures. You can select one of 3 density levels.

Operating modes: CAMERA MEDIA | AUTO M | MP4 XF-AVC

Press the ND FILTER + or – button to select the desired ND filter setting.

- Repeatedly pressing ND FILTER + button will change the ND filter setting in the following order: [ND 1/4] → [ND 1/16] → [ND 1/64] → ND filter off (no onscreen display).
  The ND FILTER – button cycles through the settings in reverse order.
- The selected ND filter setting will appear on the left of the screen.

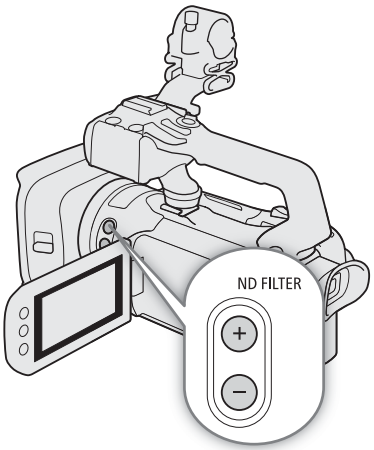

NOTES

- **About the ND warning:**
  In the following cases, if the ND filter setting is not appropriate, an ND warning icon will start flashing next to the ND filter setting*.
  - The gain value is too high.
  - The aperture is too closed.

  Change the ND filter setting so the ND filter display stops flashing to mitigate the effect of such conditions.
  * When the optional RC-V100 Remote Controller is connected to the camcorder, the RC-V100's ND filter indicator will flash as well.
- Depending on the scene, the color may change when turning the ND filter on/off. Setting a custom white balance (📖 71) may be effective in such case.
- **About changing the ND filter setting using the optional RC-V100 Remote Controller:**
  - When the remote controller is connected to the camcorder, you can use the remote controller's ND button in the same way as the camcorder's ND FILTER + button.
  - ND filter indicators 1 to 3 will illuminate in orange when the ND filter is set to 1/4, 1/16 and 1/64, respectively.

White Balance

The camcorder uses an electronic white balance process to calibrate the picture and produce accurate colors under different lighting conditions. This function can only be used when the shooting mode is set to **P**, **Tv**, **Av** or **M**.

Operating modes: CAMERA MEDIA | AUTO M | MP4 XF-AVC

1 Select [White Balance].

[FUNC] ➤ [AWB* White Balance]

* Default option. The button will show the icon of the option currently in use.

2 Select the desired option and then select [✕].

- If you selected [K Color Temperature], [1 Set 1] or [2 Set 2] and wish to change the color temperature value or register a new custom white balance, continue with the appropriate procedure below instead of selecting [✕].
- The icon of the selected option will appear on the left of the screen.

To set the color temperature ([K Color Temperature])

3 Select [ ].

- An adjustment dial will appear on the screen.

4 Drag your finger along the dial to set the color temperature value.

5 Select [✕].

To set a custom white balance ([1 Set 1] or [2 Set 2])

3 Point the camcorder at a gray card or white object so that it fills the frame at the center of the screen and then select [ ].

- When the icon inside the frame stops flashing, the procedure is completed. The setting is retained even if you turn off the camcorder.

4 Select [✕].

Options

[AWB Automatic]: The camcorder automatically sets the white balance for natural looking colors.

[Daylight]: To record outdoors on a bright day.

[Tungsten]: To record under tungsten and tungsten-type (3-wavelength) fluorescent lighting.

[K Color Temperature]: Allows you to set the color temperature between 2,000 K and 15,000 K.

[1 Set 1], [2 Set 2]: Use the custom white balance settings to make white subjects appear white under colored lighting.

NOTES

- When you select a custom white balance:
  - Do not use the digital zoom range (light blue area of the zoom bar).
  - Set the custom white balance again when the location, lighting or other conditions change.
  - Very rarely and depending on the light source, may keep flashing. The result will still be better than with [AWB Automatic].

- If you set an assignable button to [Set WB] (94), you can press the button to register a custom white balance after you point the camcorder at a gray card or white object.
- Using a custom white balance may provide better results in the following cases:
  - Changing lighting conditions
  - Close-ups
  - Subjects in a single color (sky, sea or forest)
  - Under mercury lamps, certain types of fluorescent lights and LED lights
- White balance is not available when infrared recording is activated.
- If you set an assignable button to [WB WB Priority] (94), you can press the button to switch to a frequently used white balance setting pre-selected with the MENU [Camera Setup] [Set WB Priority] setting.

Using Looks

The camcorder can shoot using looks — combinations of settings that affect the characteristics of the image produced. The camcorder offers a number of preset looks, some of whose settings you can adjust to your preference. This function can only be used when the shooting mode is set to **P**, **Tv**, **Av** or **M**.

Operating modes: CAMERA MEDIA | AUTO M | MP4 XF-AVC

1 Open the looks screen.

[FUNC] ➤ [1* Looks]

* Default option. The button will show the icon of the look currently in use.

2 Select the desired option.

- To use the preset look as is, skip to step 4.

3 If necessary, adjust the detailed settings.

[ ] ➤ Select [–] or [+] to adjust the value

- You can also drag your finger along the adjustment bar.
- The sharpness, contrast and color depth can be adjusted as follows:
  [Sharpness]: 0 (softer image) to 7 (sharper image)
  [Contrast]*: –4 (low contrast) to +4 (high contrast)
  [Color Depth]**: –4 (shallower colors) to +4 (richer colors)

4 Select [✕].

* Not available for [3 Wide DR]. ** Not available for [4 Monochrome].

Options

[1 Standard]: Standard look for general shooting situations.

[2 Neutral]: Produces an image with a more natural sense of perceived resolution.

[3 Wide DR]: Applies a gamma curve with a wide dynamic range and colors appropriate for this gamma curve.

[4 Monochrome]: Produces a black & white picture.

NOTES

- When using the [3 Wide DR] look, the lowest available gain setting is 9.0 dB. As such, when shooting outdoors in daylight or other bright surroundings, the subject may appear bright because the camcorder cannot achieve the optimal exposure.
- Looks are not available when infrared recording is activated.

Setting the Time Code

The camcorder generates a time code signal and records it with the recorded clips. The time code signal is output from the SDI OUT terminal (XA55 only) and can be output also from the HDMI OUT terminal (108).

Operating modes: CAMERA MEDIA | AUTO M | MP4 XF-AVC

Selecting the Time Code Mode

1 Select [Time Code Mode].

MENU ➤ [3 Recording Setup] ➤ [Time Code Mode]

2 Select the desired option and then select [✕].

Options

[PRESET Preset]: The time code starts from an initial value you can select in advance. The default initial time code is 00:00:00:00. See the following procedures to select the time code running mode and set the initial time code.

[REGEN. Regen.]: The camcorder will read the selected SD card and the time code will continue from the last time code recorded on the card. The time code runs only while recording so clips recorded consecutively on the same card will have continuous time codes.

Setting the Time Code Running Mode

If you set the time code mode to [PRESET Preset], you can select the time code running mode.

1 Select [Time Code Running Mode].

MENU ➤ [3 Recording Setup] ➤ [Time Code Running Mode]

2 Select the desired option and then select [✕].

Options

[REC RUN Rec Run]: The time code runs only while recording so clips recorded consecutively on the same card will have continuous time codes.

[FREE RUN Free Run]: The time code starts running the moment you confirm the selection and keeps running regardless of the camcorder's operation.

Setting the Time Code's Initial Value

If you set the running mode to [PRESET Preset], you can set the initial value of the time code.

1 Select [Initial Time Code].

MENU ➤ [3 Recording Setup] ➤ [Initial Time Code]

- The time code setting screen appears with an orange selection frame indicating the hours.
- Select [Reset] to reset the time code to [00:00:00:00] and return to the previous screen. If the running mode is set to [FREE RUN Free Run], the time code will be reset the moment you select the button and keep running continuously from 00:00:00:00.

2 Select [▲] or [▼] to set the value for the hours and then select the minutes field.

- Change the rest of the fields (minutes, seconds, frame) in the same way.

3 After completing all the fields of the time code, select [OK].
- Select [Cancel] to close the screen without changing the time code.
- If the running mode is set to [FREE RUN Free Run], the time code will start running from the time code entered the moment you select [OK].

4 Select [✕].

NOTES
- When slow & fast motion recording is activated, you cannot select the [FREE RUN Free Run] running mode. Conversely, when pre-recording is activated, [FREE RUN Free Run] is set automatically and cannot be changed.
- When slow & fast motion recording is activated, the time code signal cannot be output from the SDI OUT terminal (XA55 only) or HDMI OUT terminal.
- When you are using the [FREE RUN Free Run] running mode, the time code will continue running as long as the built-in backup battery has some charge left, even if you disconnect all other power sources. However, this is less accurate than when the camcorder is on.

Setting the User Bit

The user bit can be selected from the date or the time of recording, or an identification code consisting of 8 characters in the hexadecimal system. There are sixteen possible characters: the numbers 0 to 9 and the letters A to F. The user bit is recorded with XF-AVC clips and can be output from the SDI OUT terminal (XA55 only) and HDMI OUT terminal.

Operating modes: CAMERA MEDIA | AUTO M | MP4 XF-AVC

Setting an Hexadecimal Code

1 Open the [User Bit Settings] screen.

MENU ➤ [3 Recording Setup] ➤ [User Bit Type] ➤ [SET Setting] ➤ [ ]

- The user bit setting screen appears with an orange selection frame on the leftmost character.
- Select [Reset] to reset the user bit to [00 00 00 00] and return to the previous screen.

2 Select a character you want to change and then select [▼] or [▲] to change it as necessary.

- Change the rest of the characters in the same way.

3 Select [OK] and then select [✕].

- Select [Cancel] to close the screen without changing the user bit.

Using the Date or Time

1 Select [User Bit Type].

MENU ➤ [3 Recording Setup] ➤ [User Bit Type]

2 Select [DATE Date] or [TIME Time] and then select [✕].

NOTES

- The user bit will not be recorded with MP4 clips recorded to the card.

Recording Audio

The camcorder features 4-channel linear PCM (LPCM) or 2-channel AAC audio recording and playback for MP4 clips, and 4-channel LPCM audio recording and playback for XF-AVC clips. The sampling frequency is 48 kHz. You can record audio using the INPUT terminals* (commercially available microphones or analog line-in audio sources), the MIC terminal (commercially available microphones) or the built-in microphone.
The audio signal will be output along with the video signal from the SDI OUT terminal (XA55 only) and HDMI OUT terminal. You can record this audio signal on an external recorder.
* Requires that the handle unit be correctly attached to the camcorder.

Operating modes: CAMERA MEDIA | AUTO M | MP4 XF-AVC

Selecting the Audio Format of MP4 Clips

When recording MP4 clips, you can set the audio format to AAC (2 channels, 16 bit) or LPCM (linear PCM, 4 channels, 16 bit).

Operating modes: CAMERA MEDIA | AUTO M | MP4 XF-AVC

1 Select [MP4 Audio Format].
MENU ➤ [1 Recording Setup] ➤ [MP4 Audio Format]

2 Select the desired option and then select [✕].

NOTES

- Select AAC format when versatility (the ability to play back on most devices) is more important. Select LPCM format when audio quality is the priority.

Audio Settings and Recorded Audio Channels

Which audio inputs are recorded to which audio channels is determined by a combination of menu settings, whether the handle unit is attached, and other audio-related controls on the camcorder. The following table gives an overview of the possible combinations. Refer also to the illustration following the table.

Microphone connected to the MIC terminal	AUDIO IN switch		Menu settings [♪) 1 Audio Setup] ➤		Recorded audio channels/audio sources			
	for INPUT 1	for INPUT 2	[CH2 Input]	[CH3/CH4 Input]*	CH1	CH2	CH3*	CH4*
–	INPUT1	INPUT2	[INPUT2 INPUT 2]	[INPUT INPUT Terminal]	INPUT 1 terminal	INPUT 2 terminal	INPUT 1 terminal	INPUT 2 terminal
	INPUT1	INPUT2	[INPUT1 INPUT 1]	[INPUT INPUT Terminal]		INPUT 1 terminal		
Yes	INPUT1	INPUT2	[INPUT2 INPUT 2]	[INT/MIC Built-in Mic/ MIC Terminal]		INPUT 2 terminal	MIC terminal (L)	MIC terminal (R)
	INPUT1	INPUT2	[INPUT1 INPUT 1]	[INT/MIC Built-in Mic/ MIC Terminal]		INPUT 1 terminal		
	INPUT1	INT.MIC/ MIC	–	–		MIC terminal (mono)		
	INT.MIC/ MIC	INPUT2	–	–	MIC terminal (mono)	INPUT 2 terminal		
No	INPUT1	INPUT2	[INPUT2 INPUT 2]	[INT/MIC Built-in Mic/ MIC Terminal]	INPUT 1 terminal		Built-in microphone (L)	Built-in microphone (R)
	INPUT1	INPUT2	[INPUT1 INPUT 1]	[INT/MIC Built-in Mic/ MIC Terminal]		INPUT 1 terminal		
	INPUT1	INT.MIC/ MIC	–	–		Built-in microphone (mono)		
	INT.MIC/ MIC	INPUT2	–	–	Built-in microphone (mono)	INPUT 2 terminal		
Yes	INT.MIC/ MIC	INT.MIC/ MIC	–	–	MIC terminal (L)	MIC terminal (R)		
No	INT.MIC/ MIC	INT.MIC/ MIC	–	–	Built-in microphone (L)	Built-in microphone (R)		
Yes	Handle unit not attached		–	–	MIC terminal (L)	MIC terminal (R)		
No			–	–	Built-in microphone (L)	Built-in microphone (R)		

* For MP4 clips, only when MENU ➤ [Recording Setup] ➤ [MP4 Audio Format] is set to [4CH LPCM 16bit 4CH].

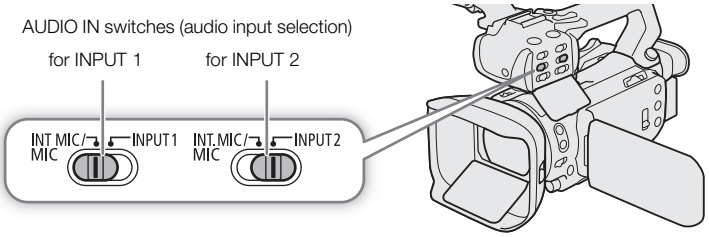

Connecting an External Microphone or External Audio Input Source to the Camcorder

To each of the INPUT terminals you can attach commercially available microphones or analog line-in sources with an XLR connector. To use the INPUT terminals and microphone holder, the handle unit must be correctly attached to the camcorder. To the MIC terminal you can attach commercially available condenser microphones with a ∅ 3.5 mm stereo mini plug.
Follow the procedure below to attach a microphone (refer also to the following illustration). To connect an external device to the camcorder, plug the device's cable into the desired INPUT terminal (④).

1 Loosen the microphone lock screw (①), open the microphone holder and insert the microphone (②).

2 Tighten the lock screw and put the microphone cable through the microphone cable clamp under the microphone holder (③).

3 Plug the microphone cable into the desired INPUT terminal (④) or the MIC terminal (⑤).

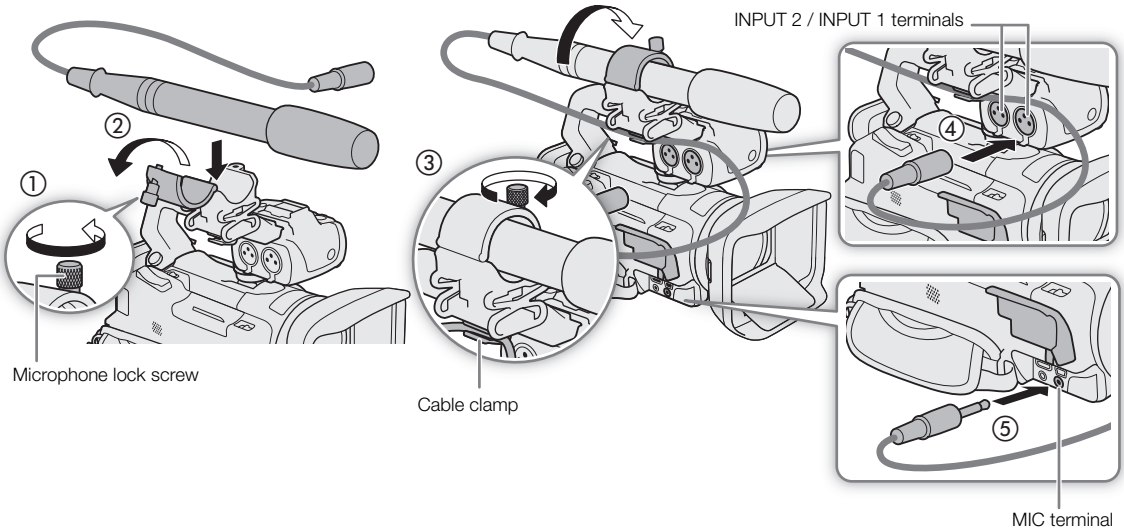

Recording Audio from the INPUT Terminals to CH1/CH2

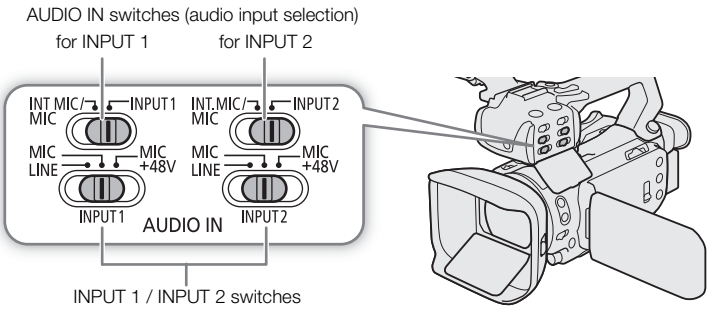

1 Set the corresponding AUDIO IN switch to INPUT 1 or INPUT 2.
- You can record the audio input from the INPUT terminals also to CH3/CH4 (□ 80).

2 To select the audio source, set the corresponding INPUT switch to MIC (microphone) or LINE (audio device).
- To supply a microphone with phantom power, set the switch to MIC+48V instead. Make sure to connect the microphone first, before turning the phantom power on. Keep the microphone connected when turning off the phantom power.

Recording the Same Audio Input to Two Channels

By default, when using the INPUT terminals, each audio input is recorded to a separate audio channel (INPUT 1 to CH1 and INPUT 2 to CH2). If necessary (for example, as an audio backup recording), you can record the audio input into the INPUT 1 terminal to both audio channels, CH1 and CH2. In that case, you can adjust the audio recording levels of each channel independently of each other.

1 Select [CH2 Input].
  MENU ➤ [♪) 1 Audio Setup] ➤ [CH2 Input]
2 Select the desired option and then select [✕].

Options

[INPUT2 INPUT 2]: Records audio to each channel separately. Audio input into INPUT 1 is recorded to CH1, while audio input into INPUT 2 is recorded to CH2.

[INPUT1 INPUT 1]: Audio input into INPUT 1 is recorded to both channels. Audio input into INPUT 2 will not be recorded.

Selecting the Audio Input Recorded to CH3/CH4

When the audio format is LPCM (4-channel audio recording) and CH1/CH2 are set to the INPUT terminals, you can select the audio input that will be recorded to channels CH3/CH4 (📖 78).

1 Select [CH3/CH4 Input].
  MENU ➤ [♪) 1 Audio Setup] ➤ [CH3/CH4 Input]
2 Select the desired option and then select [✕].
  - When [INT/MIC Built-In Mic/MIC Terminal] is selected, the camcorder will record audio from the built-in microphone unless an external microphone is connected to the MIC terminal.

Recording Audio from the Built-In Microphone or MIC Terminal to CH1/CH2

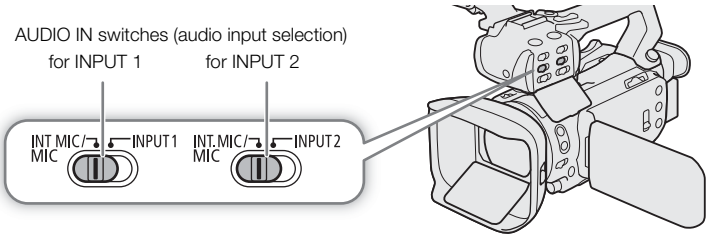

1 If the handle unit is connected to the camcorder, set the corresponding AUDIO IN switch to INT.MIC/MIC.
2 To use an external microphone, connect it to the MIC terminal.
  - You can supply power to an external microphone compatible with plug-in power (📖 84).
  - The camcorder will record audio from the built-in microphone unless an external microphone is connected to the MIC terminal.

Adjusting the Audio Recording Level

You can adjust the audio recording level of the various audio channels using the audio controls on the handle unit or the audio screen in the FUNC menu. The audio screen shows an overview of the audio channels used and, for each audio channel: the audio input currently selected, whether the audio recording level is adjusted automatically or manually and the audio level indicator.

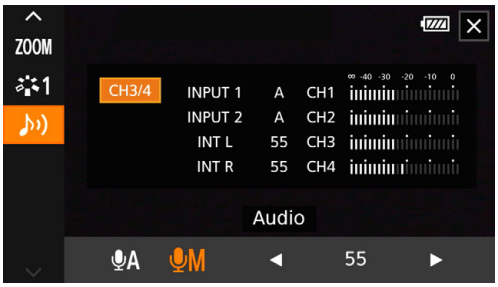

Automatic Audio Level Adjustment for CH1 or CH2

When the handle unit is attached to the camcorder, set the audio level switch of the desired channel to A (automatic) to let the camcorder automatically adjust that channel's audio level. If the handle unit is not attached, adjust the audio levels using the FUNC menu (82).

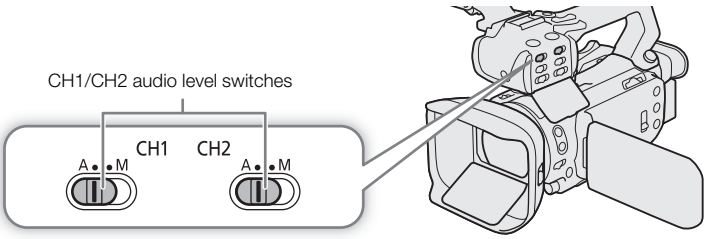

Automatic Level Control (ALC): Linking or separating the audio adjustment of CH1/CH2 or CH3/CH4 (INPUT terminals / MIC terminal)

When the INPUT 1 and INPUT 2 switches are both set to the same type of audio source (line input or microphone), you can link the audio level adjustment for both inputs with the MENU ➤ [♪) Audio Setup] ➤ [INPUT 1/2 ALC Link] setting. When the [LINK Linked] option is selected, you can use CH1's audio level switch and dial to adjust both CH1 and CH2 (82), or select [CH3/4] in the FUNC menu's audio screen to adjust both CH3 and CH4 (82).

Conversely, you can set MENU ➤ [♪) Audio Setup] ➤ [MIC ALC Link] to [SEP. Separated] in order to separate the audio level adjustment for the L and R channels of an external microphone connected to the MIC terminal. This allows you to adjust each channel independently in the FUNC menu's audio screen (82).

Manual Audio Level Adjustment for CH1 or CH2

When the handle unit is attached to the camcorder, adjust the audio level using the controls on the handle unit. If the handle unit is not attached, adjust the audio levels using the FUNC menu (82).

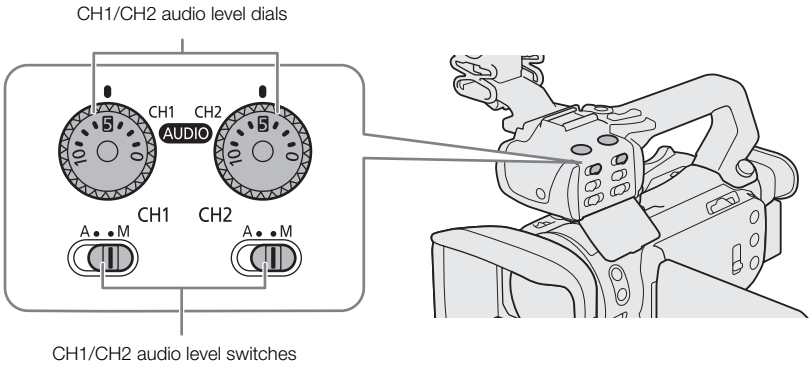

1 Set the audio level switch of the desired channel to M (manual).

2 Turn the corresponding audio level dial.
- For reference, 0 corresponds to –∞, 5 corresponds to 0 dB, and 10 corresponds to +18 dB.
- As a guideline, adjust the audio recording level so that the audio level meter on the screen will go to the right of the –18 dB mark (one mark right of the –20 dB mark) only occasionally.

3 Close the protective cover to prevent the audio controls from being changed inadvertently.

Audio Level Adjustment Using the FUNC Menu

When the audio format is LPCM (4-channel audio recording), use the audio screen in the FUNC menu to adjust the audio recording levels for CH3 and CH4. If the handle unit is not attached to the camcorder, you must use the audio screen to adjust the audio recording levels for CH1 and CH2 as well.

1 Open the audio screen.
[FUNC] [Audio]

2 Select the channel or pair of channels to adjust.

3 Select [Automatic] or [Manual].
- If you selected automatic adjustment, skip to step 5. If you selected manual adjustment, continue the procedure to adjust the audio recording level.

4 Touch and hold [◀] or [▶] to adjust the recording level as necessary.
- As a guideline, adjust the audio recording level so that the audio level meter on the screen will go to the right of the –18 dB mark (one mark right of the –20 dB mark) only occasionally.

5 Select [✕].

NOTES
- When the audio level meter reaches the red point (0 dB), the sound may be distorted.
- If the audio level display is normal but the sound is distorted, activate the microphone's attenuator (83, 84).
- We recommend using headphones to check the sound level while adjusting the audio recording level or when the microphone attenuator is activated.

Audio peak limiter

- If at least one of the channels is set to the INPUT terminals and manual audio level adjustment, you can activate the audio limiter to lessen audio distortions. When activated, the audio limiter will limit the amplitude of audio input signals when they start to distort. Use the MENU ➔ [♪)) 2 Audio Setup] ➔ [INPUT 1/2 Limiter] setting.

Advanced Audio Input Settings

Microphone Sensitivity (INPUT Terminals)

When one of the audio channels is set to the INPUT terminals and the corresponding INPUT1 or INPUT2 switch is set to MIC or MIC+48V, you can select the external microphone's sensitivity.

1 Select the desired INPUT terminal's sensitivity.
   MENU ➔ [♪)) 1 Audio Setup] ➔ [INPUT 1 Mic Trimming] or [INPUT 2 Mic Trimming]
2 Select the desired option and then select [✕].

Microphone Attenuator (INPUT Terminals)

When one of the audio channels is set to the INPUT terminals and the corresponding INPUT1 or INPUT2 switch is set to MIC or MIC+48V, you can activate the external microphone's attenuator (20 dB).

1 Select the desired INPUT terminal's attenuator.
   MENU ➔ [♪)) 1 Audio Setup] ➔ [INPUT 1 Mic Att.] or [INPUT 2 Mic Att.]
2 Select [ON On] and then select [✕].
   - ATT appears on the right of the screen.

Microphone Sensitivity (Built-in Microphone)

When one of the audio channels is set to the built-in microphone/MIC terminal and no external microphone is connected to the MIC terminal, you can increase the built-in microphone's sensitivity.

1 Select [Built-in Mic Sensitivity].
   MENU ➔ [♪)) 2 Audio Setup] ➔ [Built-in Mic Sensitivity]
2 Select the desired option and then select [✕].

Options

[NORM Normal]: For recording audio under usual conditions.
[HIGH High]: For recording audio at a higher level (+6 db).

Microphone Attenuator (Built-in Microphone)

When one of the audio channels is set to the built-in microphone/MIC terminal and no external microphone is connected to the MIC terminal, you can activate the built-in microphone's attenuator (20 dB) to prevent audio distortions when the audio level is too high.

1 Select [Built-in Mic Att.].
   MENU ➔ [♪)) 2 Audio Setup] ➔ [Built-in Mic Att.]
2 Select [ON On] and then select [✕].
   - ATT appears on the right of the screen.

Low-Cut Filter (Built-in Microphone)

When one of the audio channels is set to the built-in microphone/MIC terminal and no external microphone is connected to the MIC terminal, you can activate the low cut filter to reduce the sound of blowing wind and other ambient sounds when recording outdoors. When recording in surroundings unaffected by wind or if you want to record low-frequency sounds, we recommend turning off the low-cut filter.

1 Select [Built-in Mic Low Cut].
   MENU ➤ [♪)) 2 Audio Setup] ➤ [Built-in Mic Low Cut]
2 Select [ON On] and then select [✕].

Microphone Attenuator (MIC Terminal)

When one of the audio channels is set to the built-in microphone/MIC terminal, you can activate the microphone attenuator (20 dB) for an external microphone connected to the MIC terminal to prevent audio distortions when the audio level is too high.

1 Select [MIC Att.].
   MENU ➤ [♪)) 2 Audio Setup] ➤ [MIC Att.]
2 Select [ON On] and then select [✕].
   • ATT appears on the right of the screen.

Low-Cut Filter (MIC Terminal)

When one of the audio channels is set to the built-in microphone/MIC terminal, you can activate the low-cut filter for an external microphone connected to the MIC terminal. The low-cut filter reduces the sound of blowing wind and other ambient sounds when recording outdoors. When recording in surroundings unaffected by wind or if you want to record low-frequency sounds, we recommend turning off the low-cut filter.

1 Select [MIC Low Cut].
   MENU ➤ [♪)) 3 Audio Setup] ➤ [MIC Low Cut]
2 Select [ON On] and then select [✕].

Plug-in Power (MIC Terminal)

You can supply plug-in power to an external microphone connected to the MIC terminal.

1 Select [MIC Power].
   MENU ➤ [♪)) 3 Audio Setup] ➤ [MIC Power]
2 Select [ON On] and then select [✕].

ⓘ NOTES

- Connecting an external microphone that does not require power supply when [MIC Power] is set to [ON On], may damage the microphone.

Using Headphones

Connect headphones with a ∅ 3.5 mm stereo mini plug to the 🎧 (headphone) terminal for playback or to monitor the recorded audio.

Operating modes: CAMERA MEDIA | AUTO M | MP4 XF-AVC

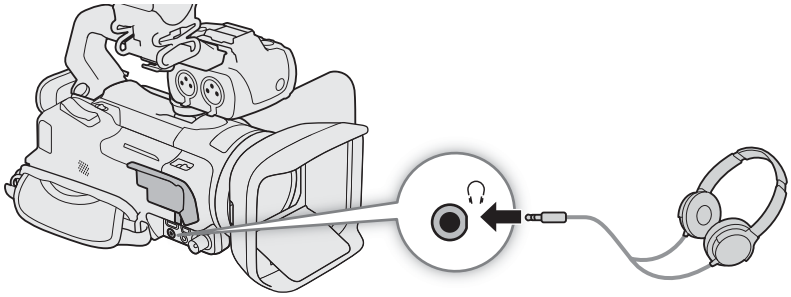

1 Select [Headphone Volume].

MENU ➤ [♪)) 3 Audio Setup] ➤ [Headphone Volume]

2 Select [🎧›] or [🎧))] to adjust the volume and then select [✕].

- You can also drag your finger along the volume bar.

To adjust the volume during playback

During playback, you can also adjust the headphones volume in the same way you adjust the speaker's volume (📖 99).

IMPORTANT

- When using headphones, make sure to lower the volume to an appropriate level.

Color Bars/Audio Reference Signal

You can have the camcorder generate color bars and a 1 kHz audio reference signal and output them from the SDI OUT terminal (XA55 only), HDMI OUT terminal and 🎧 (headphone) terminal*.

* Audio reference signal only.

Operating modes: CAMERA MEDIA | AUTO M | MP4 XF-AVC

Color Bars

You can choose between EBU and SMPTE color bars.

1 Select [Color Bars].

MENU ➤ [4 Recording Setup] ➤ [Color Bars]

2 Select the desired option and then select [✕].

- The selected color bars appear on the screen and will be recorded when you press the REC button.

ⓘ NOTES

- You cannot change the type of color bars while recording.
- Color bars cannot be used together with slow & fast motion recording.

Audio Reference Signal

The camcorder can output a 1 kHz audio reference signal with the color bars. You can select one of three audio levels (–12 dB, –18 dB, –20 dB).

1 Select [1 kHz Tone].

MENU ➤ [5 Recording Setup] ➤ [1 kHz Tone]

2 Select the desired option and then select [✕].

- The signal is output at the selected level and will be recorded when you press the REC button.

Pre-Recording

When pre-recording is activated, the camcorder starts recording continuously into a temporary memory (approx. 3 seconds) so when you press the REC button, the clip will contain also a few seconds of video and audio recorded before you pressed the button.

Operating modes: CAMERA MEDIA | AUTO M | MP4 XF-AVC

1 Press the PRE REC button.
- Pre-recording is activated and appears at the top of the screen.
- Press the button again to turn off pre-recording.

2 Press the REC button.
- The clip recorded on the card will include a few seconds of video and audio recorded before the REC button was pressed.

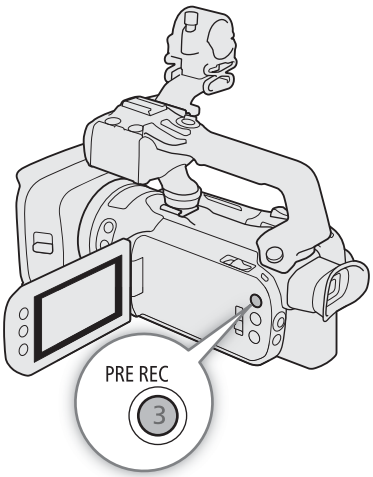

NOTES
- The camcorder will not record the full 3 seconds prior to pressing the REC button if the button was pressed within 3 seconds of having turned on pre-recording or having finished the previous recording.
- Pre-recording cannot be used together with slow & fast motion recording.
- Pre-recording will be deactivated in the following cases:
  - When the power switch or mode switch is operated.
  - When a menu is opened.
  - When the shooting mode, white balance or look is changed.
  - When the card compartment cover is opened or the card selected for recording clips becomes full.
- About the time code when pre-recording is activated:
  - The time code of the clip will start a few seconds before the REC button was pressed.
  - The time code will be recorded with the running mode set to [FREE RUN Free Run].
  - If the time code mode was set to [REGEN. Regen.], or to [PRESET Preset] with [REC RUN Rec Run] running mode, the time code running mode will be changed automatically to [FREE RUN Free Run] when pre-recording is activated.
  - When pre-recording is turned off, the time code running mode will return to its previous setting.

Infrared Recording

In infrared mode the camcorder becomes more sensitive to infrared light, allowing you to record in dark locations. You can select the color of brighter areas of the picture (white or green). When the handle unit is attached to the camcorder, you can also use the handle unit's infrared light to make recordings even brighter.

Operating modes: CAMERA MEDIA | AUTO M | MP4 XF-AVC

1 Set the INFRARED switch to ON.
- IR and OFF appear at the top left of the screen.

2 To change the color of highlights in the infrared picture, select [IR Rec Color].
MENU ➤ [5 Camera Setup] ➤ [IR Rec Color]

3 Select the desired option and then select [↩].

4 To turn on the infrared light, select [IR Light].
MENU ➤ [5 Camera Setup] ➤ [IR Light]

5 Select [ON On] and then select [✕].
- When the infrared light is on, OFF changes to ON.

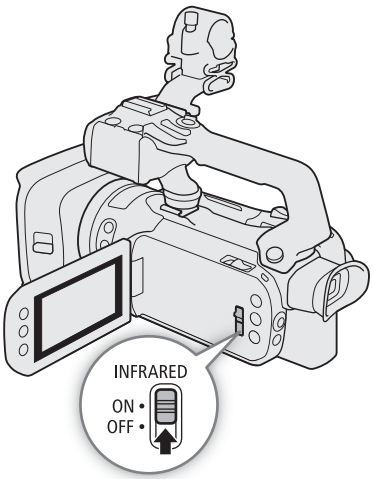

NOTES

- While infrared mode is activated, the following apply.
  - The aperture remains fully open, the ND filter remains retracted and the camcorder switches to automatic shutter speed and gain.
  - Exposure compensation is set to automatic and the AGC limit, backlight correction (both automatic and constant) and face detection & tracking are deactivated.
  - The camcorder switches to autofocus initially with the AF mode fixed at continuous AF but you can switch between autofocus and manual focus. The focusing distance display is grayed out.
  - The white balance switches to a special setting for infrared mode and cannot be changed.
  - The shooting mode and looks cannot be set.
- If you set an assignable button to [IR Light] (📖 94), you can press the button to turn the infrared light on/off.
- Depending on the light source, autofocus may not work well while zooming.
- In infrared mode the camcorder's sensor is considerably more sensitive to near-infrared light. Do not point the lens at strong light or heat sources when infrared recording is activated. If there are such light/heat sources in the picture, we recommend shielding the lens before switching the camcorder to infrared mode.

Using the Optional RC-V100 Remote Controller

You can connect the optional RC-V100 Remote Controller to the camcorder's REMOTE terminal in order to control the camcorder (including advanced recording functions) from a distance. The remote controller lets you turn the camcorder on, navigate the menus and remotely control the aperture and shutter speed, and more. Use the cable supplied with the remote controller to connect it to the camcorder. For details on how to connect and use the remote controller, refer to its instruction manual.

Operating modes: CAMERA MEDIA | AUTO M | MP4 XF-AVC

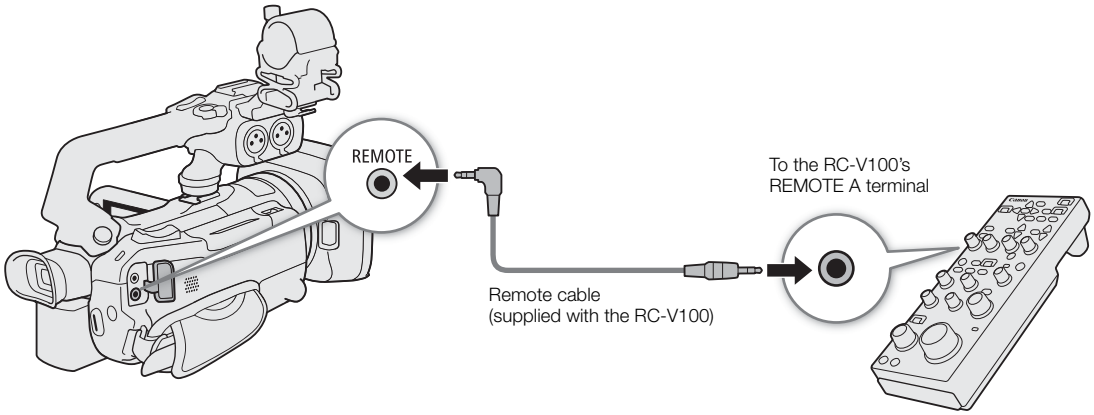

1 Turn off the camcorder and connect the optional RC-V100 Remote Controller to the camcorder.

2 Turn on the camcorder in CAMERA mode and select [REMOTE Terminal].

MENU ➤ [2 System Setup] ➤ [REMOTE Terminal]

3 Select [RC-V100 RC-V100 (REMOTE A)] and then select [✕].

Options

[RC-V100 RC-V100 (REMOTE A)]: Select this option to use the optional RC-V100 Remote Controller.

[Std. Standard]: Select this option to use commercially available remote controls.

ⓘ NOTES

- The following controls on the remote controller will not operate the camcorder:
  - CUSTOM PICT. button
  - SHUTTER SELECT button
  - AGC button
  - AUTO KNEE button
  - KNEE POINT, KNEE SLOPE dials
  - BLACK GAMMA LEVEL dial
  - SHARPNESS LEVEL dial
  - WHITE BALANCE R and B dials
  - MASTER BLACK R and B dials
  - MASTER PEDESTAL dial
  - AUTO IRIS button
  - CANCEL button

Using the Optional GP-E2 GPS Receiver

When the optional GP-E2 GPS Receiver is connected to the camcorder's USB terminal, the camcorder will automatically record the GPS information (longitude, latitude and altitude) with every recording you make (MP4 clips, XF-AVC clips and photos). For MP4 clips and photos, the UTC (coordinated universal time) date and time will be recorded as well. For XF-AVC clips, the GPS information is recorded as part of the clip's metadata and can be used to organize and search recordings using **Canon XF Utility** (📖 113).
The recorded GPS information can be checked on the clip information screen or photo playback screen (single photo view).

Operating modes: CAMERA MEDIA | AUTO M | MP4 XF-AVC

Connecting the GPS Receiver

Turn off the camcorder and the receiver. Connect the receiver to the camcorder's USB terminal using the USB cable*. While recording, place the receiver in the carrying case* and attach it to the camcorder's grip belt or carry it on your person. For details about connecting and using the receiver, refer to the GP-E2 Instruction Manual.
* Supplied with the receiver.

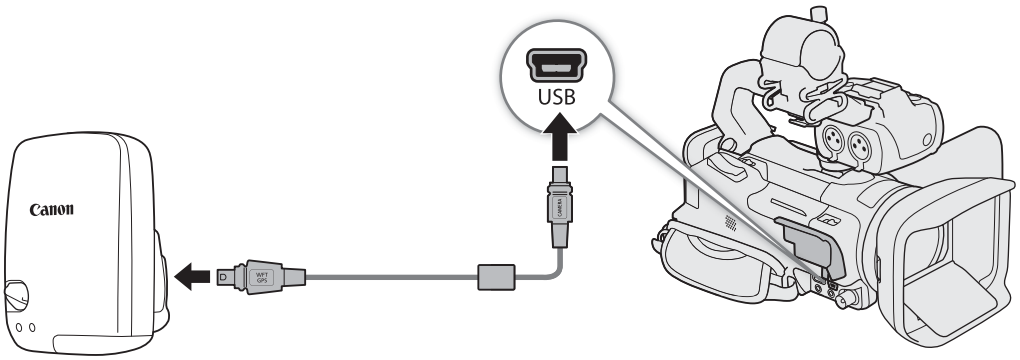

Activating the GPS Receiver

Turn on the camcorder and receiver.

- The icon appears on the left of the screen and will flash as the receiver tries to acquire satellite signals.
- When satellite signals are correctly acquired, the icon will stay continuously on. GPS functions will be activated and clips and photos recorded thereafter will be geotagged.

To adjust the date and time automatically according to the GPS data

You can set MENU ➤ [System Setup] ➤ [GPS Auto Time Setting] to [ON Auto Update] to have the camcorder automatically adjust its date and time settings according to the information received from the GPS signal. The date and time will be updated automatically the first time a correct GPS signal is acquired after turning on the camcorder.

- While the automatic date/time adjustment is activated, the MENU ➤ [System Setup] ➤ [Date/Time] setting will not be available.
- The time will not be updated while recording video.

IMPORTANT

- In certain countries/regions, the use of GPS may be restricted. Be sure to use the GPS receiver in accordance with local laws and regulations of the country/region where the receiver is used. Be particularly careful when traveling outside of your home country.
- Be careful about using GPS functions where the operation of electronic devices is restricted.
- The GPS information recorded with clips and photos may contain data that can lead others to locate or identify you. Be careful when sharing geotagged recordings with others or when uploading them to the Web.
- Do not leave the GPS receiver near strong electromagnetic fields such as near powerful magnets and motors.

NOTES

- The GPS information recorded with clips corresponds to the location at the start of the recording.
- Do not place cables connected to the SDI OUT terminal (XA55 only) or HDMI OUT terminal near the receiver. Doing so may negatively affect the GPS signal.
- Initial GPS signal reception will take longer after replacing the receiver’s battery or when first turning on the receiver after a prolonged period of having been turned off.
- The camcorder is not compatible with the receiver's digital compass and positioning interval functions. Also, the [Set Now] option is not available for the [GPS Auto Time Setting] setting.

CUSTOM Dial and Button

You can assign to the CUSTOM button and dial one of several frequently used functions. You can then adjust the selected function using the CUSTOM button and dial, without having to access the menu.

Operating modes: CAMERA MEDIA | AUTO M | MP4 XF-AVC

1 Press and hold the CUSTOM button.
- After about a second, a quick menu of the options will appear.

2 Turn the CUSTOM dial to select the desired function and then press the CUSTOM button.

3 Press the CUSTOM button and turn the CUSTOM dial to use the assigned function as described in the following explanations.
- The onscreen value that can be adjusted using the CUSTOM dial will be highlighted in orange.

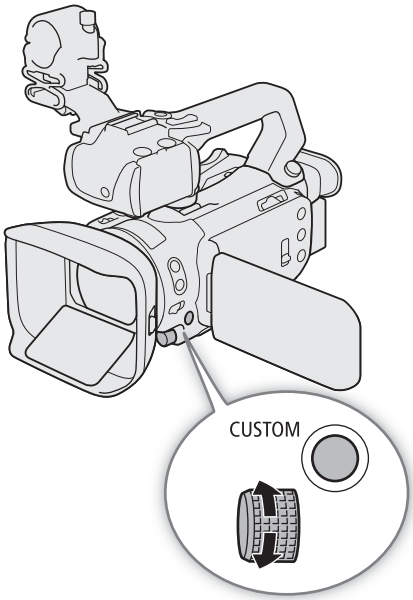

NOTES
- You can also use the MENU ➤ [3 System Setup] ➤ [CUSTOM Dial & Button] setting to select the assigned function.

Options

[Tv/Av/M Tv / Av / M]:
When the shooting mode is set to Tv or Av, turn the CUSTOM dial to adjust the shutter speed or aperture value, respectively.
When the shooting mode is set to M, press the CUSTOM button repeatedly to select the value you wish to adjust (aperture value → shutter speed → gain value). While the desired value is highlighted in orange, turn the dial to adjust it.

[GAIN AGC Limit]:
Press the CUSTOM button to turn the AGC limit on/off. When the AGC limit is activated, turn the dial to set the maximum gain value.

[Exposure Comp.]:
Press the CUSTOM button to lock the exposure and, if necessary, turn the dial to compensate the exposure (exposure lock + compensation).

[OFF Off]: Disables the CUSTOM button and dial.

Assignable Buttons

The camcorder offers 5 assignable buttons on the camcorder's body and an onscreen button (touch operation) to which you can assign various functions (assignable buttons). Assign often-used functions to the buttons you find most convenient, to personalize the camcorder to your needs and preferences.
The names of the buttons printed on the camcorder also indicate their default settings. The onscreen assignable button will show only the icon of the function currently assigned to it. Assigned functions can be changed only in CAMERA mode.

Operating modes: CAMERA MEDIA | AUTO M | MP4 XF-AVC

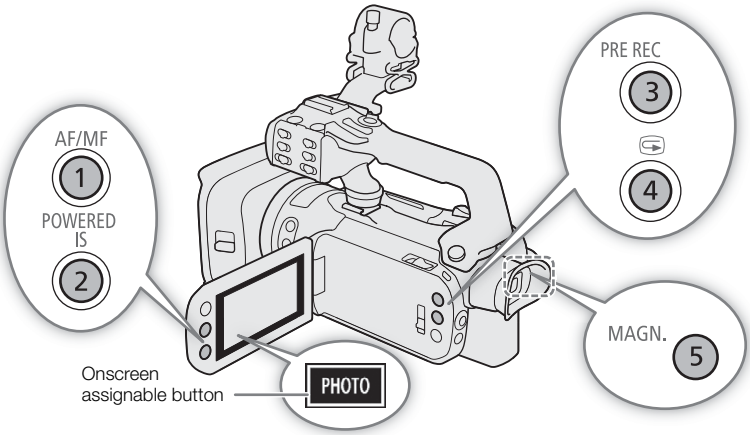

1 Physical buttons: Press the MENU button and, while holding it pressed down, press the assignable button whose function you wish to change.
Onscreen assignable button: Select [Onscreen Assignable Button].

MENU ➤ [3 System Setup] ➤ [Onscreen Assignable Button]

- A list of available functions appears with the current function assigned to the button highlighted.

2 Select the desired function and then select [✕].

- If necessary, select [▲]/[▼] to scroll up/down.

3 Press the assignable button (or touch the onscreen assignable button) to use the assigned function as described in the following table.

- In MEDIA mode, only an assignable button set to [CH/CH Monitor Channels] or [MENU Menu] can be used.

Assignable functions

Function name	Description	📖
[AF/MF AF/MF]	Switches between autofocus and manual focus.	47
[Face Only AF]	Switches between standard autofocus and autofocus only when a face is detected.	54
[MAGN. Magnification]	Turns magnification on/off.	50
[Focus Guide]	Turns the focus guide on/off.	49
[BLC Always On]	Turns the constant backlight correction function on/off.	68
[Powered IS]	Turns powered IS on/off.	60
[Set WB]*	Registers a custom white balance setting.	71
[WB WB Priority]	Switches between the current white balance setting and a priority white balance setting registered with the MENU ➤ [Camera Setup] ➤ [Set WB Priority] setting.	117
[IR Light]**	When infrared recording is activated, turns the camcorder's infrared light on/off.	88
[Pre REC]	Turns pre-recording on/off.	87
[REC REVIEW Rec Review]	Reviews the last clip recorded.	39
[PHOTO Photo]	Records a photo.	38
[CH/CH Monitor Channels]	Changes the audio channels output from the (headphone) terminal.	110
[MENU Menu]	Opens/closes the setup menus.	29
[OFF Off]	No function assigned – the button is disabled.	—

* Available only for physical assignable buttons.
** Requires that the handle unit be correctly attached to the camcorder.

NOTES

- You can also use the MENU ➤ [System Setup] ➤ [Assignable Button 1] to [Assignable Button 5] settings to change the function assigned to physical buttons.

Saving and Loading Menu Settings

After you adjust settings in the various menus, you can save those settings on an SD card. Only SD card B can be used to save and load menu settings files. You can load those settings at a later date or on another XA55 / XA50 camcorder so that you can use that camcorder in the same way.

Operating modes: CAMERA MEDIA | AUTO M | MP4 XF-AVC

Saving Menu Settings

1 Insert the card where you want to save the menu settings into SD card slot B.

2 Select [Save].

MENU ➤ [3 System Setup] ➤ [Backup Menu Settings B] ➤ [Save]

3 Select [Yes].

- The camcorder's menu settings will be saved to the card. If menu settings were previously saved, the old file will be overwritten by the current menu settings.

4 When the confirmation message appears, select [OK].

Loading Menu Settings

1 Insert the card with the desired menu settings file into the camcorder's SD card slot B.

2 Select [Load].

MENU ➤ [3 System Setup] ➤ [Backup Menu Settings B] ➤ [Load]

3 Select [Yes].

- The camcorder's menu settings will be replaced by the settings saved on the card. Then, the screen will turn black momentarily and the camcorder will restart.

Playback

This section explains how to play back clips and photos. For details on playing back recordings using an external monitor, refer to *Connecting to an External Monitor* (📖 107).

Operating modes: CAMERA MEDIA | AUTO M | MP4 XF-AVC

The Playback Index Screen

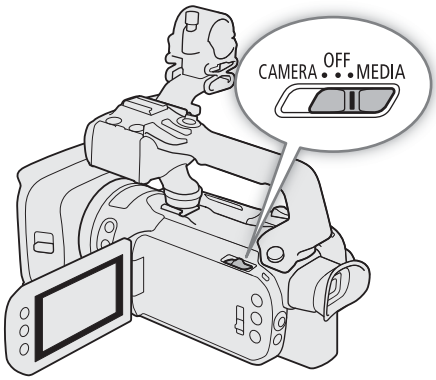

1 Set the power switch to MEDIA.

- The camcorder switches to MEDIA mode and the clip index screen appears.

2 Look for the clip you wish to play back.

- Swipe left/right or touch [◀]/[▶] to check other index pages.
- To view photos or play back recordings on the other card, change the index screen.

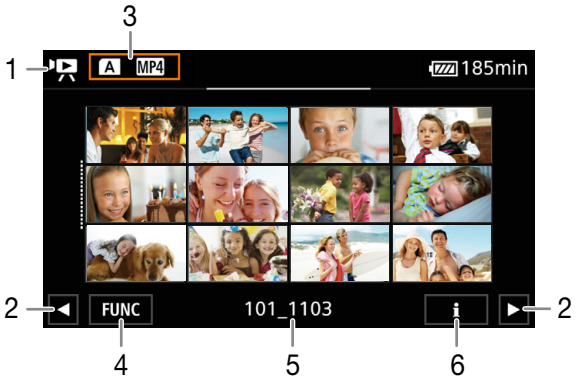

1 : Clip index screen
: Photo index screen.
2 Display the next/previous index page.
You can also swipe left/right on the screen.
3 Index screen button: Select to change the index screen.
4 [FUNC] button: Clip/photo operations (📖 101).
5 MP4 clips/photos only: Folder name. The last 4 digits indicate the recording date (1103 = November 3).
6 Clips only: Clip information (📖 100).

Changing the Index Screen

Change the index screen to play back a different type of recording (clips or photos), clips in a different format (MP4 MP4 clips or XF-AVC XF-AVC clips) or recordings on a different card (A or B).

Select the index screen button and then select the desired index screen.

- You can also press the button on the supplied wireless controller to open the index selection screen.

Playing Back Recordings

1 In the index screen, touch the thumbnail of the desired recording.

- **Clips**: Playback will start from the selected clip until the last clip in the index screen.
  Photos: The selected photo will be displayed. Swipe left/right to view other photos.

2 Touch the screen to display the playback controls.

- During video or photo playback, the playback controls will disappear automatically after a few seconds. In video playback pause, touch the screen again to hide the playback controls.

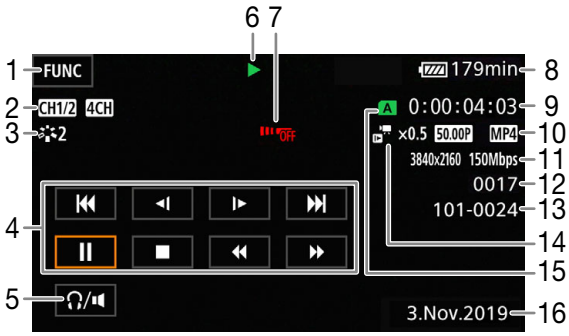

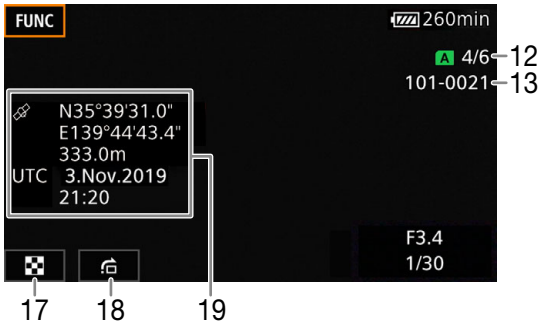

1 [FUNC] button: Clip/photo operations (📖 101)
2 Output audio channels (📖 110), MP4 audio format (📖 77)
3 Look (📖 73)
4 Clip playback controls (📖 99)
5 Volume (📖 99)
6 Clip playback operation (📖 99)
7 Wireless controller disabled (📖 121)
8 Remaining battery charge (📖 42)
9 Time code (📖 74)
10 Frame rate (📖 44) and video format (📖 44)
11 Resolution and bit rate (📖 44)
12 Clips: Clip number
Photos: Photo number / Total number of photos
13 MP4 clips/photos only: File number (📖 119)
14 Slow & fast motion rate (📖 46)
15 SD card selected for playback (📖 97)
16 Data code (📖 118)
17 Return the photo index screen
18 Photo jump (📖 99)
19 GPS information* (📖 90)

* Only when the optional GP-E2 GPS receiver was used when recording the photo.

IMPORTANT

- You may not be able to play back with this camcorder movies recorded on an SD card using another device.
- The following image files may not be displayed correctly.
  - Images not recorded with this camcorder.
  - Images edited on a computer.
  - Images whose file names have been changed.

NOTES

- You can turn off the recording date and time display or change the information displayed with the **MENU** ➤ [▶ Playback Setup] ➤ [Data Code] setting. The icon in the name of the setting and available options depend on the type of recording being played back.
- Depending on the recording conditions, you may notice brief stops in video or sound playback between clips.

Playback Controls

The following playback types are available using the onscreen controls. Using the joystick, push the joystick to select the desired button and then press the joystick. For clip playback, you can also use the playback buttons on the supplied wireless controller.

Clip playback controls

Playback type	Operation	Onscreen icon
Fast playback*	During playback, select [◀◀] / [▶▶]. • Select repeatedly to increase the playback speed to approximately 5x → 15x → 60x the normal speed. • During fast playback, select [▶] to return to playback at normal speed.	x00 ▶▶ ◀◀ x00
Slow playback*	Select [◄▌] / [▌►]. • Select repeatedly to change the playback speed to approximately 1/4 → 1/8 the normal speed.	x1/0 ▌► ◄▌ x1/0
Frame reverse/advance*	During playback pause, select [◀▌▌] / [▌▌▶].	◀▌▌ ▌▌▶
Skip to the beginning of the current clip	Select [▌◀◀].	—
Skip to the beginning of the previous clip	Select [▌◀◀] twice (double tap).	—
Skip to the beginning of the next clip	Select [▶▶▌].	—
Pause/resume playback	During playback, select [▌▌] to pause. During playback pause, select to [▶] to resume normal playback.	▌▌ ▶
Stop playback	Select [■] to stop playback and return to the index screen.	—

* There is no audio during this playback mode.

Photo playback controls

Playback type	Operation
Return to the photo index screen	Select [▦].
Photo jump	Select [⌂] to display the scroll bar. Select [◀] / [▶], or drag your finger along the scroll bar, to find the desired photo. Select [↩] to return to single photo view.

ⓘ NOTES

- During fast/slow playback, you may notice some anomalies (blocky video artifacts, banding, etc.) in the playback picture.
- The speed indicated on the screen is approximate.
- Slow reverse playback will look the same as continuous frame reverse.

Adjusting the Volume

During playback, audio will be output from the monaural built-in speaker. You can connect headphones to the 🎧 (headphone) terminal to listen to the audio in stereo.

1 During playback, touch the screen to display the playback controls.

2 Select [🎧/🔈].

3 Select [🔈]/[🎧)] or [🔈))]/[🎧))] to adjust the volume and then select [↩].

- You can also drag your finger along the respective volume bar.

ⓘ NOTES

- You can select the audio channels output from the 🎧 (headphone) terminal and built-in speaker (📖 110).

Displaying Clip Information

1 In the clip index screen select [ℹ] and then select the desired clip.

- The [Clip Info] screen will be displayed.
- Select [◀] / [▶] to view the information for the previous/next clip.

2 Select [↩] twice to return to the index screen.

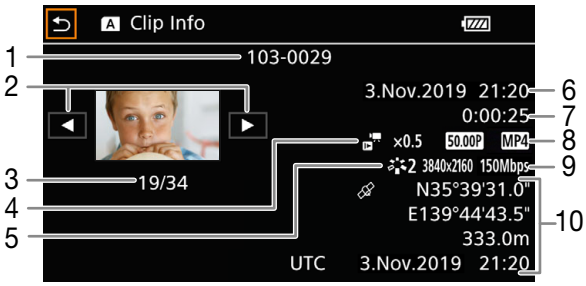

1 File number (MP4 clips, 📖 119)
Clip's file name (XF-AVC clips, 📖 39)
2 Display the information for the previous/next clip
3 Clip number / Total number of clips
4 Slow & fast motion rate (📖 46)
5 Look (📖 73)
6 Date and time at the start of recording
7 Clip duration
8 Frame rate (📖 44) and video format (📖 44)
9 Resolution and bit rate (📖 44)
10 GPS information* (📖 90)
(location at the start of recording)

* Only when the optional GP-E2 GPS receiver was used when recording the clip.

Clip and Photo Operations

Deleting Clips and Photos

You can delete clips and photos you are not interested in keeping.

Operating modes: CAMERA MEDIA | AUTO M | MP4 XF-AVC

Deleting Clips and Photos from the Index Screen

1 Open the desired index screen (📖 97).
- To delete all the MP4 clips or photos recorded on the same date (saved in the same folder), drag your finger left/right until an MP4 clip or photo you want to delete appears.

2 Select [Delete].
[FUNC] ➤ [Delete]

3 Select the desired option and then select [Yes].
- When you select [Select], perform the following procedure to select the individual recordings you want to delete before selecting [Yes].
- Select [Stop] to interrupt the operation while it is in progress. Some recordings may be deleted nevertheless.

4 When the confirmation message appears, select [OK].

To select individual recordings

1 Select the individual clips/photos you want to delete.
- A checkmark ✓ will appear on the recordings you select. The total number of selected clips/photos will appear next to the ☑ icon.
- Select a selected clip or photo to remove the checkmark. To remove all checkmarks at once, select [Remove All] ➤ [Yes].

2 After selecting all the desired recordings, select [OK].

Options

<folder name>: Deletes all the MP4 clips or photos recorded on a particular date. The last 4 digits of the folder name in the button indicate the recording date (1103 = November 3).

[Select]: You can select the individual clips or photos you want to delete.

[All Clips], [All Photos]: Deletes all the clips or photos.

Deleting a Single Clip

1 Play back the desired clip (📖 98).

2 Touch the screen to display the playback controls and then delete the clip.
[❚❚] ➤ [FUNC] ➤ [Delete] ➤ [Yes]

3 When the confirmation message appears, select [OK].

Deleting a Single Photo

1 Play back the desired photo (📖 98).

2 Touch the screen to display the playback controls and then delete the photo.
[FUNC] ➤ [Delete] ➤ [🗑 Proceed] ➤ [Yes]

3 Drag your finger left/right to select another photo to delete or select [✕].

IMPORTANT

- **Be careful when deleting recordings. Once deleted, they cannot be recovered.**
- Save copies of important recordings before deleting them (📖 113).

NOTES

- Photos that were protected with other devices cannot be deleted with this camcorder.
- To delete all recordings and make all recordable space available again you may prefer to initialize the card (📖 33).

Trimming MP4 Clips

You can trim MP4 clips by removing everything up to a certain point or everything after a certain point.

Operating modes: CAMERA MEDIA | AUTO M | MP4 XF-AVC

1 Play back the desired clip (📖 98).

2 Touch the screen to display the playback controls and then open the trimming screen.
[❚❚] ➤ [FUNC] ➤ [Trim]

3 Bring the clip to a precise point, if necessary.
- The point at which the clip will be trimmed is indicated by the ⍑ marker.
- Playback controls will appear on the screen (📖 99). Use any special playback modes as necessary to locate the desired point.

4 Select the desired trimming options and trim the clip.
[Trim] ➤ [Trim Before Marker] or [Trim After Marker] ➤ [Save as New] or [Overwrite]
- With the first set of options you can select, respectively, to trim before or after the ⍑ mark.
With the second set of options you can select, respectively, to save the trimmed clip as a new clip or to overwrite the existing clip.
- If you selected [Save as New], you can select [Stop] and then [OK] to interrupt the operation while it is in progress.

NOTES

- In the index screen, clips trimmed with the [Trim Before Marker] option appear with a special playback icon instead of the usual thumbnail.
- In the trimming screen, the frame reverse/advance button will jump in 1-frame intervals. The positions where trimming is possible are 1 GOP (approx. 0.5 second) apart.
- The clip is trimmed at the start/end of the GOP that includes the frame indicated with the marker.

Copying Clips and Photos

You can copy clips and photos from one card to the other.

Operating modes: CAMERA MEDIA | AUTO M | MP4 XF-AVC

Copying Clips and Photos from the Index Screen

1 Open the desired index screen (📖 97).
- To copy all the MP4 clips or photos recorded on the same date (saved in the same folder), drag your finger left/right until an MP4 clip or photo you want to copy appears.

2 Select [Copy (A ➔ B)] or [Copy (B ➔ A)].
[FUNC] ➤ [Copy (A ➔ B)] or [Copy (B ➔ A)]

3 Select the desired option and then select [Yes].
- When you select [Select], perform the following procedure to select the individual recordings you want to copy before selecting [Yes].
- Select [Stop] to interrupt the operation while it is in progress.

4 When the confirmation message appears, select [OK].

To select individual recordings

1 Select the individual clips/photos you want to copy.
- A checkmark ✓ will appear on the recordings you select. The total number of selected clips/photos will appear next to the ☑ icon.
- Select a selected clip or photo to remove the checkmark. To remove all checkmarks at once, select [Remove All] ➤ [Yes].

2 After selecting all the desired recordings, select [OK].

Options

<folder name>: Copies all the MP4 clips or photos recorded on a particular date. The last 4 digits of the folder name in the button indicate the recording date (1103 = November 3).

[Select]: You can select the individual clips or photos you want to copy.

[All Clips], [All Photos]: Copies all the clips or photos.

Copying a Single Photo

1 Play back the desired photo (📖 98).

2 Touch the screen to display the playback controls and then copy the photo.
[FUNC] ➤ [Copy (A ➔ B)] or [Copy (B ➔ A)] ➤ [Proceed] ➤ [Yes]

3 Drag your finger left/right to select another photo to copy or select [✕].

NOTES
- In the following cases, you will not be able to copy recordings:
  - If the card compartment cover is open.
  - If the LOCK switch on the destination card is set to prevent writing.
  - If a file number (📖 119) cannot be created because the number of folders and files on the destination card has reached its maximum.
- If there is not enough space on the destination card, as many photos as possible will be copied before stopping the operation.
- Video stream files over 4 GB in size cannot be copied onto SDHC cards.

Video Output Configuration

The video signal output from the SDI OUT terminal (XA55 only) and HDMI™ OUT terminal depends on the clip's video configuration and on various menu settings. The video signal output from the HDMI OUT terminal can also change depending on the capabilities of the connected monitor.
XA55 The camcorder cannot output signals to the SDI OUT terminal and HDMI OUT terminal simultaneously.

Operating modes: CAMERA MEDIA | AUTO M | MP4 XF-AVC

Video Output Configuration (Recording)

Recording video configuration		Scan mode[1]	Maximum output resolution[2]	Video output configuration		
Resolution	Frame rate			Resolution	Frame rate	Color sampling
3840x2160	25.00P	P	1920x1080	1920x1080	Same as the recording	YCbCr 4:2:2 8 bit
			1280x720 (50.00P)	1280x720	50.00P	
		PsF	—	1920x1080	HDMI output: 50.00i XA55 SDI output: 25.00PsF/50.00i	
1920x1080	50.00P	P	1920x1080	1920x1080 720x576[3]	50.00P	YCbCr 4:2:2 10 bit
			1280x720 (50.00P)	1280x720		
		PsF	—	1920x1080	50.00i	
	25.00P	P	1920x1080	1920x1080	Same as the recording	
			1280x720 (50.00P)	1280x720	50.00P	
		PsF	—	1920x1080	HDMI output: 50.00i XA55 SDI output: 25.00PsF/50.00i	
	50.00i[4]	—	1920x1080	1920x1080	50.00i	
			1280x720 (50.00P)	1280x720	50.00P	

[1] MENU ➤ [Display Setup] ➤ [SDI/HDMI Scan Mode] (XA55) or [HDMI Scan Mode] (XA50).
[2] HDMI output: MENU ➤ [Display Setup] ➤ [HDMI Max Resolution],
XA55 SDI output: MENU ➤ [Display Setup] ➤ [SDI Output].
[3] HDMI output only. The output signal will change automatically depending on the capabilities of the external monitor.
[4] XF-AVC clips only.

Video Output Configuration (Playback)

Recording video configuration		Scan mode[1]	Maximum output resolution[2]	Video output configuration		
Resolution	Frame rate			Resolution	Frame rate	Color sampling
3840x2160	25.00P	P	3840x2160[3]	3840x2160[3]	Same as the recording[3]	YCbCr 4:2:2 8 bit[4]
			1920x1080	1920x1080	Same as the recording	
			1280x720 (50.00P)	1280x720	50.00P	
		PsF	—	1920x1080	HDMI output: 50.00i XA55 SDI output: 25.00PsF/50.00i	
1920x1080	50.00P 25.00P	P	3840x2160[3]	3840x2160[3]	Same as the recording[3]	
			1920x1080	1920x1080	Same as the recording	
			1280x720 (50.00P)	1280x720	50.00P	
		PsF	—	1920x1080	HDMI output: 50.00i XA55 SDI output: 25.00PsF/50.00i	
	50.00i[5]	—	3840x2160[3]	1920x1080[3]	50.00i[3]	
			1920x1080	1920x1080	50.00i	
			1280x720 (50.00P)	1280x720	50.00P	

[1] MENU ➤ [Display Setup] ➤ [SDI/HDMI Scan Mode] (XA55) or [HDMI Scan Mode] (XA50).
[2] HDMI output: MENU ➤ [Display Setup] ➤ [HDMI Max Resolution],
XA55 SDI output: MENU ➤ [Display Setup] ➤ [SDI Output].
[3] HDMI output only.
[4] YCbCr 4:2:0 video recorded on the card is output as a YCbCr 4:2:2 signal.
[5] XF-AVC clips only.

Connecting to an External Monitor

When you connect the camcorder to an external monitor (to monitor the recording or for playback), use the HDMI OUT terminal (XA50 only) or the terminal on the camcorder that matches the one you wish to use on the monitor (XA55 only). Then select the video signal output configuration.

Operating modes: CAMERA MEDIA | AUTO M | MP4 XF-AVC

Connection Diagram

We recommend that you power the camcorder from a power outlet using the compact power adapter.

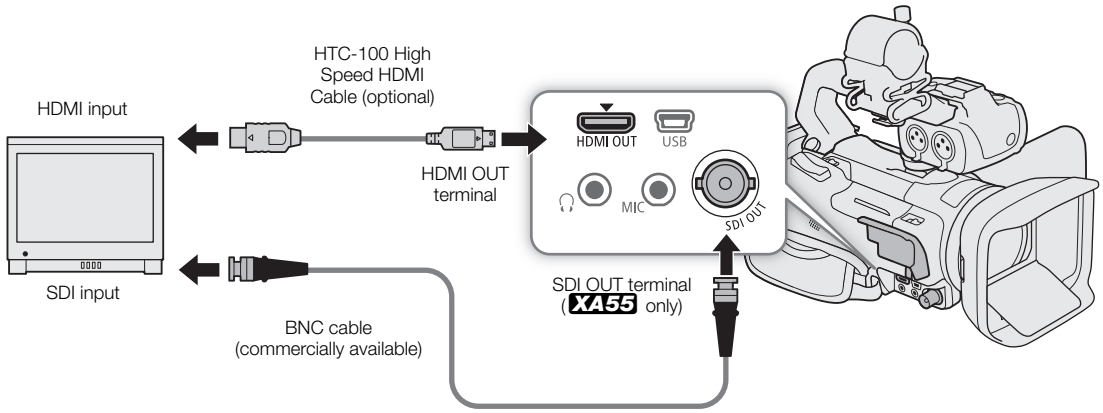

XA55 Using the SDI OUT Terminal

The digital signal that is output from the SDI OUT terminal includes the video signal, audio signal (up to 4 channels), time code signal and the recording command signal. You can also output the camcorder's onscreen displays (📖 120).

1 Select [Output Terminal].
MENU ➤ [1 Display Setup] ➤ [Output Terminal]

2 Select [SDI SDI] and then select [↩].

3 Select [SDI Output].
MENU ➤ [1 Display Setup] ➤ [SDI Output]

4 Select the desired option and then select [↩].

5 Select [3G-SDI Mapping].
MENU ➤ [1 Display Setup] ➤ [3G-SDI Mapping]

6 Select the desired option and then select [✕].

- You can select a video output signal compliant with Level A or Level B of the SMPTE ST 425-1 standard.

NOTES

- The camcorder cannot output signals to the SDI OUT terminal and HDMI OUT terminals simultaneously.
- The time code signal will not be output from the SDI OUT terminal when slow & fast motion recording is activated.
- You can set MENU ➤ [Recording Setup] ➤ [Rec Command] to [ON On] to use the camcorder's REC button to control also the recording operation of an external recorder compatible with recording commands connected to the SDI OUT terminal.

Using the HDMI OUT Terminal

The digital signal that is output from the HDMI OUT terminal includes the video signal and audio signal. You can output also the time code signal and the camcoder's onscreen displays (📖 120).
The audio output signal will be 2-channel linear PCM audio (16-bit, 48 kHz sampling). When recording or playing back clips recorded with 4-channel audio, you can select which audio channels to output (📖 110).

1 XA55 only: Select [Output Terminal].
MENU ➤ [1 Display Setup] ➤ [Output Terminal]

2 Select [HDMI HDMI] and then select [↩].

3 Select [HDMI Max Resolution].
MENU ➤ [1 Display Setup] ➤ [HDMI Max Resolution]

4 Select the desired option and then select [↩].

5 CAMERA mode only: To output the time code signal, select [HDMI Time Code].
MENU ➤ [3 Recording Setup] ➤ [HDMI Time Code]

6 Select [ON On] and then select [✕].

NOTES

- XA55 The camcorder cannot output signals to the SDI OUT terminal and HDMI OUT terminals simultaneously.
- The HDMI OUT terminal on the camcorder is for output only. Do not connect it to an HDMI output terminal on an external device, as this may damage the camcorder.
- Correct operation cannot be guaranteed when connecting the camcorder to DVI monitors.
- Video may not be output correctly depending on the monitor. XA55 In such case, try using the SDI OUT terminal.
- If the connected monitor is not compatible with the signal output from the camcorder, HDMI output will stop.
- You can set both MENU ➤ [Recording Setup] ➤ [Rec Command] and [HDMI Time Code] to [ON On] to use the camcorder's REC button to control also the recording operation of an external recorder compatible with HDMI recording commands connected to the HDMI OUT terminal. The camcorder's time code signal will be output as well.
- The time code signal will not be output from the HDMI OUT terminal in the following cases:
  - In MEDIA mode.
  - When the video output signal is 720x576 / 50.00P.
  - When slow & fast motion recording is activated.

Selecting the Video Output's Scan Mode

When using external devices that support only interlaced scanning, you can change the scan mode of the video signal output from the SDI OUT terminal (XA55 only) or HDMI OUT terminal.

1 Select [SDI/HDMI Scan Mode] or [HDMI Scan Mode].

MENU ➤ [1 Display Setup] ➤ [SDI/HDMI Scan Mode] (XA55) or [HDMI Scan Mode] (XA50)

2 Select the desired option and then select [✕].

Audio Output

The camcorder can output audio from the SDI OUT terminal (XA55 only), HDMI OUT terminal, 🎧 (headphone) terminal or built-in speaker (monaural audio; MEDIA mode only). When recording or playing back clips recorded with 4-channel audio, you can select which audio channels are output.

Audio output configuration

MP4 audio format[1]	Audio configuration of the recorded clips	Audio output configuration	
		XA55 SDI OUT terminal	HDMI OUT terminal[2]
[4CH LPCM 16bit 4CH]	4-channel linear PCM, 16 bit	4-channel linear PCM, 24 bit	2-channel linear PCM, 16 bit
[2CH AAC 16bit 2CH]	2-channel MPEG-2 AAC-LC, bit rate: 256 kbps		

[1] MENU ➤ [Recording Setup] ➤ [MP4 Audio Format].
[2] You can select the pair of audio channels that are output from the terminal.

Operating modes: CAMERA MEDIA | AUTO M | MP4 XF-AVC

Selecting the Audio Channels for Headphone or Speaker Output

You can select the audio channels that are output from the 🎧 (headphone) terminal or speaker.

1 Select [Monitor Channels].
MENU ➤ [♪)) 3 Audio Setup] ➤ [Monitor Channels]

2 Select the desired option and then select [✕].

Setting	Audio output	
	L	R
[CH1/2 CH1/CH2]	CH1	CH2
[CH1/1 CH1/CH1]	CH1	CH1
[CH2/2 CH2/CH2]	CH2	CH2
[CH1+2/1+2 CH1+2/CH1+2]	CH1+CH2 mixed	CH1+CH2 mixed
[CH3/4 CH3/CH4]*	CH3	CH4
[CH3/3 CH3/CH3]*	CH3	CH3
[CH4/4 CH4/CH4]*	CH4	CH4
[CH3+4/3+4 CH3+4/CH3+4]*	CH3+CH4 mixed	CH3+CH4 mixed
[CH1+3/2+4 CH1+3/CH2+4]*	CH1+CH3 mixed	CH2+CH4 mixed

* For MP4 clips: In CAMERA mode, these options are available only during 4-channel audio recording.

ⓘ NOTES

- If you set an assignable button to [CH/CH Monitor Channels] (📖 94), you can press the button to toggle between the audio channel output options.

Selecting the Audio Channels for HDMI Output

The audio signal output from the HDMI OUT terminal will be 2-channel linear PCM audio (16 bit). You can select the pair of audio channels that are output from the terminal.

1 Select [HDMI Channels].
   MENU ➤ [♪)) 3 Audio Setup] ➤ [HDMI Channels]
2 Select the desired option and then select [✕].

Working with Clips on a Computer

Saving MP4 Clips

Make sure to save clips recorded with this camcorder to a computer. To do so, you will need a card reader connected to a computer or a computer with an SD card slot. For details on transferring files from the SD card, refer to the computer's instruction manual or OS's help modules.
Under certain circumstances, clips may be split and recorded as separate files. Using MP4 Join Tool you can join the split files of and save them as a single seamless clip.

Transferring Files to a Computer

1 Insert an SD card with the desired clips into the SD card slot of the computer or card reader connected to the computer.
2 Follow the OS's onscreen instructions.
3 Copy the clips on the SD card to the computer.
- Recordings on the SD card are located in folders named "XXX_mmdd" under the "DCIM" folder, where XXX is the folder number (100 to 999) and mmdd stands for the recording date (📖 119).

Joining Clips Split by the Camcorder

Use MP4 Join Tool to join clips split by the camcorder in the following cases.
- When the camcorder switches to the other SD card while recording video due to the relay recording function (📖 34).
- The video (stream) file in the clip will be split approximately every 4 GB.

MP4 Join Tool is available as a free download (for Windows or macOS) from your local Canon website. Check the download page for the system requirements and latest information.
You will find detailed instructions about installing and uninstalling the software in the "Read This First" file (Install-MP4 Join Tool.pdf) included in the compressed file you download. For details about using the software, refer to the instruction manual (PDF file) that is installed with the software.

Saving XF-AVC Clips

Use Canon XF Utility to save and organize XF-AVC clips on a computer. You can use the Canon XF plugins to easily use clips directly from Avid non-linear editing (NLE) software. The software and plugins are available as free downloads from your local Canon website. Check the download page for the system requirements and latest information.
You will find detailed instructions about installing and uninstalling the software in the "Read This First" file (Install-XF Utility.pdf) included in the compressed file you will download from the website. For details about using the software, refer to the instruction manual (PDF file) that is installed with the software.

Canon XF Utility (for Windows/macOS): Software application that allows you to save clips on a computer, check, play back and organize clips and grab still frames from clips.

Canon XF Plugin for Avid Media Access (for Windows/macOS): Plugin that allows you to easily import clips from an SD card or a local folder in the computer to the compatible version of Avid Media Composer (an NLE application compatible with Avid Media Access), directly from within the application.

Menu Options

For details about how to select an item, refer to *Using the Menus* (📖 29). For details about each function, see the reference page. Setting options in boldface indicate default values. Depending on the camcorder's operating mode and other current settings, some menu items may not be available. Such menu items do not appear or appear grayed out in menu screens.

To skip directly to the page of a specific setup menu:

[Camera Setup] (📖 116) [Audio Setup] (📖 119)
[Playback Setup] (📖 118) [Display Setup] (📖 120)
[Recording Setup] (📖 118) [System Setup] (📖 121)

FUNC menu in CAMERA mode

Menu item	Setting options and additional information	
[IRIS Aperture]	Aperture value adjustment dial, F2.8 to F11; Zebra pattern button*: **[Off]**, [70 70%], [100 100%]	(📖 66)
[SHTR Shutter Speed]	Shutter speed adjustment dial,1/6 to 1/2000; Zebra pattern button*: **[Off]**, [70 70%], [100 100%]	(📖 66)
[GAIN Gain]	Gain value adjustment dial, 0.0 dB to 39.0 dB; Zebra pattern button*: **[Off]**, [70 70%], [100 100%]	(📖 65)
[GAIN AGC Limit]	[M] (set a limit): Turn on/off **(off)**; when [M] is selected: Gain limit adjustment dial, 0.0 dB to 38.0 dB	(📖 62)
[Exposure Comp.]	Touch exposure frame, [ ] (Touch exposure settings): **[N Normal]**, [H Highlights]; Zebra pattern button*: **[Off]**, [70 70%], [100 100%]; [✳] (AE lock): Turn on/off **(off)**	(📖 65)
[White Balance]*	**[AWB Automatic]**, [Daylight], [Tungsten], [K Color Temperature], [Set 1], [Set 2]	(📖 71)
[BLC Always On]*	**[Off]**, [On]	(📖 68)
[Focus]	Touch focus frame, **[A Automatic]**, [M Manual]; when [M] is selected: focus preset button; when focus preset is activated: [PRESET] (return to the preset focus position); [ ] (peaking settings): [Peaking and B&W], [Peaking Color], [PEAK] (peaking): Turn on/off **(off)**	(📖 47)
[MAGN. Magnification]	[OK]	(📖 50)
[ZOOM Zoom]	Onscreen zoom controls, [PHOTO] (take a photo), [REC]/[STOP] (record a clip); [ ]/[OFF] (tracking): Turn on/off **(off)**; [2.0x] (digital tele-converter): Turn on/off **(off)**	(📖 58)
[Looks]*	**[1 Standard]**, [2 Neutral], [3 Wide DR], [4 Monochrome]; [ ] (look settings): [Sharpness], [Contrast], [Color Depth]	(📖 73)
[Audio]	Audio levels for audio channels CH1 to CH4; **[A Automatic]**, [M Manual], when [M Manual] is selected: Audio level adjustment, 00 to 100 **(50)**	(📖 81)

* The button shows the icon of the current setting.

FUNC menu in MEDIA mode

Menu item	Setting options and additional information		
For clips:	[ ] index screen	Single clip (playback pause)	
[Copy (A ➔ B)], [Copy (B ➔ A)]	<folder name>**, [Select], [All Clips]	—	(📖 103)
[Delete]		●	(📖 101)
[Trim]	—	●	(📖 102)
For photos:	[ ] index screen	Single photo view	
[Copy (A ➔ B)], [Copy (B ➔ A)]	<folder name>, [Select], [All Photos]	●	(📖 103)
[Delete]		●	(📖 101)

** MP4 clips only.

Setup Menus

[Camera Setup] menu (CAMERA mode only)

Menu item	Setting options and additional information	
[Digital Zoom]	**[OFF Off]**, [300x 300x], [2.0x Digital Tele-conv.]	
	Determines the operation of the digital zoom. • Digital zoom is not available in AUTO mode or when [Camera Setup] ➔ [Conversion Lens] is set to [Wide WA-U58]. • When this setting is set to [300x 300x], the camcorder will automatically switch to digital zoom once you zoom beyond the optical zoom range. • With the digital zoom the image is digitally processed, so the image resolution will deteriorate the more you zoom in.	
[Zoom Speed Level]	[Fast], **[Normal]**, [Slow]	(📖 55)
[Grip Zoom Operation]	**[Enable Enable]**, [Disable Disable]	(📖 55)
[Grip Zoom Speed]	**[VAR] (variable speed)**, [CONST] (constant speed), when [CONST] is selected – Zoom speed adjustment bar: 1 to 16 **(8)**	(📖 56)
[Handle Zoom Operation]	**[Enable Enable]**, [Disable Disable]	(📖 57)
[Handle Zoom Speed]	Zoom speed adjustment bar: 1 to 16 **(8)**	(📖 57)
[Wireless Ctrlr Zoom Speed]	Zoom speed adjustment bar: 1 to 16 **(8)**	(📖 57)
[High-Speed Zoom]	**[ON On]**, [OFF Off]	(📖 56)
[AF Mode]	[BOOST AF-Boosted MF], **[CONT Continuous]**	(📖 51, 52)
[AF Frame Size]	**[A Automatic]**, [L Large], [S Small]	(📖 52)
[AF Speed]	[Fast], **[Normal]**, [Slow]	(📖 53)
[AF Response]	[Fast], **[Normal]**, [Slow]	(📖 53)
[Face Detection & Tracking]	**[ON On]**, [OFF Off]	(📖 53)
[Focus Guide]	**[ON On]**, [OFF Off]	(📖 49)
[Focus Preset Speed]	[Fast], **[Normal]**, [Slow]	(📖 48)
	Determines the speed at which the focus changes to the preset position.	
[Auto Backlight Correction]	**[ON On]**, [OFF Off]	(📖 68)

Menu item	Setting options and additional information
[Auto Slow Shutter]	**[ON On]**, [OFF Off] The camcorder automatically uses slow shutter speeds to obtain brighter recordings in places with insufficient lighting. • When this setting is set to [ON On], the fastest shutter speed used is: 1/25 (50.00P) or 1/12 (25.00P). • Auto slow shutter can be activated only during AUTO mode, when the shooting mode is set to **P** or when infrared recording is activated. • If a trailing afterimage appears, set the auto slow shutter to [OFF Off]. • Auto slow shutter is not available when the AGC limit is set.
[Flicker Reduction]	**[OFF Off]**, [A Automatic] When this setting is set to [A Automatic], the camcorder will automatically detect and reduce flicker. • When recording under light sources such as fluorescent, mercury or halogen lamps, the screen may flicker depending on the shutter speed. You may be able to avoid flicker by setting the shutter speed mode to a value matching the frequency of the local electrical system: 1/100 for 50 Hz systems, 1/60 for 60 Hz systems.
[Conversion Lens]	[Tele TL-U58], [Wide WA-U58], **[OFF Off]** When you attach to the camcorder the optional TL-U58 Tele-converter or WA-U58 Wide Attachment, set the appropriate conversion lens setting. The image stabilization method and minimum focusing distance will change according to the accessory used. The minimum focusing distance throughout the entire zoom range will be 130 cm for the tele-converter and about 60 cm for the wide attachment. • The tele-converter increases the focal length of the lens by a factor of approx. 1.5. The wide attachment reduces the focal length of the lens by a factor of approx. 0.8. • The approximate focusing distance displayed on the screen will change depending on the setting. Select [OFF Off] when a conversion lens is not attached to the camcorder. • When a setting other than [OFF Off] is selected, [Camera Setup] ➤ [AF Mode] will not be available.
[Image Stabilizer]	[OFF Off], **[Standard]**, [Dynamic] (📖 60)
[Powered IS Button]	**[ON Press and Hold]**, [ON/OFF Toggle On/Off] Determines the operation mode of the POWERED IS button (📖 60). [ON Press and Hold]: Powered IS will be activated while you hold the button pressed down. [ON/OFF Toggle On/Off]: Each press of the button will turn the Powered IS function on and off.
[Set WB Priority]	**[AWB Automatic]**, [Daylight], [Tungsten], [K Color Temperature], [Set 1], [Set 2] This setting is convenient when you need to use a particular white balance setting frequently. You can press an assignable button set to [WB WB Priority] to switch between the current white balance and the white balance setting selected for [Set WB Priority].
[Focus/Zoom Ring Operation]	**[Enable Enable]**, [Disable Disable] Selects whether to enable or disable the focus/zoom ring's operation.
[Focus Ring Direction]	**[NORM Normal]**, [REV Reverse] Changes the direction the focus/zoom ring needs to be turned when using it to adjust the focus (when the focus/zoom ring switch is set to FOCUS).
[Focus Ring Response]	[Fast], **[Normal]**, [Slow] Selects the sensitivity of the response when operating the focus/zoom ring to adjust the focus (when the focus/zoom ring switch is set to FOCUS).
[Zoom Ring Direction]	**[NORM Normal]**, [REV Reverse] Changes the direction the focus/zoom ring needs to be turned when using it to adjust the zoom (when the focus/zoom ring switch is set to ZOOM).
[IR Light]	[ON On], **[OFF Off]** (📖 88)
[IR Rec Color]	**[WHITE White]**, [GREEN Green] (📖 88)

[▶ Playback Setup] menu (MEDIA mode only)

Menu item	Setting options and additional information
[MP4 Data Code]	[OFF Off], **[Date]**
[XF-AVC Data Code] [Data Code]	[OFF Off], [Date], [Time], **[Date and Time]**, [Camera Data] (XF-AVC clips) or [Camera Data] (photos)
	Displays the date when an MP4 clip was recorded ([MP4 Data Code]) or the date and/or time or camera settings used when an XF-AVC clip ([XF-AVC Data Code]) or a photo ([Data Code]) was recorded.

[Recording Setup] menu

Menu item	Setting options and additional information	
[Movie Format]	**[MP4 MP4]**, [XF-AVC XF-AVC]	(📖 44)
[MP4 Resolution]	**[3840x2160 (150 Mbps)]**, [1920x1080 (35 Mbps)], [1920x1080 (17 Mbps)], [1280x720 (8 Mbps)]	(📖 44)
[XF-AVC Resolution]	**[3840x2160 (160 Mbps)]**, [1920x1080 (45 Mbps)]	(📖 44)
[MP4 Frame Rate]	[50.00P 50.00P], **[25.00P 25.00P]**	(📖 44)
[XF-AVC Frame Rate]	[50.00P 50.00P], [50.00i 50.00i], **[25.00P 25.00P]**	(📖 44)
[MP4 Audio Format]	**[2CH AAC 16bit 2CH]**, [4CH LPCM 16bit 4CH]	(📖 77)
[Recording Media]	[Rec Media for Movies]: **[A Mem. Card A]**, [B Mem. Card B] [Rec Media for Photos]: **[A Mem. Card A]**, [B Mem. Card B]	(📖 34)
[Dual/Relay Recording]	**[Standard Recording]**, [Dual Recording], [A→ Relay Recording] (or [B→ Relay Recording])	(📖 34)
[Slow & Fast Motion]	[OFF Off], [x0.5], [x2], [x4], [x10], [x20], [x60], [x120], [x600], [x1200]	(📖 46)
[Available Space in Memory], [Used Space in Memory]	[A] (SD card A), [B] (SD card B)	
	Displays a screen where you can check the SD card's total space and speed class as well as the following information: CAMERA mode only: Available space and estimates for remaining recording time (MP4 clips/XF-AVC clips) and remaining number of photos. Estimates are based on current settings. MEDIA mode only: Amount of space in use.	
[Initialize SD]	[A Mem. Card A], [B Mem. Card B]	(📖 33)
[Rec Command]	[ON On], **[OFF Off]**	
	When this setting is set to [ON On], you can use the camcorder's REC button to control also the recording operation of a compatible external recorder connected to the SDI OUT terminal (XA55 only) or HDMI OUT terminal.	
[HDMI Time Code]	[ON On], **[OFF Off]**	(📖 108)
	When this setting is set to [ON On], the HDMI signal output from the camcorder (only in CAMERA mode) includes the camcorder's time code.	
[Time Code Mode]	**[PRESET Preset]**, [REGEN. Regen.]	(📖 74)
[Time Code Running Mode]	**[RECRUN Rec Run]**, [FREE RUN Free Run]	(📖 74)
[Initial Time Code]	Time code input screen (**00:00:00:00** to 23:59:59:24)	(📖 74)
[User Bit Type]	**[SET Setting]**, [TIME Time], [DATE Date]; [ ] (user bit input): 8 hexadecimal characters (**00 00 00 00**)	(📖 76)
[Camera Index]	**[A]** to [Z]	(📖 39)
[Reel Number], [Clip Number]	**[001]** to [999]	(📖 40)
[Clip Numbering]	**[Reset]**, [Continuous]	(📖 40)
[User Defined]	Up to 5 characters, A to Z, 0 to 9 (**[CANON]**)	(📖 40)

Menu item	Setting options and additional information	
[Color Bars]	**[OFF Off]**, [EBU EBU], [SMPTE SMPTE]	(📖 86)
[1 kHz Tone]	[-12dB –12 dB], [-18dB –18 dB], [-20dB –20 dB], **[OFF Off]**	(📖 86)
[MP4 Clip / Photo Numbering]	[Reset], **[Continuous]** MP4 clips and photos are saved as files in folders. You can select the numbering method for those files. File numbers appear on screens in playback mode in a format such as "101-0107". The first 3 digits indicate the folder number and the last 4 digits are different for each file in a folder. [Reset]: MP4 clip/photo numbers will restart from 100-0001 every time you insert a new (or initialized) card. If the card already contains previous recordings, numbers will continue from the number following that of the last MP4 clip or photo on the card. [Continuous]: MP4 clip/photo numbers will continue from the number following that of the last MP4 clip or photo recorded with the camcorder. This setting is the most convenient for managing files on a computer. We recommend using the [Continuous] setting. Understanding folder names • An example folder name is “101_1103”. The first 3 digits indicate the folder number (from 100 to 999) and the last 4 digits indicate the month and day when the folder was created. In the example, the folder numbered 101 was created on November 3. • Each folder can contain up to 500 files (MP4 clips and photos combined). When that number is exceeded, a new folder is created automatically. Understanding file numbers • An example file number is “101-0107”. The first 3 digits indicate the folder number where the MP4 clip or photo is stored and the last 4 digits indicate the consecutive number assigned to the recording (from 0001 to 9999). • The file number also indicates the name and location of the file on the card. For example, an MP4 clip numbered 101-0107 that was recorded on November 3, is located in the “DCIM**101**_1103” folder as the file "MVI_**0107**.MP4"; a photo with the same file number will be saved in the same folder as the file "IMG_**0107**.JPG".	

[♪)) Audio Setup] menu

Menu item	Setting options and additional information	
[CH2 Input]	**[INPUT2 INPUT 2]**, [INPUT1 INPUT 1]	(📖 80)
[CH3/CH4 Input]	[INPUT INPUT Terminal], **[INT/MIC Built-in Mic/MIC Terminal]**	(📖 80)
[INPUT 1 Mic Trimming], [INPUT 2 Mic Trimming]	[+12dB +12 dB], [+6dB +6 dB], **[0dB 0 dB]**, [-6dB –6 dB], [-12dB –12 dB]	(📖 83)
[INPUT 1 Mic Att.], [INPUT 2 Mic Att.]	[ON On], **[OFF Off]**	(📖 83)
[INPUT 1/2 Limiter]	[ON On], **[OFF Off]**	(📖 83)
[INPUT 1/2 ALC Link]	[LINK Linked], **[SEP. Separated]**	(📖 81)
[Built-in Mic Sensitivity]	**[NORM Normal]**, [HIGH High]	(📖 83)
[Built-in Mic Att.]	[ON On], **[OFF Off]**	(📖 83)
[Built-in Mic Low Cut]	[ON On], **[OFF Off]**	(📖 84)
[MIC Att.]	[ON On], **[OFF Off]**	(📖 84)
[MIC Low Cut]	[ON On], **[OFF Off]**	(📖 84)
[MIC ALC Link]	**[LINK Linked]**, [SEP. Separated]	(📖 81)
[MIC Power]	**[ON On]**, [MIC OFF Off]	(📖 84)
[Headphone Volume]	Volume adjustment bar: 0 to 15 **(8)**, [🎧)] (softer), [🎧))] (louder)	(📖 85)
[Speaker Volume]	Volume adjustment bar: 0 to 15 **(8)**, [🔈] (softer), [🔈)] (louder) In MEDIA mode only, this setting is an alternative way to adjust the built-in speaker's volume (📖 99).	

Menu item	Setting options and additional information
[Monitor Channels]	**[CH1/2 CH1/CH2]**, [CH1/1 CH1/CH1], [CH2/2 CH2/CH2], [CH1+2/1+2 CH1+2/CH1+2], [CH3/4 CH3/CH4], [CH3/3 CH3/CH3], [CH4/4 CH4/CH4], [CH3+4/3+4 CH3+4/CH3+4], [CH1+3/2+4 CH1+3/CH2+4] (📖 110)
[HDMI Channels]	**[CH1/2 CH1/CH2]**, [CH3/4 CH3/CH4] (📖 111)
[Notification Sounds]	[High Volume], [Low Volume], **[OFF Off]** A beep will accompany some of the camcorder's operations. • While pre-recording is activated, the camcorder will not emit any notification sounds.

[Display Setup] menu

Menu item	Setting options and additional information
XA55 [Output Terminal]	[SDI SDI], **[HDMI HDMI]** (📖 107, 108)
[HDMI Max Resolution]	[3840x2160]*, **[1920x1080]**, [1280x720(50.00P)] (📖 108) * Available only in MEDIA mode.
XA55 [SDI Output]	**[1920x1080]**, [1280x720(50.00P)] (📖 107)
XA55 [3G-SDI Mapping]	[Level A Level A], **[Level B Level B]** (📖 107)
XA55 [SDI/HDMI Scan Mode] XA50 [HDMI Scan Mode]	**[P P]**, [PsF PsF (Forced 1080i)] (📖 109)
[Output Status]	— Displays a screen where you can check the configuration (video and audio) of the output signal.
[LCD Brightness]	Brightness adjustment bar, [☀] (darker), [☀] (brighter) • Changing the brightness of the screen does not affect the brightness of your recordings or the brightness of the playback image on a TV.
[LCD Backlight]	[Bright], **[Normal]**, [Dim]
[Viewfinder Backlight]	[Bright], **[Normal]** Changes the screen's backlight level to one of three levels (LCD screen) or two levels (viewfinder), affecting the general brightness of the screen. • Changing the brightness of the screen does not affect the brightness of your recordings or the brightness of the playback image on a TV.
[LCD Mirror Image]	[ON On], **[OFF Off]** When this setting is set to [ON On], this function reverses the image on the screen horizontally when you rotate the LCD panel 180 degrees toward the subject. In other words, the screen will show a mirror image of the subject. • If the camcorder is operated (touch screen, physical buttons and switches, or remote operation) while the mirror image is displayed, the normal image will be displayed temporarily. After about 4 seconds, the mirror image is displayed again.
[Output Onscreen Displays]	[ON On], **[OFF Off]** When this setting is set to [ON On], the camcorder's onscreen displays will appear also on the screen of a TV or monitor connected to the camcorder.
[Onscreen Markers]	**[OFF Off]**, [Level (Gray)], [Level (White)], [Grid (Gray)], [Grid (White)] You can display a grid or a horizontal line at the center of the screen. Use the markers as a reference to make sure your subject is framed correctly (vertically and/or horizontally). • Using the onscreen markers will not affect the recordings.
[Distance Units]	**[m meters]**, [ft feet] Selects the units to use for the focusing distance display while focusing manually. This setting also affects units for the altitude in the GPS information of geotagged recordings.

[System Setup] menu

Menu item	Setting options and additional information	
[Language]	[Česky], [Dansk], [Deutsch], [Ελληνικά], **[English]**, [Español], [Français], [Italiano], [Magyar], [Melayu], [Nederlands], [Norsk], [Polski], [Português], [Română], [Suomi], [Svenska], [Türkçe], [Русский], [Українська], [العربية], [فارسى], [ภาษาไทย], [简体中文], [繁體中文], [한국어], [日本語]	(28)
[Time Zone/DST]	[] (home time zone), [] (travel time zone); For each: list of world time zones (**[Paris]**), [] (DST adjustment): turn on or off **(off)**	(28)
[Date/Time]	Date and time adjustment fields; [Date Format]: [Y.M.D], [M.D,Y], **[D.M.Y]**; [24H]: turn on (24-hour clock) or off (12-hour clock) **(off)**	(27)
	In [Date Format] options, Y=year, M=month, D=day.	
[Wireless Remote Control]	**[ON On]**, [OFF Off]	
	Allows the camcorder to be operated with the supplied wireless controller.	
[POWER LED], [Tally Lamp], [ACCESS LED]	**[ON On]**, [OFF Off]	
	These settings determine whether the following LEDs and indicators will illuminate. [POWER LED]: The green POWER/CHG indicator (only when it serves as power indicator). [Tally Lamp]: When this setting is set to [ON On], the tally lamp illuminates while the camcorder is recording, the wireless controller is operated, the remaining battery charge is too low or a card is full. The tally lamp is located on the handle unit so make sure you attach it to the camcorder in advance. [ACCESS LED]: The ACCESS indicator when the camcorder is accessing an SD card.	
[REMOTE Terminal]	[RC-V100 RC-V100 (REMOTE A)], **[Std. Standard]**	(89)
[Assignable Button 1] to [Assignable Button 5]	Following are the default settings for each assignable button. For a complete list of the functions that can be assigned, refer to the detailed table. 1: **[AF/MF AF/MF]**, 2: **[Powered IS]**, 3: **[Pre REC]**, 4: **[REC REVIEW Rec Review]**, 5: **[MAGN. Magnification]**	(94)
[Onscreen Assignable Button]	For a complete list of the functions that can be assigned, refer to the detailed table (default: **[PHOTO Photo]**).	(94)
[CUSTOM Dial & Button]	[Tv/Av/M Tv / Av / M], [GAIN AGC Limit], [Exposure Comp.], **[OFF Off]**	(93)
[Battery Info]	—	
	Displays a screen where you can verify the battery charge (as a percentage) and the remaining recording time (CAMERA mode) or playback time (MEDIA mode). • If the battery pack is depleted, the battery information may not be displayed.	
[Backup Menu Settings B]	[Save], [Load]	(96)
[GPS Auto Time Setting]*	[ON Auto Update], **[OFF Disable]**	(90)
[GPS Information Display]*	—	
	When the optional GP-E2 GPS Receiver is attached to the camcorder, the following settings become available: [GPS Auto Time Setting]: You can have the camcorder automatically set the time based on the information acquired from GPS. For more details, refer to *Setting Time from GPS on the Camera* in the receiver's instruction manual. [GPS Information Display]: Displays the current GPS information. For more details, refer to *Viewing GPS Information* in the receiver's instruction manual.	
[Certification Information]	—	
	Displays certification logos that apply to this camcorder.	
[Firmware]	—	
	Displays the current firmware version of the camcorder. • This option is usually unavailable.	

Menu item	Setting options and additional information
[Reset All]	[No], [Yes]
	Resets all the camcorder's settings to default values/settings.

* Option available only when the optional GP-E2 GPS Receiver is attached to the camcorder.

Troubleshooting

If you have a problem with your camcorder, refer to this section. Consult your dealer or a Canon Service Center if the problem persists.

Power Source

The camcorder will not turn on or it turns off by itself.
- The battery pack is depleted. Replace or charge the battery pack.
- Remove the battery pack and reattach it correctly.

Cannot charge the battery pack.
- Make sure the camcorder is off so charging can start.
- The temperature of the battery pack is outside the charging range (approximately 0 – 40 °C). Remove the battery pack, warm it or let it cool down, as necessary, and try charging it again.
- Charge the battery pack in temperatures between approximately 0 °C and 40 °C.
- The battery pack is faulty. Replace the battery pack.
- The camcorder cannot communicate with the battery pack attached. Battery packs not recommended by Canon for use with this camcorder cannot be charged using this camcorder.
- If you are using a battery pack recommended by Canon for use with this camcorder, there may be a problem with the camcorder or battery pack. Consult a Canon Service Center.

A noise can be heard from the compact power adapter.
- A faint sound can be heard while the compact power adapter is connected to a power outlet. This is not a malfunction.

The battery pack is depleted extremely quickly even at normal temperatures.
- The battery may have reached the end of its battery life. Buy a new battery pack.

Recording

Pressing the REC button will not start recording.
- You cannot record while the camcorder is writing previous recordings to a card (while the ACCESS indicator is illuminated in red). Wait until the camcorder has finished.
- The card is full. Delete some recordings (📖 101) or initialize the card (📖 33) to free some space.
- File numbers for MP4 clips and photos have reached their maximum value. Set MENU ➤ [Recording Setup] ➤ [MP4 Clip / Photo Numbering] to [Reset] and insert a new (or just initialized) card.
- The lock lever on the handle is set to 🔒, rendering the handle's REC button inoperable. Change the position of the lock lever.

The point where the REC button was pressed does not match the beginning/end of the recording.
- There may be a slight interval between pressing the REC button and the actual start/end of recording. This is not a malfunction.

Operating the grip zoom rocker has no effect.
- The grip zoom rocker is deactivated. Set MENU ➤ [Camera Setup] ➤ [Grip Zoom Operation] to [Enable].

Operating the handle zoom rocker has no effect.
- The handle zoom rocker is deactivated. Set MENU ➤ [Camera Setup] ➤ [Handle Zoom Operation] to [Enable].

Operating the focus/zoom ring has no effect.
- The focus/zoom ring is deactivated. Set MENU ➤ [Camera Setup] ➤ [Focus/Zoom Ring Operation] to [Enable].

The camcorder will not focus.
- The camcorder may not be able to focus on certain subjects using autofocus. Focus manually (📖 47).
- When the AF mode is set to AF-boosted MF, start focusing manually until the AF frame changes to white (automatic adjustment range).
- The viewfinder is not adjusted. Use the dioptric adjustment lever to make the proper adjustment (📖 22).
- The lens is dirty. Clean the lens with a soft lens-cleaning cloth.

When a subject flits across in front of the lens, the image appears slightly bent.
- This is a phenomenon typical of CMOS image sensors. When a subject crosses very quickly in front of the camcorder, the image may seem slightly warped. This is not a malfunction.

Changing the operating mode between recording (●)/record standby (■)/playback (▶) takes longer than usual.
- When the SD card contains a large number of clips, some operations may take longer than usual. Save your recordings (📖 113) and initialize the card (📖 33). Alternatively, replace the card.

Clips or photos cannot be recorded properly.
- This may occur as clips and photos are recorded/deleted over time. Save your recordings (📖 113) and initialize the card (📖 33).

After using the camcorder for a long time, it becomes hot.
- The camcorder may become hot after using it continuously for long periods of time; this is not a malfunction. If the camcorder becomes unusually hot or it becomes hot after using it only for a short while, it may indicate a problem with the camcorder. Consult a Canon Service Center.

Playback

Cannot delete clips/photos
- The LOCK switch on the SD card is set to prevent accidental erasure. Change the position of the LOCK switch.
- Photos that were protected using other devices cannot be deleted with this camcorder.
- You may not be able to delete clips recorded or edited using another device.

Deleting clips takes longer than usual.
- When the SD card contains a large number of clips, some operations may take longer than usual. Save your recordings (📖 113) and initialize the card (📖 33).

Cannot copy clips/photos
- You may not be able to copy clips/photos recorded or edited using another device and then transferred to a card connected to the computer.
- There is not enough available space on the destination card or it already contains the maximum number of XF-AVC clips (999 clips). Delete some XF-AVC clips (📖 101) to free some space or replace the card.

Cannot mark individual clips/photos in the index screen with a checkmark ✓
- You cannot select more than 100 clips/photos individually. Select the [All Clips] or [All Photos] option instead of [Select].

Indicators and Onscreen Displays

appears in red on the screen.
- Battery pack is depleted. Replace or charge the battery pack.

appears on the screen.
- The camcorder cannot communicate with the battery pack attached so the remaining battery time cannot be displayed.

The tally lamp does not illuminate.
- Set MENU ➤ [System Setup] ➤ [Tally Lamp] to [On].

The tally lamp flashes quickly. (4 flashes per second)
- The battery pack is depleted. Replace or charge the battery pack.
- There is not enough available space on the card. Delete some recordings (📖 101) to free some space or replace the card.

A / B (in red) and [End] appear on the screen.
- The SD card is full. Delete some recordings (📖 101) to free some space or replace the card.

A / B appears in red on the screen.
- A card error occurred. Turn off the camcorder. Remove and reinsert the card. Initialize the card if the display does not change back to normal.

Even after stopping recording, the ACCESS indicator stays illuminated in red.
- The clip is being recorded on the card. This is not a malfunction.

The red POWER/CHG indicator flashes rapidly (one flash at 0.5-second intervals).
- The temperature of the battery pack is outside the charging range (approximately 0 – 40 °C). Remove the battery pack, warm it or let it cool down, as necessary, and try charging it again.
- Charge the battery pack in temperatures between approximately 0 °C and 40 °C.
- The battery pack is damaged. Use a different battery pack.
- Charging has stopped because the compact power adapter or the battery pack is faulty. Consult a Canon Service Center.

⭠ flashes on the screen.
- You connected the optional GP-E2 GPS Receiver to the camcorder in MEDIA mode. Disconnect the receiver and connect it again after setting the camcorder to CAMERA mode.

Picture and Sound

The screen appears too dark.
- Adjust the brightness with the MENU ➤ [Display Setup] ➤ [LCD Brightness] or [LCD Backlight] setting.

Screen displays turn on and off repeatedly.
- The battery pack is depleted. Replace or charge the battery pack.
- Remove the battery pack and reattach it correctly.

Abnormal characters appear on the screen and the camcorder does not operate properly.
- Disconnect the power source and reconnect it after a short time.

Video noise appears on screen.
- Keep a distance between the camcorder and devices that emit strong electromagnetic fields such as near powerful magnets and motors, MRI machines or high-voltage power lines.

Horizontal bands appear on the screen.
- This is a phenomenon typical of CMOS image sensors when recording under some types of fluorescent, mercury or sodium lamps. This is not a malfunction. You may be able to reduce the symptoms by setting MENU ➤ [Camera Setup] ➤ [Flicker Reduction] to [Automatic] or by setting the shutter speed to a value matching the frequency of the local electrical system (1/100 for 50 Hz systems, 1/60 for 60 Hz systems).

Viewfinder picture is blurred.
- Adjust the viewfinder with the dioptric adjustment lever (📖 22).

No picture appears on the viewfinder.
- Close the LCD panel and then pull out the viewfinder to activate it.

Audio is not recorded.
- The AUDIO IN switch of the INPUT terminal is not set to the correct position.
- The external microphone connected to the INPUT 1/INPUT 2 terminal requires phantom power. Set the corresponding switch (INPUT 1/INPUT 2) to MIC+48V (📖 79).
- The external microphone connected to the MIC terminal is not turned on or its battery is depleted. Alternatively, an external microphone compatible with plug-in power is connected to the MIC terminal but MENU ➤ [Audio Setup] ➤ [MIC Power] is set to [Off].
- The audio recording level is not set correctly (📖 81).

Sound is distorted or is recorded at lower levels.
- When recording near loud sounds (such as fireworks, shows or concerts), sound may become distorted or it may not be recorded at the actual levels. Activate the microphone attenuator (📖 83), or adjust the audio recording level manually.

The picture is displayed correctly but there is no sound from the built-in speaker.
- Speaker volume is turned off. Adjust the volume (📖 99).
- In MEDIA mode, the built-in speaker is muted when headphones are connected to the camcorder.

Cards and Accessories

Cannot insert the SD card.
- The card you are trying to insert is not facing the correct direction. Turn it over and insert it.

Cannot record on the SD card.
- A compatible card must be used (📖 32).
- Initialize the card (📖 33) when you use it with the camcorder for the first time.
- The LOCK switch on the SD card is set to prevent accidental erasure. Change the position of the LOCK switch.
- The card is full. Delete some recordings (📖 101) to free some space or replace the card.
- The folder and file numbers for MP4 clips and photos have reached their maximum value. Set MENU ➤ [Recording Setup] ➤ [MP4 Clip / Photo Numbering] to [Reset] and insert a new (or just initialized) card.
- The card already contains the maximum number of XF-AVC clips (999 clips). Delete some XF-AVC clips (📖 101) to free some space or replace the card.

The supplied wireless controller will not work.
- Set MENU ➤ [System Setup] ➤ [Wireless Remote Control] to [On].
- Replace the battery of the wireless controller.

The optional RC-V100 Remote Controller or commercially available remote control does not work.
- Make sure that MENU ➤ [System Setup] ➤ [REMOTE Terminal] is set to [RC-V100 (REMOTE A)] when using the optional RC-V100 Remote Controller or to [Standard] when using a commercially available remote control.
- Turn off the camcorder, reconnect the remote controller and then turn the camcorder back on again.

Connections with External Devices

Video noise appears on a nearby TV screen.
- When using the camcorder in a room where a TV is located, keep a distance between the compact power adapter and the power or antenna cables of the TV.

Playback looks fine on the camcorder but there is no image on the external monitor.
- The camcorder is not connected correctly to the external monitor. Make sure you are using the correct connection (📖 107).
- The video input on the external monitor is not set to the video terminal to which you connected the camcorder. Select the correct video input.

The camcorder is connected using the optional HTC-100 High Speed HDMI cable, but there is no picture or sound from the external monitor.
- Disconnect the High Speed HDMI cable and then restore the connection or turn the camcorder off and then on again.
- The connected monitor is not compatible with the current video output configuration (📖 105). Change the video configuration to one that the monitor supports.

The computer does not recognize the camcorder even though the camcorder is connected correctly.
- Connect the camcorder to the computer only while the photo index screen is displayed.
- Disconnect the USB cable and turn off the camcorder. After a short while, turn it on again and restore the connection.
- Connect the camcorder to a different USB port on the computer.

Cannot transfer MP4 clips and photos to the computer.
- The card contains too many MP4 clips and photos. Delete recordings until the card contains a combined total of 2,500 (Windows)/1,000 (macOS) or fewer recordings and then use a card reader to transfer the recordings from the card.

List of Messages

Refer to this section if a message appears on the screen. The messages in this section appear in alphabetical order. Note that for some messages, an indication of the card involved (A, B, etc.) may appear above the message itself.

Accessing the memory card. Do not remove the memory card.
- You opened the card compartment cover while the camcorder was accessing the card or the camcorder started accessing the card as you opened the card compartment cover. Do not remove the card until this message disappears.

Back up recordings regularly
- This message may appear when you turn on the camcorder. In the event of a malfunction, recordings may be lost so back up your recordings regularly.

Battery communication error. Does this battery display the Canon logo?
- You attached a battery pack that is not recommended by Canon for use with this camcorder.
- If you are using a battery pack recommended by Canon for use with this camcorder, there may be a problem with the camcorder or battery pack. Consult a Canon Service Center.

Battery pack is not compatible. Turning off the camcorder.
- A battery pack not recommended by Canon for use with this camcorder was attached and the camcorder was turned on. The camcorder will automatically turn off in 4 seconds.

Cannot play back
- Clips cannot be played back from a 512 MB or smaller card. Use a recommended card (📖 32).

Cannot play back Check the memory card
- There is a problem with the card. Save your recordings (📖 113) and initialize the card (📖 33). If the problem persists, use a different card.

Cannot play back Initialize only using the camcorder
- The card in the camcorder was initialized using a computer. Initialize the card with this camcorder (📖 33).

Cannot record on this memory card
- Clips cannot be recorded on a 512 MB or smaller card. Use a recommended card (📖 32).

Cannot trim the clip
- MP4 clips that were recorded or copied using other devices cannot be trimmed.

Charge the battery pack
- Battery pack is depleted. Charge the battery pack.

Check the memory card
- Cannot access the card. Check the card and make sure it is inserted correctly.
- A card error occurred. The camcorder cannot record or display the image. Try removing and reinserting the card, or use a different card.
- You inserted a MultiMedia Card (MMC) into the camcorder. Use a compatible SD card (📖 32).
- If after the message disappears, A/B appears in red, perform the following: Turn off the camcorder and remove and reinsert the card. If A/B turns back to green you can resume recording/playback. If the problem persists, save your clips (📖 113) and initialize the card (📖 33).

File name error
- The folder and file numbers have reached their maximum value. Save your recordings (📖 113), set MENU ➤ [Recording Setup] ➤ [MP4 Clip / Photo Numbering] to [Reset] and delete all the MP4 clips and photos (📖 101) or initialize the card (📖 33).

Initialize only using the camcorder
- Initialize the card with this camcorder (📖 33).

May not be possible to record movies on this memory card
- You may not be able to record clips on an SD card without a Speed Class rating or with a rating lower than recommended. To record clips with a resolution of 3840x2160 or using slow & fast motion recording, use an SD card rated UHS Speed Class U3. To record other clips, use an SD card rated SD Speed Class 6* or 10, or UHS Speed Class U1 or U3.
  * Only for MP4 clips. Do not use to record XF-AVC clips.

Memory card cover is open
- Close the card compartment cover after inserting a card.

Memory card is full
- The card is full. Delete some recordings (📖 101) to free some space or replace the card.

Memory card is write-protected
- The LOCK switch on the SD card is set to prevent accidental erasure. Change the position of the LOCK switch.

No clips
- There are no clips of the selected video format on the selected card.

No memory card
- Insert a compatible card into the camcorder (📖 33).

No photos
- There are no photos on the selected card.

Number of clips already at maximum
- The card selected for recording already contains the maximum number of XF-AVC clips (999 clips). Replace the card or use the card in the other SD card slot.
- Cannot keep recording in dual recording mode because both cards reached the maximum number of XF-AVC clips.

Operation canceled
- Clips cannot be recorded because the control data is corrupted or an encoder error has occurred. (Control data cannot be recovered with the camcorder.) Turn the camcorder off and the on again. Remove the cards and reinsert them, or replace them with new cards. If the problem persists, consult a Canon Service Center.
- Corrupted file control information cannot be recovered. Cards or XF-AVC clips with corrupt file control information cannot be read by Canon XF Utility.

Process terminated with error
- The card compartment cover was opened or an error occurred during the initialization of a card. Initialize the card again. If the card still causes an error message, try replacing the card.

Recording was stopped due to insufficient write speed of the memory card

- The write speed of the SD card was too slow so recording was stopped. To record clips with a resolution of 3840x2160 or using slow & fast motion recording, use an SD card rated UHS Speed Class U3. To record other clips, use an SD card rated SD Speed Class 6* or 10, or UHS Speed Class U1 or U3.
  * Only for MP4 clips. Do not use to record XF-AVC clips.
- After repeatedly recording, deleting and editing clips (fragmented memory), it will take longer to write data on the SD card and recording may stop. Save your recordings (📖 113) and initialize the card (📖 33).

Some clips could not be deleted

- Clips that were protected/edited with other devices and then transferred to a card connected to the computer cannot be deleted with this camcorder.

Some clips require data recovery

- The power may have been suddenly turned off or the card may have been removed while the camcorder was recording. As a result, one or more XF-AVC clips contain corrupted data. You can try to recover the clips (📖 35).

Task in progress. Do not disconnect the power source.

- The camcorder is updating the card. Wait until the operation ends and do not disconnect the compact power adapter or remove the battery pack.

This photo cannot be displayed

- You may not be able to display photos taken with other devices or image files created or edited on a computer and then transferred to a card connected to the computer.

Too many photos and MP4 movies. Disconnect the USB cable.

- The card contains too many MP4 clips and photos. Disconnect the USB cable and delete recordings until the card contains a combined total of 2,500 (Windows)/1,000 (macOS) or fewer recordings and then use a card reader to transfer the recordings from the card.
- If a dialog box appeared on the computer screen, close it. Disconnect the USB cable, and restore the connection after a short while.

Unable to recognize the data

- The camcorder cannot recognize data that was recorded using a video configuration that is not supported (NTSC).

Unable to recover data

- Could not recover a corrupted file. Save your recordings (📖 113) and initialize the card (📖 33).
- The camcorder may not be able to recover clips when there is not enough space on the card. Delete some clips (📖 101) to free some space.

Safety Instructions and Handling Precautions

Be sure to read these instructions in order to operate the product safely. Follow these instructions to prevent injury or harm to the operator of the product or others.

⚠ WARNING

Denotes the risk of serious injury or death.

- Stop using the product in any case of unusual circumstances such as the presence of smoke or a strange smell.
- Do not touch any exposed internal parts.
- Do not get the product wet. Do not insert foreign objects or liquids into the product.
- Do not touch the product connected to a power outlet during lightning storms. This may cause electric shock.
- Do not disassemble or modify the product.
- Do not expose the product to strong shocks or vibration.
- Observe the following instructions when using commercially available batteries or provided battery packs.
  - Use batteries/battery packs only with their specified product.
  - Do not heat batteries/battery packs or expose them to fire.
  - Do not charge batteries/battery packs using non-authorized battery chargers.
  - Do not expose the terminals to dirt or let them come into contact with metallic pins or other metal objects.
  - Do not use leaking batteries/battery packs. If a battery/battery pack leaks and the material contacts your skin or clothing, flush the exposed area thoroughly with running water. In case of eye contact, flush thoroughly with copious amounts of clean running water and seek immediate medical assistance.
  - When disposing of batteries/battery packs, insulate the terminals with tape or other means. This may cause electric shock, explosion or fire.
- Use only power sources specified in this instruction manual for use with the product.
- Observe the following instructions when using a battery charger or compact power adapter.
  - Do not plug in or unplug the product with wet hands.
  - Do not use the product if the power plug is not fully inserted into the power outlet.
  - Do not expose the power plug and terminals to dirt or let them come into contact with metallic pins or other metal objects.
  - Do not place heavy objects on the power cord. Do not damage, break or modify the power cord.
  - Do not wrap the product in cloth or other materials when in use or shortly after use when the product is still warm in temperature.
  - Do not unplug the product by pulling the power cord.
  - Do not leave the product connected to a power source for long periods of time.
- Do not allow the product to maintain contact with the same area of skin for extended periods of time during use. This may result in low-temperature contact burns, including skin redness and blistering, even if the product does not feel hot. The use of a tripod or similar equipment is recommended when using the product in hot places and for people with circulation problems or less sensitive skin.
- Keep the product and its battery out of reach of children. Do not insert or change batteries in front of children.
- If you think a child has swallowed a battery, contact a physician immediately. Batteries contain harmful chemicals and can cause damage to internal organs if ingested.
- Periodically remove any dust buildup from the power plug and power outlet using a dry cloth.

⚠ CAUTION

Denotes the risk of injury.

- Do not leave the product in places exposed to extremely high or low temperatures. The product may become extremely hot/cold and cause burns or injury when touched.
- Only mount the product on a tripod that is sufficiently sturdy.
- Do not look at the screen or through the viewfinder for prolonged periods of time. This may induce symptoms similar to motion sickness. In such a case, stop using the product immediately and rest for a while before resuming use.

Camcorder

Be sure to observe the following precautions to ensure maximum performance.

- **Save your recordings periodically.** Make sure to transfer your recordings to a computer (📖 113) and save them on a regular basis. This will protect your important recordings in case of damage and create more free space on the card. Canon shall not be liable for any data loss.
- Do not use or store the camcorder in dusty or sandy places. The camcorder is not waterproof – avoid also water, mud or salt. If any of the above should get into the camcorder it may damage the camcorder and/or the lens.
- Do not use the camcorder near strong electromagnetic fields such as near powerful magnets and motors, MRI machines or high-voltage power lines. Using the camcorder in such places may cause anomalies in the video, or audio or video noise to appear.
- Do not point the camcorder or viewfinder toward an intense light source, such as the sun on a sunny day or an intense artificial light source. Doing so may damage the image sensor or the camcorder's internal components. Be careful especially when using a tripod or shoulder strap. When the camcorder is not in use, keep the lens barrier closed.
- Do not carry the camcorder by the LCD panel. Be careful when closing the LCD panel. When using a wrist strap, do not allow the camcorder to swing and hit an object.
- **Handle the touch screen with care.** Do not apply excessive force and do not use ballpoint pens or other hard-tipped tools to operate the touch screen. This may damage the touch screen's surface.
- Do not attach protective film on the touch screen. The camcorder features a capacitive touch screen so you may not be able to correctly operate the touch screen with an additional protective layer.
- When mounting the camcorder on a tripod, make sure that the tripod's fastening screw is shorter than 6 mm. Using other tripods may damage the camcorder.

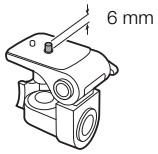

- **When recording movies, try to get a calm, stable picture.** Excessive camcorder movement while shooting and extensive use of fast zooms and panning can result in jittery scenes. In extreme cases, the playback of such scenes may result in visually induced motion sickness. If you experience such a reaction, stop the playback immediately and take a rest break as necessary.

Long-term storage

If you do not intend to use the camcorder for a long time, store it in a place free of dust, in low humidity, and at temperatures not higher than 30 °C.

Battery Pack

DANGER!

Treat the battery pack with care.

- Keep it away from fire (or it might explode).
- Do not expose the battery pack to temperature higher than 60 °C. Do not leave it near a heater or inside a car in hot weather.
- Do not try to disassemble or modify it.
- Do not drop it or subject it to shocks.
- Do not get it wet.

- Dirty terminals may cause a poor contact between the battery pack and the camcorder. Wipe the terminals with a soft cloth.

Long-term storage

- Store battery packs in a dry place at temperatures no higher than 30 °C.
- To extend the battery life of the battery pack, depleted it completely before storing it.
- Charge and depleted all your battery packs fully at least once a year.

Remaining battery time

When you are using a battery pack that is compatible with Intelligent System, if the remaining battery time displayed is not correct, charge the battery pack fully. Still, the correct time may not be displayed if a fully charged battery pack is used continuously in high temperatures or it is left unused for long periods of time. Also, the correct remaining time may not be displayed, depending on the battery life. Use the time shown on the screen as an approximation.

Regarding the use of non-Canon battery packs

- For your safety, battery packs that are not genuine Canon battery packs will not be charged even if you attach them to this camcorder or to the optional CG-800E Battery Charger.
- We recommend using genuine Canon battery packs bearing the Intelligent System mark. Intelligent Li-ion Battery
- If you attach to the camcorder battery packs that are not genuine Canon battery packs, will appear and the remaining battery time will not be displayed.

SD Card

- We recommend backing up the recordings on the SD card onto your computer. Data may be corrupted or lost due to card defects or exposure to static electricity. Canon shall not be liable for lost or corrupted data.
- Do not touch or expose the terminals to dust or dirt.
- Do not use SD cards in places subject to strong magnetic fields.
- Do not leave SD cards in places subject to high humidity and high temperature.
- Do not disassemble, bend, drop, or subject SD cards to shocks and do not expose them to water.
- Check the direction before inserting the SD card. Forcing an SD card into a slot if it is not correctly oriented may damage the card or the camcorder.
- Do not attach any labels or stickers on the SD card.

Disposal

When you delete clips or initialize an SD card, only the file allocation table is altered and stored data is not physically erased. When you dispose of an SD card or give either to another person, initialize it first (33). Fill it up with unimportant recordings, and then initialize it again. This makes recovering the original recordings very difficult.

Built-in Backup Battery

The camcorder has a built-in rechargeable lithium battery to keep the date/time and other settings. The built-in backup battery is recharged while you use the camcorder; however, it will be completely depleted if you do not use the camcorder for about 3 months.

To recharge the built-in backup battery: Connect the compact power adapter to the camcorder and leave it connected for 24 hours with the camcorder off.

Lithium Button Battery

WARNING

- The battery used in this device may present a fire or chemical burn hazard if mishandled.
- Do not disassemble, modify, immerse in water, heat above 100 °C or incinerate the battery.
- Do not insert the battery into the mouth. If swallowed, seek medical assistance immediately. The battery case may break and the battery fluids may cause internal injuries.
- Keep the battery out of the reach of children.
- Do not recharge, short-circuit or insert the battery in the wrong direction.
- The used battery should be returned to the supplier for safe disposal.

- Do not pick up the battery using tweezers or other metal tools, as this will cause a short circuit.
- Wipe the battery with a clean dry cloth to ensure proper contact.

Maintenance/Others

Cleaning

Camcorder body

- Use a soft, dry cloth to clean the camcorder body. Never use chemically treated cloths or volatile solvents such as paint thinner.

Lens

- Remove any dust or dirt particles using a non-aerosol type blower.
- Use a clean, soft lens-cleaning cloth to gently wipe the lens. Never use tissue paper.

LCD screen

- Clean the LCD screen using a clean, soft lens-cleaning cloth and commercially available fluid for eyeglasses.
- Condensation may form on the surface of the screen when the temperature changes suddenly. Wipe it with a soft dry cloth.

Condensation

Moving the camcorder rapidly between hot and cold temperatures may cause condensation (water droplets) to form on its internal surfaces. Stop using the camcorder if condensation is detected. Continued use may damage the camcorder.

Condensation may form in the following cases:

- When the camcorder is moved quickly from cold to warm places
- When the camcorder is left in a humid room
- When a cold room is heated rapidly

To avoid condensation

- Do not expose the camcorder to sudden or extreme changes in temperature.
- Remove the SD cards and battery pack. Then, place the camcorder in an airtight plastic bag and let it adjust gradually to temperature changes before removing it from the bag.

When condensation is detected

The precise time required for water droplets to evaporate will vary depending on the location and weather conditions. As a general rule, wait for 2 hours before resuming use of the camcorder.

Using the Camcorder Abroad

Power Sources

You can use the compact power adapter to operate the camcorder and the battery charger to charge battery packs in any country/region with power supply between 100 and 240 V AC, 50/60 Hz. Consult a Canon Service Center for information on plug adapters for overseas use.

Optional Accessories

The following optional accessories are compatible with this camcorder. Their availability differs from area to area. Some accessories are described in more detail in the following pages.

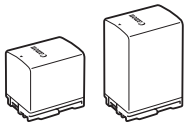

BP-820, BP-828
Battery Pack

CG-800E
Battery Charger

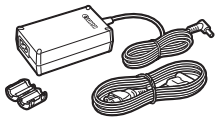

CA-570
Compact Power Adapter

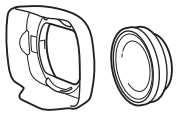

WA-U58
Wide Attachment

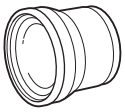

TL-U58
Tele-converter

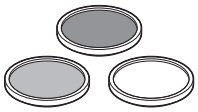

Protect Filter 58 mm,
ND4L Filter 58 mm,
ND8L Filter 58 mm

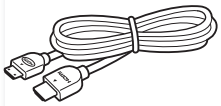

HTC-100
High Speed HDMI Cable

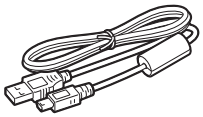

IFC-400PCU
USB Cable

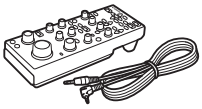

RC-V100
Remote Controller

GP-E2
GPS Receiver

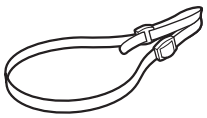

SS-600/SS-650
Shoulder Strap

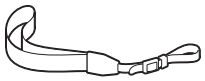

WS-20
Wrist Strap

SC-2000
Soft Carrying Case

Use of genuine Canon accessories is recommended.
The message [Battery communication error] is displayed if you use a non-genuine Canon battery pack, and user response is required. Note that Canon shall not be liable for any damages resulting from accidents, such as malfunction or fire, that occur due to use of non-genuine Canon battery packs.

Battery Packs

When you need extra battery packs, select one of the following models: BP-820 or BP-828.

When you use battery packs bearing the Intelligent System mark, the camcorder will communicate with the battery and display the remaining usage time (accurate to 1 minute). You can only use and charge these battery packs with camcorders and chargers compatible with Intelligent System.

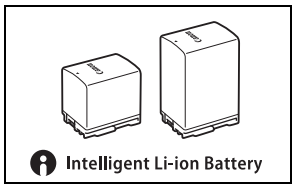

CG-800E Battery Charger

Use the battery charger to charge the battery packs.

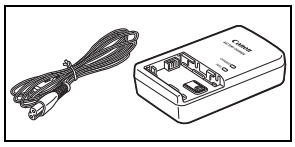

TL-U58 Tele-Converter

- The minimum focusing distance at full telephoto with the tele-converter is 1.3 m.
- The tele-converter cannot be used together with the supplied lens hood.

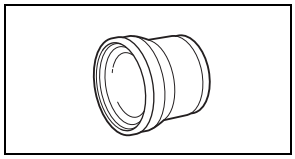

WA-U58 wide attachment

- The wide attachment cannot be used together with the supplied lens hood.

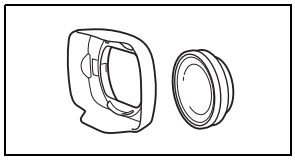

This mark identifies genuine Canon video accessories. When you use Canon video equipment, we recommend Canon-brand accessories or products bearing the same mark.

Specifications

XA55 / XA50

♦ — **Values given are approximate figures.**

System

- Recording System
  Clips:
  MP4
  Video compression: MPEG-4 AVC/H.264
  Audio format: MPEG-2 AAC-LC, 16 bit, 48 kHz, 2 channels
  Linear PCM, 16 bit, 48 kHz, 4 channels
  File format: MP4
  XF-AVC
  Video compression: MPEG-4 AVC/H.264
  Audio format: Linear PCM, 24 bit, 48 kHz, 4 channels
  File format: MXF (XF-AVC)
  Photos:
  DCF (Design rule for Camera File system), compatible with Exif Ver. 2.3, JPEG compression
- Video Configuration (recording/playback)
  MP4
  3840x2160: 150 Mbps / 25.00P
  1920x1080: 35 Mbps, 17 Mbps / 50.00P, 25.00P
  Color sampling: YCbCr 4:2:0, 8 bit
  XF-AVC
  3840x2160: 160 Mbps / 25.00P
  1920x1080: 45 Mbps / 50.00P, 50.00i, 25.00P
  Color sampling: YCbCr 4:2:0, 8 bit
- Recording Media (not included)
  SD, SDHC (SD High Capacity) or SDXC (SD eXtended Capacity) card (2 slots)
- Image Sensor
  1.0-type single-plate CMOS sensor
  Effective pixels: 8,290,000 pixels♦ (3840x2160)
- LCD Touch Screen
  7.50 cm (3.0 in.), wide, color TFT LCD, 460,000 dots♦, 100% coverage, capacitive touch screen operation
- Viewfinder: 0.61 cm (0.24 in.) wide, color LCD, equivalent to 1,560,000 dots♦, 100% coverage
- Microphone: Stereo electret condenser microphone
- Lens
  f=8.3 – 124.5 mm, F/2.8 – 4.5, 15x optical zoom, 9-blade iris diaphragm
  35mm equivalent focal length: 28.3 - 424.6 mm♦ (Dynamic IS)
  25.5 - 382.5 mm♦ (other IS modes)
- Lens Configuration
  18 elements in 14 groups (2 aspheric elements)
- Filter Diameter: 58 mm
- Focus
  Manual focus, autofocus (AF-boosted MF, continuous AF)
  AF type: Dual Pixel CMOS AF, contrast-detection AF
  Minimum focusing distance: 60 cm throughout the zoom range; 1 cm at full wide angle

- White Balance
  Automatic white balance (AWB); 2 preset settings (daylight, tungsten lamp); color temperature setting; custom white balance (2 sets)
- Minimum Illumination♦
  0.1 lx ([Low Light] shooting mode, shutter speed 1/2)
  1.4 lx ([P Programmed AE] shooting mode, 50.00P, shutter speed 1/25, auto slow shutter [On])
- Image Stabilization
  Optical-shift image stabilizer + digital compensation (Standard IS, Dynamic IS, Powered IS)
- Size of Photos
  3840x2160 (3,080 KB), 1920x1080 (880 KB)
  The number in parentheses indicates the approximate file size (for reference only).

Terminals

- XA55 SDI OUT Terminal
  BNC jack, output only, 0.8 Vp-p / 75 Ω, unbalanced
  3G-SDI: SMPTE 424, SMPTE 425, SMPTE ST 299-2
  HD-SDI: SMPTE 292, SMPTE ST 299-1
  Embedded audio, time code (VITC/LTC)
- HDMI OUT Terminal: HDMI mini connector, output only
- USB Terminal: mini-B receptacle, Hi-Speed USB, output only
- MIC Terminal
  ∅ 3.5 mm stereo mini-jack (unbalanced), plug-in power supply available
  Sensitivity: –65 dBV (auto volume, full scale –12 dB) / 1.5 kΩ or more
  Microphone attenuator: 20 dB
  Plug-in power supply: 2.4 V DC (bias resistance 2.2 kΩ)
- INPUT Terminals (INPUT 1 and INPUT 2 on the handle unit)
  XLR jack (pin1: shield, pin2: hot, pin3: cold), 2 sets (balanced)
  Sensitivity:
  For microphone input: –60 dBu (manual volume center, full scale –18 dB) / 600 Ω
  For line input: 4 dBu (manual volume center, full scale –18 dB) / 10 kΩ
  Microphone attenuator: 20 dB
- ∩ (headphone) Terminal
  ∅ 3.5 mm stereo mini-jack (unbalanced), –17 dBV (32 Ω load, Max volume) / 50 Ω or less
- REMOTE Terminal: ∅ 2.5 mm stereo sub-mini jack, input only

Power/Others

- Power Supply: 7.4 V DC (battery pack), 8.4 V DC (DC IN)
- Power Consumption♦
  3840x2160 recording at 25.00P, using autofocus, LCD screen at normal brightness
  XA55 5.0 W, XA50 4.8 W (MP4 clips: 150 Mbps, XF-AVC clips: 160 Mbps)
- Operating Temperature♦: 0 – 40 °C
- Dimensions♦ [W x H x D] (excluding the grip belt)
  Camcorder body only: 109 x 91 x 214 mm
  Camcorder body with lens hood: 125 x 91 x 265 mm
  Camcorder body with lens hood, handle unit: 140 x 216 x 265 mm

- Weight♦
  Camcorder body (including grip belt): XA55 970 g, XA50 960 g
  Typical working configuration*: XA55 1,445 g, XA50 1,435 g
  * Camcorder with grip belt, lens hood, handle unit with microphone holder, BP-820 battery pack and one SD card.

CA-570 Compact Power Adapter

- Power Supply: 100 – 240 V AC, 50/60 Hz
- Nominal Output / Consumption: 8.4 V DC, 1.5 A / 29 VA (100 V) - 39 VA (240 V)
- Operating Temperature♦: 0 – 40 °C
- Dimensions♦: 52 x 29 x 90 mm
- Weight♦: 135 g

BP-820 Battery Pack

- Battery Type
  Rechargeable lithium ion battery, compatible with Intelligent System
- Nominal Voltage: 7.4 V DC
- Nominal Capacity: 1,780 mAh
- Rated Capacity (minimum): 13 Wh / 1,700 mAh
- Operating Temperature♦: 0 – 40 °C
- Dimensions♦: 30.7 x 39.4 x 40.2 mm
- Weight♦: 85 g

Weight and dimensions are approximate. Errors and omissions excepted.

Reference Tables

Approximate Recording Time on an SD Card

Approximate times, for reference only, based on a continuous recording operation until the card is full.

MP4 clips

MP4 audio format	Resolution (bit rate)	SD card				
		8 GB	16 GB	32 GB	64 GB	128 GB
[2CH AAC 16bit 2CH]	3840x2160 (150 Mbps)	5 min.	10 min.	25 min.	55 min.	110 min.
	1920x1080 (35 Mbps)	25 min.	55 min.	115 min.	240 min.	485 min.
	1920x1080 (17 Mbps)	55 min.	120 min.	245 min.	495 min.	995 min.
[4CH LPCM 16bit 4CH]	3840x2160 (150 Mbps)	5 min.	10 min.	25 min.	55 min.	110 min.
	1920x1080 (35 Mbps)	25 min.	50 min.	110 min.	220 min.	445 min.
	1920x1080 (17 Mbps)	45 min.	100 min.	205 min.	420 min.	845 min.

XF-AVC clips

Resolution (bit rate)	SD card				
	8 GB	16 GB	32 GB	64 GB	128 GB
3840x2160 (160 Mbps)	5 min.	10 min.	25 min.	50 min.	105 min.
1920x1080 (45 Mbps)	20 min.	45 min.	90 min.	185 min.	375 min.

Charging Times

Charging times are approximate and vary according to charging conditions, ambient temperature and initial charge of the battery pack.

Battery pack→ Charging conditions↓	BP-820	BP-828
Using the camcorder and supplied CA-570 compact power adpater	210 min.	300 min.
Using the CG-800E Battery Charger*	190 min.	260 min.

* When using the CG-800E Battery Charger, a room temperature between 10 °C and 30 °C is recommended. For safety reasons, charging outside of the recommended temperature range may result in considerably longer charging times. Charging will not start if either the battery or ambient temperature is outside of an approximate 5 °C to 35 °C range.

Approximate Usage Times with a Fully Charged Battery Pack

The usage times in the following tables are approximate and were measured under the following conditions. Actual times may vary.

- Only the LCD screen was used.
- “Typical recording” times measure recording times with repeated operations such as start/stop recording, zooming and turning the camcorder on/off.
- The effective usage time of the battery pack may decrease when using a bright screen setting, when recording in cold surroundings, etc.

XA55

Video configuration		Usage conditions	Battery pack	
Resolution (bit rate)	Frame rate		BP-820 (supplied)	BP-828 (optional)
MP4 clips				
3840x2160 (150 Mbps)	25.00P	Recording (maximum)	145 min.	220 min.
		Recording (typical)	80 min.	120 min.
		Playback	185 min.	280 min.
1920x1080 (35 Mbps)		Recording (maximum)	165 min.	250 min.
		Recording (typical)	90 min.	140 min.
		Playback	210 min.	315 min.
1920x1080 (17 Mbps)		Recording (maximum)	165 min.	250 min.
		Recording (typical)	90 min.	140 min.
		Playback	210 min.	315 min.
XF-AVC clips				
3840x2160 (160 Mbps)	25.00P	Recording (maximum)	145 min.	220 min.
		Recording (typical)	80 min.	120 min.
		Playback	185 min.	280 min.
1920x1080 (45 Mbps)		Recording (maximum)	165 min.	250 min.
		Recording (typical)	90 min.	140 min.
		Playback	210 min.	315 min.

XA50

Video configuration		Usage conditions	Battery pack	
Resolution (bit rate)	Frame rate		BP-820 (supplied)	BP-828 (optional)
MP4 clips				
3840x2160 (150 Mbps)	25.00P	Recording (maximum)	150 min.	230 min.
		Recording (typical)	85 min.	125 min.
		Playback	190 min.	290 min.
1920x1080 (35 Mbps)		Recording (maximum)	170 min.	265 min.
		Recording (typical)	95 min.	145 min.
		Playback	215 min.	325 min.
1920x1080 (17 Mbps)		Recording (maximum)	170 min.	265 min.
		Recording (typical)	95 min.	145 min.
		Playback	225 min.	340 min.
XF-AVC clips				
3840x2160 (160 Mbps)	25.00P	Recording (maximum)	150 min.	230 min.
		Recording (typical)	85 min.	125 min.
		Playback	190 min.	290 min.
1920x1080 (45 Mbps)		Recording (maximum)	170 min.	265 min.
		Recording (typical)	95 min.	145 min.
		Playback	215 min.	325 min.

Index

(headphones) terminal 85
4-channel audio recording 77

A

Abroad, using the camcorder 133
Accessories 134
AGC (automatic gain control) limit 62
Aperture (f number) 65, 66
Assignable buttons 94
Audio format 77
Audio limiter 83
Audio output channels 110
Audio recording level 81
Audio reference signal 86
AUTO mode 26
Auto slow shutter 117
Av (shooting mode) 66

B

Backlight correction 68
Battery pack
- Battery information 121
- Charging 17
- Remaining battery charge 19, 42

Beach (shooting mode) 63
Built-in backup battery 131

C

Canon XF Utility (download) 113
Clips
- Clip information 100
- Clip numbering 39, 119
- Copying 103
- Deleting 101
- Playback 97
- Recording 37
- Recovering 35
- Saving to a computer 113
- XF-AVC clip name format 39

Color bars 86
Condensation 133
Connection to external devices 107
Conversion lenses 117
Copying recordings 103
CUSTOM button 93
CUSTOM dial 93

D

Date and time 27
DC IN terminal 17
Deleting recordings 101
Digital tele-converter 58
Dual recording 34

E

Exposure
- Exposure compensation 68
- Exposure lock 67
- Manual exposure 65
- Touch exposure 67

F

Face detection & tracking 53
Ferrite core 17
Fireworks (shooting mode) 64
Flicker reduction 117
Focus 47
- AF-Boosted MF 51
- Continuous AF 52
- Face-only AF 54
- Focus assistance functions 48
- Focus preset 48
- Manual focus 47
- Touch focus 47

Focus guide 49
Focus/zoom ring 47, 55
Frame rate 44
Free-run (time code) 74
FUNC menu 30, 115

G

Gain 65
GPS information 90, 100

H

Handle unit 20
HDMI OUT terminal 107, 108
Headphones 85

I

Image stabilizer 60
Index screens 97

Infrared light 88
Infrared recording 88
Initializing a card 33
INPUT terminals 77

J

Joystick 29

L

Language 28
LCD touch screen 22
Lens hood 21
Looks 73
Low light (shooting mode) 63

M

M (Manual) mode 26
M (shooting mode) 65
Magnification 50
Maintenance 133
Menu settings 96, 115
Message list 126
MIC terminal 79
Microphone
- Attenuator 83, 84
- Built-in 77
- External 79
- Low cut filter 84
- Sensitivity 83

Mode switch 26
MP4 Join Tool (download) 113

N

ND filter 70
Night scene (shooting mode) 63
Notification sounds 120

O

Onscreen displays 41, 98, 120
Onscreen markers 120

P

P (shooting mode) 66
Peaking 49
Phantom power (microphone) 79
Photos
- Copying 103
- Deleting 101
- Photo numbering 119
- Recording 37
- Viewing 97

Playback 97
Plug-in power (microphone) 84
Portrait (shooting mode) 63
Power supply 17
Powered IS 60
Pre-recording 87
Priority white balance 117
PsF (forced 1080i output) 109

R

Rec run (time code) 74
Recording 37
Reference tables (charging, usage and recording times) 139
Relay recording 34
Remote controller 89
Remote sensor 24
REMOTE terminal 89
Resetting all camcorder settings 122
Resolution (frame size) 44
Reviewing a clip 39
Running mode (time code) 74

S

Saving clips to a computer 113
Scan mode 109
SD card
- Compatible SD cards 32
- Initializing 33
- Inserting/Removing 33
- Recording method 34
- Selecting the card for recording 34

SDI OUT terminal* 107
Setup menus 29, 116
Shooting mode 63
Shutter speed 65, 66
Slow & fast motion recording 46
Snow (shooting mode) 63
Specifications 136
Sports (shooting mode) 63

* XA55 only.

Spotlight (shooting mode) 63
Sunset (shooting mode) 63

T

Tally lamp 15, 37
Time code 74
Time zone/DST 28
Touch assignable button 94
Trimming MP4 Clips 102
Tripod 14, 130
Troubleshooting 123
Tv (shooting mode) 66

U

USB terminal 90
User bit 76

V

Video configuration 44
Video format (XF-AVC, MP4) 44
Video output configuration 105, 113
Viewfinder 22
Volume 99

W

White balance 71
Wide DR 73
Wireless controller 16, 24

Z

Zebra pattern 69
Zoom 55
Digital zoom 116
High-speed zoom 56
Zoom speed 56

Trademark Acknowledgements

- SD, SDHC and SDXC Logos are trademarks of SD-3C, LLC.
- Microsoft and Windows are trademarks or registered trademarks of Microsoft Corporation in the United States and/or other countries.
- macOS is a trademark of Apple Inc., registered in the U.S. and other countries.
- HDMI, the HDMI logo and High-Definition Multimedia Interface are trademarks or registered trademarks of HDMI Licensing Administrator, Inc. in the United States and other countries.
- Other names and products not mentioned above may be trademarks or registered trademarks of their respective companies.

- This device incorporates exFAT technology licensed from Microsoft.
- This product is licensed under AT&T patents for the MPEG-4 standard and may be used for encoding MPEG-4 compliant video and/or decoding MPEG-4 compliant video that was encoded only (1) for a personal and non-commercial purpose or (2) by a video provider licensed under the AT&T patents to provide MPEG-4 compliant video. No license is granted or implied for any other use for MPEG-4 standard.
- THIS PRODUCT IS LICENSED UNDER THE AVC PATENT PORTFOLIO LICENSE FOR THE PERSONAL USE OF A CONSUMER OR OTHER USES IN WHICH IT DOES NOT RECEIVE REMUNERATION TO (i) ENCODE VIDEO IN COMPLIANCE WITH THE AVC STANDARD (“AVC VIDEO”) AND/OR (ii) DECODE AVC VIDEO THAT WAS ENCODED BY A CONSUMER ENGAGED IN A PERSONAL ACTIVITY AND/OR WAS OBTAINED FROM A VIDEO PROVIDER LICENSED TO PROVIDE AVC VIDEO. NO LICENSE IS GRANTED OR SHALL BE IMPLIED FOR ANY OTHER USE. ADDITIONAL INFORMATION MAY BE OBTAINED FROM MPEG LA, L.L.C. SEE HTTP://WWW.MPEGLA.COM
- This camcorder supports Exif 2.3 (also called “Exif Print”). Exif Print is a standard for enhancing the communication between camcorders and printers. By connecting to an Exif Print-compliant printer, the camcorder’s image data at the time of shooting is used and optimized, yielding extremely high quality prints.

Canon Inc. 30-2, Shimomaruko 3-chome, Ohta-ku, Tokyo 146-8501, Japan
Canon Europa N.V. Bovenkerkerweg 59, 1185 XB Amstelveen, The Netherlands http://www.canon-europe.com

- The information in this document in verified as of May 2020. Subject to change without notice. Visit your local Canon website to download the latest version.

© CANON INC. 2020

PUB. DIE-0533-000B