Manuals for the Machine

Guides with this symbol are printed manuals.

Guides with this symbol are PDF manuals included on the accompanying CD-ROM.

- **Setting Up the Machine**
- **Software Installation**

Set-Up Sheet

- **Introduction on Machine Use**

Quick Reference Guide (This Manual)

- **Copying, Printing Instructions**
- **Troubleshooting**

User's Guide

- **Software Installation and Instructions**
- **Troubleshooting**

Software Guide

Model Name
- F146600 (MF3110)

- To view the manuals in PDF format, Adobe Reader/Adobe Acrobat Reader is required. If Adobe Reader/Adobe Acrobat Reader is not installed on your system, please download it from the Adobe Systems Incorporated website.
- Considerable effort has been made to ensure that this manual is free of inaccuracies and omissions. However, as we are constantly improving our products, if you need an exact specification, please contact Canon.

About This Manual

Symbols

CAUTION

Cautions tell you how to avoid actions that could injure you or damage your machine.

IMPORTANT

Importants indicate operational requirements and restrictions. Read them carefully to operate the machine correctly and to avoid damage to the machine.

NOTE

Notes provide advice for using your machine more effectively, describe operating restrictions, and explain how to avoid minor operating difficulties.

Notations

Press **[Start]**.	Keys on the control panel
If **<DISPLAY LANGUAGE>** appears,	Messages on LCD
Click **[OK]**.	Buttons and menu items on the PC screen
User's Guide	Manual names

Contents

Preface

Trademarks 5
Copyright 5
Notice. 5

1 Safety Instructions

1.1 General 6
1.2 Location for the Machine 7
1.3 Laser Safety Information 8
1.4 FCC (Federal Communications Commission) 9
1.5 Customer Support 9

2 Components

2.1 Front View 10
2.2 Rear View 10
2.3 Operation Panel 11

3 Main Functions

3.1 Set Paper Size 12
3.2 Load the Document 12
3.3 Copy. 13
3.3.1 Resolution 13
3.3.2 Density 13
3.3.3 Copy Ratio (Enlarge/Reduce) 13
3.4 Print 14
3.5 Scan. 14

4 Maintenance

4.1 Replace Cartridge 15

5 Troubleshooting

5.1 Remove Jammed Paper 16

Preface

Thank you for purchasing Canon imageCLASS MF3110. Please read this manual to learn the basic operation of the machine. If you have not set up the machine, see *Set-Up Sheet* first.

C-tick marking on the rating label means that we declare the product is in conformity with the relevant requirements at nominal mains input 230 V, 50 Hz although the rated input of the product is 200–240 V, 50/60 Hz.

As an ENERGY STAR® Partner, Canon has determined that the machine meets the Energy Star guidelines for energy efficiency.

Trademarks

Canon and the Canon Logo are trademarks of Canon Inc.
Microsoft and Windows are either registered trademarks or trademarks of Microsoft Corporation in the United States and/or in other countries. Other brand and product names are trademarks or registered trademarks of their respective companies.

Copyright

Copyright 2004 Canon Inc. All rights reserved.
No part of this publication may be reproduced, transmitted, transcribed, stored in a retrieval system, or translated into any language or computer language, in any form or by any means, electronic, mechanical, magnetic, optical, chemical, manual, or otherwise, without the prior written permission of Canon Inc.

Notice

The information in this document is subject to change without notice.
CANON INC. MAKES NO WARRANTY OF ANY KIND WITH REGARD TO THIS MATERIAL, EITHER EXPRESS OR IMPLIED, EXCEPT AS PROVIDED HEREIN, INCLUDING WITHOUT LIMITATION, THEREOF, WARRANTIES AS TO MARKETABILITY, MERCHANTABILITY, FITNESS FOR A PARTICULAR PURPOSE OF USE OR AGAINST INFRINGEMENT OF ANY PATENT. CANON INC. SHALL NOT BE LIABLE FOR ANY DIRECT, INCIDENTAL, OR CONSEQUENTIAL DAMAGES OF ANY NATURE, OR LOSSES OR EXPENSES RESULTING FROM THE USE OF THIS MATERIAL.

1 Safety Instructions

Please read these safety instructions thoroughly before using the machine.

1.1 General

CAUTION

Except as specifically described in *User's Guide*, do not attempt to service the machine yourself. Never attempt to disassemble the machine: opening and removing its interior covers will expose you to dangerous voltages and other risks. For all services, contact your local authorized Canon dealer or the Canon help line.

- Always follow all warnings and instructions marked on the machine.
- Do not use the machine near water. If you spill liquid on or into the machine, unplug it immediately and call your local authorized Canon dealer or the Canon help line.
- The back of the machine includes slots and openings for ventilation. To keep the machine from overheating (which can cause it to operate abnormally and create a fire risk), take care not to block or cover these openings. Do not operate the machine on a bed, sofa, rug, or other similar soft surface, or near a radiator or other heat source. Do not place the machine in a closet or cabinet or on shelves unless adequate ventilation is available.
- Operate the machine only from the type of power source indicated on the label on the back of the machine. If you are unsure of the type of power available from your wall outlets, contact your local power company.
- Make sure the total amperage used by all devices plugged into the wall outlet does not exceed the ampere rating of the outlet's circuit breaker.
- Do not allow anything to rest on the power cord and do not place the machine where the cord will be walked on. Make sure the cord is not knotted or kinked.
- Do not insert object of any kind into the slots or openings on the machine's cabinet, as they could touch dangerous voltage points or short out parts, and result in fire or electric shock.
- Do not allow small objects (such as pins, paper clips, or staples) to fall into the machine. If something does fall into it, unplug the machine immediately and call your local authorized Canon dealer or the Canon help line.
- Do not plug the power cord into an uninterruptible power supply (UPS).
- Always unplug the machine before moving or cleaning it.
- Whenever you unplug the machine, wait at least 5 seconds before you plug it back in.
- Always unplug the machine during thunderstorms.
- Before you transport the machine, remove the toner cartridge.

• Always lift the machine as shown below:

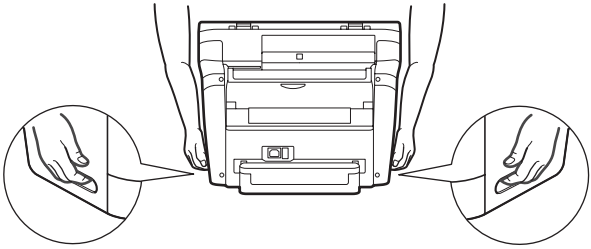

CAUTION

Unplug the machine and contact your local authorized Canon dealer or the Canon help line in any of these situations:
- If the power cord or plug is damaged or frayed.
- If liquid spills into the machine, or if it is otherwise exposed to rain or liquids.
- If you notice smoke, unusual noises or odor coming from it.
- If the machine does not operate normally when you follow the operating instructions. Adjust only those controls that are covered by the operating instructions in the manuals, or you can damage the machine and require extensive repair work.
- If the machine is dropped or its cabinet damaged.
- If the machine begins performing poorly, and you cannot correct the problem by following the procedures in *User's Guide*.
- This product emits low level electromagnetic waves. If you use a cardiac pacemaker and feel abnormalities, move away from this product and consult your doctor.

1.2 Location for the Machine

Install the machine in a location that meets following conditions:

- A flat, stable, vibration-free surface strong enough to support its weight (about 12 kg).
- Cool, dry, clean, well ventilated.
- Dust-free.
- Stable temperature between 10° and 32.5°C. No extreme temperature fluctuations.
- Relative humidity between 20% and 80%.
- No direct sunlight.
- Near an electrical wall outlet that provides 200 to 240-volt AC (50 to 60 Hz) power.
- Near the PC you will connect it to. Make sure you can reach the machine easily.

1.3 Laser Safety Information

Laser radiation could be hazardous to the human body. For this reason, laser radiation emitted inside this product is hermetically sealed within the protective housing and external cover. No radiation can leak from the product in the normal operation of the product by the user. This printer is classified as a Class 1 Laser Product under IEC 60825-1:1993, EN 60825-1:1994, and as for the U.S.A., it is classified as Class I under the Code of Federal Regulations, 1040.10 of Title 21.

■ 200–240 V Model

The label shown to the right is attached to the laser scanner assembly within the product.

This product has been classified under IEC60825-1:1993 and EN60825-1:1994, and conforms to the following classes:

CLASS 1 LASER PRODUCT
LASER KLASSE 1
APPAREIL A RAYONNEMENT LASER DE CLASSE 1
APPARECCHIO LASER DI CLASSE 1
PRODUCTO LASER DE CLASE 1
APARELHO A LASER DE CLASSE 1

PERFORMANCE OF PROCEDURES OTHER THAN THOSE SPECIFIED IN THE MANUALS FOR THIS PRODUCT MAY RESULT IN HAZARDOUS RADIATION EXPOSURE.

1.4 FCC (Federal Communications Commission)

Multi Function Printer, Model F146600

■ 220–240 V Model

This equipment has been tested and found to comply with the limits for a Class A digital device, pursuant to Part 15 of the FCC Rules. These limits are designed to provide reasonable protection against harmful interference when the equipment is operated in a commercial environment. This equipment generates, uses, and can radiate radio frequency energy and if not installed and used in accordance with the instruction manual, may cause harmful interference to radio communications.

Operation of this equipment in a residential area is likely to cause harmful interference, in which case the user will be required to correct the interference at his own expense.

- Use of shielded cable is required to comply with Class A limits in Subpart B of Part 15 of FCC Rules.

Do not make any changes or modifications to the equipment unless otherwise specified in the manuals. If such changes or modifications should be made, you could be required to stop operation of the equipment.

1.5 Customer Support

If you encounter a problem with the machine's operation, try to solve it by referring to *User's Guide*. If you cannot solve the problem or if you think your machine needs servicing, contact your local authorized Canon dealer or the Canon help line.

2 Components

2.1 Front View

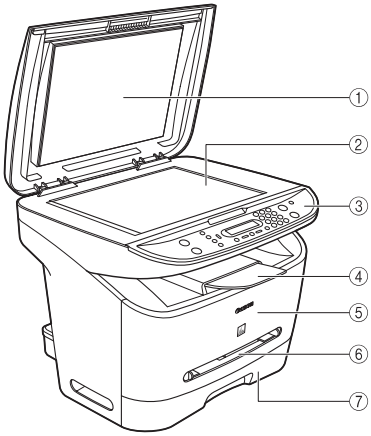

① **Platen glass cover**
② **Platen glass**
③ **Operation panel**
④ **Output tray**
⑤ **Front cover**
⑥ **Multi-purpose feeder**
⑦ **Cassette**

2.2 Rear View

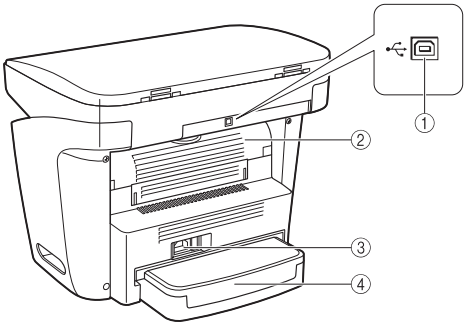

① **USB port**
② **Face up cover**
③ **Power socket**
④ **Extension cover**

NOTE

The cartridge included with the machine is Cartridge U Starter that yields approximately 1,500 pages of printouts.

2.3 Operation Panel

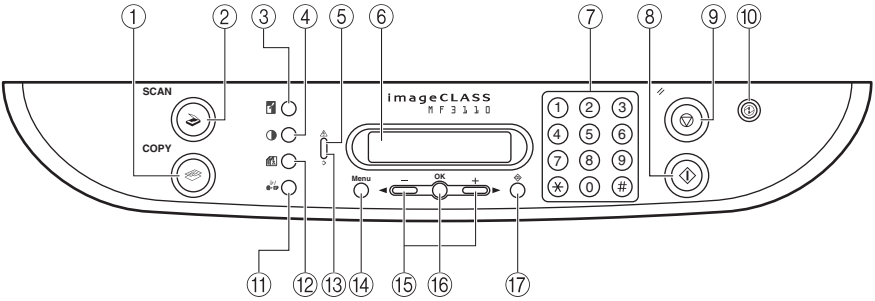

① **COPY key**
② **SCAN key**
③ **Enlarge/Reduce key**
④ **Exposure key**
⑤ **Alarm indicator**
⑥ **LCD**
⑦ **Numeric keys**
⑧ **Start key**
⑨ **Stop/Reset key**
⑩ **Energy Saver key**
⑪ **Collate/2on1 key**
⑫ **Image Quality key**
⑬ **Memory indicator**
⑭ **Menu key**
⑮ **◀ and ▶ keys**
⑯ **OK key**
⑰ **Status Monitor key**

3 Main Functions

3.1 Set Paper Size

1. Press **[Menu]**.
2. Press ◀ or ▶ to select **<1.PAPER SETTINGS>** → **[OK]**.
3. Press ◀ or ▶ to select **<1.CASSETTE>** → **[OK]**.
4. Press ◀ or ▶ to select **<1.PAPER SIZE>** → **[OK]**.
5. Press ◀ or ▶ to select the paper size → **[OK]**.
6. Press **[Stop/Reset]**.

3.2 Load the Document

1. Open the platen glass cover ①.
2. Place your document face down on the platen glass ②.

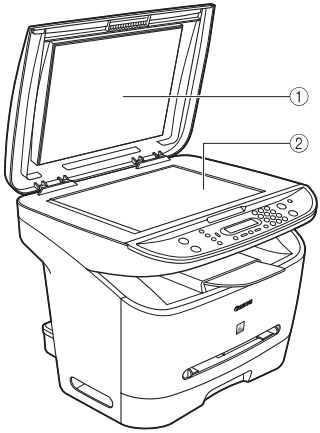

3. Align the document with the paper size marks or center arrow on the left side of the platen glass.
4. Gently close the platen glass cover.

3.3 Copy

1. Load the document. See 3.2, “Load the Document.”
2. Press **[COPY]**.
3. Use numeric keys to enter the required number of copies.
4. Adjust settings if required (see below):
   - Resolution
   - Density
   - Copy ratio (enlarge/reduce)
5. Press **[Start]**.

NOTE

*Press **[Stop/Reset]** to cancel copying.*

■ 3.3.1 Resolution

1. Press **[Image Quality]** to select the required image quality:
   - **<TEXT>** for text-only documents
   - **<PHOTO>** for photographs
   - **<TEXT/PHOTO>** for documents with text and photographs

■ 3.3.2 Density

Automatically:

1. Press **[Exposure]** to select the auto mode → press **[OK]**.

Manually:

1. Press **[Exposure]** to select the manual mode.
2. Press ◀ (lighter) or ▶ (darker) to adjust the copy exposure → press **[OK]**.

■ 3.3.3 Copy Ratio (Enlarge/Reduce)

1. Press **[Enlarge/Reduce]** → ◀ or ▶ to select a copy ratio.
2. Press **[OK]**.

NOTE

You can also set a custom copy ratio selectable in 1% increments. For details, see User’s Guide.

3.4 Print

Follow these steps to print from a PC running Windows XP. For other OS, see *Software Guide*.

1 Open an application on your PC.

2 Select **[Print]** from the **[File]** menu.

3 Select the icon (A) for the printer you want to use.

4 Click **[Preferences]** (B) to change print settings if required. See *Software Guide* for details.

5 Click **[Print]** (C).

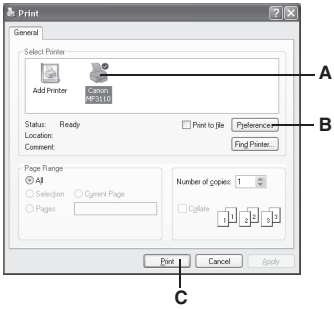

To cancel printing:

1 Click **[Start]** on the Windows task bar.

2 Select **[Control Panel]** → **[Printers and Other Hardware]** → **[Printers and Faxes]**.

3 Double-click the corresponding printer driver icon.

4 Right-click the print job → click **[Cancel Printing]**.

3.5 Scan

Follow these steps to scan a document using the **[SCAN]** key on the machine. To scan from MF Toolbox or a PC application, see *Software Guide*.

1 Load the document. See 3.2, “Load the Document.”

2 Press **[SCAN]** → **[Start]** on the machine to start scanning.

The **[MF Toolbox - Scan Function]** screen appears. For details on scan settings, see *Software Guide*.

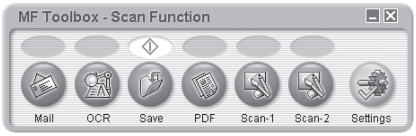

4 Maintenance

4.1 Replace Cartridge

NOTE

If toner comes into contact with your skin or clothing, wash immediately with cold water. Warm water will permanently set the toner.

1 Open the front cover.

2 Pull out the old cartridge horizontally.

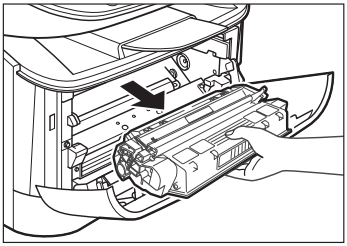

3 Remove the new cartridge from the bag. Keep the bag for future use.

4 Rock the cartridge several times to distribute toner evenly.

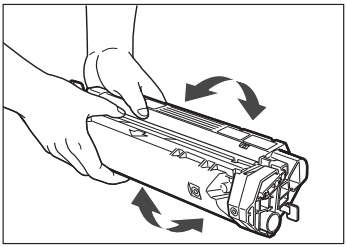

5 Hold the cartridge. Break the tab (A) and pull out the seal (B) completely.

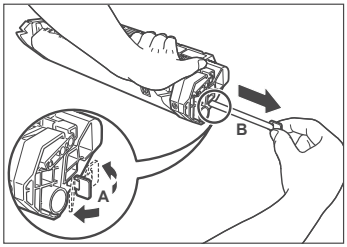

6 Hold the cartridge with instructions (C) face up and arrow (D) pointing to the machine. Insert the cartridge as far as it will go.

7 Close the front cover.

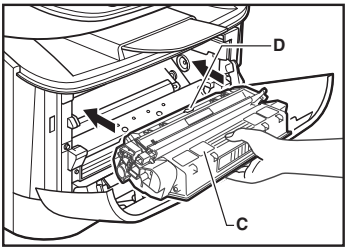

5.1 Remove Jammed Paper

CAUTION

Some areas inside the machine are high in temperature and voltage. Take precaution to avoid burns or electrical shock.

1 Open the front cover and pull out the cartridge horizontally.

IMPORTANT

- *Remove metal items (watches and rings) when touching inside the machine.*
- *Do not touch the transfer roller (A) or pins (B) when removing jammed paper.*

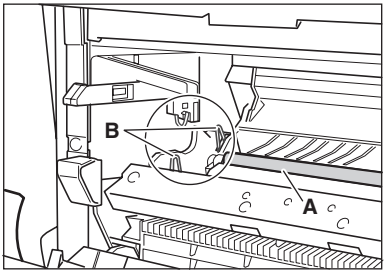

- *Do not open the drum protective shutter (C) or touch the drum inside.*

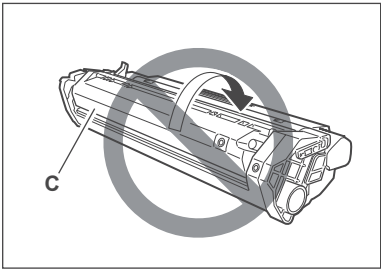

2 Open the face up cover (D) and push down the green levers (E) on both sides.

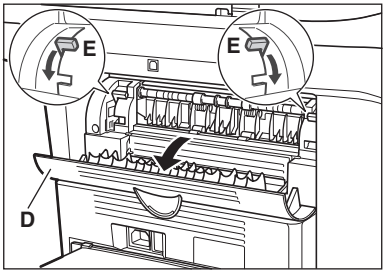

3 Hold both sides of paper and carefully pull the bottom edge of paper out of the machine.

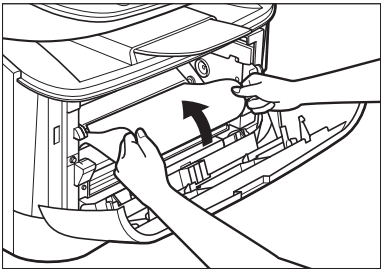

4 Pull out the paper from the machine.

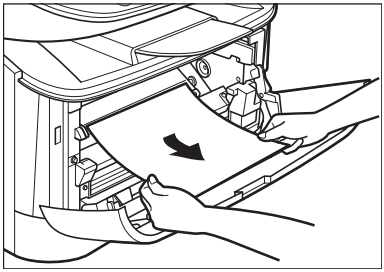

5 If the paper has not entered imaging area, pull it forward and roll it inward.

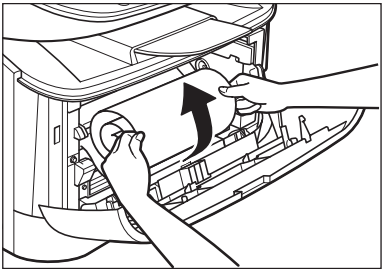

IMPORTANT

- *To avoid machine malfunction, do not pull the jammed paper outward from the cassette.*

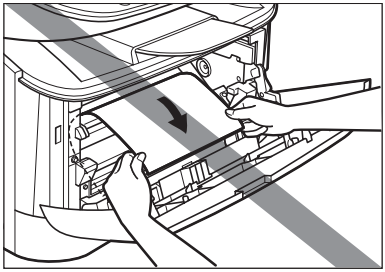

- *To avoid toner staining the machine permanently, do not pull the jammed paper upward.*

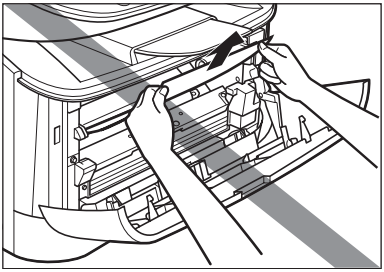

6 Gently pull jammed paper between output rollers until the leading edge appears.

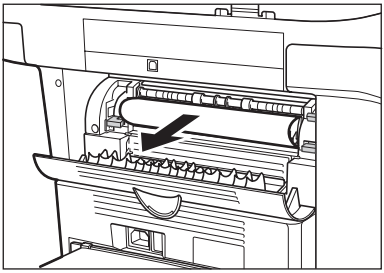

7 Carefully pull out the jammed paper.

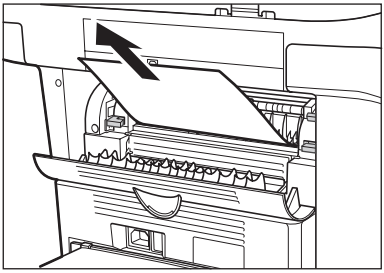

8 For paper jammed in the paper cassette, pull out the cassette first. Pull down the paper out of the machine.

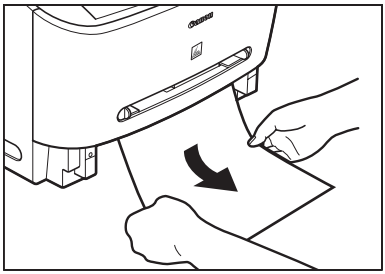

9 For paper jammed in the multi-purpose feeder, hold both sides and pull it out.

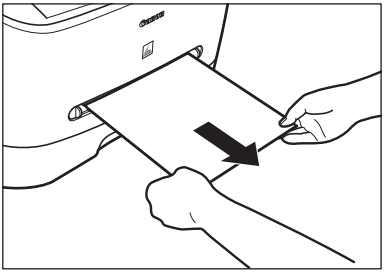

10 Push up the green levers and close the face up cover on the back of the machine.

IMPORTANT

To avoid damage to the fixing assembly, never push down the green levers while printing.

11 Insert the cartridge in the machine and close the front cover.