Canon

imageCLASS
MF4100
Series

Basic Guide

What Can I Do with This Machine?
Before Using the Machine
Document Handling
Print Media
Sending Faxes (MF4140/MF4150 Only)
Receiving Faxes (MF4140/MF4150 Only)
Copying
Printing
Scanning
PC Faxing (MF4140/MF4150 Only)
Maintenance
Troubleshooting
Machine Settings
Appendix

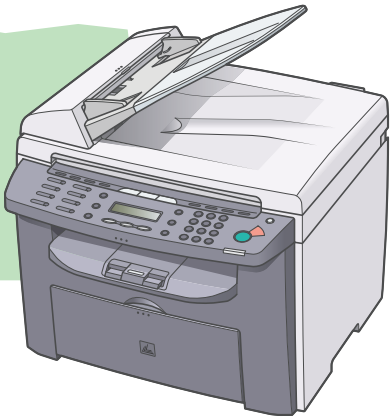

Please read this guide before operating this product.
After you finish reading this guide, store it in a safe place for future reference.

ENG

Manuals for the Machine

- **Machine Set-Up**
- **Software Installation**

Starter Guide

- **Basic Features**
- **Maintenance**
- **Machine Settings**
- **Specifications**

Basic Guide (This Document)

- **Advanced Features**
- **System Monitor**
- **Reports and Lists**

Advanced Guide CD-ROM

- **Scanning Features**

Scanner Driver Guide CD-ROM

CD-ROM **Indicates the manual is supplied in PDF format in the accompanying CD-ROM.**

- To view the manual in PDF format, Adobe Reader/Adobe Acrobat Reader is required. If Adobe Reader/Adobe Acrobat Reader is not installed on your system, please download it from the Adobe Systems Incorporated website.
- Considerable effort has been made to ensure that this manual is free of inaccuracies and omissions. However, as we are constantly improving our products, if you need an exact specification, please contact Canon.
- The machine illustration on the cover may differ slightly from your machine.

What Can I Do with This Machine?

Fax Features (MF4140/MF4150 Only)

Specify a recipient with a single key

One-Touch Speed Dialing

→ p. 4-7

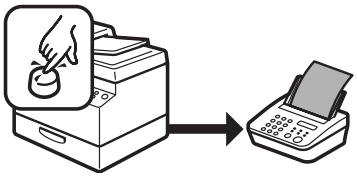

Specify a recipient with a two-digit code

Coded Dialing

→ p. 4-14

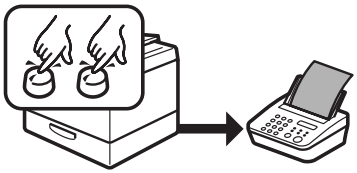

Specify multiple recipients with a single key

Group Dialing

→ p. 4-21

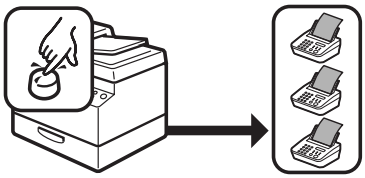

Look up a particular recipient

Using Address Book

→ Advanced Guide

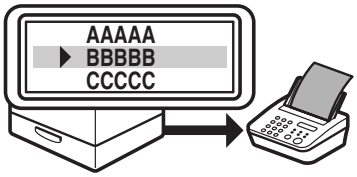

Redial when the line is busy

Redialing

→ Advanced Guide

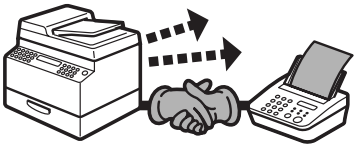

Send a fax to multiple recipients

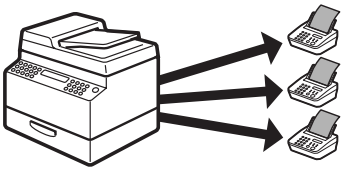

Broadcasting

→ Advanced Guide

Receive faxes in memory without printing out

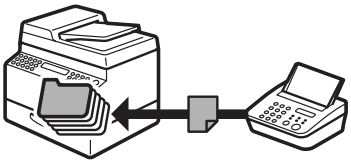

Memory Reception

→ Advanced Guide

Reject faxes without their numbers

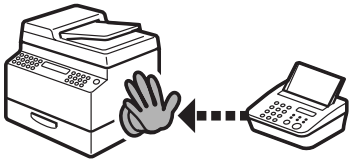

Reception Restriction

→ Advanced Guide

Copy Features

Select a scan mode depending on the type of image

Image Quality

→ p. 6-3

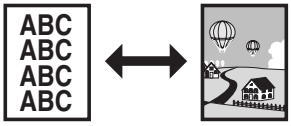

Adjust the density level of scanned images

Density

→ p. 6-4

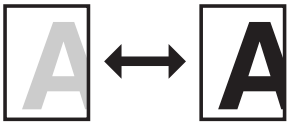

Enlarge or reduce copied images

Zoom Ratio

→ p. 6-6

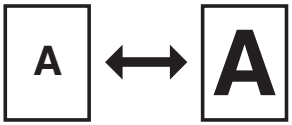

Sorts copies by page order

Collate Copy

→ Advanced Guide

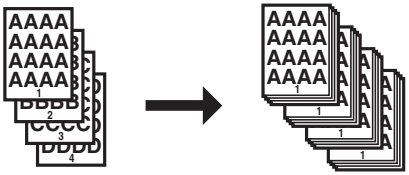

Make two-sided copies

Two-Sided Copying

→ Advanced Guide

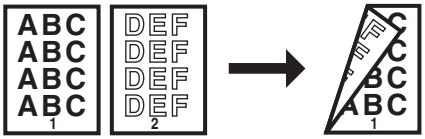

Copy two documents on one sheet

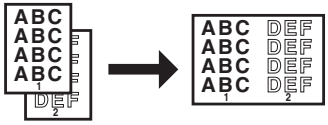

2 on 1 Combination

→ Advanced Guide

Printer Feature

Print a document from a PC

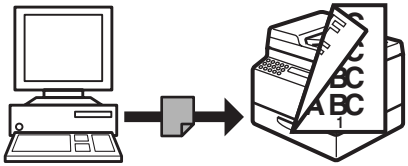

Printing

→ Online Help

Scanner Feature

Specify detailed scanning options to suit various images

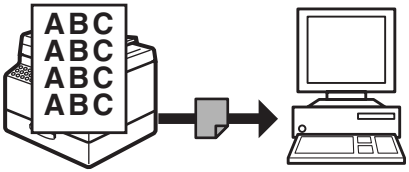

Scanning

→ Scanner Driver Guide

PC Fax Feature (MF4140/MF4150 Only)

Send a fax from a PC

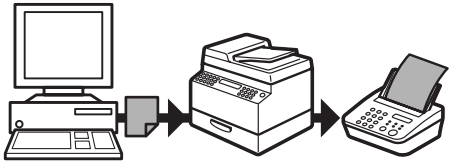

PC Faxing

→ Online Help

Contents

Manuals for the Machine i

What Can I Do with This Machine? ii

Fax Features (MF4140/MF4150 Only) ii
Copy Features iv
Printer Feature v
Scanner Feature v
PC Fax Feature (MF4140/MF4150 Only) vi

Contents vii

How to Use This Guide xii

Symbols Used in This Manual xii
Illustrations Used in This Manual xiii

Legal Notices xiv

Trademarks xiv
Copyright xiv
Disclaimers xiv

Users in New Zealand xv

Caution (New Zealand Only) xv

1 Before Using the Machine 1-1

Machine Components 1-1

Operation Panel 1-4

Main Operation Panel 1-4
Facsimile Operation Panel (MF4140/MF4150 Only) 1-8

LCD (Standby Mode) 1-9

Fax Mode (MF4140/MF4150 Only).....1-9
Copy Mode 1-9
Scan Mode.....1-9

Optional Handset (MF4140/MF4150 Only) 1-10

Maintaining the Handset 1-10

Toner Cartridge.....1-11

Maintaining the Toner Cartridge 1-12
Checking the toner level 1-13

Timer Settings.....1-14

Setting the Sleep Mode 1-14
Setting Daylight Saving Time
(MF4140/MF4150 Only).....1-17

2 Document Handling.....2-1

Document Requirements 2-1

Scanning Area.....2-3

Loading Documents 2-4

On the Platen Glass.....2-4
In the ADF (MF4150 Only).....2-6

3 Print Media 3-1

Paper Requirements.....3-1

Printable Area 3-2

Paper Guidelines 3-3

Loading Paper **3-4**
Into the Multi-Purpose tray 3-4
Setting Paper Size and Type **3-7**

4 Sending Faxes (MF4140/MF4150 Only) **4-1**
Scan Settings **4-3**
Image Quality 4-3
Density 4-5
Speed Dialing **4-6**
Registering Recipients for Speed Dialing 4-6
Using Speed Dialing 4-30
Manual Sending (MF4150 Only) **4-32**

5 Receiving Faxes (MF4140/MF4150 Only) **5-1**

6 Copying **6-1**
Scan Settings **6-3**
Image Quality 6-3
Density 6-4
Zoom Ratio 6-6

7 Printing **7-1**

8 Scanning **8-1**

9 PC Faxing (MF4140/MF4150 Only) **9-1**

10 Maintenance 10-1

Cleaning the Machine 10-1

Exterior 10-1
Interior 10-2
Fuser Roller 10-4
Scanning area 10-5

Replacing the Toner Cartridge 10-8

Redistributing Toner 10-8
Replacing the Toner Cartridge with a New One 10-10

Transporting the Machine 10-12

11 Troubleshooting 11-1

Clearing Jams 11-1

Document Jams (MF4150 Only) 11-1
Paper Jams 11-3

LCD Messages 11-9

Common 11-9
Facsimile (MF4140/MF4150 Only) 11-16
Printer 11-19

Error Codes (MF4140/MF4150 Only) 11-20

If You Cannot Solve a Problem 11-22

12 Machine Settings 12-1

Machine Settings 12-1

Printing User's Data List (MF4140/MF4150 Only) 12-1
Accessing the Setting Menu 12-3

Setting Menu 12-5

PAPER SETTINGS 12-5
COMMON SETTINGS 12-5
COPY SETTINGS 12-6
TIMER SETTINGS 12-7
FAX SETTINGS (MF4140/MF4150 Only) 12-8
BROADCAST (MF4140/MF4150 Only) 12-12
ADDRESS BOOK SET. (MF4140/MF4150 Only) 12-13
ADJUST./CLEANING 12-14
REPORT SETTINGS (MF4140/MF4150 Only) 12-15

13 Appendix 13-1

Specifications 13-1

General 13-1
Copier 13-3
Printer 13-4
Facsimile (MF4140/MF4150 Only) 13-4
Telephone (MF4140/MF4150 Only) 13-5

Index 13-6

How to Use This Guide

Symbols Used in This Manual

The following symbols are used throughout the manuals for the machine and indicate the warnings, cautions and notes you should keep in mind when using the machine.

WARNING	Indicates a warning that may lead to death or serious injury if not observed.
CAUTION	Explains how to avoid actions that could injure you or damage your machine.
NOTE	Explains operating restrictions and how to avoid minor difficulties.

In addition, this guide uses distinctive notations to identify keys and information in the LCD:

– The keys you press appear in square brackets: [Stop/Reset].

– Information in the LCD appears in angle brackets: <LOAD PAPER>.

The numbers that point to the keys on the operation panel diagram correspond to the order of steps to take in the procedure.

Illustrations Used in This Manual

Unless otherwise mentioned, illustrations used in this manual are those taken when no optional equipment is attached to the MF4150.

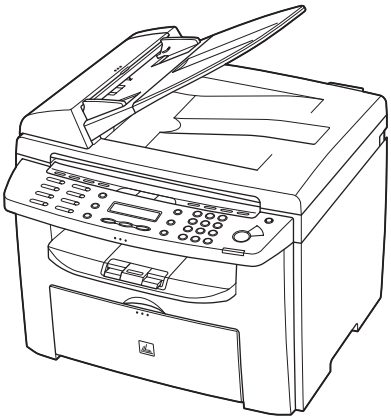

The model MF4150 is used for illustration purposes in this manual.
When there is any difference among MF4122, MF4140, MF4150, it is clearly indicated in the text, e.g., “MF4150 Only.”

Legal Notices

Trademarks

Canon, the Canon logo, and imageCLASS are trademarks of Canon Inc.
All other product and brand names are registered trademarks, trademarks or service marks of their respective owners.

Copyright

Copyright © 2006 by Canon Inc. All rights reserved. No part of this publication may be reproduced, transmitted, transcribed, stored in a retrieval system, or translated into any language or computer language in any form or by any means, electronic, mechanical, magnetic, optical, chemical, manual, or otherwise, without the prior written permission of Canon Inc.

Disclaimers

The information in this document is subject to change without notice.
CANON INC. MAKES NO WARRANTY OF ANY KIND WITH REGARD TO THIS MATERIAL, EITHER EXPRESS OR IMPLIED, EXCEPT AS PROVIDED HEREIN, INCLUDING WITHOUT LIMITATION, THEREOF, WARRANTIES AS TO MARKETABILITY, MERCHANTABILITY, FITNESS FOR A PARTICULAR PURPOSE OF USE OR NON-INFRINGEMENT. CANON INC. SHALL NOT BE LIABLE FOR ANY DIRECT, INCIDENTAL, OR CONSEQUENTIAL DAMAGES OF ANY NATURE, OR LOSSES OR EXPENSES RESULTING FROM THE USE OF THIS MATERIAL.

Users in New Zealand

Caution (New Zealand Only)

This equipment does not fully meet Telecom's impedance requirements. Performance limitations may occur when used in conjunction with some parts of the network. Telecom will accept no responsibility should difficulties arise in such circumstances.

1 Before Using the Machine

Machine Components

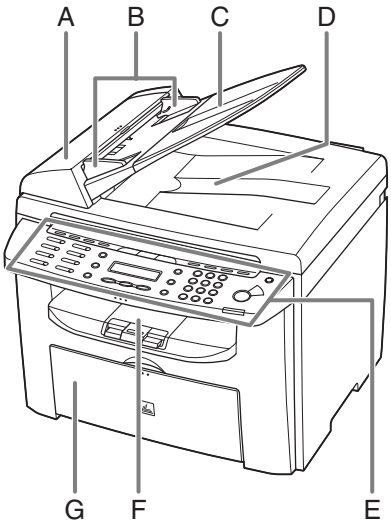

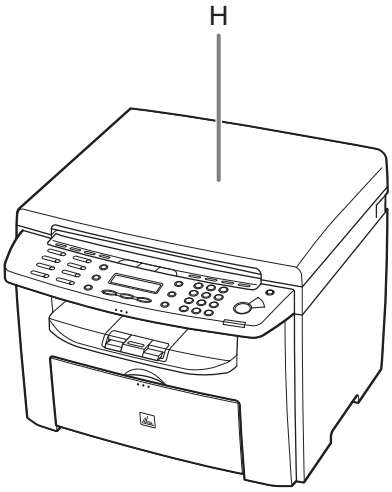

A ADF (Automatic Document Feeder)*
Holds documents and feeds them automatically into the scanning area.
* MF4150 Only

B Slide guides
Adjust to the width of the document.

C Document feeder tray
Holds documents.

D Document delivery tray
Receives documents.

E Operation panel
Controls the machine.

F Output tray
Receives copies, prints and faxes.

G Paper feeding tray
Loads the paper supply.

H Platen glass cover*
Open this cover when placing a document on the platen glass.
* MF4122/MF4140 Only

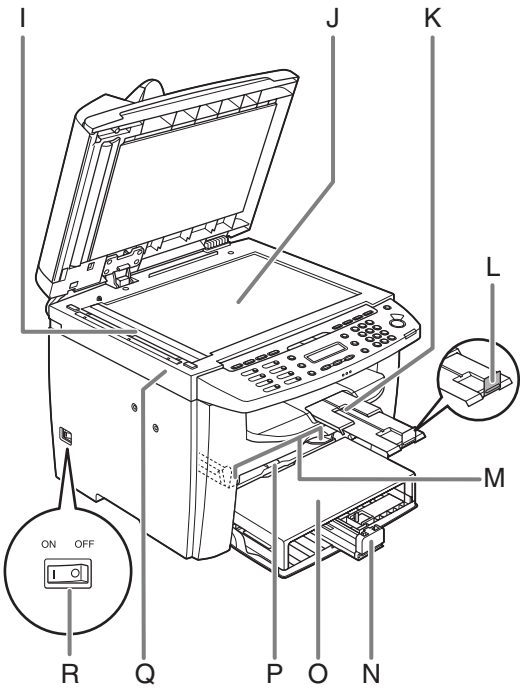

I Scanning area
Scans documents from the ADF.

J Platen glass
Place documents.

K Output tray extension
Extension for the output tray.

L Paper stopper
Prevents the paper from falling off the output tray.
Open the paper stopper from its original position for A4 paper.

M Slide guides for multi-purpose tray
Adjusts to the width of the paper.

N Paper guide rail
Holds the paper supply.

O Dust cover
Protects the paper supply in the paper feeding tray from the dirt and dust.

P Multi-purpose tray
Feeds paper when you insert one by one manually.

Q Scanning platform
open this platform when replacing the toner cartridge or clearing paper jams.

R Main power switch
Turn the power on or off.

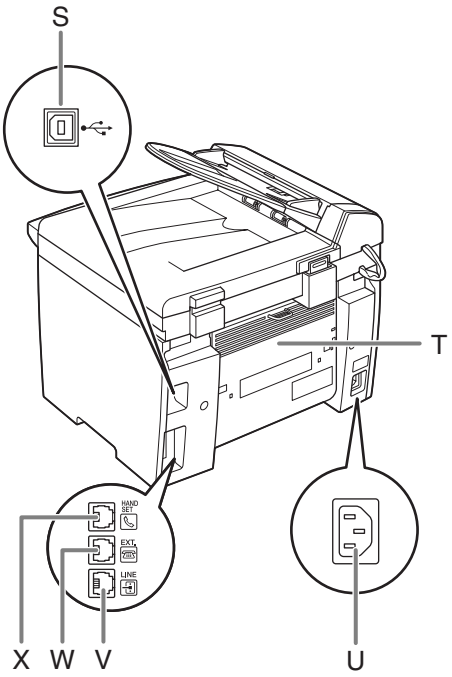

S USB port
Connect the USB (Universal Serial Bus) cable.

T Rear cover
Open this cover when clearing paper jams.

U Power socket
Connect the power cord.

V Telephone line jack*
Connect the external telephone cable.

W External device jack*
Connect the external device.

X Handset jack*
Connect an optional handset cable.

*MF4140/MF4150 Only

Operation Panel

Main Operation Panel

● MF4140/MF4150

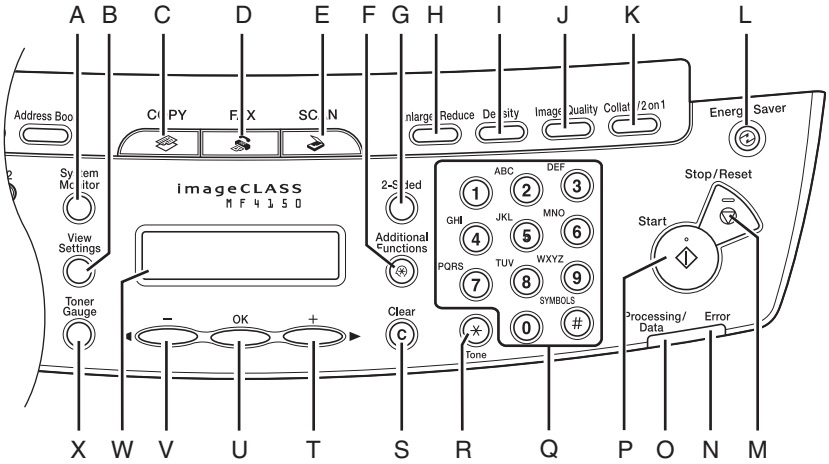

A [System Monitor] key
Press to check print status, fax status, print and scan counts, remaining memory, or print transmission/reception results.

B [View Settings] key
Press to confirm settings of the copy function.

C [COPY] key
Press to switch to the Copy mode.

D [FAX] key
Press to switch to the Fax mode.

E [SCAN] key
Press to switch to the Scan mode.

F [Additional Functions] key
Press to select or cancel the modes in Additional Functions.

G [2-Sided] key
Press to set two-sided copying.

H [Enlarge/Reduce] key
Press to enlarge or reduce copy ratio.

I [Density] key
Press to adjust copy or fax density.

J [Image Quality] key
Press to select image quality for copy or fax.

K [Collate/2 on 1] key
Press to collate copies, or press to set 2 on 1 copying.

L [Energy Saver] key
Press to set or cancel the Sleep mode manually. The key lights green when the Sleep mode is set, and goes off when the mode is canceled.

M [Stop/Reset] key
Press to stop a current job. Also, press to return the machine to the standby mode.

N Error indicator
Flashes when an error has occurred.

O Processing/Data indicator
Flashes during sending or receiving faxes. Lights when the machine has waiting jobs and stores the data in memory.

P [Start] key
Press to start copying, scanning and sending faxes.

Q Numeric keys
Enter letters and numbers.

R [Tone] key
Press to switch from rotary pulse to tone dialing.

S [Clear] key
Press to clear entered alphanumeric characters.

T [+►] key
Press to increase the value for various settings. Also press to see the next item in the menu.

U [OK] key
Press to accept a set function or mode.

V [◄–] key
Press to decrease the value for various settings. Also press to see the previous item in the menu.

W LCD display
Displays messages and prompts during operation. Displays selection, text, and numbers when adjusting the settings.

X [Toner Gauge] key
Press to check the toner remaining in the toner cartridge.

● MF4122

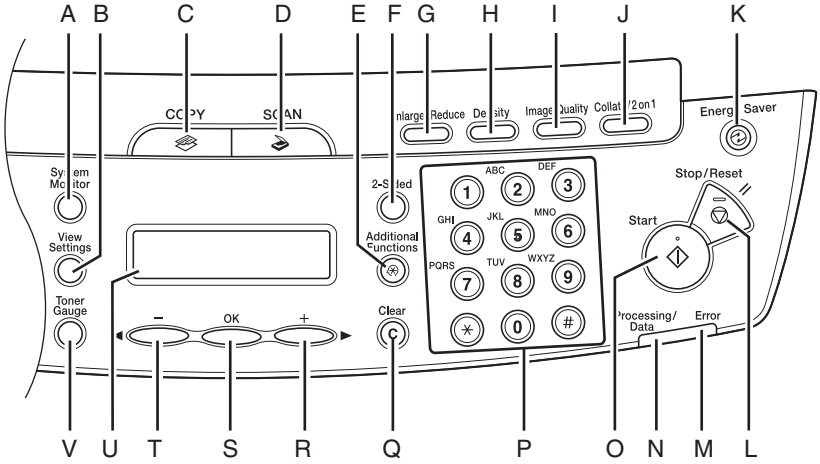

A [System Monitor] key
Press to check print status, print and scan counts.

B [View Settings] key
Press to confirm settings of the copy function.

C [COPY] key
Press to switch to the Copy mode.

D [SCAN] key
Press to switch to the Scan mode.

E [Additional Functions] key
Press to select or cancel the modes in Additional Functions.

F [2-Sided] key
Press to set two-sided copying.

G [Enlarge/Reduce] key
Press to enlarge or reduce copy ratio.

H [Density] key
Press to adjust copy.

I [Image Quality] key
Press to select image quality for copy.

J [Collate/2 on 1] key
Press to collate copies, or press to set 2 on 1 copying.

K [Energy Saver] key
Press to set or cancel the Sleep mode manually. The key lights green when the Sleep mode is set, and goes off when the mode is canceled.

L [Stop/Reset] key
Press to stop a current job. Also, press to return the machine to the standby mode.

M Error indicator
Flashes when an error has occurred.

N Processing/Data indicator
Lights when the machine has waiting jobs.

O [Start] key
Press to start copying and scanning.

P Numeric keys
Enter numbers.

Q [Clear] key
Press to clear entered alphanumeric characters.

R [+►] key
Press to increase the value for various settings. Also press to see the next item in the menu.

S [OK] key
Press to accept a set function or mode.

T [◄–] key
Press to decrease the value for various settings. Also press to see the previous item in the menu.

U LCD display
Displays messages and prompts during operation. Displays selection, text, and numbers when adjusting the settings.

V [Toner Gauge] key
Press to check the toner remaining in the toner cartridge.

Facsimile Operation Panel (MF4140/MF4150 Only)

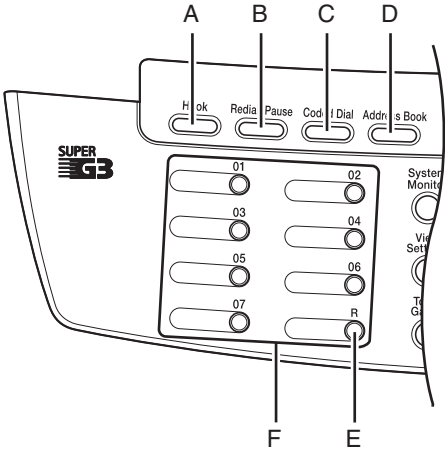

A [Hook] key
Press when you want to dial without lifting up the optional handset or the handset of the external telephone.

B [Redial/Pause] key
Press to redial the last dialed number when fax is standing by, or press to insert a pause when entering a fax number.

C [Coded Dial] key
Press to perform coded dialing.

D [Address Book] key
Press to search pre-registered destinations under one-touch speed dialing keys or coded dialing numbers by name.

E [R] key
Press to dial an outside line access number or an extension number when the unit is connected through a switchboard (PBX).

F One-Touch Speed Dial keys
Press to use one-touch speed dialing (Pre-registered frequently used numbers or group dialing).

LCD (Standby Mode)

Fax Mode (MF4140/MF4150 Only)

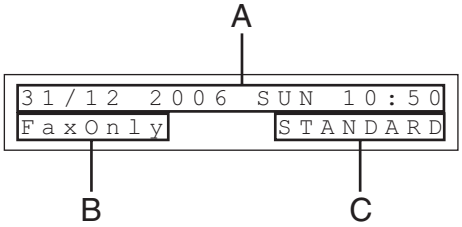

A Date & Time

B Receive mode

C Image quality

Copy Mode

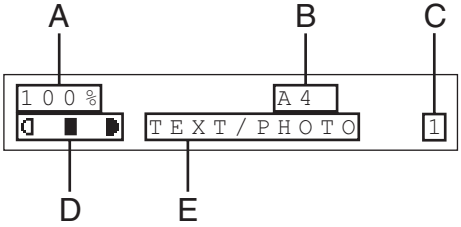

A Zoom ratio

B Paper size

C Quantity

D Density

E Image quality

Scan Mode

NOTE

– Depending on your needs, you can change the standby display which appears when the main power switch is turned on. For details, see “Setting Menu,” on p. 12-5.

– When the main power switch is turned on, the LCD displays <PLEASE WAIT> first, and then displays <INITIALIZING...> until the standby display appears. It is also possible to see the standby display without having <INITIALIZING...> shown.

– If the machine remains idle for one minute, the display returns to the standby mode (Auto Clear Function).

Optional Handset (MF4140/MF4150 Only)

If you want to use the machine as a telephone and a fax machine, or if you want to receive faxes manually, install the optional handset available from your local authorized Canon dealer or the Canon help line.

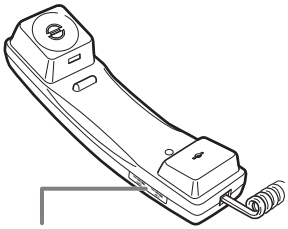

Use a sharp object (i.e., pen) to select the ring volume of the handset.

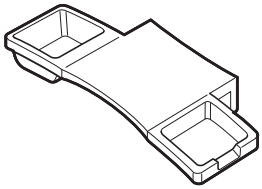

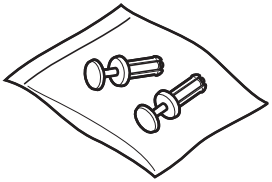

NOTE

For how to install the handset, see “Connect Telephone Cables and Install Handset,” in the Starter Guide.

Maintaining the Handset

– Do not leave the handset exposed to direct sunlight.
– Do not install the handset in hot or humid conditions.
– Do not spray aerosol polish on the handset as it may cause damage.
– Use a damp cloth to wipe clean the handset.

Toner Cartridge

The lifetime of the Canon genuine starter toner cartridge included in this machine is approximately 1,000 pages, the Canon genuine replacement toner cartridge is approximately 2,000 pages. The page counts are on the basis of "ISO/ IEC 19752"* when printing A4 size paper with the default print density setting. The level of toner consumption varies depending on the type of documents printed. If your average document contains a lot of graphics, tables, or charts, the life of the toner cartridge will be shorter as they consume more toner. To purchase the Canon genuine replacement toner cartridge, contact your local authorized Canon dealer or Canon help line.

* "ISO/IEC 19752" is the global standard related to "Method for the determination of toner cartridge yield for monochromatic electrophotographic printers and multi-function devices that may contain printer components" issued by ISO (International Organization for Standardization).

Toner Cartridge name:
Canon FX9 Cartridge

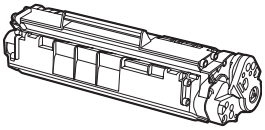

Model Name	Type	Supported Canon Genuine Cartridge	Print Yield
MF4122 MF4140 MF4150	Bundled	Canon FX9 S-Cartridge	Approx. 1,000 pages
	Replacement	Canon FX9 Cartridge	Approx. 2,000 pages

Maintaining the Toner Cartridge

- Keep the toner cartridge away from computer screens, disk drives, and floppy disks. The magnet inside the toner cartridge may harm these items.
- Avoid locations subject to high temperature, high humidity, or rapid changes in temperature.
- Do not expose the toner cartridge to direct sunlight or bright light for more than five minutes.
- Store the toner cartridge in its protective bag. Do not open the bag until you are ready to install the toner cartridge in the machine.
- Save the toner cartridge's protective bag in case you need to repack and transport the toner cartridge at a later date.
- Do not store the toner cartridge in a salty atmosphere or where there are corrosive gases such as from aerosol sprays.
- Do not remove the toner cartridge from the machine unnecessarily.
- Do not open the drum protective shutter on the toner cartridge. Print quality may deteriorate if the drum surface is exposed to light or is damaged.
- Always hold the toner cartridge by its handle to avoid touching the drum protective shutter.
- Do not stand the toner cartridge on end, and do not turn it upside down. If toner becomes caked in the toner cartridge, it may become impossible to free it even by shaking the toner cartridge.

CAUTION

Do not place the toner cartridge in fire. Toner powder is flammable.

Checking the toner level

You can check the amount of toner remaining in the toner cartridge by pressing the [Toner Gauge] key. The toner level is displayed in the LCD at four levels.
If the toner gauge indicates that the toner is empty, it is recommended that the toner cartridge be replaced.(See “Replacing the Toner Cartridge,” on p. 10-8.)

Toner full

```
TONER GAUGE
0%          ■■■        100%
```

Toner high

```
TONER GAUGE
0%          ■■□        100%
```

Toner low

```
TONER GAUGE
0%          ■□□        100%
```

Toner empty

```
TONER GAUGE
0%          □□□        100%
```

NOTE

To return to the standby mode, press [Stop/Reset].

Timer Settings

Setting the Sleep Mode

When the machine remains idle for a certain period of time, it automatically enters the Sleep mode.

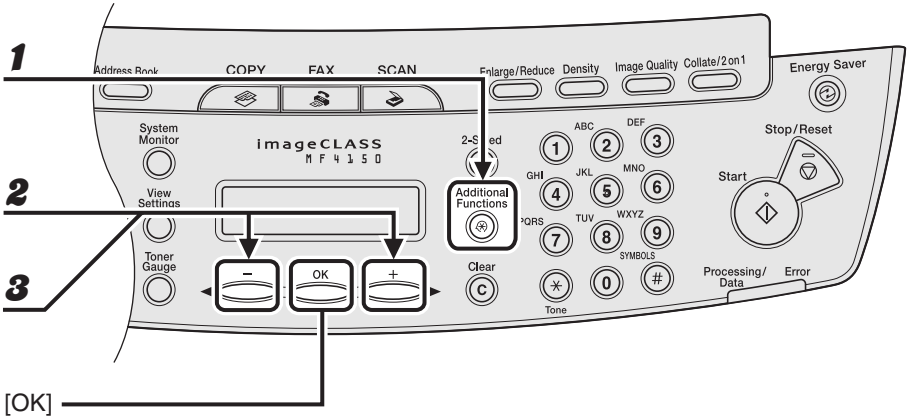

1 **Press [Additional Functions].**

2 **Press [◄ –] or [+ ►] to select <TIMER SETTINGS>, then press [OK].**

3 **Press [◄ –] or [+ ►] to select <AUTO SLEEP>, then press [OK].**

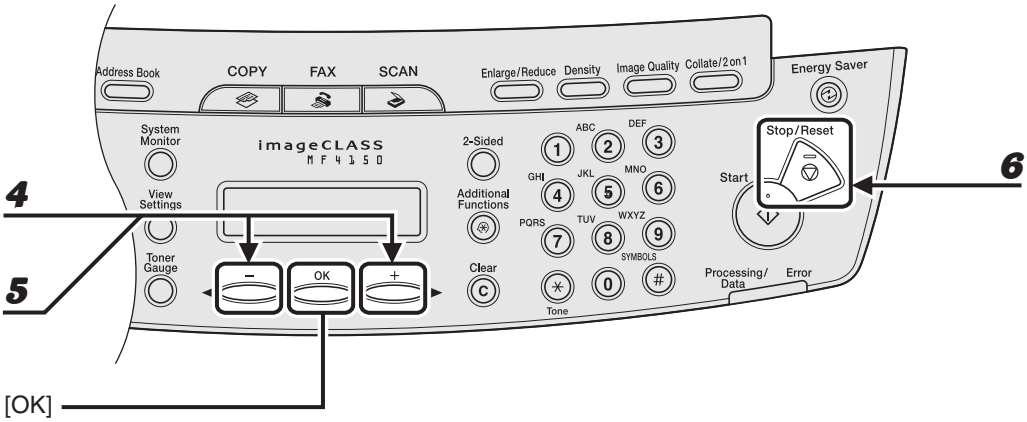

4 **Press [◄ –] or [+ ►] to select <ON>, then press [OK].**

5 **Press [◄ –] or [+ ►] to select the desired interval, then press [OK].**

You can set the interval from 3 to 30 minutes (in one-minute increments).
You can also enter values with the numeric keys.

6 **Press [Stop/Reset] to return to the standby mode.**

NOTE

– To resume the normal mode from the Sleep mode, press [Energy Saver] on the operation panel.
– To enter the Sleep mode manually, press [Energy Saver] on the operation panel.
– The machine will not enter the Sleep mode when:
  - the machine is in operation
  - the Processing/Data indicator lights or flashes
  - an error code or message appears on the display and the Error indicator flashes
  - no paper is loaded in the paper feeding tray
  - paper is loaded in the multi-purpose tray
  - a paper jam occurs in the machine
– The machine will leave the Sleep mode when:
  - you press [Energy Saver] on the operation panel
  - a fax is received
  - the optional handset or the handset of the external telephone is off the hook
  - a print job is sent from a computer, and the print is started

Setting Daylight Saving Time (MF4140/MF4150 Only)

In some countries or areas, time is advanced throughout the summer season. This is called “Daylight Saving Time.”

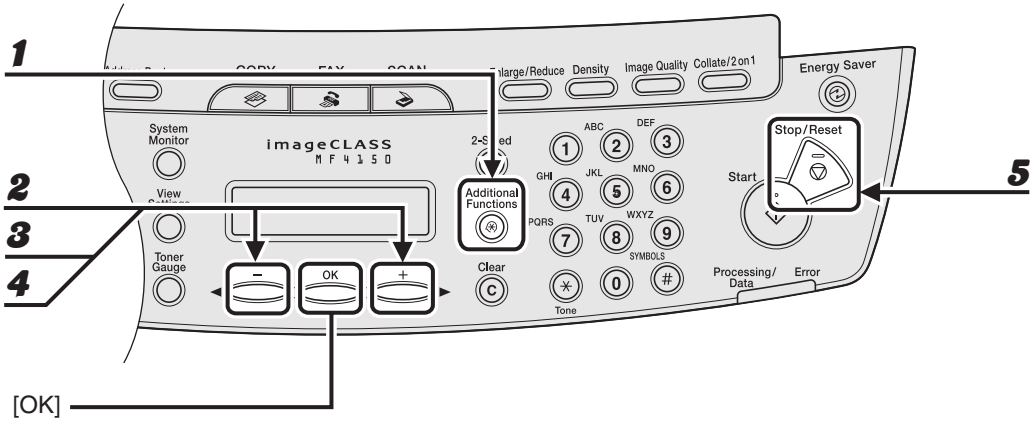

1 **Press [Additional Functions].**

2 **Press [◄ –] or [+ ►] to select <TIMER SETTINGS>, then press [OK].**

3 **Press [◄ –] or [+ ►] to select <DAYLIGHT SV.TIME>, then press [OK].**

4 **Press [◄ –] or [+ ►] to select <ON>, then press [OK].**

5 **Press [Stop/Reset] to return to the standby mode.**

2 Document Handling

Document Requirements

	Platen Glass	ADF (MF4150 Only)
Type	– Plain paper – Thick documents – Photographs – Small documents (e.g., index cards) – Special types of paper (e.g., tracing paper*1, transparencies*1, etc.) – Book (Height: max. 24 mm)	Plain paper (Multipage documents of the same size, thickness and weight or one page documents.)
Size (W x L)	Max. 216 × 296 mm	Max. 216 × 356 mm Min. 105 × 148.5 mm
Weight	Max. 2 kg	40 to 105 g/m^2
Quantity	1 sheet	Max. 35 sheets*2

*1 When copying a transparent document such as tracing paper or transparencies, use a piece of plain white paper to cover the document after placing it face-down on the platen glass.
*2 80 g/m^2 paper

- Do not place the document on the platen glass or in the ADF until the glue, ink or correction fluid on the document is completely dry.
- Remove all fasteners (staples, paper clips, etc.) before loading the document in the ADF.
- To prevent document jams in the ADF, do not use any of the following:
  - Wrinkled or creased paper
  - Carbon paper or carbon-backed paper
  - Curled or rolled paper
  - Coated paper
  - Torn paper
  - Onion skin or thin paper
  - Documents with staples or paper clips attached
  - Paper printed with a thermal transfer printer
  - Transparencies

Scanning Area

Make sure your document's text and graphics fall within the shaded area in the following diagram. Note that the margin widths listed are approximate and there may be slight variations in actual use.

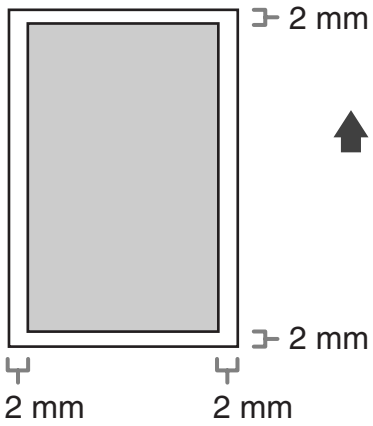

Loading Documents

On the Platen Glass

1 **Lift up the ADF/platen glass cover.**

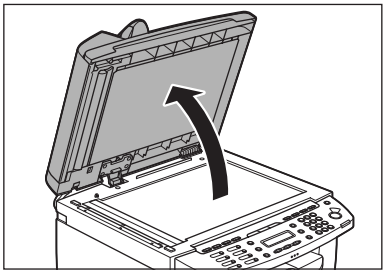

2 **Place your document face down.**

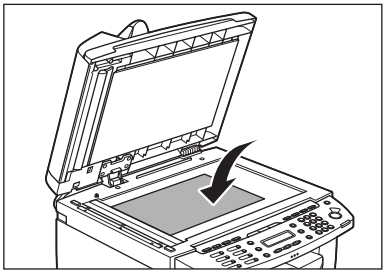

3 Align the document with the appropriate paper size marks.

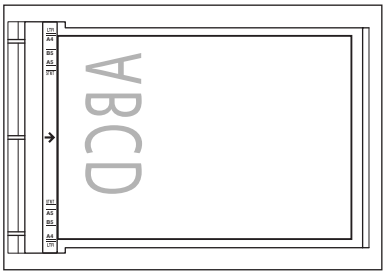

If your document does not match any of the paper size marks, align the center of your document with the arrow mark.

4 Gently close the ADF/platen glass cover.

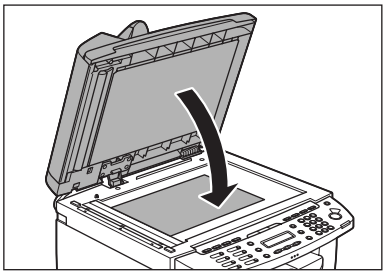

The document is ready for scanning.

CAUTION

- **When closing the ADF/platen glass cover, be careful not to get your fingers caught, as this may result in personal injury.**
- **Do not press down the ADF/platen glass cover forcefully, as this may damage the platen glass and cause personal injury.**

NOTE

Remove the document from the platen glass when scanning is complete.

In the ADF (MF4150 Only)

1 **Fan the document stack and even the edges.**

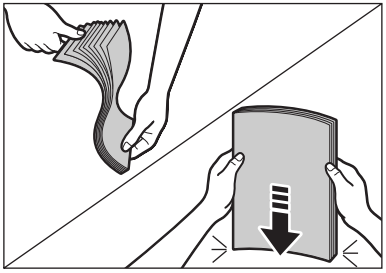

2 **Adjust the slide guides to the width of the documents.**

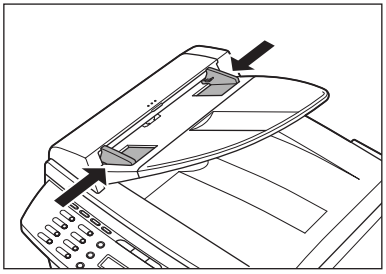

3 Neatly place the documents face up in the document feeder tray.

When enlarging A5 or B5 originals to A4 paper, place your originals horizontally.

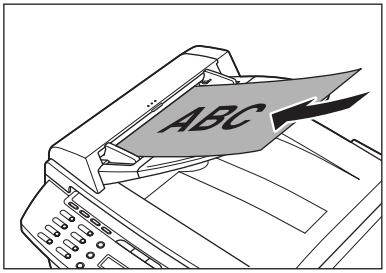

The document is ready for scanning.

NOTE

– Do not add or remove documents while they are being scanned.
– When scanning is complete, remove the documents from the document delivery tray to avoid paper jams.
– Avoid using ADF to scan the same document more than 30 times. When scanned repeatedly, documents can become folded or torn, which may cause paper jams.
– If the feeder rollers are soiled from scanning a document written in pencil, clean them. (See “Cleaning the Machine,” on p. 10-1.)

3 Print Media

Paper Requirements

	Paper feeding tray	Multi-purpose tray
Size (W × L)	A4, B5, A5, Executive, Envelope (COM10, Monarch, DL, ISO-C5), Oficio, Brazil-Oficio, Mexico-Oficio, Folio, Government-LTR, Government-LGL, Foolscap, LTR, LGL (76 × 127 to 216 × 356 mm)	
Weight	60 to 163 g/m^2	
Quantity	Max. 250 sheets (Height: max. 25 mm)	Max. 1 sheet
Type	Plain Paper, Plain Paper L, Heavy Paper, Heavy Paper H, Transparency	

NOTE

The default paper size is A4. If you use a different paper size, you must change the paper size settings. (See “Setting Paper Size and Type,” on p. 3-7.)

Printable Area

The shaded area indicates the approximate printable area of A4 paper and envelope. Note that the margin widths listed are approximate and there may be slight variations in actual use.

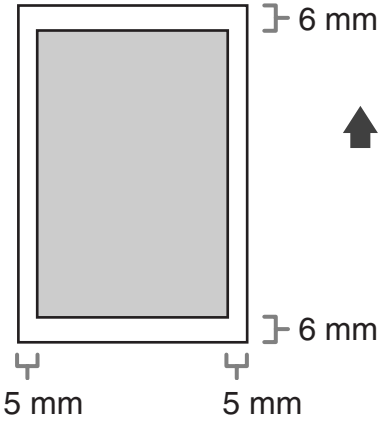

Paper Guidelines

- To prevent paper jams, do not use any of the following:
  - Wrinkled or creased paper
  - Curled or rolled paper
  - Coated paper
  - Torn paper
  - Damp paper
  - Very thin paper
  - Paper which has been printed on using a thermal transfer printer (Do not copy on the reverse side.)
- The following types of paper do not print well:
  - Highly textured paper
  - Very smooth paper
  - Shiny paper
- Make sure the paper is free from dust, lint, and oil stains.
- Be sure to test paper before purchasing large quantities.
- Store all paper wrapped and on a flat surface until ready for use. Keep opened packs in their original packaging in a cool, dry location.
- Store paper at 18°C-24°C, 40%-60% relative humidity.
- Use only the transparencies designed for laser printers. Canon recommends you to use Canon type transparencies with this machine.

Loading Paper

To load paper in the paper feeding tray, see “Set Up the Paper Trays and Load Paper,” in the Starter Guide.

Into the Multi-Purpose tray

Use the multi-purpose tray when you want to copy or print on the different paper which is in the paper feeding tray. Load paper one by one in the multi-purpose tray.

NOTE

– The paper in the multi-purpose tray is fed prior to the paper in the paper feeding tray.
– The recommended envelopes are COM10, MONARCH, DL, and ISO-C5. Using other envelopes may affect the quality of the printout.
– Make sure to set the correct paper size in the printer driver. (See Online Help.)
– When printing received documents, it is possible to feed paper only from the paper feeding tray. If paper is loaded into the multi-purpose tray, <REMOVE MP PAPER> appears.

1 **Spread the paper guides a little wider than the actual paper width.**

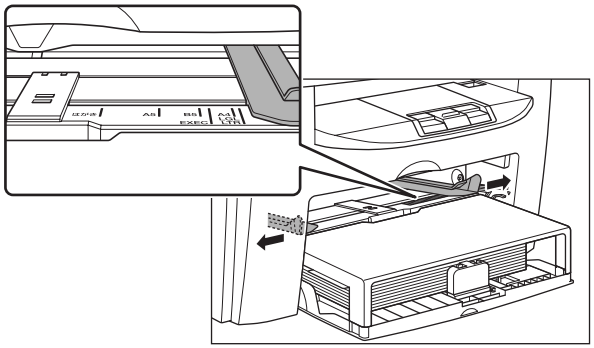

2 **When setting a paper, gently insert the paper into the multi-purpose tray with the print side up.**

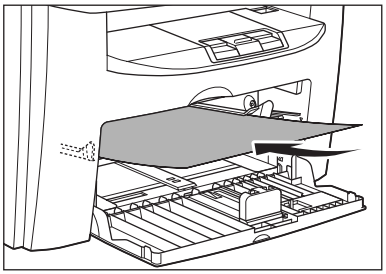

NOTE

When you load paper with a logo on, position the paper with the print side up (logo side) and insert it so that the top of the paper feeds first in the multi-purpose tray.

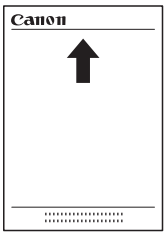

When setting an envelope, gently insert the envelope into the multi-purpose tray with the print side up and the right edge (i.e., closer to the stamp) first.

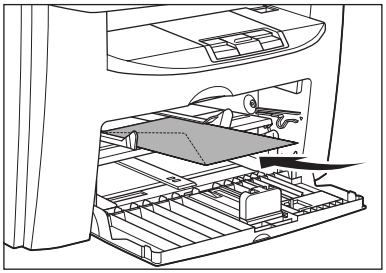

3 Slide the paper guides so that they fit to both sides of the paper.

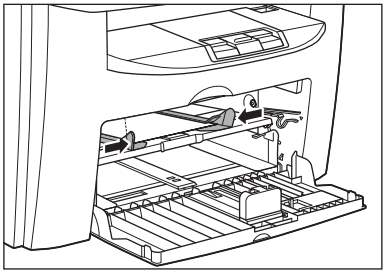

NOTE

If the paper guides are not adjusted correctly for the size of the paper, the quality of your printouts may be adversely affected.

4 Specify the size and the type of the paper you load.

For details on how to specify the paper size and type, see “Setting Paper Size and Type,” on p. 3-7.

Setting Paper Size and Type

The default setting is <A4> and <PLAIN PAPER>. When you place other sizes and/or types of paper, follow this procedure to change the settings.
The procedure is same for the paper feeding tray and multi-purpose tray except for selecting the paper feeding tray or multi-purpose tray in step 3 and 6.

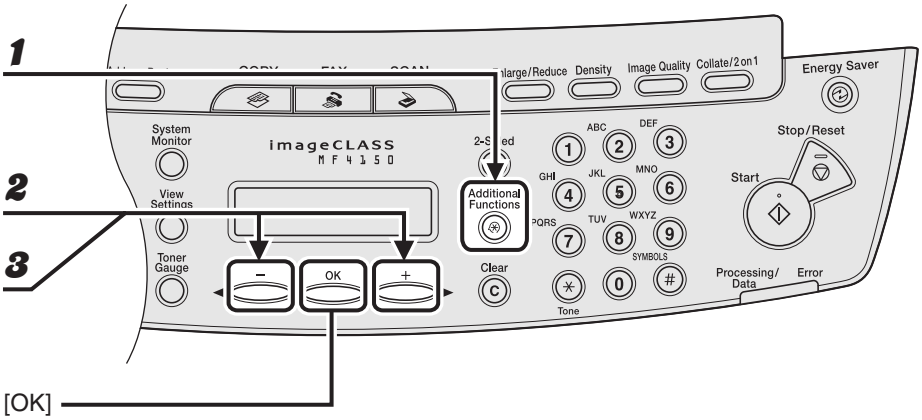

1 **Press [Additional Functions].**

2 **Press [◄ –] or [+ ►] to select <PAPER SETTINGS>, then press [OK].**

3 **Press [◄ –] or [+ ►] to select <CASSETTE> or <MP TRAY>, then press [OK].**

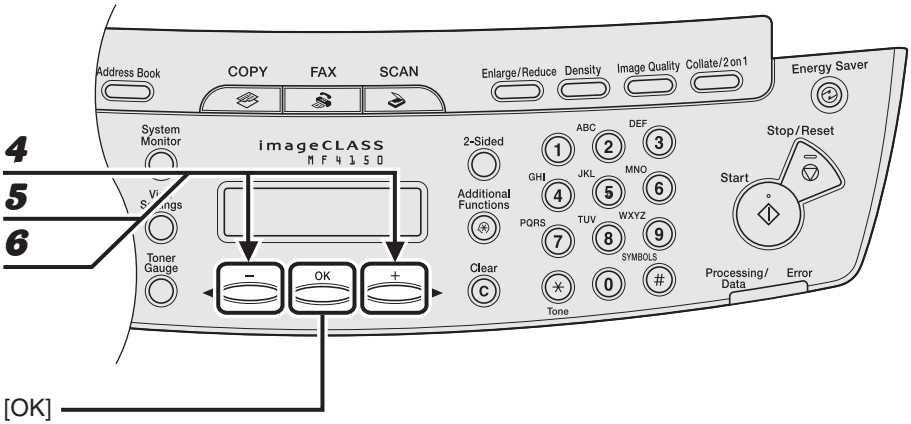

4 **Press [◄ –] or [+ ►] to select <PAPER SIZE>, then press [OK].**

5 **Press [◄ –] or [+ ►] to select the paper size, then press [OK].**

<A4>, <B5>, <A5>, <EXECUTIVE>, <COM10>, <MONARCH>, <DL>, <ISO-C5>, <OFICIO>, <BRAZIL-OFICIO>, <MEXICO-OFICIO>, <FOLIO>, <GOVERNMENT-LETTER>, <GOVERNMENT-LEGAL>, <FOOLSCAP>, <LTR>, <LGL>

NOTE

The paper sizes available will vary depending on the country where the unit was purchased.

6 **Press [◄ –] or [+ ►] to select <CASSETTE> or <MP TRAY>, then press [OK].**

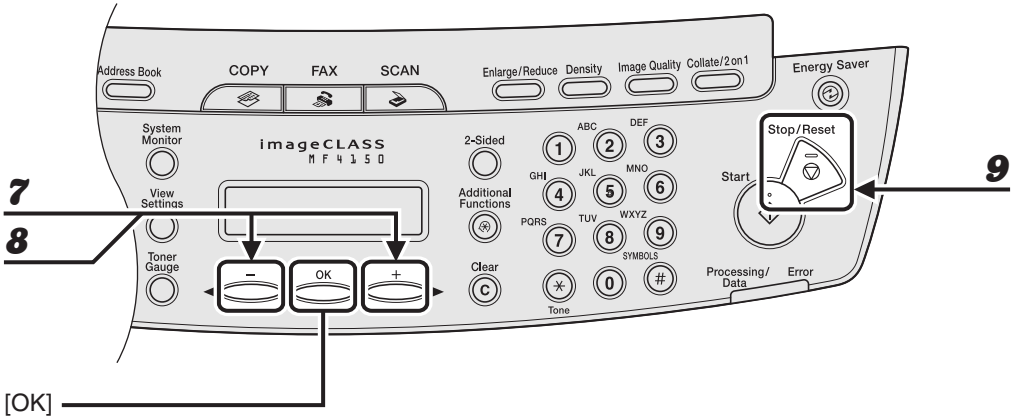

7 Press [◄ –] or [+ ►] to select <PAPER TYPE>, then press [OK].

NOTE

If you select <B5>, <A5>, <EXECUTIVE>, <COM10>, <MONARCH>, <DL> or <ISO-C5> for the paper size in step 5, you cannot select the <PAPER TYPE>. Skip to step 9.

8 Press [◄ –] or [+ ►] to select the paper type, then press [OK].

You can select from the following paper types:
<PLAIN PAPER> or <PLAIN PAPER L>[*1] for Plain paper (64 g/m^2 to 90 g/m^2)
<HEAVY PAPER> or <HEAVY PAPER H>[*2] for Heavy paper (Paper feeding tray: 105 g/m^2 to 128 g/m^2, Multi-purpose tray:105 g/m^2 to 163 g/m^2)
<TRANSPARENCY> for Transparency

[*1] If paper curls excessively when printed with <PLAIN PAPER> selected, select <PLAIN PAPER L>.

[*2] If print fixing is not sufficient when printed with <HEAVY PAPER> selected, select <HEAVY PAPER H>.

9 Press [Stop/Reset] to return to the standby mode.

4 Sending Faxes

(MF4140/MF4150 Only)

Follow this procedure to send a fax.
For advanced sending features, see Chapter 1, “Advanced Fax Features (MF4140/MF4150 Only),” in the Advanced Guide.

1 Set a Document

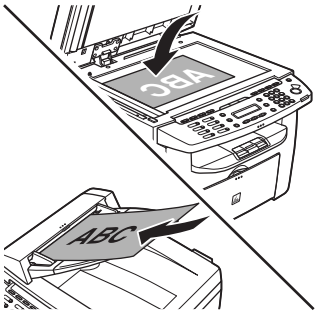

Place the document on the platen glass or load it in the ADF.

For documents you can fax, see “Document Requirements,” on p. 2-1.

2 Enter the Fax Mode

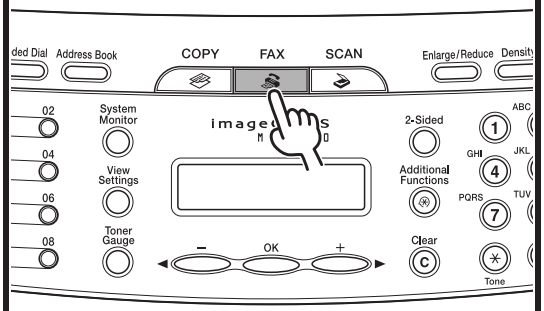

Press [FAX].

The FAX indicator lights and the machine enters the fax standby mode.

What if...

- **You want to adjust the resolution and density:**
  See “Scan Settings,” on p. 4-3.

3 Enter the Fax Number

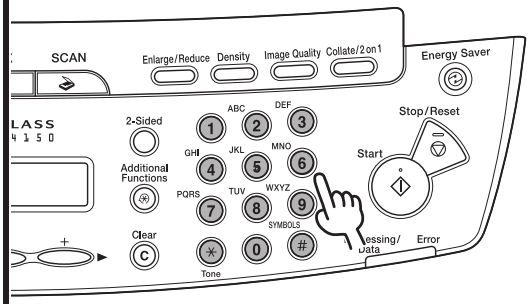

Dial the recipient's fax number with the numeric keys.

Ex.

= 0 1 2 X X X X X X X _

What if...

- **You enter a wrong number:**
  Go back to the wrong digit with [◄], then press [Clear] to delete it. Or press and hold [Clear] to delete the entire entry. Then try again.

4 Send the Document

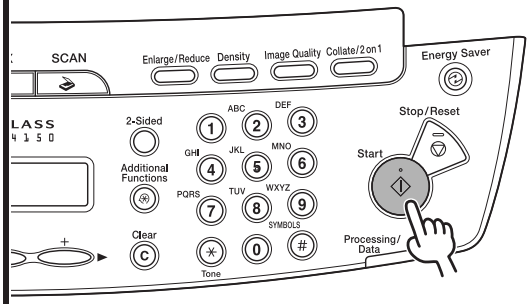

Press [Start].

When you set the document on the platen glass, press [Start] for each document. When scanning is complete, press [OK].
If <CONFIRM NEW DEST.> is set to <ON> in the <TX SETTINGS> of the <FAX SETTINGS> menu, you need to enter the fax number again after pressing [Start].

What if...

- **You press [Stop/Reset] to cancel a job during scanning documents or after scanning documents:**
  The <CANCEL DURING TX/RX?> message appears. Press [◄] to select <Yes>.

Scan Settings

You can adjust the image quality and density of the document you send. The higher image quality you set, the better the output will be, but the longer the transmission will take. Adjust the scan settings according to the type of document you are sending.

Image Quality

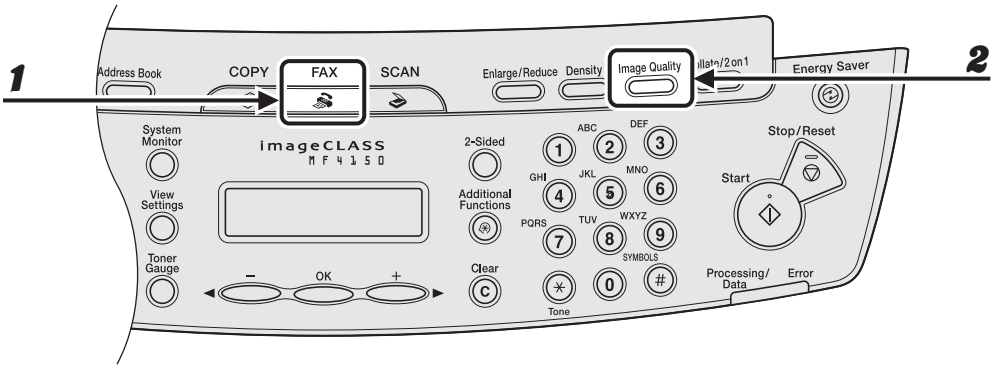

1 **Press [FAX].**

2 **Press [Image Quality].**

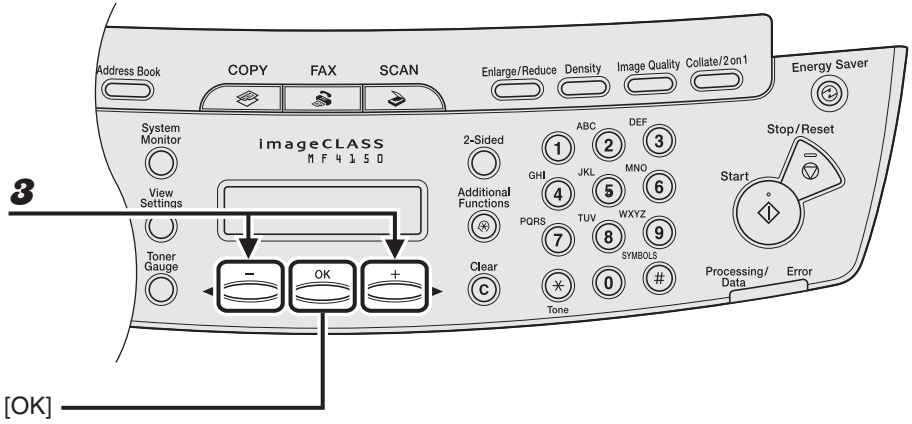

3 Press [◄ –] or [+ ►] to select the resolution, then press [OK].

<STANDARD> for most text-only documents. (200 × 100 dpi)
<FINE> for fine-print documents (the resolution is twice that of <STANDARD>). (200 × 200 dpi)
<PHOTO> for documents that contain photographs (the resolution is twice that of <STANDARD>). (200 × 200 dpi)
<SUPER FINE> for documents that contain fine print and images (the resolution is four times that of <STANDARD>). (200 × 400 dpi)

Density

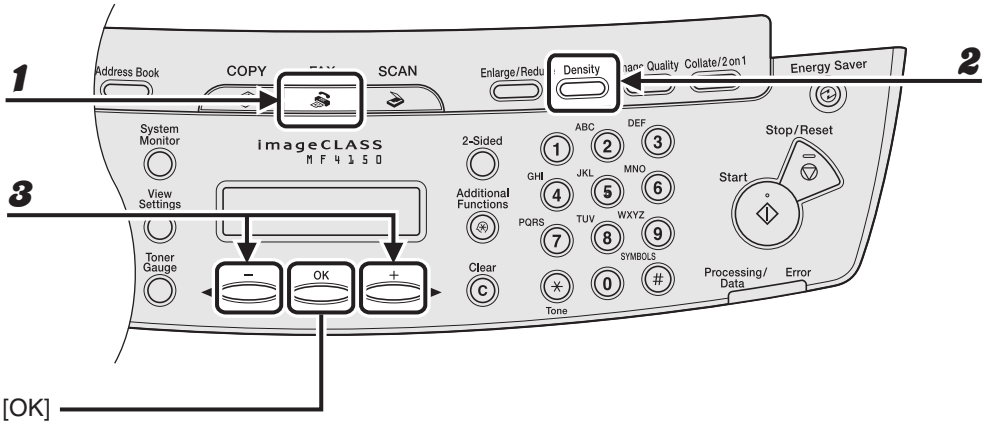

1 **Press [FAX].**

2 **Press [Density].**

Ex.

```
DENSITY
-LT   ◀□□□□□■□□□□□▶   DK+
```

3 **Press [◄ –] or [+ ►] to adjust the density, then press [OK].**

[+ ►]: to make light documents darker
[◄ –]: to make dark documents lighter

Speed Dialing

Speed dialing allows you to dial fax/telephone numbers by simply pressing one or a few keys. The following speed dialing methods are available:

- One-Touch Speed Dialing (p. 4-7)
  - Register a fax/telephone number for one-touch speed dialing, then to dial the number, simply press the one-touch speed dialing key assigned to that number. You can register up to 7 one-touch speed dialing keys, including group dialing.
- Coded Dialing (p. 4-14)
  - Register a fax/telephone number for coded dialing, then to dial the number, simply press [Coded Dial] and enter the two-digit code assigned to that number. You can register up to 100 coded dialing codes.
- Group Dialing (p. 4-21)
  - Register a group of fax numbers (must be registered for one-touch speed dialing and/or coded dialing) for group dialing, then to send a document to all numbers in that group, simply press the one-touch speed dialing key assigned to that group. You can register up to 50 destinations into a one-touch speed dialing key as a group.

Registering Recipients for Speed Dialing

For each recipient, you can register:

– Name

– Fax number (required)

● Registering One-Touch Speed Dialing

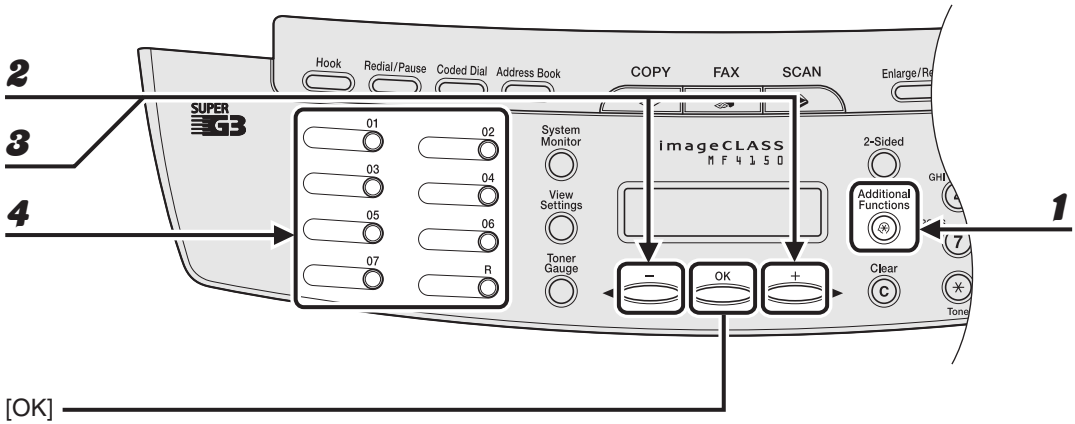

1 **Press [Additional Functions].**

2 **Press [◄ –] or [+ ►] to select <ADDRESS BOOK SET.>, then press [OK].**

3 **Press [◄ –] or [+ ►] to select <1-TOUCH SPD DIAL>, then press [OK].**

4 **Press a one-touch speed dialing key (01 to 07) for which you want to register the fax number, then press [OK].**

You can also select a one-touch speed dialing number with [◄ –] or [+ ►].

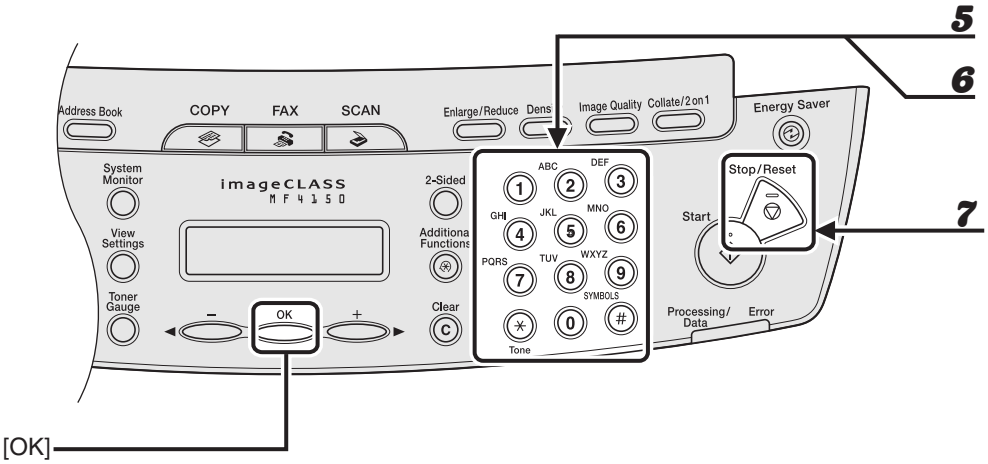

5 **Enter the destination name (max. 20 characters, including spaces) with the numeric keys, then press [OK].**

Ex.

```
NAME                    [A]
CAN
```

6 **Enter the fax number you register (max. 50 digits, including spaces and pauses) with the numeric keys, then press [OK].**

Ex.

```
TEL NUMBER ENTRY
012XXXXXXX_
```

To register another one-touch speed dialing key, repeat the procedure from step 4.

7 **Press [Stop/Reset] to return to the standby mode.**

● Editing One-Touch Speed Dialing

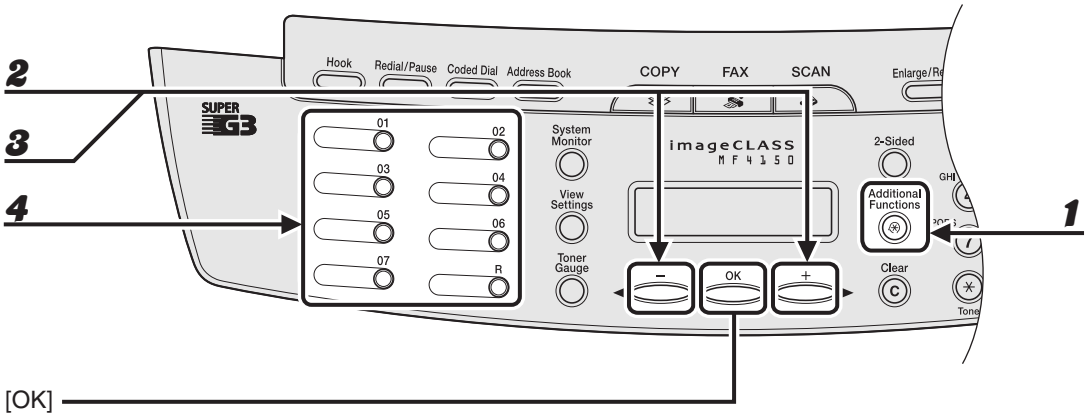

1 **Press [Additional Functions].**

2 **Press [◄ –] or [+ ►] to select <ADDRESS BOOK SET.>, then press [OK].**

3 **Press [◄ –] or [+ ►] to select <1-TOUCH SPD DIAL>, then press [OK].**

4 **Press the one-touch speed dialing key (01 to 07) you want to edit, then press [OK].**

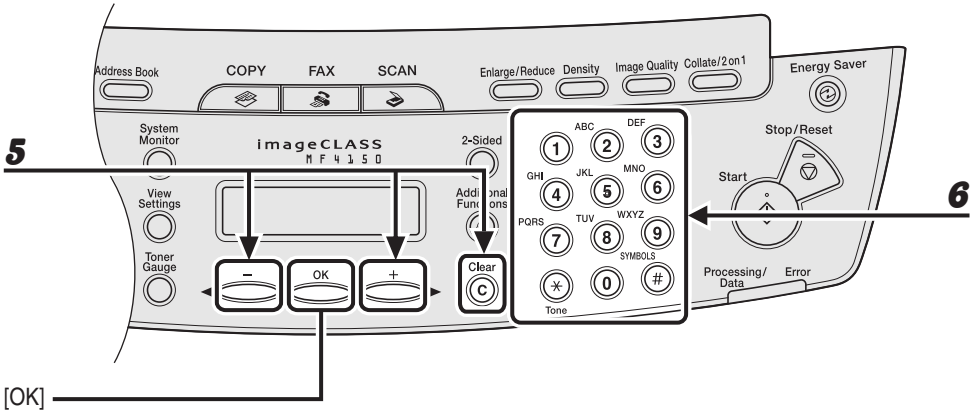

5 **Press [◄ –] or [+ ►] repeatedly to go to the wrong character, then press [Clear] to delete it.**

To delete the entire name, press and hold [Clear].

6 **Enter a new character with the numeric keys, then press [OK].**

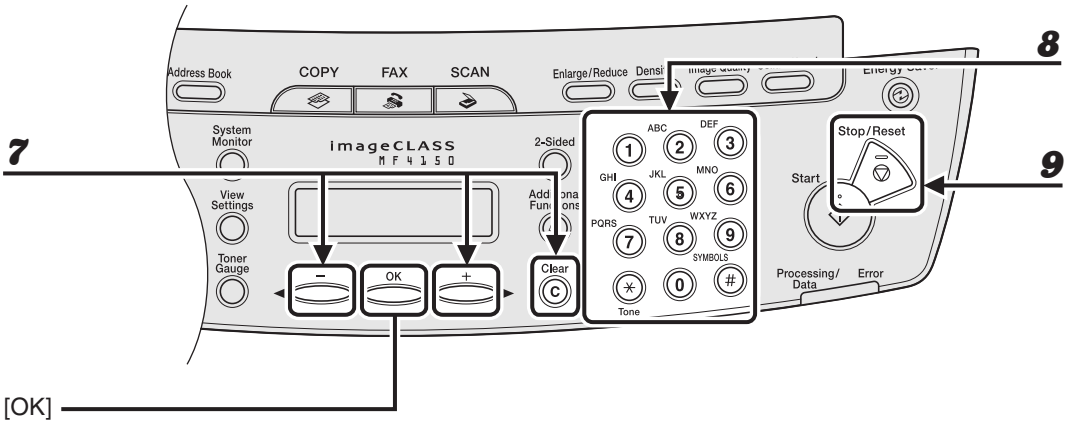

7 **Press [◄ –] or [+ ►] repeatedly to go to the wrong number, then press [Clear] to delete it.**

To delete all numbers, press and hold [Clear].

8 **Enter a new number with the numeric keys, then press [OK].**

9 **Press [Stop/Reset] to return to the standby mode.**

● Deleting One-Touch Speed Dialing

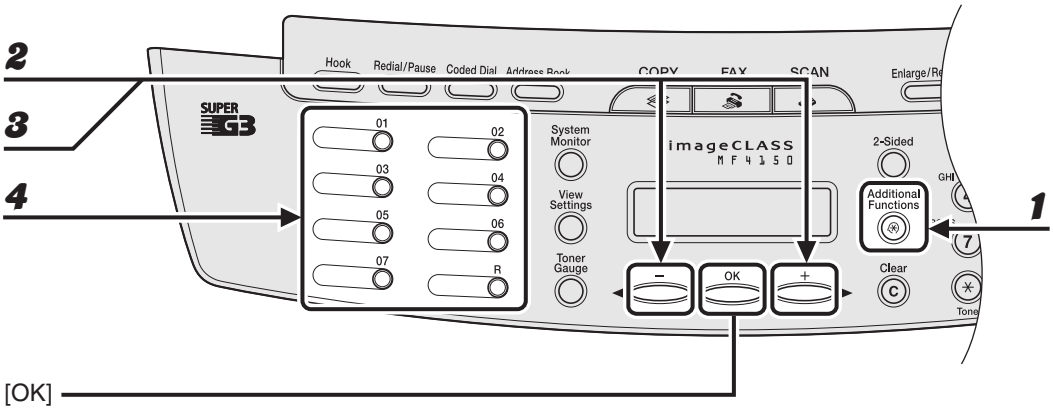

1 Press [Additional Functions].

2 Press [◄ –] or [+ ►] to select <ADDRESS BOOK SET.>, then press [OK].

3 Press [◄ –] or [+ ►] to select <1-TOUCH SPD DIAL>, then press [OK].

4 Press the one-touch speed dialing key (01 to 07) you want to delete, then press [OK].

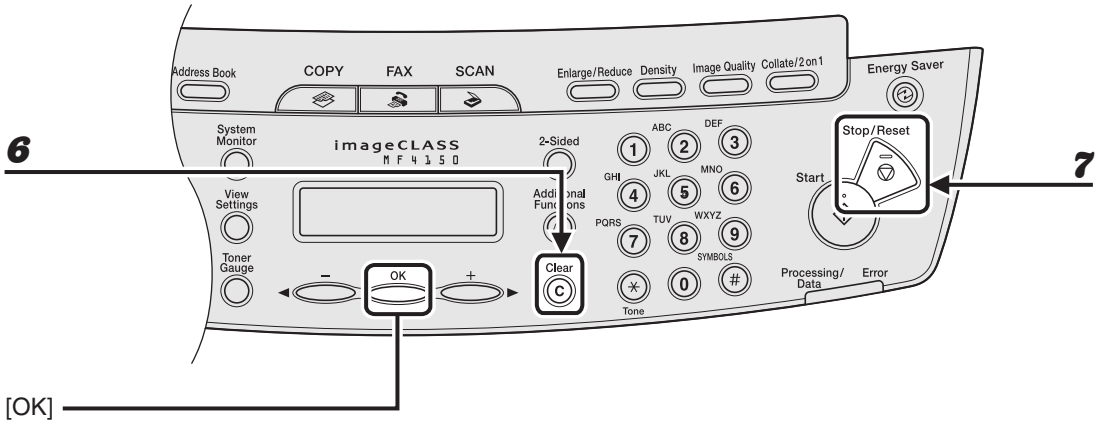

5 **Press [OK].**

6 **Press and hold [Clear] to delete all numbers, then press [OK].**

NOTE

When deleting all numbers, the registered name is cleared automatically.

7 **Press [Stop/Reset] to return to the standby mode.**

● Registering Coded Dialing

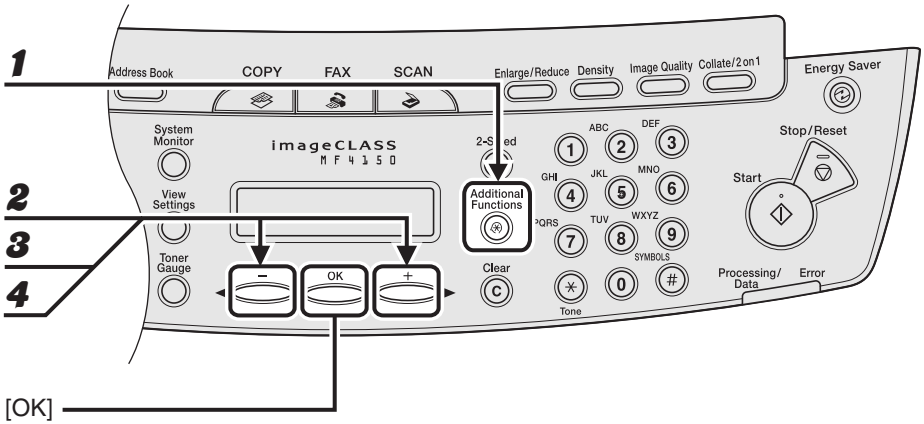

1 **Press [Additional Functions].**

2 **Press [◄ –] or [+ ►] to select <ADDRESS BOOK SET.>, then press [OK].**

3 **Press [◄ –] or [+ ►] to select <CODED DIAL>, then press [OK].**

4 **Press [◄ –] or [+ ►] to select a coded dialing code (00 to 99), then press [OK].**

You can also enter a coded dialing code with the numeric keys after pressing [Coded Dial].

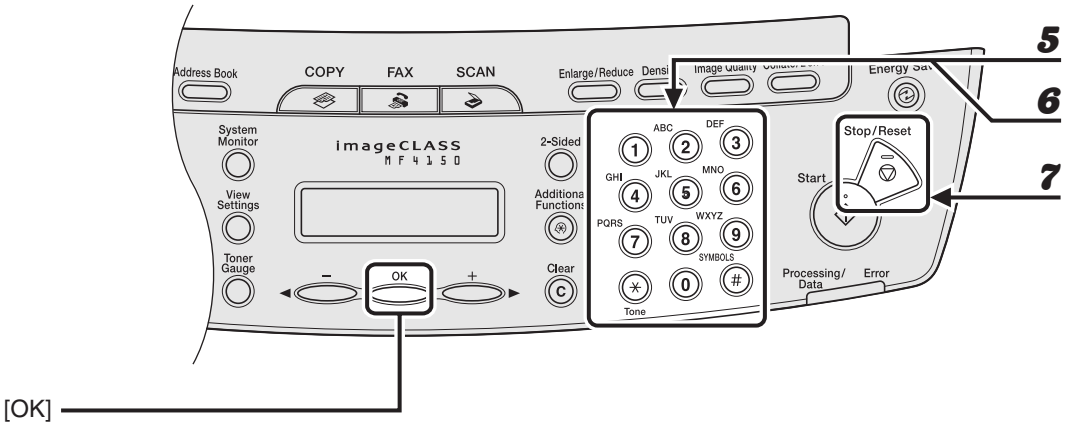

5 **Enter the destination name (max. 20 characters, including spaces) with the numeric keys, then press [OK].**

Ex.

```
NAME                    [A]
CAN
```

6 **Enter the fax number you register (max. 50 digits, including spaces and pauses) with the numeric keys, then press [OK].**

Ex.

```
TEL NUMBER ENTRY
012XXXXXXX_
```

If you register another coded dialing number, repeat the procedure from step 4.

7 **Press [Stop/Reset] to return to the standby mode.**

● Editing Coded Dialing

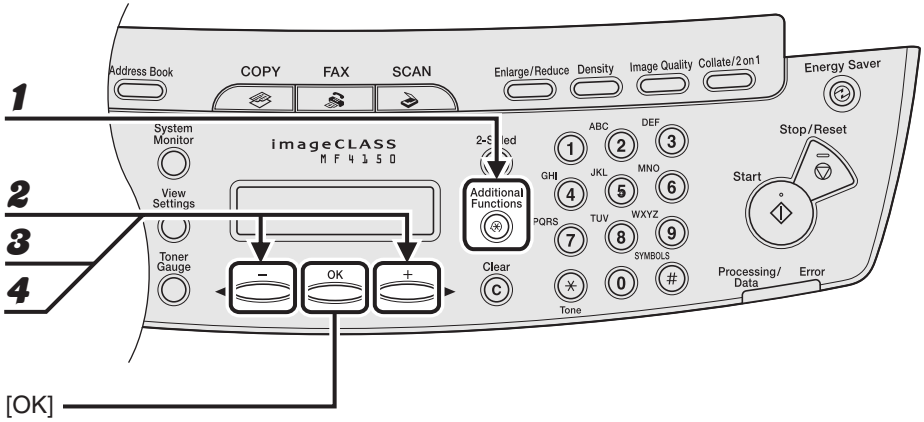

1 **Press [Additional Functions].**

2 **Press [◄ –] or [+ ►] to select <ADDRESS BOOK SET.>, then press [OK].**

3 **Press [◄ –] or [+ ►] to select <CODED DIAL>, then press [OK].**

4 **Press [◄ –] or [+ ►] to select the coded dialing code (00 to 99) that you want to edit, then press [OK].**

You can also enter a coded dialing code with the numeric keys after pressing [Coded Dial].

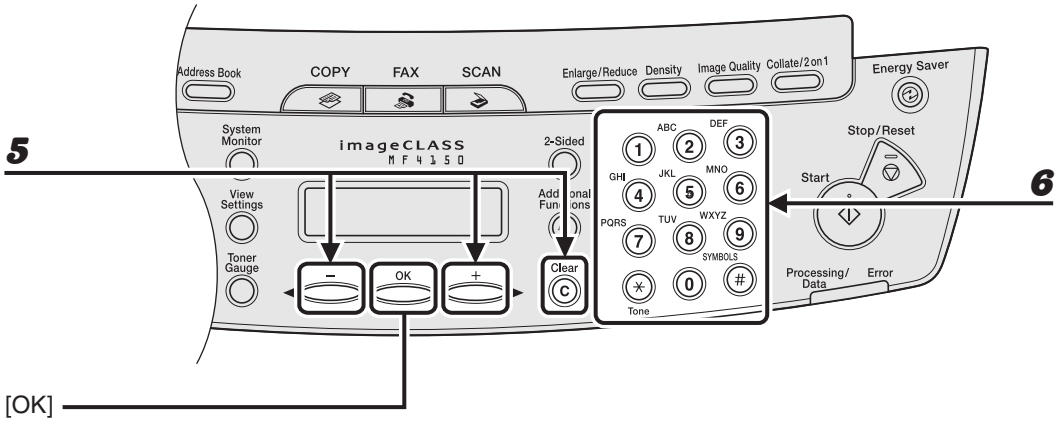

5 **Press [◄ –] or [+ ►] repeatedly to go to the wrong character, then press [Clear] to delete it.**

To delete the entire name, press and hold [Clear].

6 **Enter a new character with the numeric keys, then press [OK].**

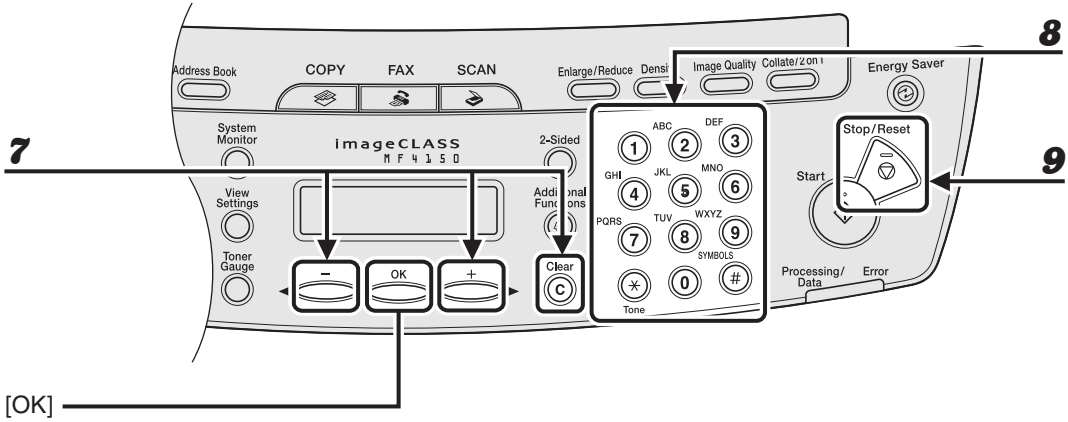

7 **Press [◄ –] or [+ ►] repeatedly to go to the wrong number, then press [Clear] to delete it.**

To delete all numbers, press and hold [Clear].

8 **Enter a new number with the numeric keys, then press [OK].**

9 **Press [Stop/Reset] to return to the standby mode.**

● Deleting Coded Dialing

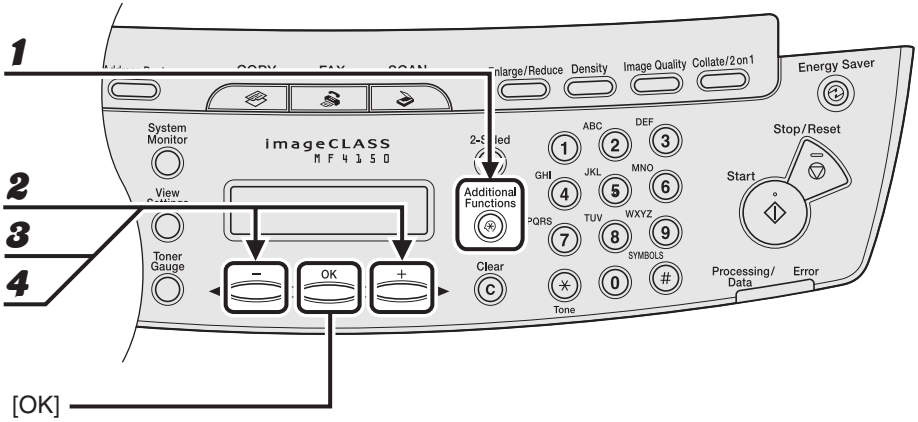

1 **Press [Additional Functions].**

2 **Press [◄ –] or [+ ►] to select <ADDRESS BOOK SET.>, then press [OK].**

3 **Press [◄ –] or [+ ►] to select <CODED DIAL>, then press [OK].**

4 **Press [◄ –] or [+ ►] to select the coded dialing code (00 to 99) that you want to delete, then press [OK].**

You can also enter a coded dialing code with the numeric keys after pressing [Coded Dial].

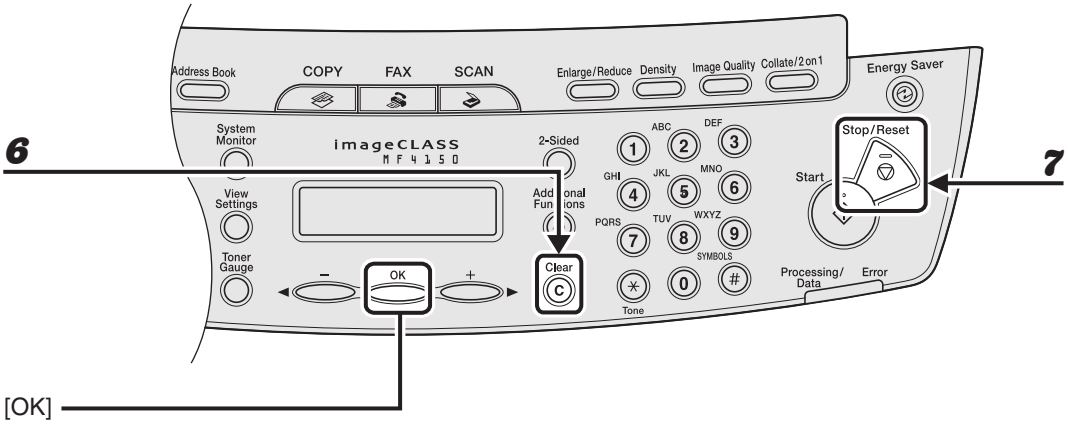

5 **Press [OK].**

6 **Press and hold [Clear] to delete all numbers, then press [OK].**

NOTE

When deleting all numbers, the registered name is cleared automatically.

7 **Press [Stop/Reset] to return to the standby mode.**

● Registering Group Dialing

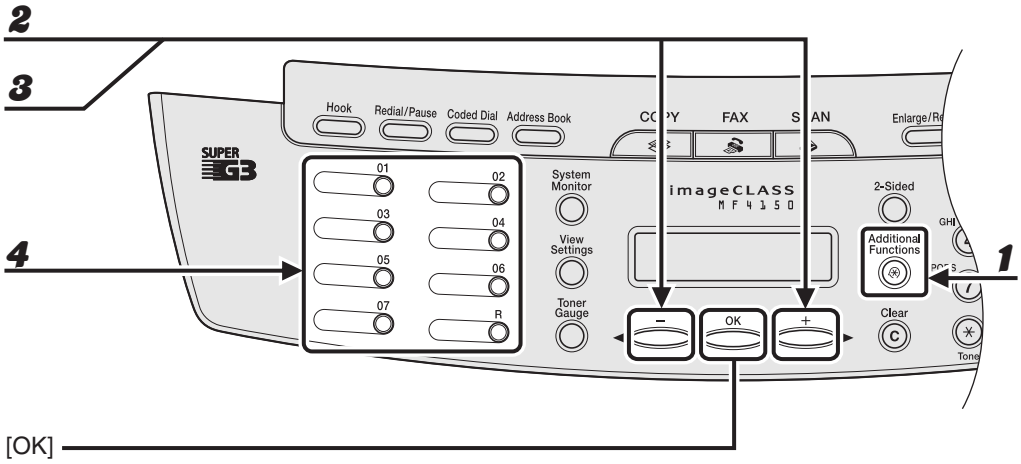

1 **Press [Additional Functions].**

2 **Press [◄ –] or [+ ►] to select <ADDRESS BOOK SET.>, then press [OK].**

3 **Press [◄ –] or [+ ►] to select <GROUP DIAL>, then press [OK].**

4 **Specify an empty one-touch speed dialing key that you want to set as the group dial, then press [OK].**

For details on selecting a one-touch speed dialing key, see “Registering One-Touch Speed Dialing,” on p. 4-7.

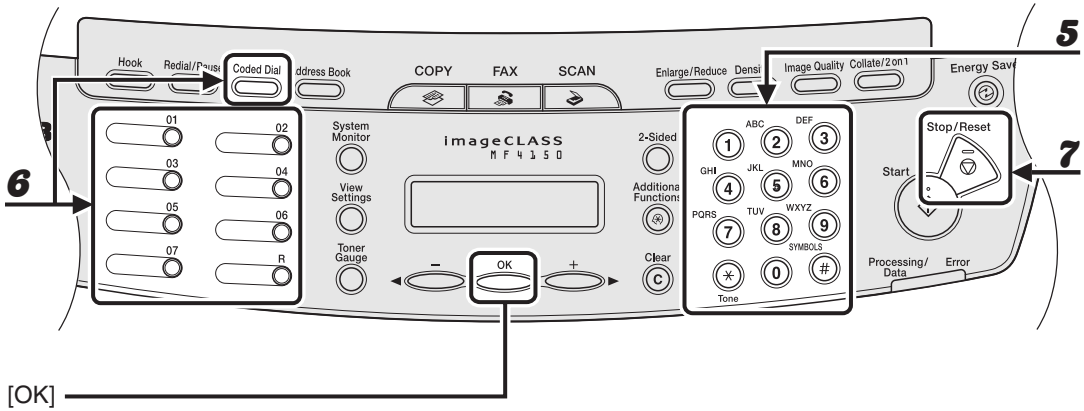

5 Enter the group name (max. 20 characters, including spaces) with the numeric keys, then press [OK].

Ex.

```
NAME                    [A]
CANON GROUP
```

6 Select the speed dialing numbers you want to register in the group (max. 50 destinations) until all destinations are registered, then press [OK].

The speed dialing number refers to the one-touch dialing number or coded dialing code under which the fax/telephone number is registered.
To enter a number stored under a one-touch speed dialing key, press the desired one-touch speed dialing key(s).
To enter a number stored under a coded dialing code, press [Coded Dial], then enter the two-digit code for the number with the numeric keys. For multiple entries, press [Coded Dial] between each entry.

NOTE

You can review the destinations which have been already entered with [◄−] or [+►].

7 Press [Stop/Reset] to return to the standby mode.

● Adding New Destination to Group

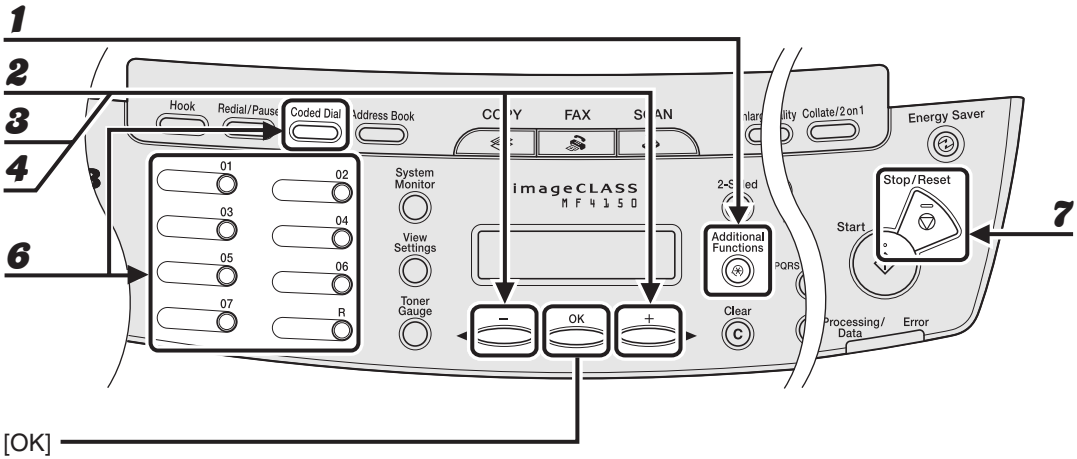

1 **Press [Additional Functions].**

2 **Press [◄ –] or [+ ►] to select <ADDRESS BOOK SET.>, then press [OK].**

3 **Press [◄ –] or [+ ►] to select <GROUP DIAL>, then press [OK].**

4 **Press [◄ –] or [+ ►] to select a group dial to edit, then press [OK].**

The group name appears.

5 **Press [OK].**

6 **Select the speed dialing number you want to add to the group, then press [OK].**

For details on entering the speed dialing number, see “Registering Group Dialing,” on p. 4-21.

7 **Press [Stop/Reset] to return to the standby mode.**

● Deleting Destination from Group

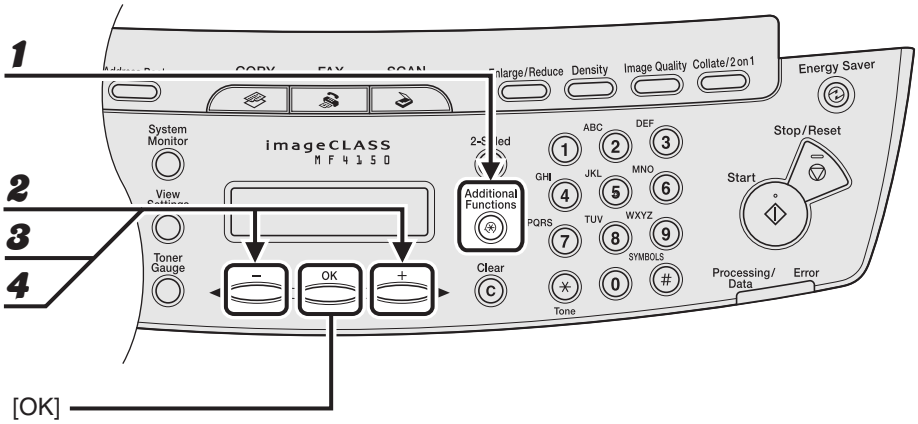

1 **Press [Additional Functions].**

2 **Press [◄ –] or [+ ►] to select <ADDRESS BOOK SET.>, then press [OK].**

3 **Press [◄ –] or [+ ►] to select <GROUP DIAL>, then press [OK].**

4 **Press [◄ –] or [+ ►] to select a group dial to delete, then press [OK].**

The group name appears.

5 **Press [OK].**

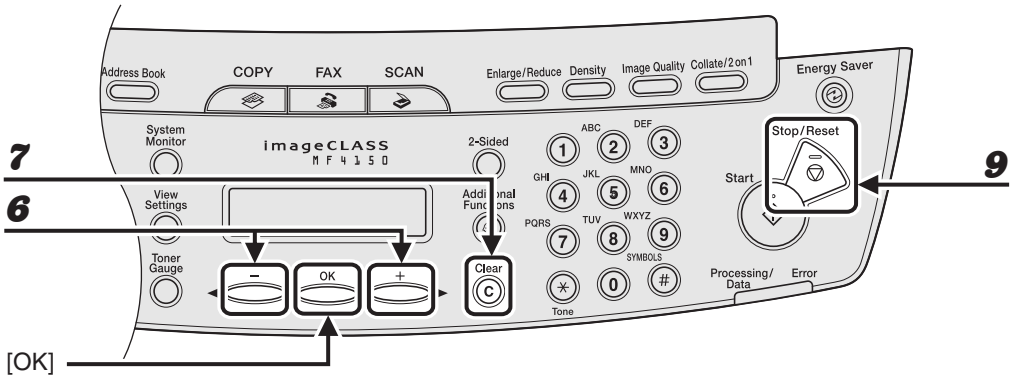

6 **Press [◄ –] or [+ ►] to display the speed dial number you want to delete from the group.**

7 **Press [Clear].**

8 **Repeat steps 6 and 7 if you want to delete another speed dialing number, then press [OK].**

9 **Press [Stop/Reset] to return to the standby mode.**

● Changing Group Name

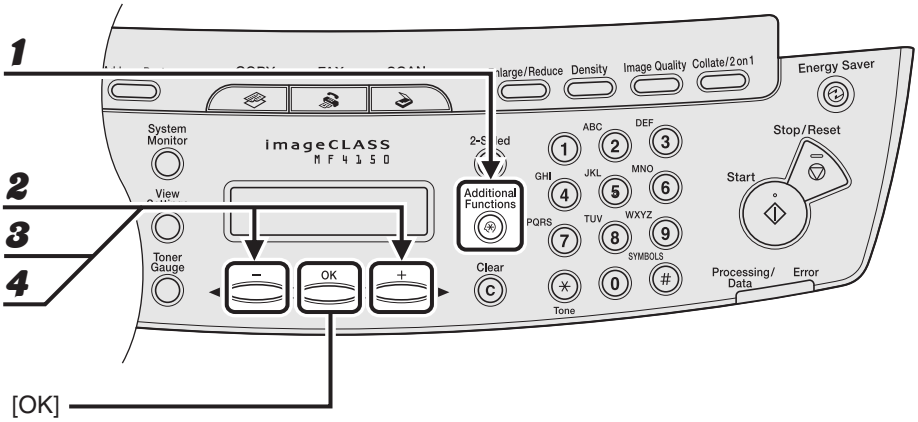

1 Press [Additional Functions].

2 Press [◄ –] or [+ ►] to select <ADDRESS BOOK SET.>, then press [OK].

3 Press [◄ –] or [+ ►] to select <GROUP DIAL>, then press [OK].

4 Press [◄ –] or [+ ►] to select a group dial to edit, then press [OK].

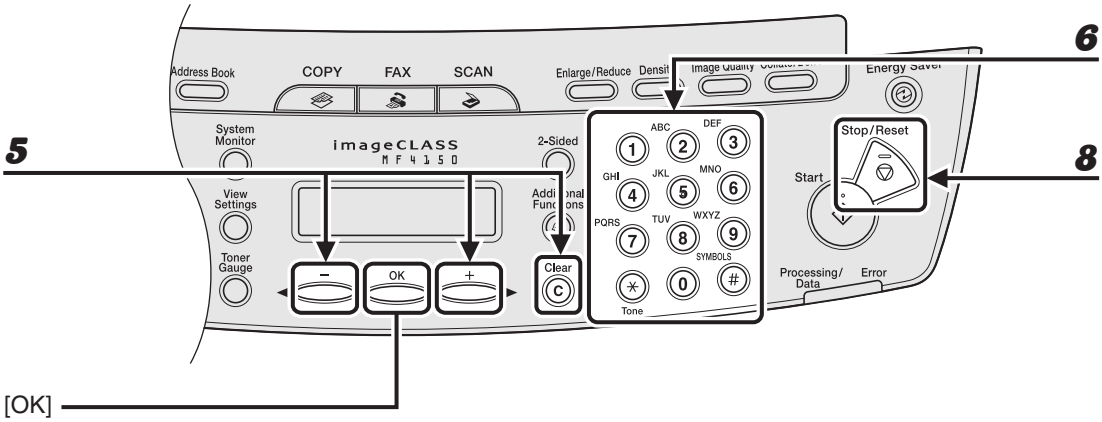

5 **Press [◄ –] or [+ ►] repeatedly to go to the wrong character, then press [Clear] to delete it.**

To delete the entire character, press and hold [Clear].

6 **Enter a new name with the numeric keys, then press [OK].**

7 **Press [OK].**

8 **Press [Stop/Reset] to return to the standby mode.**

● Deleting Group Dialing

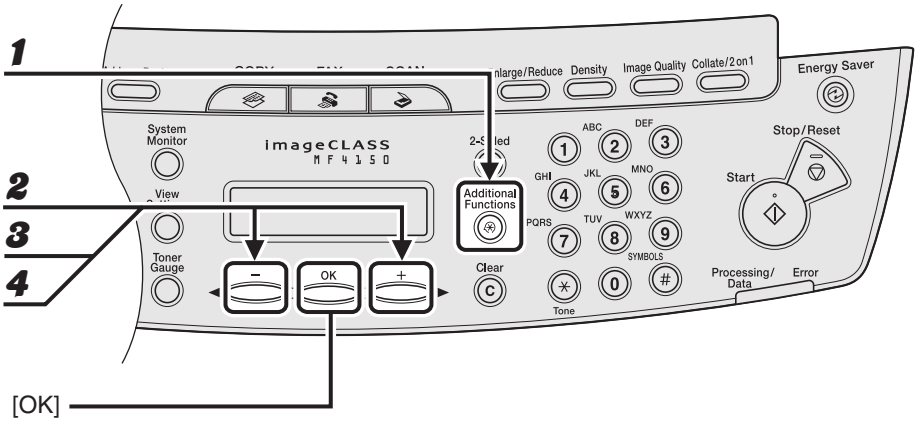

1 **Press [Additional Functions].**

2 **Press [◄ –] or [+ ►] to select <ADDRESS BOOK SET.>, then press [OK].**

3 **Press [◄ –] or [+ ►] to select <GROUP DIAL>, then press [OK].**

4 **Press [◄ –] or [+ ►] to select a group dial to delete, then press [OK].**

The group name appears.

5 **Press [OK].**

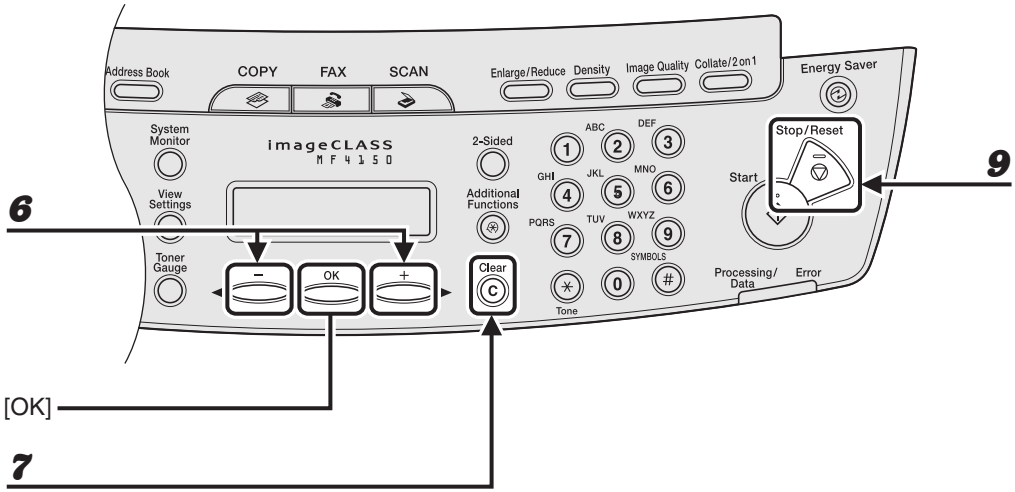

6 **Press [◄ –] or [+ ►] to display a speed dial number.**

7 **Press [Clear].**

8 **Repeat steps 6 and 7 until all speed dial numbers are deleted, then press [OK].**

NOTE

When deleting all speed dial numbers, the group name is cleared automatically.

9 **Press [Stop/Reset] to return to the standby mode.**

Using Speed Dialing

Follow the procedure below to send faxes to registered recipients using speed dialing. For easy reference, print out the list of recipients registered for speed dialing. (See Chapter 4, “Reports and Lists (MF4140/MF4150 Only),” in the Advanced Guide.)

● Using One-Touch Speed/Group Dialing

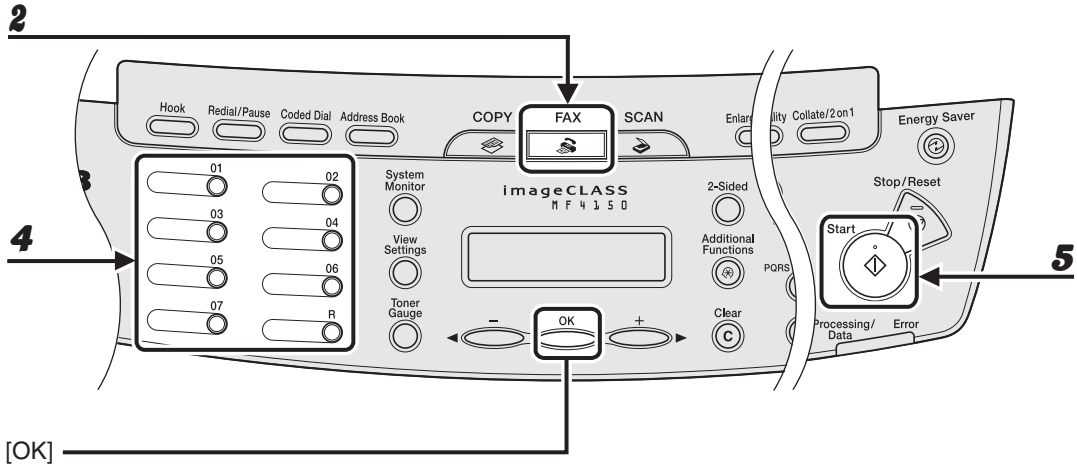

1 **Place the document on the platen glass or load it in the ADF.**

2 **Press [FAX].**

3 **Adjust any necessary settings for your document.**

For details, see “Scan Settings,” on p. 4-3.

4 **Press the desired one-touch speed or group dialing key (01 to 07).**

5 **Press [Start].**

When you set the document on the platen glass, press [Start] for each document. When scanning is complete, press [OK].

● Using Coded Dialing

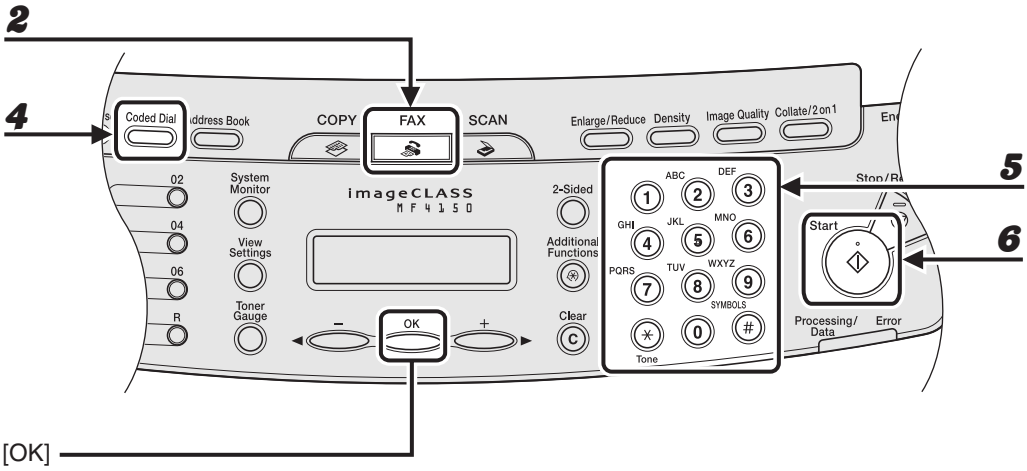

1 **Place the document on the platen glass or load it in the ADF.**

2 **Press [FAX].**

3 **Adjust any necessary settings for your document.**

For details, see “Scan Settings,” on p. 4-3.

4 **Press [Coded Dial].**

5 **Enter the desired two-digit code (00 to 99) with the numeric keys.**

Ex.

```
☎=012XXXXXXX
[*01]CANON
```

6 **Press [Start].**

When you set the document on the platen glass, press [Start] for each document. When scanning is complete, press [OK].

Manual Sending (MF4150 Only)

Use manual sending when you want to talk to the recipient before sending a document, or if the recipient does not have a fax machine that can receive automatically.

NOTE

– You cannot use the platen glass for manual sending.
– You cannot use group dialing for manual sending.

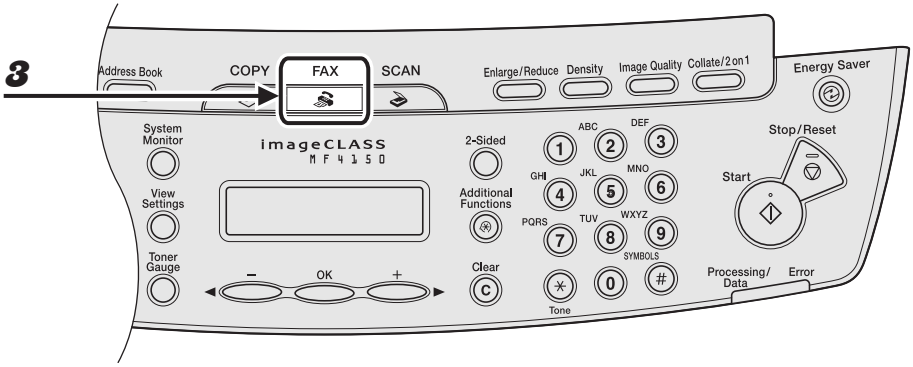

1 **Connect an optional handset or an external telephone to the machine if you want to talk to the recipient before sending a document.**

For details on how to connect an optional handset or an external telephone to the machine, see “Connect Telephone Cables and Install Handset (MF4140/MF4150 Only),” in the Starter Guide.

2 **Load the document in the ADF.**

3 **Press [FAX].**

4 **Adjust any necessary settings for your document.**

For details, see “Scan Settings,” on p. 4-3.

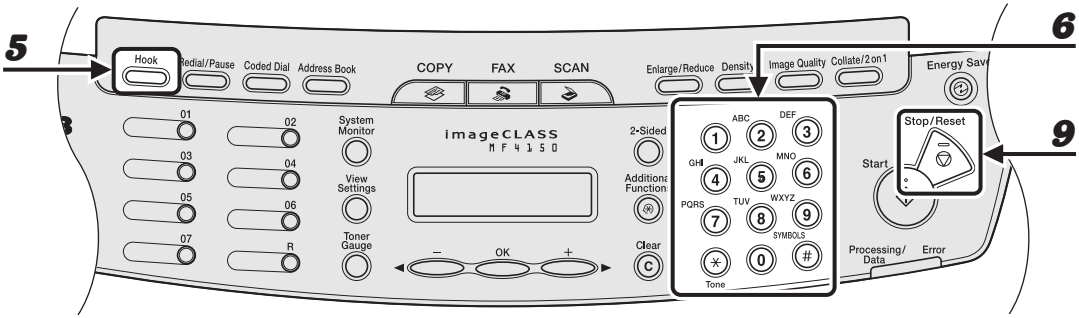

5 **Press [Hook] or pick up the optional handset or the handset of your external telephone.**

6 **Dial the recipient's fax/telephone number.**

NOTE

Make sure to confirm the dial tone before entering a fax number. If you enter the number before the dial tone can be heard, the call may not connect, or the wrong number may be dialed.

7 **Talk through the handset to the recipient.**

If you press [Hook] in step 5, you can pick up the handset when you hear the recipient's voice. If you hear a high-pitched signal instead of the recipient's voice, go to step 9.

8 **Ask the recipient to set their fax machine to receive faxes.**

9 **When you hear a high-pitched signal, press [Start], then hang up the handset.**

5 Receiving Faxes

(MF4140/MF4150 Only)

Follow this procedure to set the machine for receiving faxes.
For advanced receiving features, see Chapter 1, “Advanced Fax Features (MF4140/MF4150 Only),” in the Advanced Guide.

1 Enter the Setting Menu

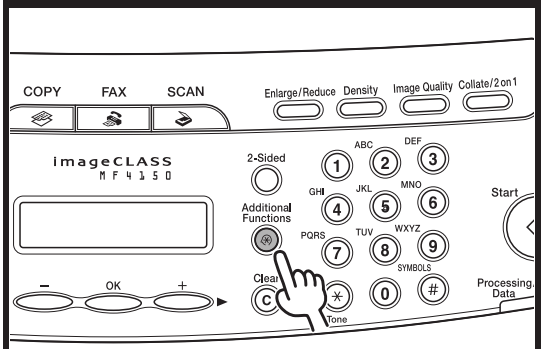

Press [Additional Functions].

2 Enter the Receive Mode

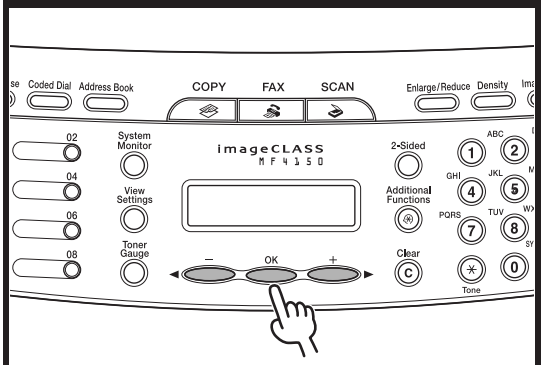

Select <FAX SETTINGS> with [◄ –] or [+ ►], then press [OK].

Select <RX SETTINGS> with [◄ –] or [+ ►], then press [OK].

Select <RX MODE> with [◄ –] or [+ ►], then press [OK].

3 Select the Receive Mode

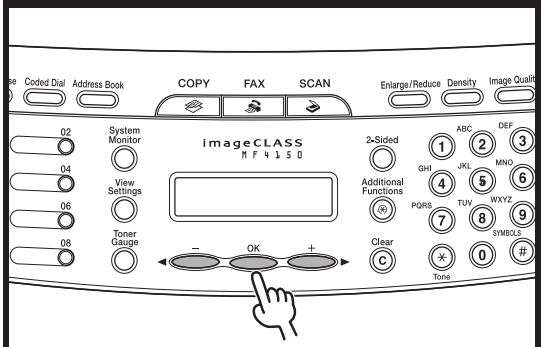

Select the receive mode with [◄ −] or [+ ►], then press [OK].

<FaxOnly>: Answers all calls as faxes.
<AnsMode>: Receives faxes automatically and records voice messages.
<NET SWITCH>: Distinguishes between fax and voice calls.
<FaxTel>: Switches between fax and voice calls automatically if the optional handset or an external telephone is connected to the machine.
<MANUAL>: Does not answer any calls. You have to manually receive faxes.
For details on these settings, See Chapter 1, “Advanced Fax Features (MF4140/MF4150 Only),” in the Advanced Guide.

NOTE

– For <AnsMode>, make sure an answering machine is connected to the machine.
– The <NET SWITCH> mode is available for certain countries only and requires subscription to a network switch service.

4 Exit the Setting Menu

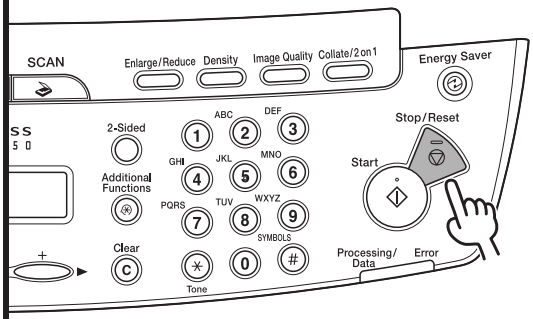

Press [Stop/Reset] to return to the standby display.

What if...

- **You press [Stop/Reset] to cancel a job:**
  The <CANCEL DURING TX/RX?> message appears. Press [◄ −] to select <Yes>. The job is canceled, and the display returns to the standby mode.
- **The <OUT OF TONER/CHANGE TONER> message appears:**
  The toner cartridge is almost empty. Replace the toner cartridge.
  For details on this error message, see “LCD Messages,” on p. 11-9.

6 Copying

Follow this procedure to make a copy.
For advanced copying features, see Chapter 2, “Advanced Copy Features,” in the Advanced Guide.

1 Set a Document

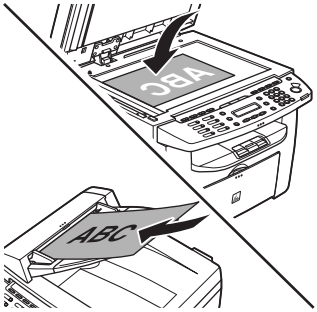

Place the document on the platen glass or load it in the ADF.

For documents you can copy, see “Document Requirements,” on p. 2-1.

2 Enter the Copy Mode

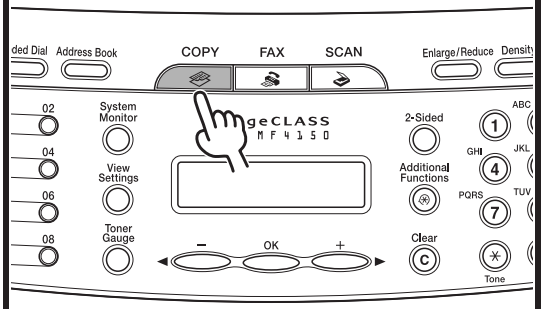

Press [COPY].

The COPY indicator lights and the machine enters copy the standby mode.

What if...

- **You want to adjust the resolution and density:**
  See “Scan Settings,” on p. 6-3.

3 Enter the Copy Quantity

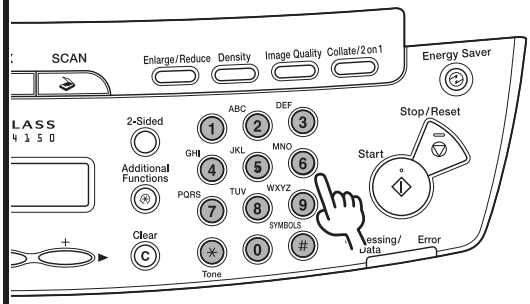

Enter the copy quantity (1 to 99) with the numeric key.

Ex.

```
100%          A4
◀ ■ ▶  TEXT/PHOTO    3
```

What if...

- **You enter a wrong number:**
  Press [Clear] and enter a new number.

4 Start Copying

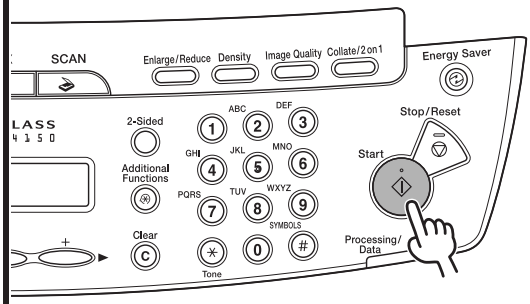

Press [Start].

What if...

- **You press [Stop/Reset] to cancel a job while scanning documents:**
  The job is canceled immediately, and the copy quantity is reset.
- **You press [Stop/Reset] to cancel a job while printing:**
  The <CANCEL COPYING?> message appears. Press [◄ ▬] to select <YES>.

Scan Settings

Before pressing [Start] to begin copying, you can adjust scan settings to better suit the document to be scanned. These settings return to the default values if Auto Clear function is activated or if you press [Stop/Reset].

Image Quality

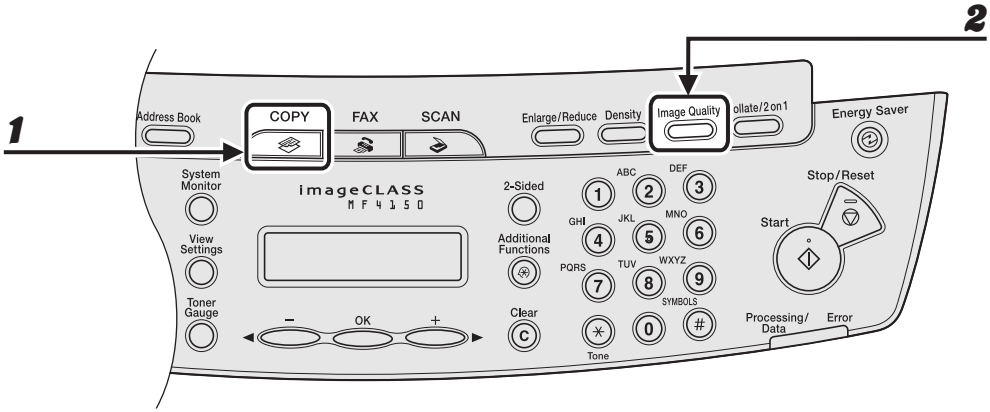

1 **Press [COPY].**

2 **Press [Image Quality] repeatedly to select the document type.**

<TEXT/PHOTO>: For documents that contain text and photos.
<TEXT>: For text documents.
<PHOTO>: For documents that contain fine text or photos.
<TEXT/PHOTO+>: For documents that contain fine text and photos.

NOTE

Copy density automatically changes to the manual mode when <TEXT/PHOTO>, <PHOTO>, or <TEXT/PHOTO+> is set.

Density

You can adjust the density to the most appropriate level for the document either automatically or manually.

● Adjusting Automatically

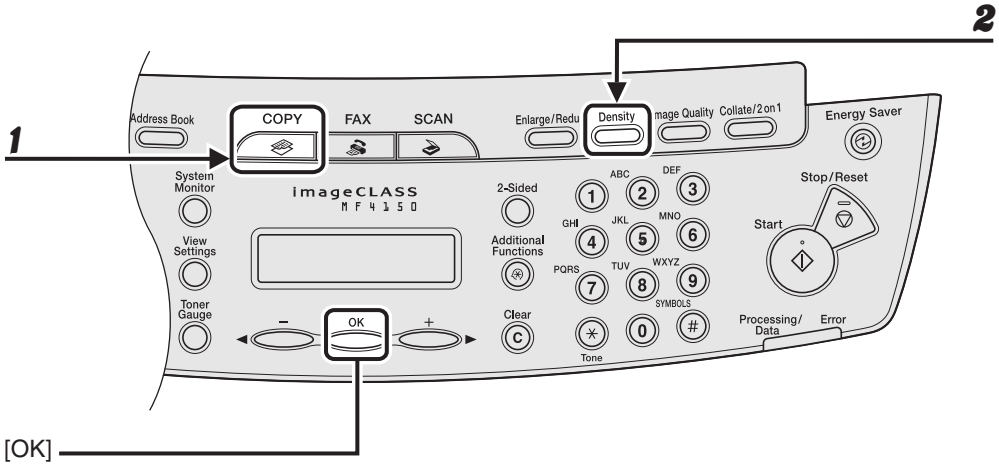

1 **Press [COPY].**

2 **Press [Density] repeatedly until <AUTO> appears, then press [OK].**

NOTE

The image quality is automatically set to <TEXT>.

● Adjusting Manually

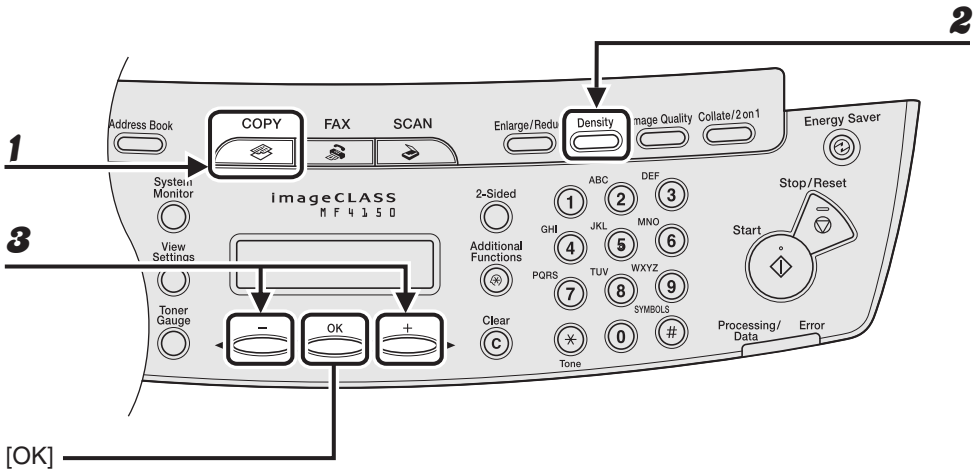

1 **Press [COPY].**

2 **Press [Density] repeatedly to select the manual mode.**

Ex.

```
DENSITY
-LT   ◐□□□□■□□□□◑   DK+
```

3 **Press [◄ –] or [+ ►] to adjust the copy density, then press [OK].**

[+ ►]: to make light documents darker
[◄ –]: to make dark documents lighter

Zoom Ratio

● Preset Zoom

You can enlarge or reduce documents from one standard paper size to another.

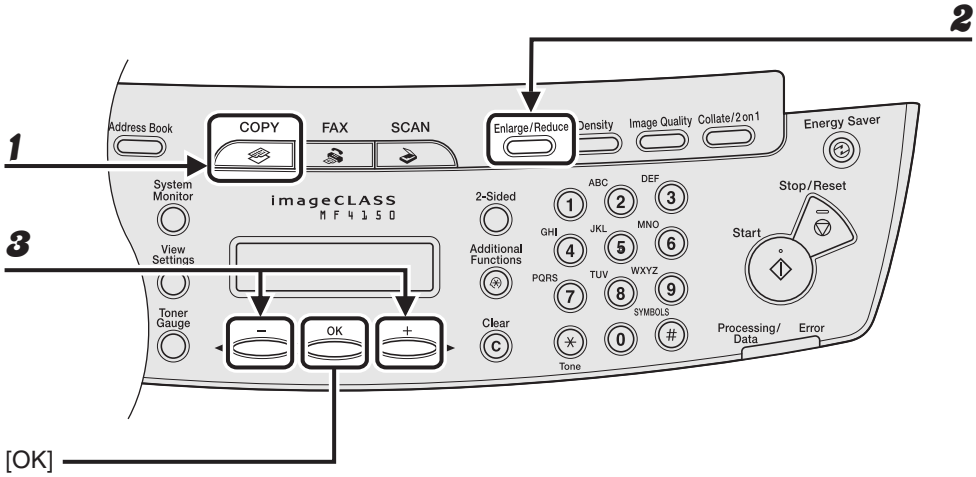

1 **Press [COPY].**

2 **Press [Enlarge/Reduce].**

3 **Press [◄ –] or [+ ►] to select the copy ratio, then press [OK].**

– 200% MAX.
– 141% A5 → A4
– 122% A5 → B5
– 115% B5 → A4
– 100%
– 86% A4 → B5
– 81% B5 → A5
– 70% A4 → A5
– 50% MIN.

NOTE

When <PAPER SIZE GROUP> in the <COPY SETTINGS> menu is set to <INCHES> or <AB>, the preset copy ratios change as follows:
INCHES: 50%, 64%, 78%, 100%, 129%, 200%
A: 50%, 70%, 100%, 141%, 200%

● Zoom Designation

You can reduce or enlarge images by any copy ratio, in 1 % increments. The available copy ratios are from 50 % to 200 %.

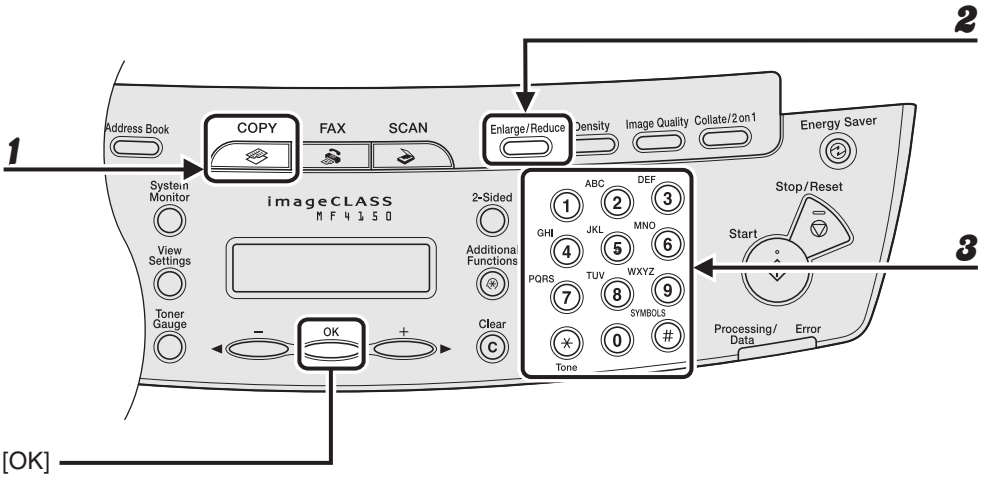

1 **Press [COPY].**

2 **Press [Enlarge/Reduce] twice.**

3 **Enter the copy ratio with the numeric keys, then press [OK].**

Ex.

```
ZOOM   50-200%
 -        100%        +
```

You can also use [◄−] or [+►] to adjust the zoom ratio. To increase the zoom ratio, press [+►]. To decrease the copy ratio, press [◄−].

NOTE

To return the copy ratio to 100%, press [Stop/Reset].

7 Printing

Follow this procedure to print a document from your computer.
Make sure that the printer driver is installed.
For details on printer driver settings, see Online Help.

1 Start the Print Command

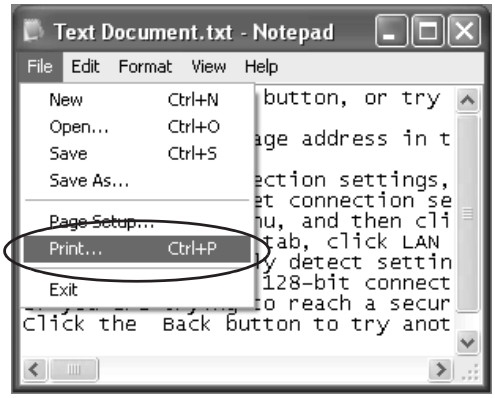

From an open document on an application, click [File] > [Print].

2 Select the Print Command

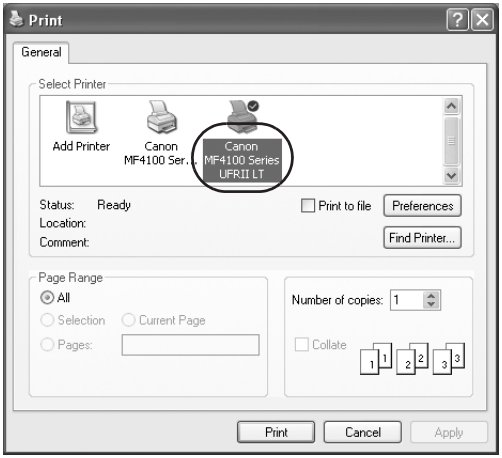

Select the printer icon for the machine ([Canon MF4100 Series UFRII LT]).

3 Adjust Preferences

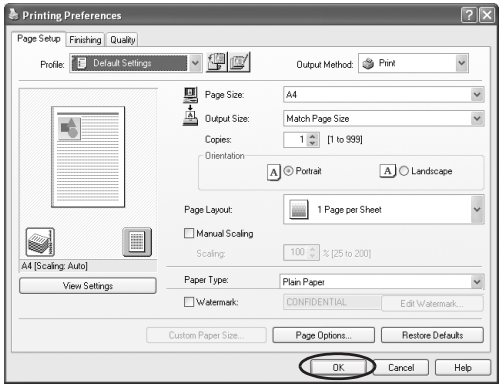

Click [Preferences] or [Properties] to open the dialog box. After finished, click [OK].

4 Print the Document

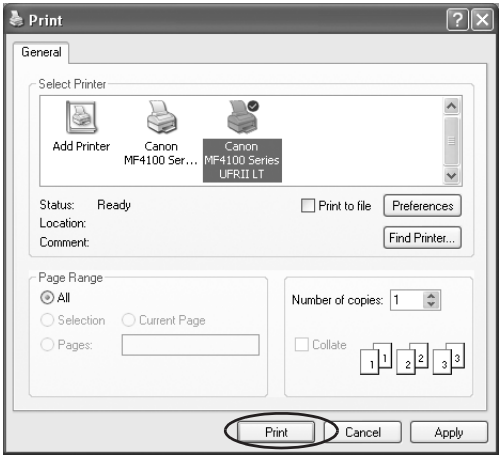

Click [Print] or [OK].

What if...

- **You want to cancel printing:**
  See Chapter 3, “System Monitor,” in the Advanced Guide.

8 Scanning

Follow this procedure to scan a document to your computer.
Make sure that the scanner driver is installed.
For details on scanner driver settings, see the Scanner Driver Guide (in the User Software CD).

1 Set a Document

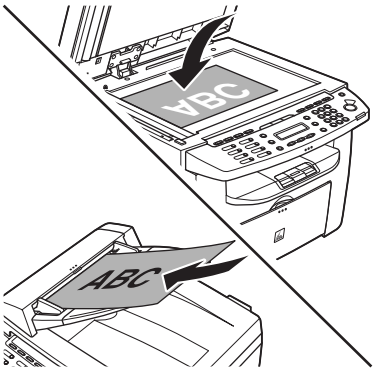

Place the document on the platen glass or load it in the ADF.

For documents you can scan, see “Document Requirements,” on p. 2-1.

2 Enter the Scan Mode

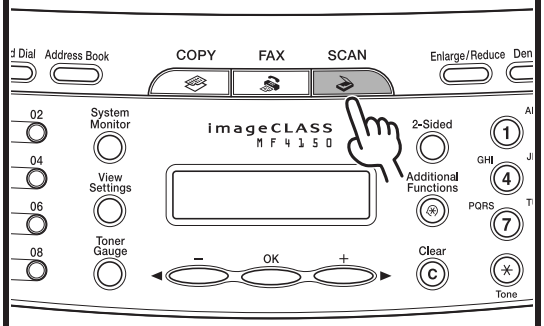

Press [SCAN].

The SCAN indicator lights up and the machine enters the scan standby mode.

3 Set Scan Function

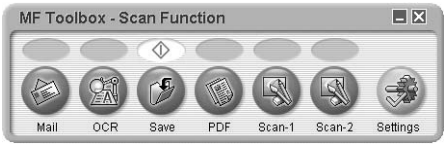

Start MF Toolbox, then set the scanning format.

The mark will be displayed above the button you select. For details on the MF Toolbox Settings, see Chapter 2, “Scanning a Document,” in the Scanner Driver Guide.

4 Start Scanning

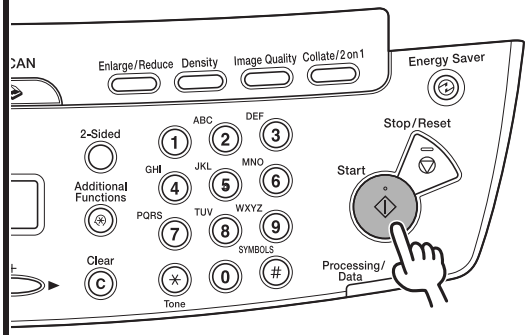

Press [Start].

What if...

- **You want to cancel scanning:**
  Press [Stop/Reset] on the operation panel, then click [OK] on the computer screen.

9 PC Faxing

(MF4140/MF4150 Only)

Follow this procedure to send a fax from your computer.
Make sure that the fax driver is installed.
For details on fax driver settings, see Online Help.

1 Start the Print Command

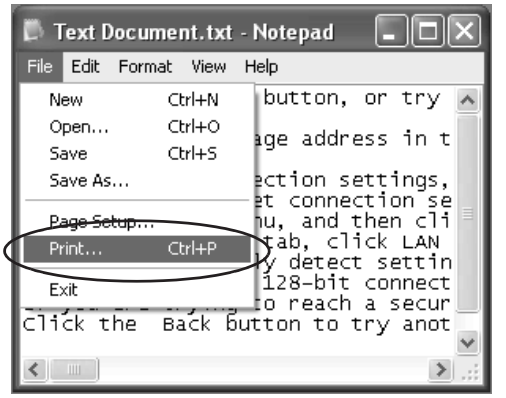

From an open document on an application, click [File] > [Print].

2 Select the Fax

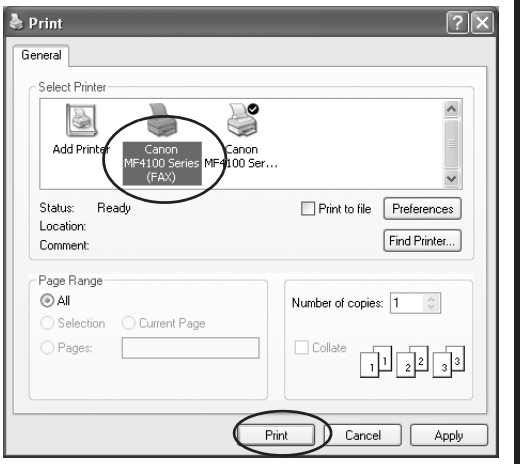

Select the fax icon ([Canon MF4100 Series(FAX)]), then click [Print] or [OK].

What if...

- **You want to adjust the fax properties:** Click [Preferences] or [Properties] and adjust the settings.

3 Set the Destination

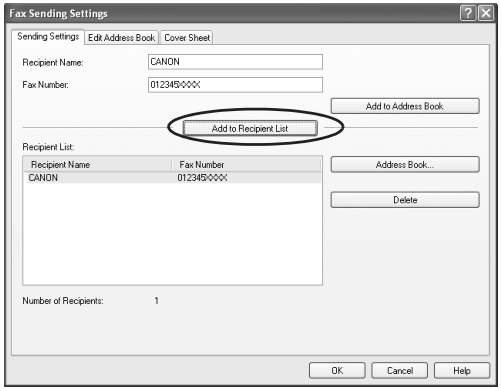

Specify the name and fax number in [Sending Settings], then click [Add to Recipient List].

What if...

- **You want to send a fax with the cover sheet:**
  Click the [Cover Sheet] tab and set the format for the cover sheet attachment.

4 Send the Document

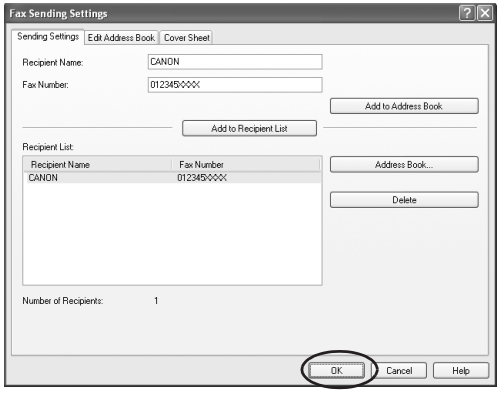

Click [OK] in the Fax Sending Settings.

What if...

- **You want to cancel sending a fax:**
  See Chapter 3, “System Monitor,” in the Advanced Guide.

10 Maintenance

Cleaning the Machine

Note the following before cleaning your machine:

- **Make sure no document is stored in memory, then turn off the main power switch, and disconnect the power cord.**
- **Use a soft cloth to avoid scratching the components.**
- **Do not use tissue paper, paper towels, or similar materials for cleaning; they can stick to the components or generate static charges.**

CAUTION

Never use volatile liquids such as thinners, benzene, acetone, or any other chemical cleaner to clean the machine. These can damage the machine components.

Exterior

1. **Turn off the main power switch and disconnect the power cord.**
2. **Wipe the machine's exterior with a clean, soft, lint-free cloth dampened with water or diluted dishwashing detergent solution.**
3. **Wait for the machine to dry, then reconnect the power cord and turn on the main power switch.**

Interior

Clean the machine's print area periodically to prevent toner powder and paper dust from accumulating inside.

1 **Turn off the main power switch and disconnect the power cord.**

2 **Lift the scanning platform until it is locked (A), and open the printer cover (B).**

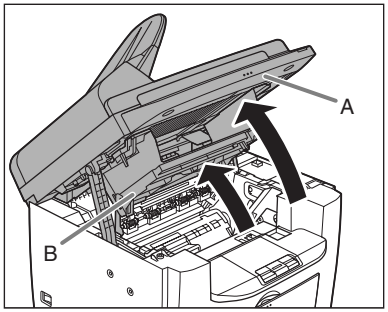

3 **Remove the toner cartridge.**

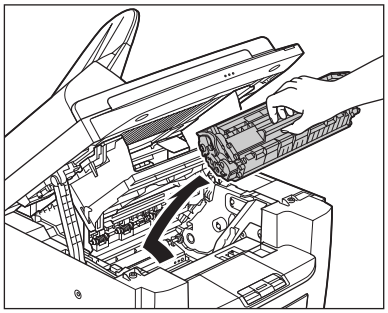

CAUTION

– To avoid exposing the toner cartridge to light, place it in its protective bag or wrap it in a thick cloth.
– Do not open the drum protective shutter on the toner cartridge. Print quality may deteriorate if the drum surface is exposed to light or is damaged.

NOTE

Always hold the toner cartridge by its handle.

4 **Use a clean, soft, dry, lint-free cloth to remove any toner or paper debris from the machine's interior.**

CAUTION

- Do not touch the fixing assembly (A) as it becomes very hot during use.
- Do not touch the transfer roller (B) as this can damage the machine.

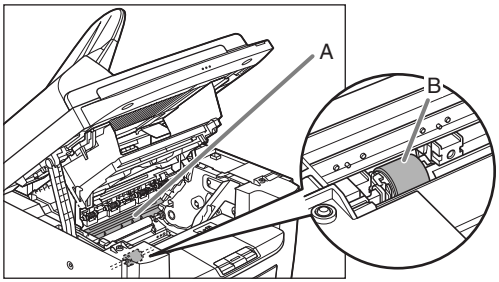

- If loose toner comes into contact with your skin or clothing, wash with cold water. Warm water will set the toner.

5 Hold the toner cartridge by its handle (A).

The arrow (A) on the toner cartridge should be facing away from you and pointing down.

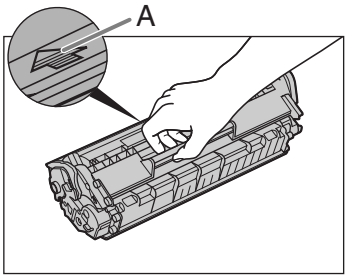

6 Insert the toner cartridge into the machine as far as it will go.

Align the guide (A) on the left side of the toner cartridge with the groove inside the machine.

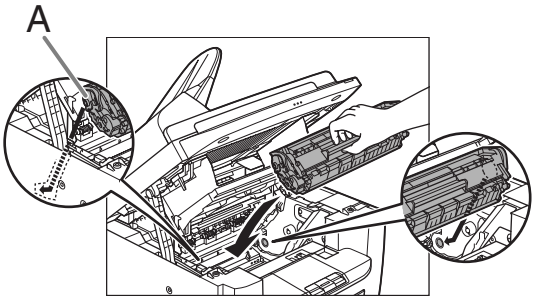

7 Push the toner cartridge to make sure it is properly set in the machine.

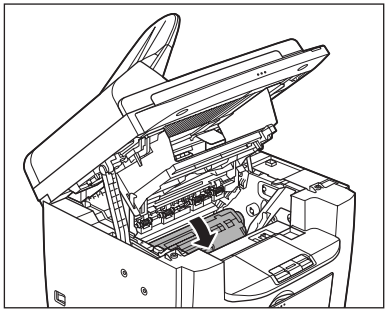

8 **Close the printer cover and lower the scanning platform.**

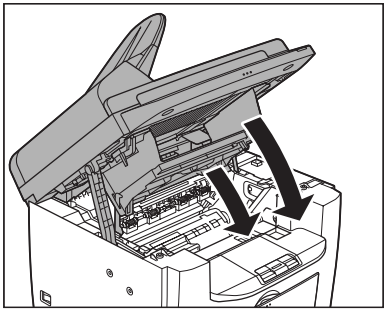

CAUTION

Be careful not to get your fingers caught.

9 **Reconnect the power cord and turn on the main power switch.**

Fuser Roller

If black streaks appear with printing, the fuser roller in the main unit may be dirty. Should this occur, clean the fusing roller in the following procedure. The roller should also be cleaned each time the toner cartridge is replaced. Load a sheet of blank A4 paper into the multi-purpose tray and start cleaning.

NOTE

Cleaning the roller takes approximately 130 seconds.

1 **Press [Additional Functions].**

2 **Press [◄ –] or [+ ►] to select <ADJUST./CLEANING>, then press [OK].**

3 **Load a sheet of blank A4 paper in the multi-purpose tray.**

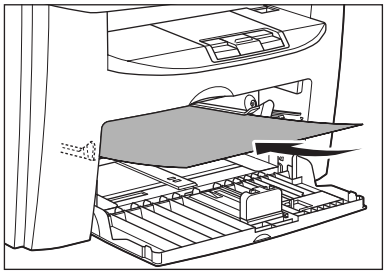

4 **Press [◄ –] or [+ ►] to select <FIX. UNIT CLEANING>, then press [OK].**

Cleaning starts. When finished, the display returns to the standby mode.

NOTE

– Use standard paper as the cleaning paper.
– Throw away the cleaning paper after use.

Scanning area

Keep the scanning area clean to avoid dirty copies or faxes to be sent.

● Platen glass

1 **Open the ADF/platen glass cover.**

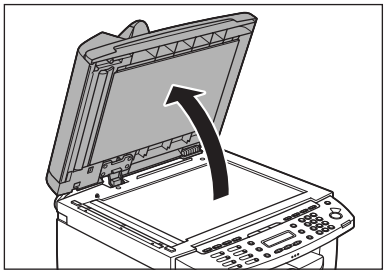

2 **Clean the platen glass and the underside of the ADF/platen glass cover with a cloth dampened with water. Then, wipe the area with a soft, dry cloth.**

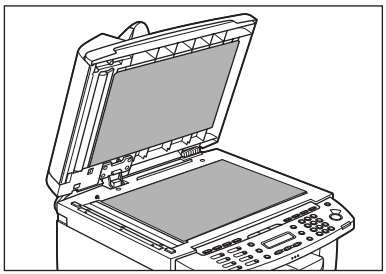

NOTE

Do not dampen the cloth too much, as this may tear the document or damage the machine.

3 **Close the ADF/platen glass cover.**

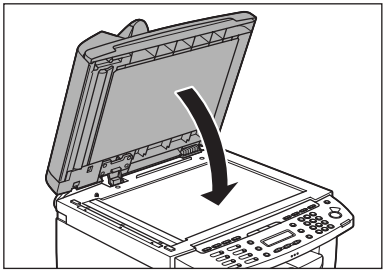

CAUTION

Be careful not to get your fingers caught.

● ADF (M4150 Only)

If your documents have black streaks or appear dirty after copying them using the ADF, this may be caused by pencil lead rubbing off the documents and onto the roller. Clean the ADF scanning area, film, and roller.

1 **Turn off the main power switch and disconnect the power cord.**

2 **Open the ADF cover.**

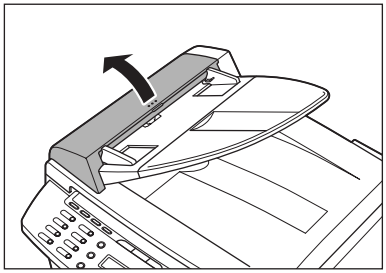

3 **Clean the rollers (A) inside the ADF with a cloth dampened with water. Then wipe the area with a soft, dry cloth.**

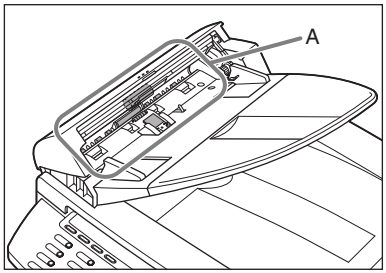

NOTE

Do not dampen the cloth too much, as this may tear the document or damage the machine.

4 Close the ADF cover.

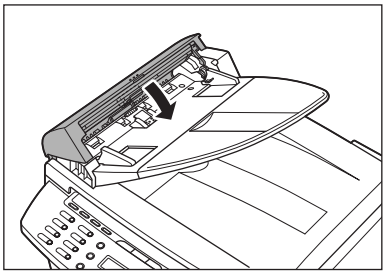

CAUTION

Be careful not to get your fingers caught.

5 Open the ADF/plate glass cover.

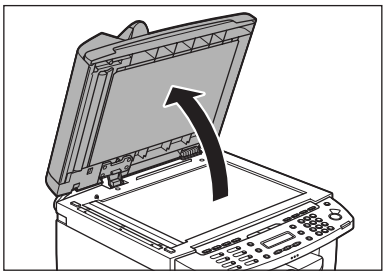

6 Clean the ADF scanning area (on the left side of the platen glass) and the document feeding roller with a cloth dampened with water. Then wipe the area with a soft, dry cloth.

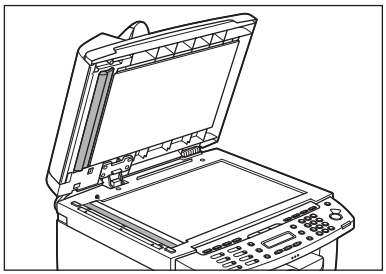

7 Close the ADF/plate glass cover.

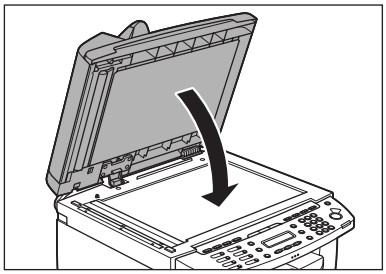

CAUTION

Be careful not to get your fingers caught.

8 Reconnect the power cord and turn on the main power switch.

Replacing the Toner Cartridge

On MF4140/MF4150, when the LCD displays <OUT OF TONER/CHANGE TONER>, or toner level is low by pressing [Toner Gauge], redistribute toner in the toner cartridge. If the message persists, replace the toner cartridge.
On MF4122, when the printout has vertical white streaks, or toner level is low by pressing [Toner Gauge], redistribute the toner inside the cartridge. If the problem persists, replace the cartridge.

Redistributing Toner

1 **Lift the scanning platform until it is locked (A), and open the printer cover (B).**

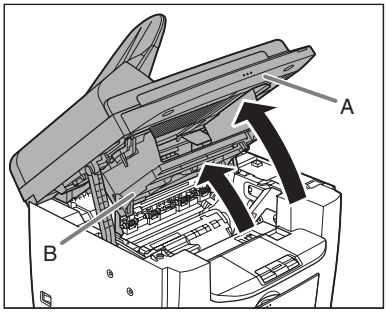

2 **Remove the toner cartridge.**

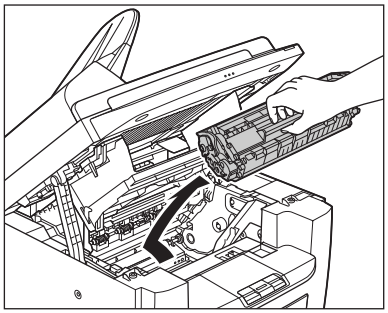

3 **Gently rock the toner cartridge five or six times to distribute toner evenly.**

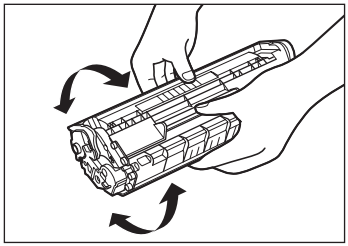

4 Hold the toner cartridge by its handle (A).

The arrow (A) on the toner cartridge should be facing away from you and pointing down.

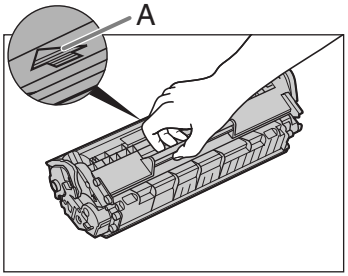

CAUTION

– Do not open the drum protective shutter on the toner cartridge. Print quality may deteriorate if the drum surface is exposed to light or is damaged.

NOTE

– Always hold the toner cartridge by its handle.

5 Insert the toner cartridge into the machine as far as it will go.

Align the guide (A) on the left side of the toner cartridge with the groove inside the machine.

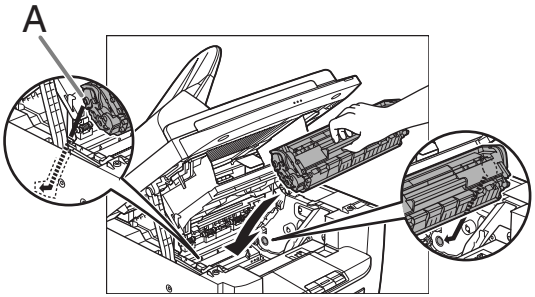

6 Push the toner cartridge to make sure it is properly set in the machine.

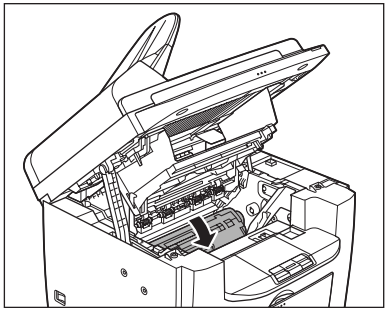

7 Close the printer cover and lower the scanning platform.

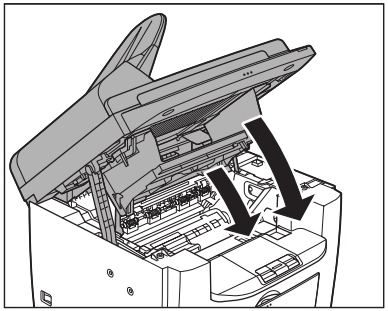

CAUTION

Be careful not to get your fingers caught.

Replacing the Toner Cartridge with a New One

1 **Lift the scanning platform until it is locked (A), and open the printer cover (B).**

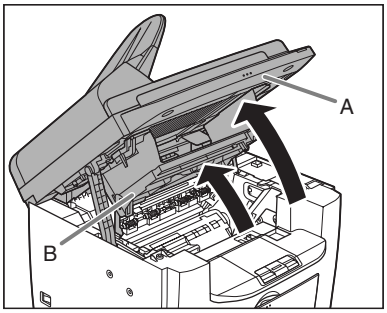

2 **Remove the toner cartridge.**

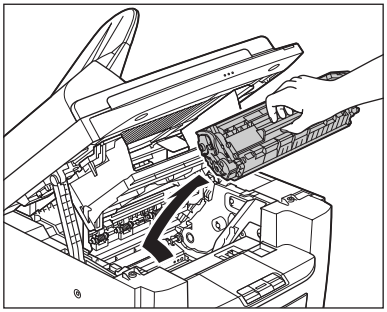

3 **Remove the new toner cartridge from the protective bag.**

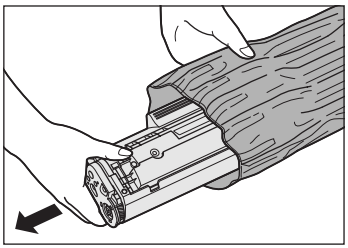

NOTE

Save the protective bag. You may need it later when you remove the toner cartridge from the machine.

4 **Gently rock the toner cartridge five or six times to distribute toner inside.**

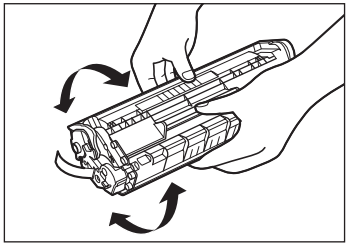

5 **Hold the toner cartridge with one hand, and pull out the seal completely.**

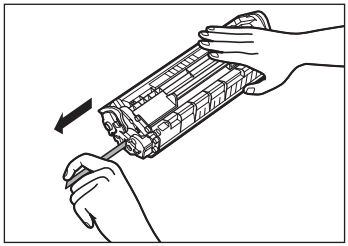

NOTE

Do not pull out the seal at an angle.

6 Hold the toner cartridge by its handle.

The arrow (A) on the toner cartridge should be facing away from you and pointing down.

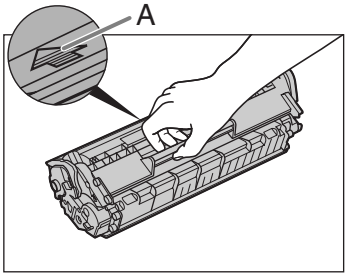

CAUTION

Do not open the drum protective shutter on the toner cartridge. Print quality may deteriorate if the drum surface is exposed to light or is damaged.

NOTE

Always hold the toner cartridge by its handle.

7 Insert the toner cartridge into the machine as far as it will go.

Align the guide (A) on the left side of the toner cartridge with the groove inside the machine.

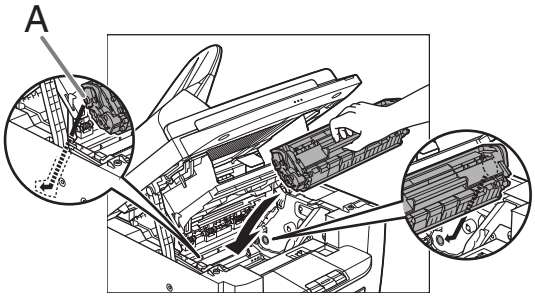

8 Push the toner cartridge to make sure it is properly set in the machine.

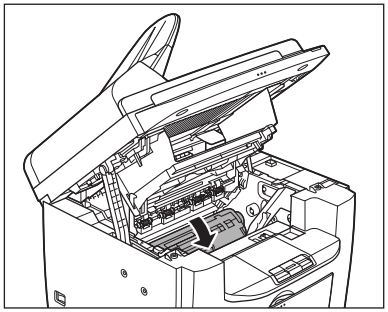

9 Close the printer cover and lower the scanning platform.

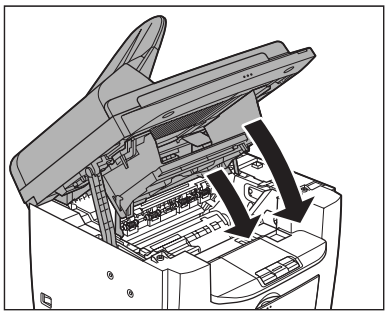

CAUTION

Be careful not to get your fingers caught.

Transporting the Machine

Follow this procedure to avoid vibration damage to the machine when transporting it over a long distance.

1 **Turn off the main power switch.**

2 **Disconnect the power cord and all the cables from the back of the machine.**

3 **Lift the scanning platform until it is locked (A), and open the printer cover (B).**

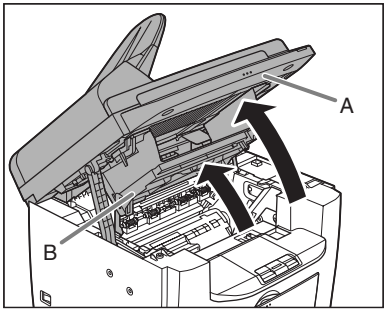

4 **Remove the toner cartridge.**

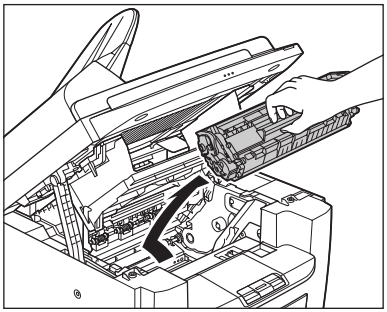

CAUTION

– To avoid exposing the toner cartridge to light, place it in its protective bag or wrap it in a thick cloth.
– Do not open the drum protective shutter on the toner cartridge. Print quality may deteriorate if the drum surface is exposed to light or is damaged.

NOTE

Always hold the toner cartridge by its handle.

5 **Close the printer cover and lower the scanning platform.**

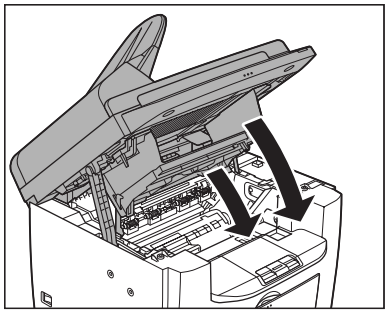

CAUTION

Be careful not to get your fingers caught.

6 **Remove the dust cover from the paper feeding tray.**

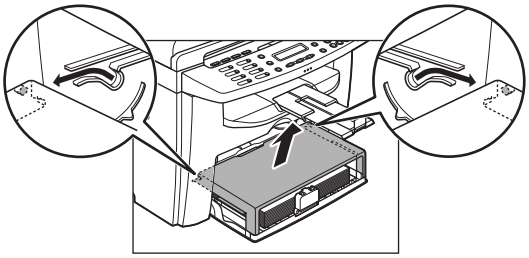

7 **Remove the paper from the paper feeding tray.**

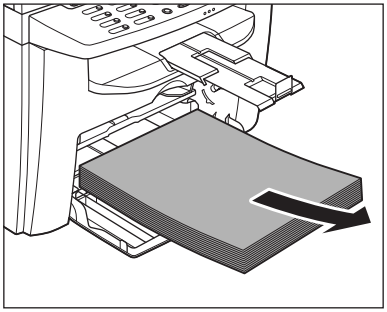

8 **Store the dust cover inside the machine.**

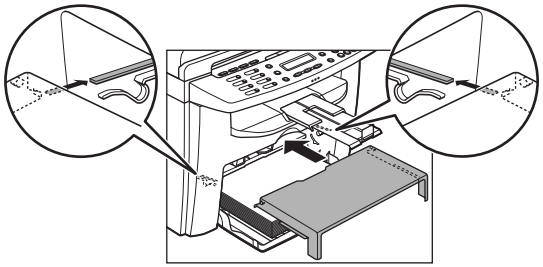

9 **Push the paper guide rail, and then close the paper feeding tray.**

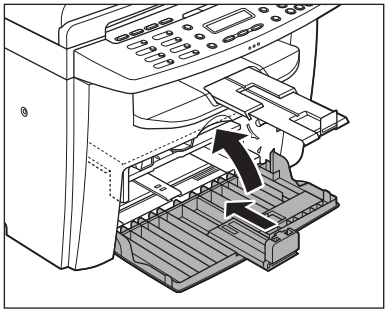

10 **Detach the Document feeder tray (MF4150 Only).**

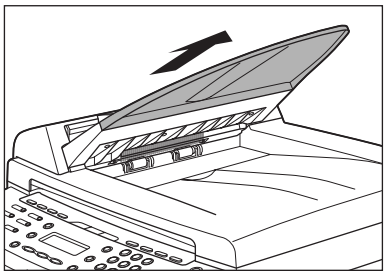

11 **Fold the paper stopper, and then push the output tray extension into the machine.**

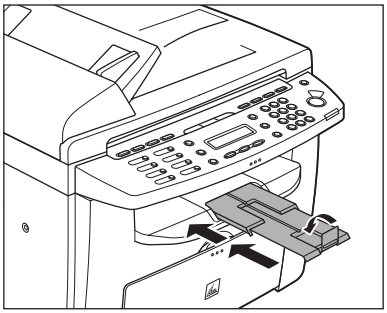

12 **Make sure all the covers are closed.**

13 **Grip the handles on both sides of the machine and lift it carefully, as shown in the illustration below.**

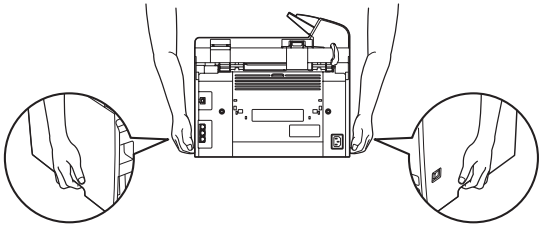

CAUTION

– Do not lift the machine by any of its attachments. Dropping the machine can cause personal injury.
– If you have a back problem, make sure to check the weight of this machine before carrying. (See “Specifications,” on p. 13-1.)

11 Troubleshooting

Clearing Jams

When <CHECK DOCUMENT>, <PAPER JAM> or <PAPER JAM/OPEN REAR COVER> appears on the LCD display, remove jammed paper from the machine first, then from the paper feeding tray or multi-purpose tray if necessary. Check the following if you experience repeated paper jams:

– Fan and tap the paper stack on a flat surface before loading it in the machine.
– Check that the paper you are using meets the requirements for use. (See “Print Media,” on p. 3-1.)
– Make sure you have removed any scraps of paper from the inside of the machine.

CAUTION

– When removing jammed documents or paper, take care not to cut your hands on the edges of the document or paper.
– When removing jammed paper or when inspecting the inside of the machine, do not allow necklaces, bracelets, or other metal objects to touch the inside of the machine, as this may result in burns or electrical shock.
– If you tear the paper, remove any torn pieces to avoid further jams.
– If loose toner comes into contact with your skin or clothing, wash with cold water. Warm water will set the toner.

NOTE

Do not force a jammed document or paper out of the machine. Contact your local authorized Canon dealer or the Canon help line for assistance if needed.

Document Jams (MF4150 Only)

When <CHECK DOCUMENT> appears on the LCD display, remove a jammed document from the ADF.

1 **Open the ADF cover.**

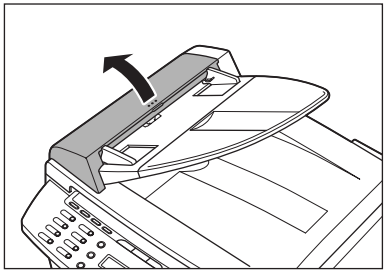

2 **Hold both sides of any jammed documents and gently pull them out straight upward.**

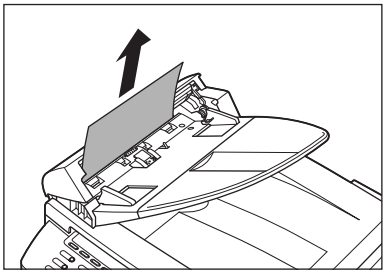

NOTE

Do not pull the document forcefully as it may tear.

3 **Hold both sides of any jammed documents and gently pull them out.**

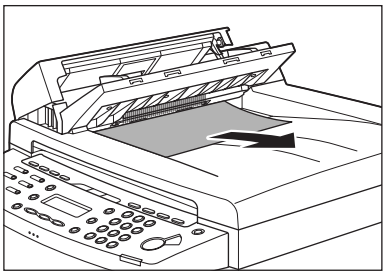

4 **Close the ADF cover.**

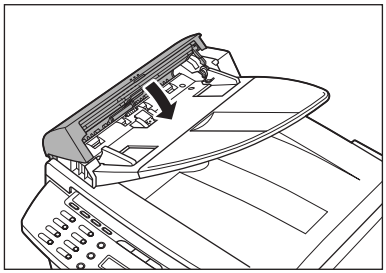

CAUTION

Be careful not to get your fingers caught.

5 **Open the ADF/platen glass cover, and then hold both sides of any jammed documents and gently pull them out.**

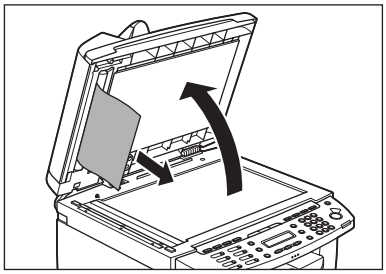

6 **Close the ADF/platen glass cover.**

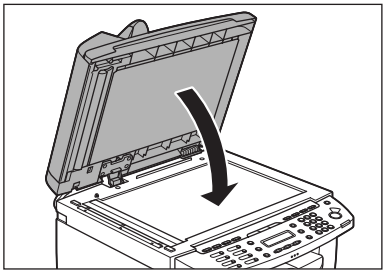

CAUTION

Be careful not to get your fingers caught.

Paper Jams

When <PAPER JAM> or <PAPER JAM/ OPEN REAR COVER> appears on the LCD display, remove jammed paper from the inside of the machine first, then from the paper feeding tray or multi-purpose feeder if necessary.

1 **Remove the dust cover from the paper feeding tray.**

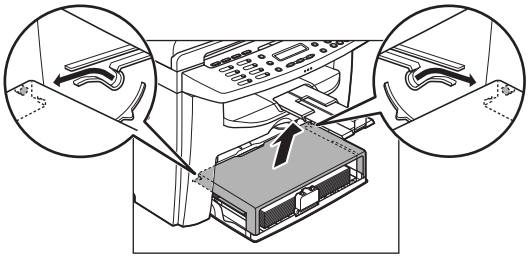

2 **Remove the paper in the paper feeding tray.**

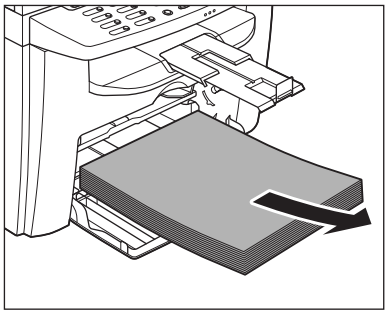

3 Open the rear cover.

This operation is required only when <PAPER JAM/OPEN REAR COVER> appears on the LCD display.

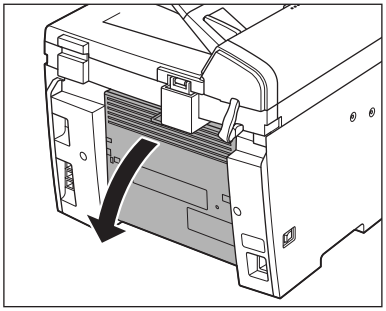

4 Lift the scanning platform until it is locked (A), and open the printer cover (B).

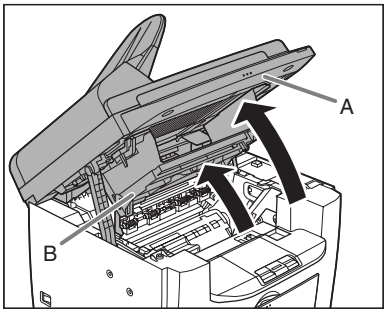

5 Remove the toner cartridge from the machine.

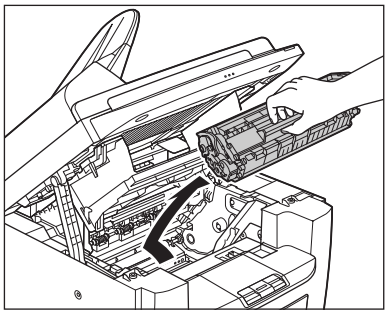

CAUTION

- Remove watches and any bracelets or rings when touching the inside of the machine. These items might be damaged if they come into contact with the parts inside of the machine.
- To avoid exposing the toner cartridge to light, place it in its protective bag or wrap it in a thick cloth.
- Do not open the drum protective shutter on the toner cartridge. Print quality may deteriorate if the drum surface is exposed to light or is damaged.

NOTE

Always hold the cartridge by its handle.

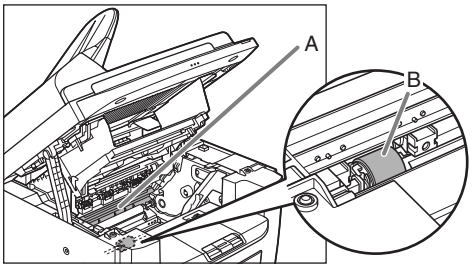

CAUTION

– Do not touch the fixing assembly (A) as it becomes very hot during use.
– Do not touch the transfer roller (B) as this can damage the machine.

6 **Hold both sides of the jammed paper and gently pull it out.**

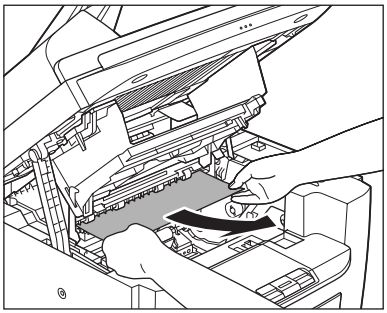

7 **Gently pull the jammed paper between the fixing assembly (A) and transfer roller (B) until the leading edge emerges from the machine.**

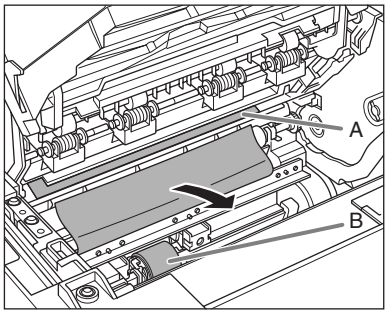

CAUTION

– Do not touch the fixing assembly (A) as it becomes very hot during use.
– Do not touch the transfer roller (B) as this can damage the machine.

8 **Hold both sides of the jammed paper and carefully pull it out.**

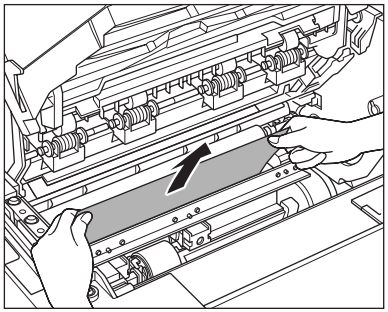

9 Hold both sides of the jammed paper and gently pull it out upward.

This operation is required only when <PAPER JAM/OPEN REAR COVER> appears on the LCD display.

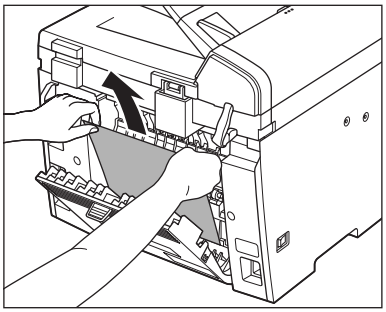

If the jammed paper is badly folded, similar to the folds of an accordion, ease the jammed paper loose and then pull it out from the machine.

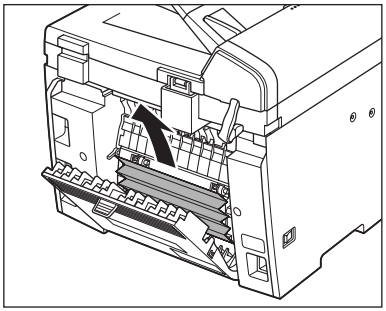

10 Hold both sides of the jammed paper and slowly pull it out in the direction of the arrow.

– When feeding paper from the paper feeding tray:

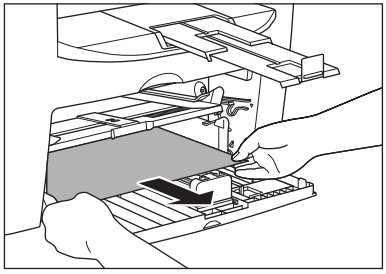

– When feeding paper from the multi-purpose tray:

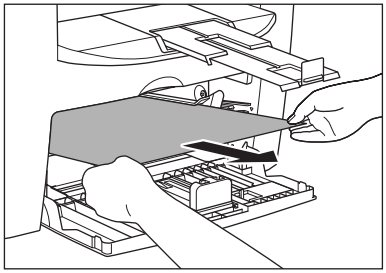

11 Hold the toner cartridge by its handle.

The arrow (A) on the toner cartridge should be facing away from you and pointing down.

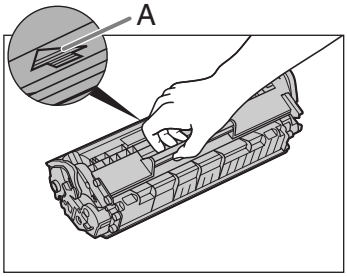

CAUTION

Do not open the drum protective shutter on the toner cartridge. Print quality may deteriorate if the drum surface is exposed to light or is damaged.

NOTE

Always hold the toner cartridge by its handle.

12 Insert the toner cartridge into the machine as far as it will go.

Align the guide (A) on the left side of the toner cartridge with the groove inside the machine.

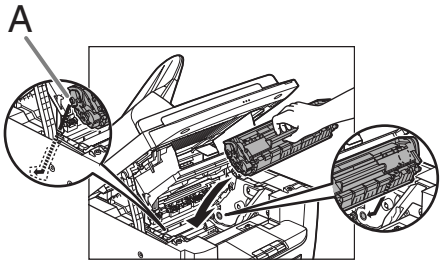

13 Push down the toner cartridge to make sure it is properly set in the machine.

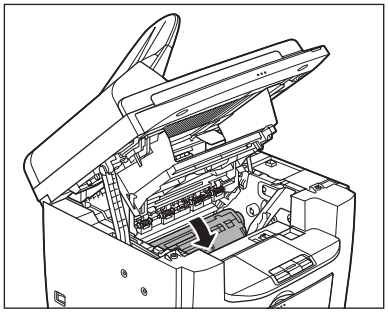

14 Close the printer cover and lower the scanning platform.

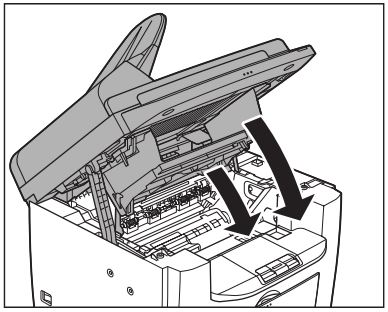

CAUTION

Be careful not to get your fingers caught.

15 Close the rear cover.

This operation is required only when <PAPER JAM/OPEN REAR COVER> appears on the LCD display.

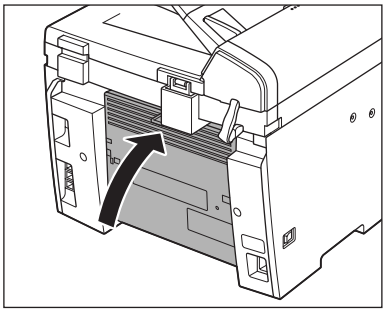

CAUTION

Be careful not to get your fingers caught.

16 Load the paper into the paper feeding tray.

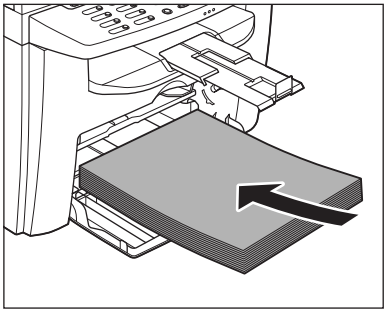

17 Set the dust cover on the paper feeding tray.

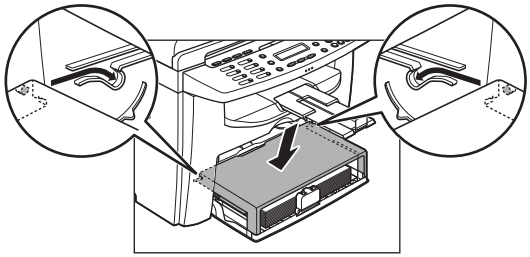

NOTE

After all the procedures are completed, the machine should be ready for operating. If the machine returns to the standby mode, troubleshooting has been successful. If the machine does not return to the standby mode, check if jammed paper is still left in the machine.

LCD Messages

See the table below when the LCD displays error messages.

Common

Message	Description	Action
CANCEL : STOP/RESET	Appears alternately with other messages.	Varies by the message that appears. For details, see the explanation for the message (i.e., <LOAD CORRECT PAPER>). To cancel copy jobs, press [Stop/Reset], then press [◄–].

Message	Description	Action
CHANGE REG'D SIZE -> PAPER SETTINGS	The paper size selected in <CASSETTE> or <MP TRAY> of the <PAPER SETTINGS> menu is not correct.	– For printing received documents, reports, or lists, set the paper size to <A4>, <OFICIO>, <BRAZIL-OFICIO>, <MEXICO-OFICIO>, <FOLIO>, <GOVERNMENT-LETTER>, <GOVERNMENT-LEGAL>,<FOOLSCAP>, <LTR> or <LGL> in <CASSETTE> of the <PAPER SETTINGS> menu. (See "Setting Paper Size and Type," on p. 3-7.) – For the two-sided printing for faxing, set the paper size to <A4> or <LTR> in <CASSETTE> of the <PAPER SETTINGS> menu. (See "Setting Paper Size and Type," on p. 3-7.) – For the two-sided copying, set the paper size to <A4> or <LTR> in <CASSETTE> or <MP TRAY> of the <PAPER SETTINGS> menu. (See "Setting Paper Size and Type," on p. 3-7.)
CHECK DOCUMENT*	A document jam may have occurred in the ADF.	Remove the jammed document.

* MF4150 Only

Message	Description	Action
CLOSE COVER **PRINTER COVER**	The printer cover is not closed completely.	Check the printer cover, and make sure that it is completely closed.
LIFT PANEL TO OPEN **OPEN PRINTER COVER**	Appears alternately with other messages.	Varies by the message that appears. For details, see the explanation for the message (i.e., <OUT OF TONER/ CHANGE TONER>).
LOAD CORRECT PAPER	The size of the paper in the paper feeding tray or multi-purpose tray is different from that of the paper specified in <CASSETTE> or <MP TRAY> of the <PAPER SETTINGS> menu.	– Load the correct paper size or change the paper size in <CASSETTE> or <MP TRAY> of the <PAPER SETTINGS> menu. For more information, see “Setting Paper Size and Type,” on p. 3-7. – If you are trying to print a report or list, set the paper size to <A4>, <OFICIO>, <BRAZIL-OFICIO>, <MEXICO-OFICIO>, <FOLIO>, <GOVERNMENT-LETTER>, <GOVERNMENT-LEGAL>, <FOOLSCAP>, <LTR> or <LGL> and then load paper of the same size. Then press [OK] to continue printing.

Message	Description	Action
LOAD PAPER	No paper is loaded in the paper feeding tray or multi-purpose tray, or not inserted correctly.	Load paper in the paper feeding tray or multi-purpose tray. (See “Loading Paper,” on p. 3-4.) Make sure the paper stack in the paper feeding tray does not exceed the capacity of the paper feeding tray. Load paper in the multi-purpose tray one by one. If you load paper while making copies, do not load a different paper size. On the second line in the LCD the message <CASSETTE> or <MP TRAY> and the paper size may appear. In this case, load the corresponding paper in the paper feeding tray or multi-purpose tray.
LOST IMAGE*	The data in memory was lost when the machine was turned on.	The error is automatically released after two seconds, and the machine automatically prints out the lost report that shows the records still existing in the activity report.

Message	Description	Action
MEMORY FULL	– The number of the scanned document that can be stored in memory reached the maximum. – The machine's memory is full of scanned documents when you use the sort copy function.	Divide the document and copy each part separately.
OUT OF TONER **CHANGE TONER***	– The toner cartridge is almost empty. – If <CONT. PRINTING> is set to <OFF> in the <PRINTER SETTINGS> of the <FAX SETTINGS> menu, the Fax printing and printing reports are interrupted when the <OUT OF TONER/ CHANGE TONER> appears.	– Replace with a new toner cartridge. – If you want to continue printing without replacing the toner cartridge, set <CONT. PRINTING> to <ON> in the <PRINTER SETTINGS> of the <FAX SETTINGS> menu. However, the toner cartridge is almost empty, so you should replace the toner cartridge with a new one.
PAPER JAM	Paper jams have occurred in the machine.	Clear the paper jam (See "Clearing Jams," on p. 11-1.) and reload paper in the paper feeding tray or multi-purpose tray. Then reset the machine by opening the printer cover and then closing it.

Message	Description	Action
PAPER JAM **OPEN REAR COVER**	Paper jams have occurred in the machine when making two-sided coping or two-sided printing.	Clear the paper jam (See “Clearing Jams,” on p. 11-1.) and reload paper in the paper feeding tray or multi-purpose tray. Then reset the machine by opening the printer cover and then closing it.
PLEASE WAIT	This message appears when the main power switch is turned on or when the machine is not ready for printing.	Wait until the message disappears.
REMOVE MP PAPER*	Paper is loaded in the multi-purpose tray.	Remove the paper from the multi-purpose tray. The machine will not print faxes, reports, or lists when paper is loaded in the multi-purpose tray. They will be stored in memory.
RESUME : OK	Appears alternately with other messages.	Varies by the message that appears. For details, see the explanation for the message (i.e., <LOAD PAPER>).

*MF4140/MF4150 Only

Message	Description	Action
SYSTEM ERROR EXXX	A system error has occurred. <XXX> will be a three-digit code that indicates a particular type of error.	Turn off the main power switch. Wait for at least five seconds, and then turn it on again. If the message persists, contact your local authorized Canon dealer or the Canon help line.
TONER IS NOT SET INSERT TONER	A toner cartridge is not installed or not installed correctly.	Install the toner cartridge correctly. (See “Replacing the Toner Cartridge,” on p. 10-8.)
WRONG NUMBER ENTRY*	An invalid number was entered in the <DATE&TIME SETTING> of the <TIMER SETTINGS> menu.	Enter a correct date or time.

Facsimile (MF4140/MF4150 Only)

Message	Description	Action
ALREADY REGISTERED	The same recipient was entered twice.	Select a different recipient.
CANNOT REGIST MORE	– Maximum number of recipients (123) were entered for broadcasting. – Maximum number of recipients (50) were registered for group dialing.	– Resend the document to other recipients if necessary. – Register a different one-touch speed dialing key for group dialing.
CANNOT USE THIS KEY	Redialing is not available with [Redial/Pause]. This message appears when <RESTRICT REDIAL> is set to <ON> in the <TX SETTINGS> of the <FAX SETTINGS> menu.	Dial the number manually.
CHECK TEL NUMBER	The fax number entered at the second time is different from the one entered at the first time. This message appears when <CONFIRM NEW DEST.> is set to <ON> in the <TX SETTINGS> of the <FAX SETTINGS> menu.	Check if the fax number is correct, then enter the same fax number as the first one after pressing [Start].
HANG UP PHONE	The optional handset or external telephone is off the hook.	Hang up the optional handset or the external telephone.

Message	Description	Action
MEMORY FULL	– The memory becomes full during sending or receiving the fax. – The number of fax jobs that can be stored in memory reached the maximum.	– When sending the document, divide it into a few parts or select a lower fax resolution. If you need more space, wait for the machine to send any remaining faxes. – The machine memory can store up to 256 fax jobs including sending and receiving jobs. (Based on the condition that the other party sends the fax by the imageCLASS MF4100 Series with ITU-T Standard Chart No.1, standard mode); Wait for the machine to send any faxes in memory. Also print or delete any documents in memory.
NOT AVAILABLE	You pressed the one-touch speed dialing key that has already been registered, when you specify a one-touch speed dialing key as the group dial.	Check the information registered under the one-touch speed dialing before using.

Message	Description	Action
NOT REGISTERED	No recipient is registered in the selected speed dialing key or code.	Select a registered key or code. For more information, “Registering One-Touch Speed Dialing,” on p. 4-7 or “Registering Coded Dialing,” on p. 4-14.
RECEIVED IN MEMORY	The received fax documents or the reports are in memory because paper or toner ran out, paper jams occurred, or incorrect paper size was loaded.	Load correct paper size in the paper feeding tray, replace the toner cartridge, or clear the paper jams. For more information, see the following: – “Loading Documents,” on p. 2-4. – “Replacing the Toner Cartridge with a New One,” on p. 10-10. – “Clearing Jams,” on p. 11-1.
REGISTERING KEY CANNOT REGISTER	The selected one-touch speed dialing key is already used as the group dialing key it is being assigned to.	Select a different one-touch speed dialing key.

Printer

Message	Description	Action
CANCEL : SYS.MONITOR	Appears alternately with other messages.	Varies by the message that appears. For details, see the explanation for the message (i.e., <LOAD CORRECT PAPER>). To cancel printing from a computer, see Chapter 3, "System Monitor," in the Advanced Guide.
PRINTER DATA ERROR CHECK PRINTER	The data from the PC was not printed.	Check if the software is installed properly or if the printer cable is properly connected.
PRINTING	The printer is processing a print job.	No action required. Wait for printing to finish.

Error Codes (MF4140/MF4150 Only)

An error code is a four-digit code displayed in the bottom row of a TX Report or an RX Report when an error occurs.

Ex.

JOB NO.	TYPE	NO.	DESTINATION TEL/ID	DATE	TIME	PAGE	TIME USE	MODE	RESULT
0001	TX	001	WEST-1 55555555	04/10	16:00	002	02'21	ECM	NG
			00A0 TX CANCEL						

Error Code

For details on TX Report and RX Report, see Chapter 4, “Reports and Lists (MF4140/MF4150 Only),” in the Advanced Guide.

See the table below for individual error codes.

Error Code	Description	Action
0001	The sender may not be using a G3 fax machine.	Make sure the sender’s machine is compatible with your machine.
0070	Reception was manually canceled on the machine.	Ask the sender to resend the document if necessary.
0071	The machine’s memory is full.	Print, send, or delete any documents stored in memory.
0080	The recipient’s machine did not respond within 35 seconds.	Resend the document. Ask the other party to check their machine. If you are making an overseas call, add a pause to the number.
008D	The recipient’s machine has run out of paper.	Ask the recipient to make sure that paper is loaded in their machine.

Error Code	Description	Action
00A0	Transmission was manually canceled on the machine.	Resend the document if necessary.
00A1	There is a document jam.	Clear the document jam.
00FF	All redialing attempts have failed.	Check if the recipient's number is correct or the telephone cable is properly connected, and try again.

If You Cannot Solve a Problem

If you cannot solve the problem after having referred to the information in this chapter, contact your local authorized Canon dealer or the Canon help line. Please have the following information ready when you contact Canon:

– Product name (imageCLASS MF4122/MF4140/MF4150)
– Serial number (On the label located at the back of the machine)
– Place of purchase
– Nature of problem
– Steps you have taken to solve the problem and the results

CAUTION

If the machine makes strange noises, emits smoke or odd odor, turn off the main power switch immediately, disconnect the power cord, and contact your local authorized Canon dealer or the Canon help line. Do not attempt to disassemble or repair the machine yourself.

NOTE

Attempting to repair the machine yourself may void the limited warranty.

12 Machine Settings

Machine Settings

You can adjust the machine settings from the Setting Menu to customize the way the machine works. To see the list of current settings, print out User's Data List.

Printing User's Data List (MF4140/MF4150 Only)

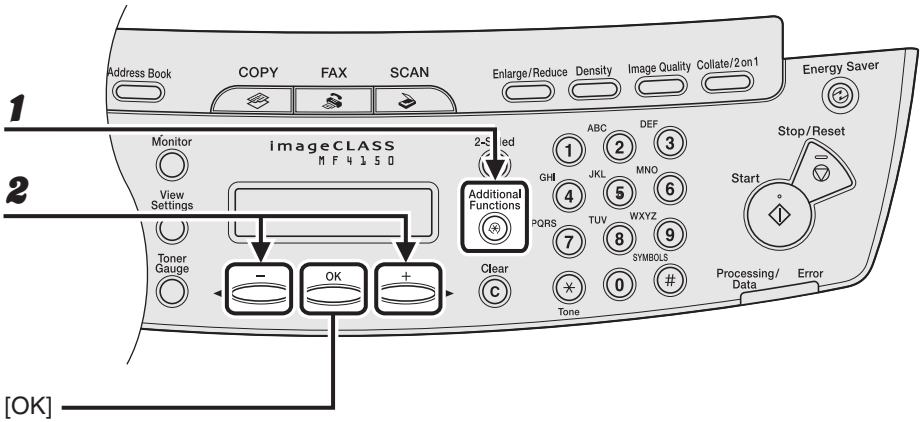

1 **Press [Additional Functions].**

2 **Press [◄ –] or [+ ►] to select <REPORT SETTINGS>, then press [OK].**

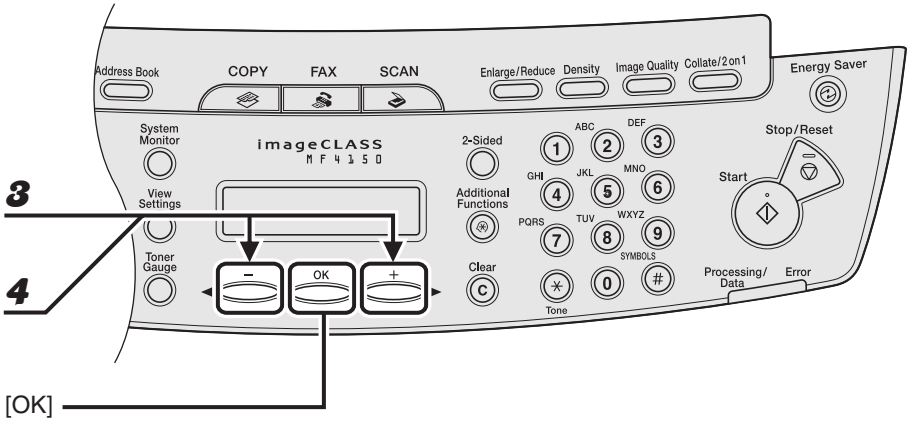

3 **Press [◄ –] or [+ ►] to select <LIST PRINT>, then press [OK].**

4 **Press [◄ –] or [+ ►] to select <USER'S DATA LIST>, then press [OK].**

Accessing the Setting Menu

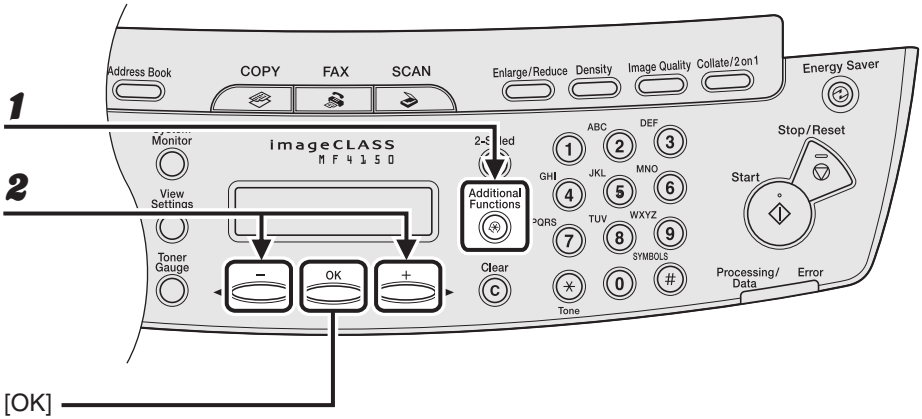

1 **Press [Additional Functions].**

2 **Press [◄ –] or [+ ►] to select the menu you want to access, then press [OK].**

<PAPER SETTINGS>
<COMMON SETTINGS>
<COPY SETTINGS>
<TIMER SETTINGS>
<FAX SETTINGS>*
<BROADCAST>*
<ADDRESS BOOK SET.>*
<ADJUST./CLEANING>
<REPORT SETTINGS>*

* MF4140/MF4150 Only

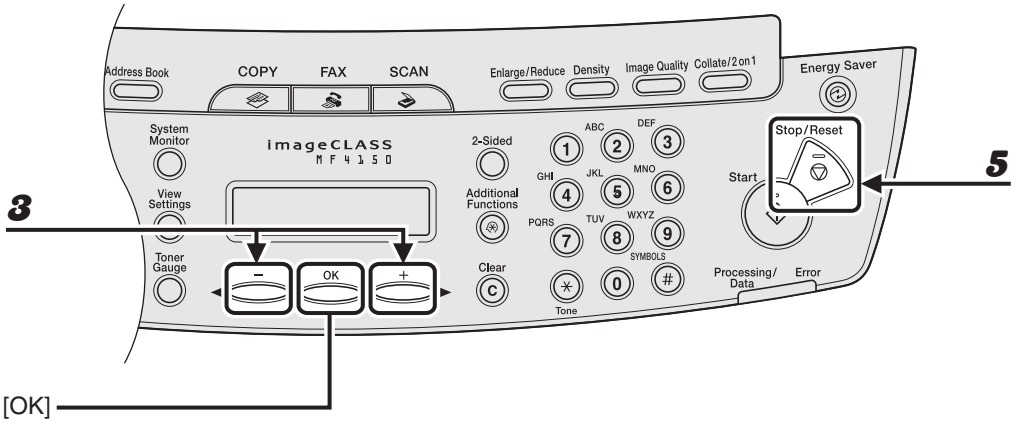

3 **Press [◄ –] or [+ ►] to select a submenu, then press [OK].**

4 **To register the settings or go to a submenu item, press [OK].**

5 **When finished, press [Stop/Reset] to return to the standby mode.**

NOTE

Press [Stop/Reset] to exit from the menu. If you press [Stop/Reset] before pressing [OK], the setting will not be registered.

Setting Menu

NOTE

– Depending on the country of purchase, some settings may not be available.
– The menus described in this section are based on the model MF4150. Depending on the model of your machine, some settings may not be available and the number on the top of each menu may vary.

PAPER SETTINGS	
Setting Item	**Description**
1 CASSETTE	Sets the paper type and size on the paper feeding tray. (See “Setting Paper Size and Type,” on p. 3-7.)
2 MP TRAY	Sets the paper type and size on the multi-purpose tray. (See “Setting Paper Size and Type,” on p. 3-7.)

COMMON SETTINGS	
Setting Item	**Description**
1 DEFAULT SETTINGS	Selects which standby display appears when the main power switch is turned on. – COPY – FAX* – SCAN
2 TONER SAVER MODE	Sets whether to reduce toner consumption. – OFF – ON
3 DISPLAY LANGUAGE	Selects the language on the display. (See “Specifications,” on p. 13-1.)

COMMON SETTINGS	
4 VOLUME CONTROL*	Sets volumes for machine beeps in four levels. – NORMAL – HIGH – OFF – LOW
CALLING TONE	Sets the calling volume.
MONITOR VOL. CTRL	Sets the line monitor volume.
ENTRY TONE	Sets the keypad volume.
ERROR TONE	Sets the alarm volume.

*MF4140/MF4150 Only

COPY SETTINGS	
Setting Item	**Description**
1 STANDARD SETTINGS	Sets the default setting for copying.
DENSITY	Sets the density for copying. – MANUAL (1-9) – AUTO* * When <AUTO> is set, the Image Quality mode is automatically set to <TEXT>.
IMAGE QUALITY	Sets the document type for copying. – TEXT/PHOTO* – TEXT – PHOTO* – TEXT/PHOTO+* * When <TEXT/PHOTO>, <PHOTO>, or <TEXT/PHOTO+> is set, the Density mode is automatically set to <MANUAL>.
AUTO COLLATE	Sets whether to collate the copies automatically. – OFF – ON

COPY SETTINGS	
2 - SIDED	Sets the type of two-sided printing. – OFF – ON
2 PAPER SIZE GROUP	Selects a paper size group for your machine.* – AB – INCHES – A * If the paper size group is changed, the available preset copy ratios will also change.

TIMER SETTINGS	
Setting Item	**Description**
1 AUTO SLEEP	Sets the auto sleep mode when the machine remains idle for a certain period of time. (3MIN.-30MIN.) (See “Setting the Sleep Mode,” on p. 1-14.) – ON – OFF
2 DATE&TIME SETTING*	Sets the current date and time. (See “Connect Power Cord ,” in the Starter Guide.)
3 DATE TYPE SELECT*	Sets the date format. – DD/MM YYYY – YYYY MM/DD – MM/DD/YYYY
4 DAYLIGHT SV. TIME*	Sets the daylight saving time mode. (See “Setting Daylight Saving Time (MF4140/MF4150 Only),” on p. 1-17.) – ON – OFF

*MF4140/MF4150 Only

FAX SETTINGS (MF4140/MF4150 Only)	
Setting Item	**Description**
1 BASIC SETTINGS	Registers your fax number, name, and country.
UNIT TELEPHONE #	Registers your fax number. (See “Set the Machine for Sending Faxes (MF4140/MF4150 Only),” in the Starter Guide.)
UNIT NAME	Registers your name/company name. (See “Set the Machine for Sending Faxes (MF4140/MF4150 Only),” in the Starter Guide.)
COUNTRY SELECT	Registers your country.
TX TERMINAL ID	Sets whether to show the sender information on each page sent. – ON* – OFF *When <ON> is set, the information registered in <UNIT TELEPHONE #> and <UNIT NAME> are shown on each page sent.
STANDARD SETTINGS	Sets the default setting for faxing.
DENSITY	Sets the default density for faxing. (1-9)
IMAGE QUALITY	Sets the default image quality for faxing. – STANDARD – FINE – PHOTO – SUPER FINE

FAX SETTINGS (MF4140/MF4150 Only)	
2 TX SETTINGS	Sets the transmission functions.
AUTO REDIAL	Sets whether to redial automatically when the other line is busy or a transmission error occurs. (See Chapter 1, “Advanced Fax Features (MF4140/MF4150 Only),” in the Advanced Guide.)
ON	Customizes the redial operation.
REDIAL TIMES	Sets the number of retries. (1 TIMES-10 TIMES)
REDIAL INTERVAL	Sets period of time before redialing. (2 MIN.-99 MIN.)
OFF	After the first attempt at dialing fails, redialing is not attempted.
DIALING LINE CHCK	Sets whether to check the telephone line condition. – OFF – ON
RESTRICT REDIAL	Sets whether to disable the redial function of the [Redial/Pause] key. – OFF – ON
CONFIRM NEW DEST.	Sets whether to prompt you to enter the fax number again after pressing [Start] key. – OFF – ON

FAX SETTINGS (MF4140/MF4150 Only)	
3 RX SETTINGS	Sets the reception functions.
INCOMING RING	Sets whether the telephone rings when it receives a voice call, enabling you to answer the call. This function is only available when the <RX MODE> is set to <FaxOnly>.
OFF	The telephone does not ring when it receives a voice call.
ON	The telephone rings when it receives a voice call if the optional handset or an external telephone is connected.
RING COUNT	Sets the number of incoming ring before the machine answers. (1 TIMES-16 TIMES)
RX PRINT	Sets whether to store all received pages in memory before printing them out or print each page as it is received. (See Chapter 1, “Advanced Fax Features (MF4140/MF4150 Only),” in the Advanced Guide.)
MEMORY RX	Print after all the pages of the document are received.
PRINT RX	Print each page as it is received.
RX MODE	Selects the receive mode. (See Chapter 1, “Advanced Fax Features (MF4140/MF4150 Only),” in the Advanced Guide.) – FaxOnly – AnsMode – NET SWITCH – FaxTel – MANUAL
RX TERMINAL ID	Sets whether to insert the machine’s fax number and the sender information on received faxes. – OFF – ON

FAX SETTINGS (MF4140/MF4150 Only)	
RX RESTRICTION	You can reject faxes from senders with no fax/telephone number in their sender information. (See Chapter 1, “Advanced Fax Features (MF4140/MF4150 Only),” in the Advanced Guide.)
OFF	All receptions are conducted.
ON	Receives the fax only from the sending fax machine that sends the TSI signal.
REMOTE RX	Sets whether to use remote receiving. (See Chapter 1, “Advanced Fax Features (MF4140/MF4150 Only),” in the Advanced Guide.) – ON – OFF
4 PRINTER SETTINGS	Sets the printer functions.
RX REDUCTION	Sets whether to reduce or truncate the image when a faxed page is larger than the size of paper loaded. (See Chapter 1, “Advanced Fax Features (MF4140/MF4150 Only),” in the Advanced Guide.)
ON	Reduces the image to fit on the size of paper loaded.
OFF	Retains the original size of the image.
CUT	The image that is larger than 1-page record area is cut and not recorded.
CONT. PRINTING	Sets whether to continue printing when toner has run out. This function is only for Fax printing and printing reports. (See Chapter 5, “Troubleshooting,” in the Advanced Guide.) – OFF – ON

FAX SETTINGS (MF4140/MF4150 Only)	
2 - SIDED PRINT	Sets the type of two-sided printing for faxing. (See Chapter 1, “Advanced Fax Features,” in the Advanced Guide.) – OFF – ON
5 COMMUNICATIONS	Sets the communication setting.
TEL LINE TYPE	Selects the telephone line type. (See “Set the Machine for Sending Faxes (MF4140/MF4150 Only),” in the Starter Guide.)
TOUCH TONE	The telephone line is set for touch tone dialing.
ROTARY PULSE	The telephone line is set for rotary pulse dialing.
R-KEY SETTING	Registers the [R] key to access an outside line easily. (See Chapter 1, “Advanced Fax Features (MF4140/MF4150 Only),” in the Advanced Guide.) – PSTN – PBX

BROADCAST (MF4140/MF4150 Only)	
Setting Item	**Description**
BROADCAST	Registers destinations for broadcasting.

ADDRESS BOOK SET. (MF4140/MF4150 Only)	
Setting Item	**Description**
1 1-TOUCH SPD DIAL	Registers the information on one-touch speed dialing. Up to 7 destinations can be registered. (See “Registering One-Touch Speed Dialing,” on p. 4-7.)
NAME	Registers the recipient’s name (max. 20 characters, including spaces).
TEL NUMBER ENTRY	Registers the recipient’s fax number (max. 50 digits, including spaces).
2 CODED DIAL	Registers the information on coded dialing. Up to 100 destinations can be registered. (See “Registering Coded Dialing,” on p. 4-14.)
NAME	Registers the recipient’s name (max. 20 characters, including spaces).
TEL NUMBER ENTRY	Registers the recipient’s fax number (max. 50 digits, including spaces).
3 GROUP DIAL	Registers the information on group dialing. Up to 50 destinations can be registered. (See “Registering Group Dialing,” on p. 4-21.)
NAME	Registers the group name (max. 20 characters, including spaces).

ADJUST./CLEANING	
Setting Item	**Description**
1 FIX.UNIT CLEANING	Cleans the fuser roller. (See “Fuser Roller,” on p. 10-4.)
2 SPECIAL MODE T	Sets whether to prevent blur from appearing on the printouts. When this setting is set to <on>, the density of printouts may become light. – OFF – ON
3 SPECIAL MODE U	Select to improve print quality in high temperature and high humidity conditions or in low temperature and low humidity conditions.
OFF	Select in normal condition.
MODE1	Select to improve print quality in low temperature and low humidity conditions, or when using thick paper or an envelope.
MODE2	Select to improve print quality in high temperature and high humidity conditions.
4 SPECIAL MODE V	Sets whether to prevent small size paper (B5, A5, EXECUTIVE, etc) from being curled. – OFF – ON

REPORT SETTINGS (MF4140/MF4150 Only)	
Setting Item	**Description**
1 SETTINGS	Sets the report functions. (See Chapter 4, “Reports and Lists (MF4140/MF4150 Only),” in the Advanced Guide.)
TX REPORT	Sets whether the fax transmission report prints out. – PRINT ERROR ONLY – OUTPUT NO – OUTPUT YES
RX REPORT	Sets whether the fax reception report prints out. – OUTPUT NO – OUTPUT YES – PRINT ERROR ONLY
ACTIVITY REPORT	Sets whether to automatically print the fax transaction report. – OUTPUT YES – OUTPUT NO
2 LIST PRINT	Prints reports/lists.
TX REPORT	Prints the fax transmission report manually.
RX REPORT	Prints the fax reception report manually.
ACTIVITY REPORT	Prints the fax transaction report manually.
MEMORY DATA LIST	Prints the list of the reserved jobs in memory.
MEMORY IMAGE PRNT	Prints the information and image of the first page of the reserved job.
1-TOUCH LIST	Prints the list of fax/telephone numbers and names registered for one-touch speed dialing.
CODED DIAL LIST	Prints the list of fax/telephone numbers and names registered for coded dialing.
GROUP DIAL LIST	Prints the list of groups registered for group dialing.
USER’S DATA LIST	Prints the setting list registered in the menu. (See “Printing User’s Data List (MF4140/MF4150 Only),” on p. 12-1.)

13 Appendix

Specifications

General	
● **Type**	Personal Desktop
● **Power Source**	220-240V, 50/60 Hz (Power requirements differ depending on the country in which you purchased the product.)
● **Power Consumption**	Max: Less than 710 W
● **Warm-up Time**	Less than 9.0 sec.* (temperature: 20°C, humidity: 65%; from when the main power switch is turned on until standby display appears) * Warm-up time may differ depending on the condition and environment of the machine.
● **Weight**	MF4150: Approx. 13.4 kg (including toner cartridge) MF4122/MF4140: Approx. 12.4 kg (including toner cartridge)

General	
● **Dimensions**	MF4150: 390 mm (W) × 432 mm (D) × 370 mm (H) (with the document feeder tray attached) MF4122/MF4140: 390 mm (W) × 432 mm (D) × 303 mm (H)
● **Installation Space**	MF4150: 673 mm (W) × 855 mm (D) (including optional handset) MF4140: 673 mm (W) × 830 mm (D) (including optional handset) MF4122: 590 mm (W) × 830 mm (D)
● **Environmental Conditions**	Temperature: 7.5°C–35°C Humidity: 5%–90% RH
● **Display Languages**	ENGLISH / GERMAN / FRENCH / SPANISH / ITALIAN / SWEDISH / NORWEGIAN / DUTCH / FINNISH / DANISH / PORTUGUESE / CZECH / SLOVENE / HUNGARIAN / RUSSIAN / TURKISH / POLISH

General	
● **Acceptable Documents**	» p. 2-1.
● **Acceptable Paper Stock**	» p. 3-1.
● **Printable Area**	» p. 3-2.
● **Scanning Area**	» p. 2-3.

Copier	
● **Scanning Resolution**	TEXT/PHOTO mode: 300 dpi × 300 dpi TEXT mode, PHOTO mode, TEXT/PHOTO+ mode: 600 dpi × 600 dpi
● **Printing Resolution**	600 dpi × 600 dpi
● **Magnification**	1 ± 1.0%, 1:2.00, 1:1.41, 1:0.70, 1:0.50 Zoom 0.50 - 2.00, 1% increments
● **First Copy Time**	Platen glass: less than 9 sec. (A4)
● **Copy Speed**	Direct: A4 20 cpm
● **No. of Copies**	Max. 99 copies

Printer	
● **Printing Method**	Indirect electrostatic method (On-demand fixing)
● **Paper Handling**	– Paper feeding tray: 250 sheets (Height: max. 25 mm) – Multi-purpose tray: 1 sheet
● **Paper Delivery**	100 sheets (64 to 80 g/m^2)
● **Print Speed**	See “Copy Speed,” on p. 13-3.
● **Printing Resolution**	600 dpi × 600 dpi
● **Number of Tones**	256
● **Toner Cartridge**	» p. 1-11.

Facsimile (MF4140/MF4150 Only)	
● **Applicable Line**	Public Switched Telephone Network (PSTN)*1
● **Compatibility**	G3
● **Data Compression Schemes**	MH, MR, MMR
● **Modem Speed**	33.6 Kbps Automatic fallback
● **Transmission Speed**	Approx. 3 seconds/page*2 at 33.6 Kbps, ECM-MMR, transmitting from the memory
● **Transmission/ Reception Memory**	Maximum approx. 256 pages*2 (total pages of transmission/reception)
● **Fax Resolution**	STANDARD: 8 pels/mm × 3.85 lines/mm FINE: 8 pels/mm × 7.7 lines/mm PHOTO: 8 pels/mm × 7.7 lines/mm SUPER FINE: 8 pels/mm × 15.4 lines/mm

Facsimile (MF4140/MF4150 Only)	
● **Dialing**	– Speed dialing One-touch speed dialing (7 destinations) Coded dialing (100 destinations) Group dialing (50 destinations) Address Book dialing (with Address Book key) – Regular dialing (with numeric keys) – Automatic redialing – Manual redialing (with Redial/Pause key) – Sequential broadcast (123 destinations) – Automatic reception – Remote reception by telephone (Default ID: 25) – ACTIVITY REPORT (after every 60 transactions) – TX (Transmission)/RX (Reception) REPORT – TTI (Transmit Terminal Identification)

Telephone (MF4140/MF4150 Only)	
● **Connection**	– Optional handset – External telephone/answering machine/data modem

*1 The Public Switched Telephone Network (PSTN) currently supports 28.8 Kbps modem speed or lower, depending on telephone line conditions.

*2 Based on ITU-T Standard Chart No. 1, MMR standard mode.

NOTE

Specifications are subject to change without notice.

Index

Symbols & Numerics

[2-Sided] key 1-4, 1-6

A

Accessing
- Setting menu 12-3

[Additional Functions] key 1-4, 1-6

[Address Book] key 1-8

ADDRESS BOOK SET. 12-3, 12-13

ADF 2-6

ADF (Automatic Document Feeder) 1-1

ADJUST./CLEANING 12-3, 12-14

B

BROADCAST 12-3, 12-12

C

CHANGE TONER message 10-8

Cleaning machine 10-1
- Exterior 10-1
- Fuser roller 10-4
- Interior 10-2
- Scanning area 10-5

[Clear] key 1-5, 1-7

Clearing Jams 11-1
- Document jams 11-1
- Paper jams 11-3

[Coded Dial] key 1-8, 4-31

Coded dialing 4-6
- Deleting 4-19
- Editing 4-16
- Registering 4-14
- Using 4-31

[Collate/2 on 1] key 1-4, 1-6

COMMON SETTINGS 12-3, 12-5

[COPY] key 1-4, 1-6

Copy Mode 1-9

COPY SETTINGS 12-3, 12-6

Copying 6-1

D

Daylight saving time 1-17

Density
- Copying 6-4
- Faxes 4-5

[Density] key 1-4, 1-6

Document
- Jams 11-1
- Loading 2-4
- Requirements 2-1

Document delivery tray 1-1

Document feeder tray 1-1

Dust cover 1-2

E

[Energy Saver] key 1-4, 1-6

[Enlarge/Reduce] key 1-4, 1-6

Error codes 11-20

Error indicator 1-5, 1-7

Error messages

- Common 11-9
- Facsimile 11-16
- Printer 11-19

External device jack 1-3

F

[FAX] key 1-4

Fax Mode 1-9

FAX SETTINGS 12-3, 12-8

Faxes

- Receiving 5-1
- Sending 4-1

G

Group dialing 4-6

- Adding destination 4-23
- Changing name 4-26
- Deleting destination 4-24
- Deleting group 4-28
- Registering 4-21
- Using 4-30

H

Handset 1-10

Handset jack 1-3

[Hook] key 1-8, 4-33

I

If You cannot solve a problem 11-22

Image quality

- Copying 6-3
- Faxes 4-3

[Image Quality] key 1-4, 1-6

J

Jams

- Document 11-1
- Paper 11-3

L

LCD 1-5, 1-7, 1-9

- Messages 11-9

Loading

- Document 2-4
- Envelopes 3-4
- Paper 3-4

M

Machine components 1-1

Machine settings 12-1

Main power switch 1-2

Maintaining

- Toner cartridge 1-12

Maintenance 10-1

Manual Sending 4-32

Menu

- Accessing 12-3
- Setting 12-5

Multi-purpose tray 1-2, 3-4

N

Numeric keys 1-5, 1-7

O

[OK] key 1-5, 1-7
One-Touch Speed Dial keys 1-8
One-touch speed dialing 4-6
  Deleting 4-12
  Editing 4-9
  Registering 4-7
  Using 4-30
Operation panel 1-1, 1-4
OUT OF TONER message 10-8
Output tray 1-1
Output tray extension 1-2

P

Paper
  Guidelines 3-3
  Jams 11-3
  Loading 3-4
  Printable area 3-2
  Requirements 3-1
  Size and type 3-7
Paper feeding tray 1-1
Paper guide rail 1-2
PAPER JAM message 11-3
PAPER SETTINGS 12-3, 12-5
Paper stopper 1-2
PC Faxing 9-1
Platen glass 1-2, 2-4
Platen glass cover 1-1
Power socket 1-3
Printing 7-1
Processing/Data indicator 1-5, 1-7

R

[R] key 1-8
Rear cover 1-3
Receiving faxes 5-1
[Redial/Pause] key 1-8
Redistributing toner 10-8
Registering speed dialing 4-6
Replacing toner cartridge 10-8
REPORT SETTINGS 12-3, 12-15
RX SETTINGS 12-10

S

[SCAN] key 1-4, 1-6
Scan Mode 1-9
Scan settings
  Copying 6-3
  Faxes 4-3
Scanning 8-1
Scanning area 1-2, 2-3
Scanning platform 1-2
Sending faxes 4-1
Setting Menu 12-5
  Accessing 12-3

Sleep Mode 1-14
Slide guides 1-1, 2-6
for multi-purpose tray 1-2
Specifications 13-1
Copier 13-3
Facsimile 13-4
General 13-1
Printer 13-4
Telephone 13-5
Speed dialing 4-6
Standby mode
Copy 1-9
Fax 1-9
Scan 1-9
[Start] key 1-5, 1-7
[Stop/Reset] key 1-5, 1-6
[System Monitor] key 1-4, 1-6

T

Telephone line jack 1-3
TIMER SETTINGS 12-3, 12-7
Timer settings 1-14
[Tone] key 1-5
Toner cartridge 1-11
Checking the toner level 1-13
Maintaining 1-12
Redistributing 10-8
Replacing 10-10
[Toner Gauge] key 1-5, 1-7
Transporting machine 10-12
Troubleshooting 11-1
TX SETTINGS 12-9

U

USB port 1-3
User's Data List 12-1
Printing 12-1
Using speed dialing 4-30

V

[View Settings] key 1-4, 1-6

Z

Zoom ratio 6-6
Preset zoom 6-6
Zoom designation 6-7

CANON INC.
30-2, Shimomaruko 3-chome, Ohta-ku, Tokyo 146-8501, Japan

CANON U.S.A., INC.
One Canon Plaza, Lake Success, NY 11042, U.S.A.

CANON CANADA INC.
6390 Dixie Road Mississauga, Ontario L5T 1P7, Canada

CANON EUROPA N.V.
Bovenkerkerweg 59-61 1185 XB Amstelveen, The Netherlands

CANON FRANCE S.A.S.
17, quai du Président Paul Doumer 92414 Courbevoie Cedex, France

CANON COMMUNICATION & IMAGE FRANCE S.A.S.
12, rue de l'Industrie 92414 Courbevoie Cedex, France

CANON (U.K.) LTD.
Woodhatch, Reigate, Surrey, RH2 8BF, United Kingdom

CANON DEUTSCHLAND GmbH
Europark Fichtenhain A10, 47807 Krefeld, Germany

CANON ITALIA S.p.A.
Via Milano, 8 20097 San Donato Milanese (MI) Italy

CANON ESPAÑA, S.A.
c/ Joaquín Costa 41, 28002 Madrid, Spain

CANON LATIN AMERICA, INC.
703 Waterford Way Suite 400, Miami, Florida 33126 U.S.A.

CANON AUSTRALIA PTY. LTD
1 Thomas Holt Drive, North Ryde, Sydney, N.S.W. 2113, Australia

CANON CHINA CO., LTD
15F Jinbao Building No.89 Jinbao Street, Dongcheng District, Beijing 100005, China

CANON SINGAPORE PTE. LTD.
1 HarbourFront Avenue #04-01 Keppel Bay Tower, Singapore 098632

230V

FT5-0274 (010)

© CANON INC. 2006

PRINTED IN JAPAN OR KOREA