Canon

LASER SHOT

Laser Beam Printer

LASER SHOT LBP5000

User's Guide

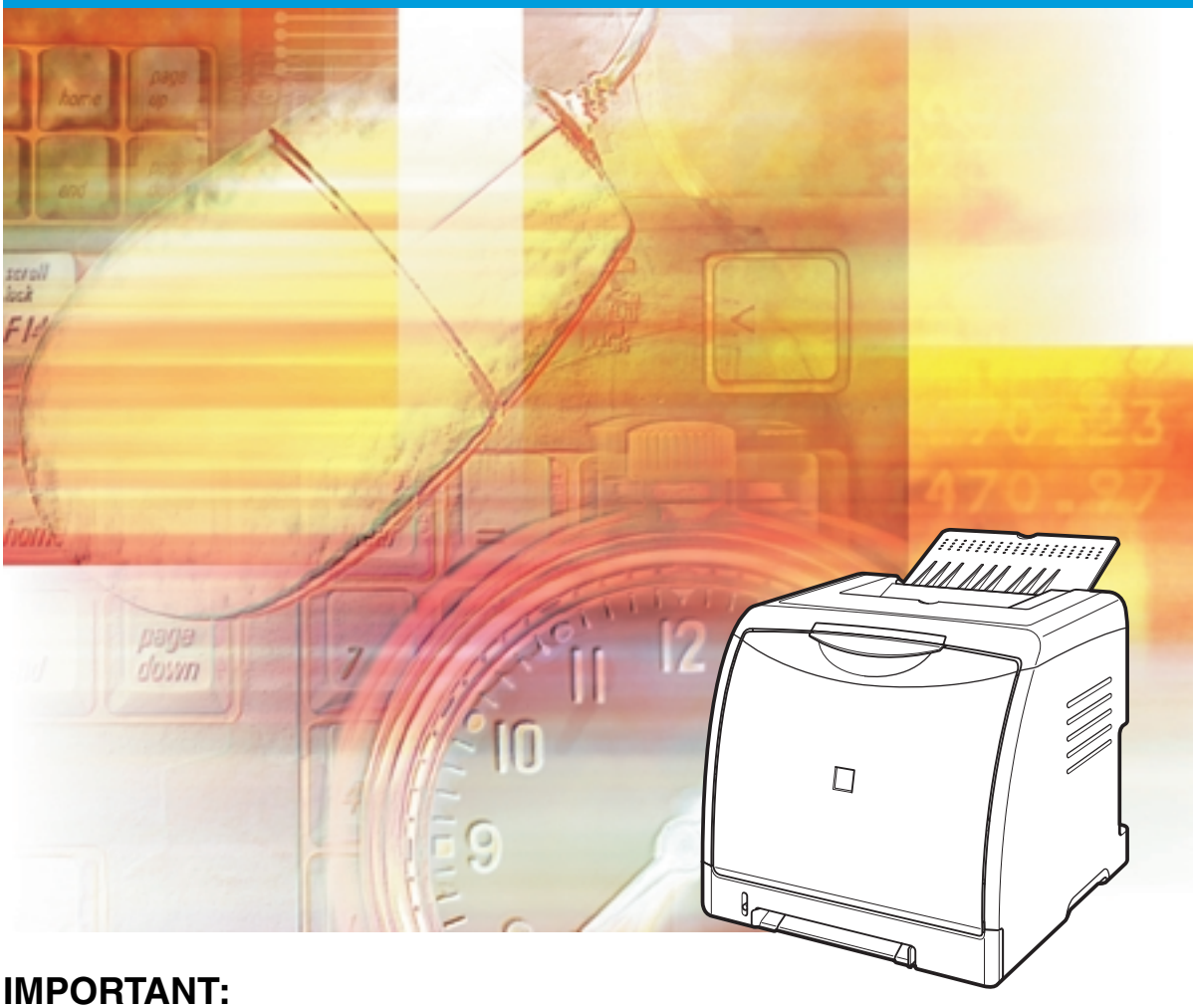

IMPORTANT:

Read this manual carefully before using your printer.
Save this manual for future reference.

ENG

LBP5000
Laser Printer
User's Guide

Manuals for the Printer

The manuals for this printer are arranged as follows. Please refer to them for detailed information.

Guides with this symbol are PDF manuals included on the accompanying CD-ROM.

- **Installation**
- **Connecting to a Computer**
- **Printing Methods**

Getting Started Guide CD-ROM

- **Basic Operations**
- **Troubleshooting**

User's Guide (This Manual) CD-ROM

- **Setting Up the Network Environment for Printing**
- **Managing the Printer in the Network Environment**

Only when the optional network board is installed

Network Guide CD-ROM

- **Operating/Setting the Printer from the Web Browser**

Only when the optional network board is installed

Remote UI Guide CD-ROM

To view the manual in PDF format, Adobe Reader/Adobe Acrobat Reader is required. If Adobe Reader/Adobe Acrobat Reader is not installed on your system, please download it from the Adobe Systems Incorporated website.

How This Manual Is Organized

Chapter 1 Before You Start

Chapter 2 Loading and Outputting Paper

Chapter 3 Setting Up the Printing Environment

Chapter 4 Printing a Document

Chapter 5 Routine Maintenance

Chapter 6 Optional Accessories

Chapter 7 Troubleshooting

Chapter 8 Appendix

Considerable effort has been made to ensure that this manual is free of inaccuracies and omissions. However, as we are constantly improving our products, if you need an exact specification, please contact Canon.

Contents

Preface . . . . . **viii**
How To Use This Manual . . . . . **viii**
Symbols Used in This Manual viii
Buttons Used in This Manual viii
Displays Used in This Manual ix
Illustrations Used in This Manual ix
Abbreviations Used in This Manual x
Legal Notices . . . . . **xi**
FCC (Federal Communications Commission) xi
EMC Directive (220 - 240 V model) xii
Laser Safety (110 - 127/220 - 240 V models). xii
International Energy Star-Program xiii
WEEE Directive xiii
Trademarks. xiv
Copyright xiv
Disclaimers. xiv
Legal Limitations on the Usage of Your Product and the Use of Images xv
Important Safety Instructions . . . . . **xvi**
Installation xvi
Power Supply xviii
Handling xix
Maintenance and Inspections xx
Consumables xxi

Chapter 1 Before You Start

Features and Benefits **1-2**
Parts and Their Functions **1-4**
Printer Unit 1-4
Front View 1-4
Rear View 1-5
Inner View 1-6
Indicators 1-6
Connecting the Power Cord **1-8**
Connecting the Power Cord 1-8
Turning the Printer ON/OFF **1-10**
Turning the Printer ON 1-10
Turning the Printer OFF 1-11
Power Saving (Sleep Mode) 1-12

Connecting to a Computer 1-14
Using a USB Cable 1-14
Using a LAN Cable 1-16

Chapter 2 Loading and Outputting Paper

Paper Requirements 2-2
Usable Paper 2-2
Paper Size 2-2
Paper Type 2-3
Abbreviations of Paper Sizes 2-5
Printable Area 2-6
Unusable Paper 2-7
Storing Paper 2-8
Storing Printouts 2-8
Paper Source 2-9
Paper Source Type 2-9
Paper Capacity of Paper Source 2-10
Selecting a Paper Source 2-10
Precautions for Handling the Manual Feed Slot or Paper Cassette 2-12
Output Tray 2-13
Output Tray 2-13
Paper Capacity of the Output Tray 2-13
Loading Plain Paper, Heavy Paper, Transparencies, or Labels in the Paper Source 2-14
Loading Paper in the Paper Cassette 2-14
Loading Paper in the Manual Feed Slot 2-23
Loading Index Card Size Media in the Paper Source 2-26
Loading Index Card Size Media in the Paper Cassette 2-26
Loading Index Card Size Media in the Manual Feed Slot 2-34
Loading Envelopes in the Paper Source 2-37
Loading Envelopes in the Paper Cassette 2-37
Loading an Envelope in the Manual Feed Slot 2-44
Loading Custom Size Paper (Non-Standard Paper) in the Paper Source . . 2-47
Loading Custom Size Paper in the Paper Cassette 2-47
Loading Custom Size Paper in the Manual Feed Slot 2-54
Registering a Custom Paper Size (Non-Standard Paper) 2-56
Setting Up the Printer Driver and Printing 2-59

Chapter 3 Setting Up the Printing Environment

Introduction 3-2
After Installing the Printer 3-2
Tasks to Perform Each Time You Print 3-2
System Requirements 3-2

Installing the CAPT Software 3-4
Installing from CD-ROM Setup 3-5
Installing with Plug and Play 3-13
For Windows 98/Me 3-13
For Windows 2000 3-22
For Windows XP/Server 2003 3-27
Installing from [Add Printer Wizard] 3-32
For Windows 98/Me 3-32
For Windows 2000 3-36
For Windows XP/Server 2003 3-42
After Completing Installation 3-49
Checking the Operations by Configuration Page Print 3-51
Printing from a Network Computer by Sharing the Printer on a Network 3-54
Print Server Settings 3-55
Installation on Clients 3-62
Installing from CD-ROM Setup 3-63
Installing from [Add Printer Wizard] 3-70
Installing from [Windows Explorer] 3-74
Uninstalling the CAPT Software 3-75

Chapter 4 Printing a Document

Setting Printer Information Before Printing 4-3
Printing from an Application 4-5
Specifying the Printing Preferences 4-9
For Windows 98/Me 4-9
Displaying the [Document Properties] Dialog Box from an Application 4-9
Displaying the [Printer Properties] Dialog Box from the [Printers] Folder . . 4-11
For Windows 2000/XP/Server 2003 4-12
Displaying the [Document Properties] Dialog Box from an Application . . . 4-12
Displaying the [Document Properties] Dialog Box from the [Printers and Faxes] Folder or the [Printers] Folder 4-14
Displaying the [Printer Properties] Dialog Box from the [Printers and Faxes] Folder or the [Printers] Folder 4-15
Deleting/Pausing/Resuming a Print Job 4-17
Using the Various Printing Functions 4-19
Utilizing a Variety of Options for Printing 4-19
Various Pages in the Printer Driver 4-25
[Page Setup] Sheet 4-27
[Finishing] Sheet 4-32
[Paper Source] Sheet 4-36
[Quality] Sheet 4-37
[Configuration]/[Device Settings] Sheet 4-43
[Profile] Sheet (Windows 2000/XP/Server 2003 only) 4-44
Preview 4-46

Printing Multiple Pages on One Sheet 4-47
Scaling Print Output 4-49
Scaling a Document Automatically 4-49
Scaling a Document Manually 4-50
Poster Printing 4-51
Watermark Printing 4-52
Watermark Printing 4-52
Editing Watermarks 4-53
Printing Borders and Printing Date 4-54
Printing with a Gutter 4-56
Specifying the Paper Output Method 4-57
Printing with Upper Left of Sheet as Starting Point 4-58
Printing with the Data 180 Degrees Rotated 4-59
Smoothing Out Rough-Textured Images 4-61
Printing with Toner Density Adjusted 4-62
Color Settings 4-64
Specifying the Brightness and Contrast 4-66
Printing a Color Sample (Windows 2000/XP/Server 2003 only) 4-68
Specifying "Profiles" 4-69
Adding a "Profile" 4-70
Editing/Deleting a Profile 4-72
Editing Jobs with PageComposer 4-73
How to Use Online Help 4-76
Displaying Online Help on the Options Displayed on the Screen 4-76
Displaying Online Help on the Operation Procedures 4-77
Retrieving the Option about Which You Want to Know
with Keywords and Displaying its Online Help 4-79
Manuals 4-82
Installing the Manuals 4-82
Uninstalling the Manuals 4-84
Printer Status Window 4-85
Functions on the Printer Status Window 4-86
Displaying the Printer Status Window 4-88
[Preferences] Menu 4-90
[Consumables/Counters] Menu 4-91
[Utility] Menu 4-91
[Device Settings] Menu 4-92
[Refresh] 4-93
[Resolve Error] 4-93
Displaying Printer Status When Using a Print Server 4-93

Chapter 5 Routine Maintenance

Replacing Toner Cartridges 5-2
When a Message Appears 5-2
Replacing Toner Cartridges 5-4

Precautions for Handling Toner Cartridges 5-14
Storing Toner Cartridges 5-16
Calibrating the Printer 5-17
Performing Calibration Manually 5-17
Performing Calibration Automatically at the Designated Time 5-18
Automatically Performing Calibration Periodically 5-20
Cleaning the Fixing Roller. 5-22
Cleaning the Outside of the Printer 5-24
Moving the Printer 5-27
Handling the Printer. 5-35

Chapter 6 Optional Accessories

Optional Accessories 6-2
Paper Feeder 6-2
Network Board 6-3
Paper Feeder 6-4
Installation Space. 6-5
Removing the Packing Materials 6-6
Moving the Printer 6-10
Installing the Paper Feeder 6-14
Removing the Paper Feeder 6-18
Network Board 6-20
Parts and Their Functions 6-21
Installing the Network Board 6-22
Setting the Network Board 6-26
Problems on Installing the Network Board 6-29
Resetting the Network Board 6-31
Removing the Network Board 6-33

Chapter 7 Troubleshooting

Troubleshooting Map. 7-2
Alarm Indicator. 7-3
Paper Jams. 7-4
Procedure for Clearing Paper Jams 7-7
Service Call Display. 7-14
Print Quality Problems 7-17
Paper Problems 7-26
When Nothing is Printed 7-28
Installation Problems. 7-29
When Uninstallation Fails. 7-30
Uninstalling the USB Class Driver 7-32
Problems on Local Installation 7-35
Installation Problems When the Printer is Shared on a Network 7-36

Problems on Installing the Network Board 7-37
Miscellaneous Problems. 7-39
Confirming the Printer Features 7-41

Chapter 8 Appendix

Specifications 8-2
Hardware Specifications 8-2
Software Specifications 8-4
Dimensions of Each Part 8-5
About Color Printing 8-7
The Three Primary Colors of Light and Color 8-7
Method for Expressing Color 8-8
About Color Printing. 8-9
Achieving More Beautiful Color Printing 8-10
NetSpot Device Installer 8-12
Print Monitor Installer 8-13
NetSpot Console 8-14
Windows Firewall. 8-15
Configuring Windows Firewall to Unblock Communication with the Client Computers 8-16
Configuring Windows Firewall to Block Communication with the Client Computers 8-17
Configuring Windows Firewall to Unblock Communication with the Print Server 8-19
Index 8-20
Location of the Serial Number 8-25

Preface

Thank you for purchasing the Canon LASER SHOT LBP5000.
Please read this manual thoroughly before operating the printer in order to familiarize yourself with its capabilities, and to make the most of its many functions.
After reading this manual, store it in a safe place for future reference.

How To Use This Manual

Symbols Used in This Manual

The following symbols are used in this manual to explain procedures, restrictions, handling precautions, and instructions that should be observed for safety.

WARNING	Indicates a warning concerning operations that may lead to death or injury to persons if not performed correctly. In order to use the printer safely, always pay attention to these warnings.
CAUTION	Indicates a caution concerning operations that may lead to injury to persons, or damage to property if not performed correctly. In order to use the printer safely, always pay attention to these cautions.
IMPORTANT	Indicates operational requirements and restrictions. Be sure to read these items carefully in order to operate the printer correctly, and to avoid damage to the printer.
NOTE	Indicates a clarification of an operation, or contains additional explanations for a procedure. Reading these notes is highly recommended.

Buttons Used in This Manual

The following button names are a few examples of how buttons to be pressed are expressed in this manual:

- Buttons on Computer Operation Screen: [Button Name]

  Example: [OK]
  [Details]

Displays Used in This Manual

Displays used in this manual may differ from those on your computer depending on the system environment.

The buttons which you should press are marked with a ⬭ as shown below.

When multiple buttons can be pressed on the screen shot of computer operation screen, all buttons are marked. Select the button which suits your needs.

7 **Click [Next].**

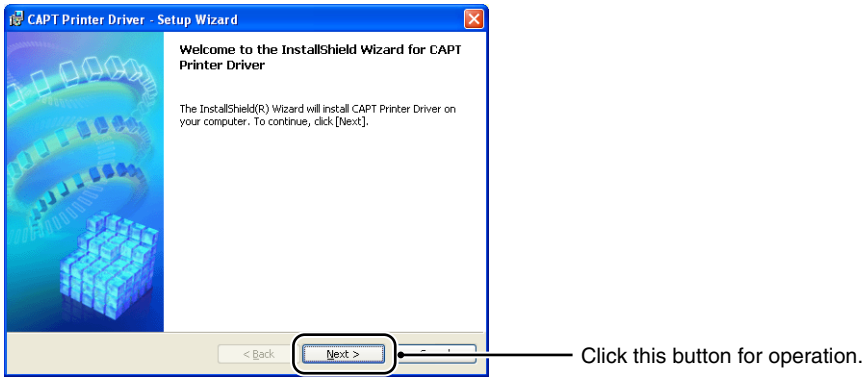

Illustrations Used in This Manual

Although the indicator names are not indicated in the illustrations of the control panel used in this manual, the names are indicated above the respective icons depending on the country or region.

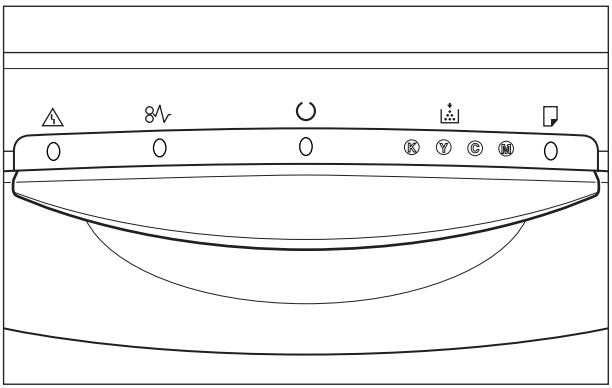

Abbreviations Used in This Manual

In this manual, product names and model names are abbreviated as follows:

Microsoft® Windows®95 operating system:	Windows 95
Microsoft®Windows®98 operating system:	Windows 98
Microsoft®Windows®Millennium Edition operating system:	Windows Me
Microsoft®Windows®2000 operating system:	Windows 2000
Microsoft® Windows® XP operating system:	Windows XP
Microsoft®Windows Server™ 2003 operating system:	Windows Server 2003
Microsoft®Windows®operating system:	Windows
LASER SHOT LBP5000:	LBP5000

Legal Notices

FCC (Federal Communications Commission)

Laser Beam Printer, Model L11111A

■ 110 -127 V model

This device complies with part 15 of the FCC Rules. Operation is subject to the following two conditions: (1) This device may not cause harmful interference, and (2) this device must accept any interference received, including interference that may cause undesired operation.
This equipment has been tested and found to comply with the limits for a class B digital device, pursuant to Part 15 of the FCC rules. These limits are designed to provide reasonable protection against harmful interference in a residential installation. This equipment generates, uses and can radiate radio frequency energy and if not installed and used in accordance with the instructions, may cause harmful interference to radio communications. However, there is no guarantee that interference will not occur in a particular installation.

If this equipment does cause harmful interference to radio or television reception, which can be determined by turning the equipment off and on, the user is encouraged to try to correct the interference by one or more of the following measures:

- Reorient or relocate the receiving antenna.
- Increase the separation between the equipment and receiver.
- Connect the equipment into an outlet on a circuit different from that to which the receiver is connected.
- Consult the dealer or an experienced radio/TV technician for help.

Use of shielded cable is required to comply with class B limits in Subpart B of Part 15 of FCC Rules.

Do not make any changes or modifications to the equipment unless otherwise specified in the manual. If such changes or modifications should be made, you could be required to stop operation of the equipment.

Canon U.S.A. Inc.
One Canon Plaza, Lake Success, NY 11042, U.S.A.
Tel No. (516) 328-5600

EMC Directive (220 - 240 V model)

"This equipment has been tested in a typical system to comply with the technical requirements of EMC Directive."

- Use of shielded cable is necessary to comply with the technical requirements of EMC Directive.

The product is in conformity with the EMC directive at nominal mains input 230 V, 50 Hz although the rated input of the product is 220 - 240 V, 50/60 Hz.

C-tick marking ✔ on the rating label means that we declare the product is in conformity with the relevant requirements at nominal mains input 230 V, 50 Hz although the rated input of the product is 220 - 240 V, 50/60 Hz.

Laser Safety (110 - 127/220 - 240 V models)

Laser radiation could be hazardous to the human body. For this reason, laser radiation emitted inside this printer is hermetically sealed within the protective housing and external cover. No radiation can leak from the printer in the normal operation of the product by the user.

This printer is classified as a Class 1 laser product under IEC60825-1:1993, EN60825-1:1994, and as for the U.S.A., it is classified as Class 1 under the Code of Federal Regulations, 1040.10 of Title 21.

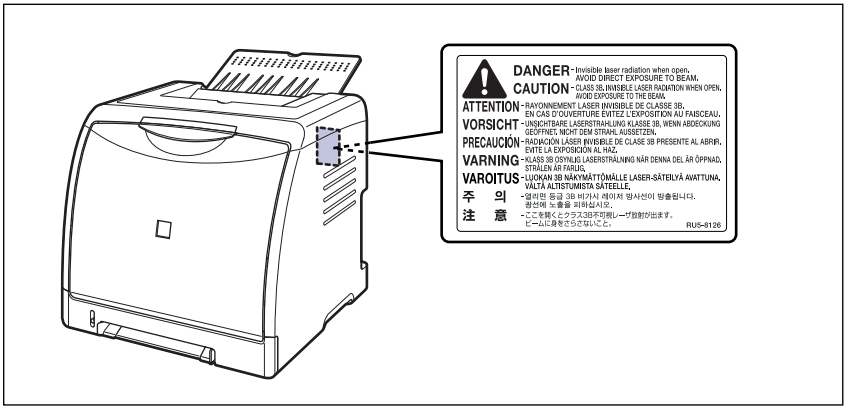

This printer has been classified under IEC60825-1:1993, EN60825-1:1994 and conforms to the following classes:

CLASS 1 LASER PRODUCT
LASER KLASSE 1
APPAREIL A RAYONNEMENT LASER DE CLASSE 1
APPARECCHIO LASER DI CLASSE 1
PRODUCTO LASER DE CLASE 1
APARELHO A LASER DE CLASSE 1
(220 - 240 V model only)

CAUTION

Performance of procedures other than those specified in this manual may result in hazardous radiation exposure.

International Energy Star-Program

As an ENERGY STAR Partner, Canon Inc. has determined that this product meets the ENERGY STAR Program for energy efficiency.

The International ENERGY STAR Office Equipment Program is an international program that promotes energy saving through the use of computers and other office equipment.

The program backs the development and dissemination of products with functions that effectively reduce energy consumption. It is an open system in which business proprietors can participate voluntarily.

The targeted products are office equipment, such as computers, displays, printers, facsimiles, and copiers. The standards and logos are uniform among participating nations.

WEEE Directive

This symbol on the rating label (attached to the back of the printer) indicates separate collection for electrical and electronic equipment required under the WEEE Directive (Directive 2002/96/EC) and is effective only within the European Union.

Trademarks

Canon, the Canon Logo, LASER SHOT, LBP, NetSpot, and PageComposer are trademarks of Canon Inc.

Adobe, Adobe Acrobat, and Adobe Reader are trademarks of Adobe Systems Incorporated.

Apple and TrueType are trademarks of Apple Computer, Inc.

IBM is a trademark of International Business Machines Corporation.

Microsoft and Windows are registered trademarks of Microsoft Corporation in the United States and other countries.

Windows Server is a trademark of Microsoft Corporation.

Ethernet is a trademark of Xerox Corporation.

Other product and company names herein may be the trademarks of their respective owners.

Copyright

Copyright 2005 by Canon Inc. All rights reserved.

No part of this publication may be reproduced or transmitted in any form or by any means, electronic or mechanical, including photocopying and recording, or by any information storage or retrieval system without the prior written permission of Canon Inc.

Disclaimers

The information in this manual is subject to change without notice.

CANON INC. MAKES NO WARRANTY OF ANY KIND WITH REGARD TO THIS MATERIAL, EITHER EXPRESS OR IMPLIED, EXCEPT AS PROVIDED HEREIN, INCLUDING WITHOUT LIMITATION, THEREOF, WARRANTIES AS TO MARKETABILITY, MERCHANTABILITY, FITNESS FOR A PARTICULAR PURPOSE OF USE OR AGAINST INFRINGEMENT OF ANY PATENT. CANON INC. SHALL NOT BE LIABLE FOR ANY DIRECT, INCIDENTAL, OR CONSEQUENTIAL DAMAGES OF ANY NATURE, OR LOSSES OR EXPENSES RESULTING FROM THE USE OF THIS MATERIAL.

Legal Limitations on the Usage of Your Product and the Use of Images

Using your product to scan, print or otherwise reproduce certain documents, and the use of such images as scanned, printed or otherwise reproduced by your product, may be prohibited by law and may result in criminal and/or civil liability. A non-exhaustive list of these documents is set forth below. This list is intended to be a guide only. If you are uncertain about the legality of using your product to scan, print or otherwise reproduce any particular document, and/or of the use of the images scanned, printed or otherwise reproduced, you should consult in advance with your legal advisor for guidance.

- Paper Money
- Money Orders
- Certificates of Deposit
- Postage Stamps (canceled or uncanceled)
- Identifying Badges or Insignias
- Selective Service or Draft Papers
- Checks or Drafts Issued by Governmental Agencies
- Motor Vehicle Licenses and Certificates of Title
- Travelers Checks
- Food Stamps
- Passports
- Immigration Papers
- Internal Revenue Stamps (canceled or uncanceled)
- Bonds or Other Certificates of Indebtedness
- Stock Certificates
- Copyrighted Works/Works of Art without Permission of Copyright Owner

Important Safety Instructions

Please read these "Important Safety Instructions" thoroughly before operating the printer. As these instructions are intended to prevent injury to the user or other persons or destruction of property, always pay attention to these instructions. Also, since it may result in unexpected accidents or injuries, do not perform any operation unless otherwise specified in the manual. Improper operation or use of this machine could result in personal injury and/or damage requiring extensive repair that may not be covered under your Limited Warranty.

Installation

WARNING

- **Do not install the printer near alcohol, paint thinner, or other flammable substances. If flammable substances come into contact with electrical parts inside the printer, it may result in a fire or electrical shock.**
- **Do not place the following items on the printer. If these items come into contact with a high-voltage area inside the printer, it may result in a fire or electrical shock.**
  If these items are dropped or slipped inside the printer, immediately turn OFF the power switch ① and disconnect the USB cable if it is connected ②. Then, unplug the power plug from the AC power outlet ③ and contact your local authorized Canon dealer.
  - Necklaces and other metal objects

- Cups, vases, flowerpots, and other containers filled with water or liquids

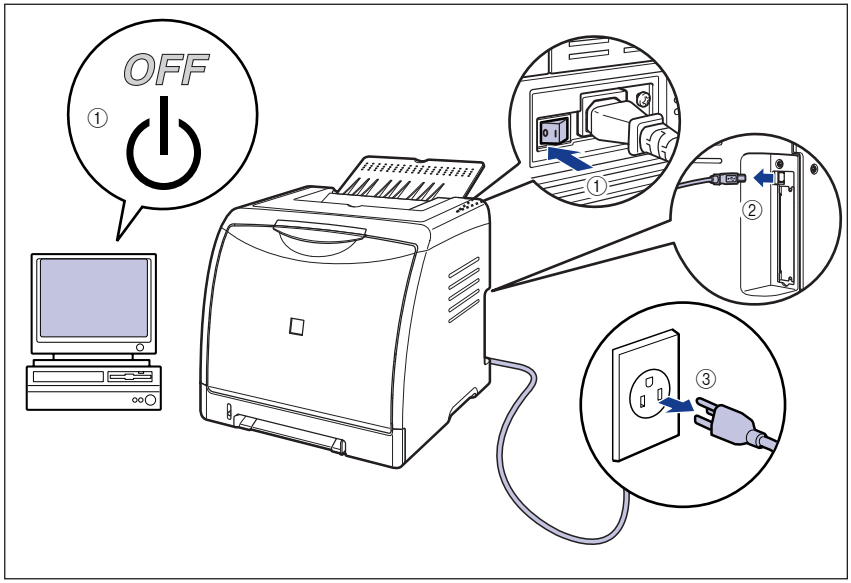

CAUTION

- Do not install the printer in unstable locations, such as unsteady platforms or inclined floors, or in locations subject to excessive vibrations, as this may cause the printer to fall or tip over, resulting in personal injury.
- Never block the ventilation slots on the printer. The ventilation slots are provided for proper ventilation of working parts inside the printer. Never place the printer on a soft surface, such as a sofa or rug. Blocking the ventilation slots can cause the printer to overheat, resulting in a fire.
- Do not install the printer in the following locations, as this may result in a fire or electrical shock:
  - A damp or dusty location
  - A location exposed to smoke and steam such as cookeries and humidifiers
  - A location exposed to rain or snow
  - A location near water faucets or water
  - A location exposed to direct sunlight
  - A location subject to high temperatures
  - A location near open flames
- When installing the printer, gently lower the printer onto the floor or other machine to avoid catching your hands, as this may result in personal injury.
- When connecting the interface cable, connect it properly following the instructions in this manual. If not connected properly, this may result in malfunction or electrical shock.
- When moving the printer, follow the instructions in this manual to hold it correctly. Failure to do so may cause you to drop the printer, resulting in personal injury. (See "Moving the Printer," on p. 5-27)

Power Supply

WARNING

- Do not damage or modify the power cord. Also, do not place heavy objects on the power cord, or pull on or excessively bend it, as this could cause electrical damage and result in a fire or electrical shock.
- Keep the power cord away from a heat source; failure to do this may cause the power cord coating to melt, resulting in a fire or electrical shock.
- Do not plug or unplug the power plug with wet hands, as this may result in electrical shock.
- Do not plug the power cord to a multiplug power strip, as this may cause a fire or electrical shock.
- Do not bundle up or tie the power cord in a knot, as this may result in a fire or electrical shock.
- Insert the power plug completely into the AC power outlet, as failure to do so may result in a fire or electrical shock.
- Do not use power cords other than the power cord provided, as this may result in a fire or electrical shock.
- As a general rule, do not use extension cords or plug extension cords to a multiple power strip. If extension cords must be used or plugged to a multiple power strip, however, use them observing the following points on user's own authority. If you use extension cords improperly, this may result in a fire or electrical shock.
  - Do not connect one extension cord to another.
  - Make sure that the voltage of the power plug is the one indicated in the rating label (attached on the back of the printer) when you use the printer.
  - Use an extension cord that allows the current value greater than the necessary one indicated in the rating label (attached on the back of the printer).
  - When you use an extension cord, untie the cord binding, and insert the power plug completely into the extension cord outlet to ensure a firm connection between the power cord and the extension cord.
  - Periodically check that the extension cord is not overheated.

CAUTION

- Do not use power supplies with voltages other than those specified herein, as this may result in a fire or electrical shock.
- Always grasp the plug when unplugging the power cord. Pulling on the power cord may expose or snap the core wire, or otherwise damage the power cord. If the power cord is damaged, this could cause current to leak, resulting in a fire or electrical shock.
- Leave sufficient space around the power plug so that it can be unplugged easily. If objects are placed around the power plug, you will be unable to unplug it in an emergency.

Handling

WARNING

- Do not attempt to disassemble or modify the printer. There are high-temperature and high-voltage components inside the printer which may result in a fire or electrical shock.
- Electrical equipment can be hazardous if not used properly. To avoid injury, do not allow children access to the interior of any electrical product and do not let them touch any electrical contacts or gears that are exposed.
- If the printer makes strange noises, or emits smoke, heat or unusual smells, immediately turn OFF the power switch, and disconnect the USB cable if it is connected. Then, unplug the power plug from the AC power outlet and contact your local authorized Canon dealer. Otherwise, this may result in a fire or electrical shock.
- Do not use highly flammable sprays near the printer. If gas from these sprays comes into contact with the electrical components inside the printer, it may result in a fire or electrical shock.
- Always turn OFF the power switch, and disconnect the interface cables when moving the printer. Otherwise, the power cord or interface cables may be damaged, resulting in a fire or electrical shock.
- Do not drop paper clips, staples, or other metal objects inside the printer. Also, do not spill water, liquids, or flammable substances (alcohol, benzene, paint thinner, etc.) inside the printer. If these items come into contact with a high-voltage area inside the printer, it may result in a fire or electrical shock. If these items are dropped or slipped inside the printer, immediately turn OFF the power switch and disconnect the USB cable if it is connected. Then, unplug the power plug from the AC power outlet and contact your local authorized Canon dealer.
- When plugging or unplugging the USB cable when the power plug is plugged in an AC power outlet, do not touch the metal part of the connector, as this may result in electrical shock.

CAUTION

- Do not place heavy objects on the printer, as they may tip over or fall resulting in personal injury.
- Be careful when handling the expansion board. Touching the edges or a sharp portion of the expansion board may result in personal injury.
- Turn OFF the power switch for safety when the printer will not be used for a long period of time such as overnight. Also, turn OFF the power switch on the right of the printer and unplug the power plug for safety when the printer will not be used for an extended period of time such as during consecutive holidays.
- The laser beam can be harmful to human bodies. Since radiation emitted inside the printer is completely confined within protective housings and external covers, the laser beam cannot escape from the printer during any phase of user operation. Read the following remarks and instructions for safety.

  - Never open covers other than those instructed in this manual.

- Do not remove the caution label attached to the cover of the laser scanner unit.

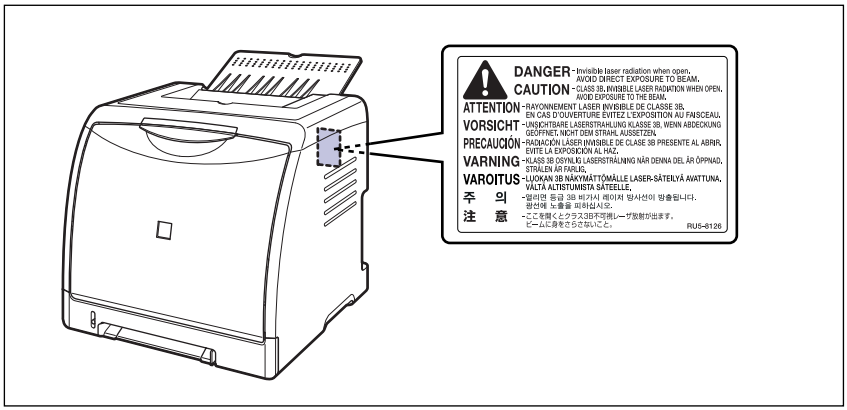

- If the laser beam escapes from the printer, exposure may cause serious damage to your eyes.

Maintenance and Inspections

WARNING

- When cleaning the printer, turn OFF the main power switch, remove the USB cable, and then unplug the power plug. Failure to observe these steps may result in a fire or electrical shock.
- Unplug the power plug from the AC power outlet regularly, and clean the area around the base of the power plug's metal pins and the AC power outlet with a dry cloth to ensure that all dust and grime is removed. If the power plug is plugged for a long period of time in a damp, dusty, or smoky location, dust can build up around the power plug and become damp. This may cause a short circuit and result in a fire.
- Clean the printer using a slightly dampened cloth with water or a mild detergent diluted with water. Do not use alcohol, benzene, paint thinner, or other flammable substances. If flammable substances come into contact with electrical parts inside the printer, it may result in a fire or electrical shock.
- There are some areas inside the printer which are subject to high-voltages. When removing jammed paper or when inspecting the inside of the printer, do not allow necklaces, bracelets, or other metal objects to touch the inside of the printer, as this may result in burns or electrical shock.
- Do not throw a used toner cartridge into open flames, as this may cause the toner remaining inside the cartridge to ignite, resulting in burns or a fire.

CAUTION

- Never attempt to service this printer yourself, except as explained in this manual. There are no user serviceable parts inside the printer. Adjust only those controls that are covered in the operating instructions. Improper adjustment could result in personal injury and/or damage requiring extensive repair that may not be covered under your Limited Warranty.

- **The fixing unit and its surroundings inside the printer become hot during use. When removing jammed paper or when inspecting the inside of the printer, do not touch the fixing unit and its surroundings, as doing so may result in burns or electrical shock.**

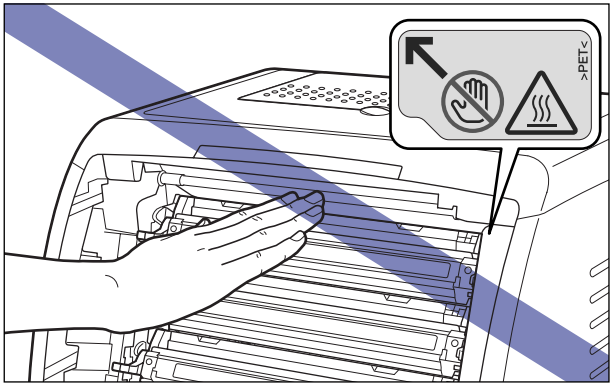

- **When removing jammed paper or replacing a toner cartridge, take care not to allow the toner to come into contact with your hands or clothing, as this will dirty your hands or clothing. If they become dirty, wash them immediately with cold water. Washing with warm water will set the toner and make it impossible to remove the toner stains.**
- **When removing paper jammed inside the printer, remove the jammed paper gently to prevent the toner on the paper from scattering and getting into your eyes or mouth. If the toner gets into your eyes or mouth, wash them immediately with cold water and immediately consult a physician.**
- **When loading paper or removing jammed paper, take care not to cut your hands with the edges of the paper.**
- **When removing a used toner cartridge from the toner cartridge slot, remove the cartridge carefully to prevent the toner from scattering and getting into your eyes or mouth. If the toner enters your eyes or mouth, wash them immediately with cold water and immediately consult a physician.**

Consumables

WARNING

- **Do not throw a used toner cartridge into open flames, as this may cause toner remaining inside the cartridge to ignite and result in burns or a fire.**
- **Do not store a toner cartridge or copy paper in places exposed to open flames, as this may cause the toner or paper to ignite and result in burns or a fire.**

CAUTION

Keep toner cartridges and other consumables out of the reach of small children. If these items are ingested, consult a physician immediately.

Before You Start

1

CHAPTER

This chapter describes the major features and basic functions of this printer.

Features and Benefits 1-2

Parts and Their Functions 1-4

Printer Unit 1-4

Indicators 1-6

Connecting the Power Cord 1-8

Connecting the Power Cord 1-8

Turning the Printer ON/OFF 1-10

Turning the Printer ON 1-10

Turning the Printer OFF 1-11

Power Saving (Sleep Mode) 1-12

Connecting to a Computer 1-14

Using a USB Cable 1-14

Using a LAN Cable 1-16

Features and Benefits

This section describes the major features.

■ High Definition Full Color Printing

This printer is fitted with a 600 dpi full color laser printer engine. Through additional gradation control, this delivers 9600 dpi equivalent x 600 dpi high quality printing. Furthermore, calibration processing provides consistently stable images.

■ High Performance Printing System "CAPT"

LBP5000 is equipped with the latest high performance printing system, "CAPT" (Canon Advanced Printing Technology), that is compatible with Windows operating systems. As this system allows data to be batch processed by a computer instead of a printer, it enables high-speed printing, making full use of the features of the computer. Also, a large amount of data can be processed without expanding the printer memory.

■ Compact Design

Although LBP5000 is a color printer, it is compact enough to fit on a desktop.

■ USB 2.0 Hi-Speed Installed as Standard

LBP5000 achieves high-speed transmission by supporting Hi-Speed I/F USB 2.0 that offers up to 480 Mbps transmission speeds.

■ Easy Maintenance

The toner cartridges (Canon Genuine Cartridges) of four colors (Cyan, Magenta, Yellow, and Black) in which toner and drum are integrated relieve you from toner replenishment and drum replacement that tend to stain your hands, achieving easy routine maintainance that only requires replacement of these toner cartridges. Furthermore, because the cover is located on the front, you can easily replace the toner cartridges and remove paper jammed paper inside the printer. This feature is achieved by centralizing all the operations (feeding paper, development, and transferring and fixing toner) at the front of the printer and simplifying the paper transport path.

■ Low Power Consumption and Quick Startup

By adopting "On-demand Fixing System", LBP5000 achieves low power consumption and quick startup. This Canon's original technology enables instantaneous heating of the fusing heater only before printing, saving warm-up time. So, LBP5000 is always in standby status and ready to print. Also, thanks to its power-saving design, the fixing unit's power consumption is very low when idle.

■ Supporting Various Types of Media

Supports various types of media including plain paper, heavy paper, envelopes (Envelope DL, Envelope COM10, Envelope C5, Envelope Monarch, and Envelope B5), Index Card size media, labels, and transparencies (black and white printing only). Although LBP5000 is designed for printing media of A4 size or smaller, you can print A3 and B4 size data on A4 size paper by using the function to reduce the standard paper sizes.

You can also print irregular, custom size paper.

■ Network-capable Printer

LBP5000 can be used as an Ethernet network printer by installing the optional network board. The network board enables the operation of the printer using a built-in web browser "Remote UI" allowing you to specify settings and manage the printer from a computer on the network.

NOTE

For details on the operating systems that support the optional network board and procedure for setting the board, see "Network Guide".

■ User-Friendly Color Control

The user interface with thumbnails delivers intuitive and easy to use color tone adjustment.

Parts and Their Functions

This printer consists of components that perform various functions. This section describes the name and function of each part in order for you to use this printer properly to make full use of its functions.

Printer Unit

The following are the parts and functions of the printer unit.

CAUTION

Never block the ventilation slots (including the air intake slot and exhaust slot) on the printer. If any ventilation slot is blocked, the temperature inside the printer may rise, resulting in a fire.

Front View

The following are the parts on the front side of the printer and their functions.

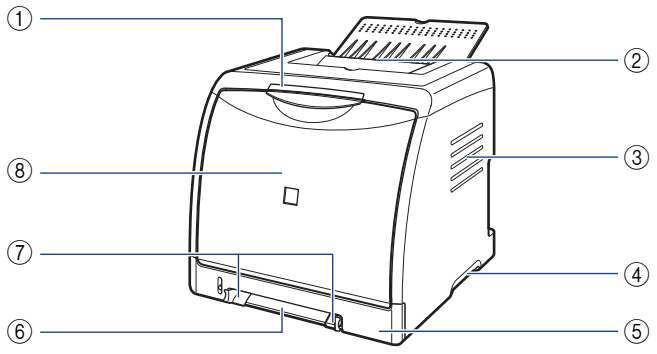

① Indicators

Show the status of the printer. (See p. 1-6)

② Output Tray

Outputs paper with the printed side facing down. (See p. 2-13)

③ Ventilation Slot (air intake slot)

Intakes air to cool the insides of the printer.

④ Lift Handles

Hold these handles when moving the printer. (See p. 5-29)

⑤ Paper Cassette

Can be loaded with up to 250 sheets of plain paper (of 64 g/m^2). (See p. 2-9)

⑥ **Manual Feed Slot**

Used when printing a sheet at a time manually. (See p. 2-9)

⑦ **Paper Guides**

Align them with the width of the paper so that the paper is fed straight.

⑧ **Front Cover**

Opened when replacing the toner cartridge or removing jammed paper. (See p. 5-5)

Rear View

The following are the parts on the rear side of the printer and their functions.

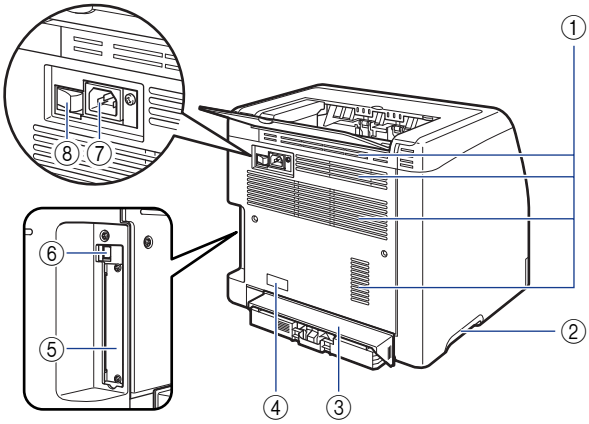

① **Ventilation Slots (exhaust slots)**

Exhaust air to cool the insides of the printer.

② **Lift Handles**

Hold these handles when moving the printer. (See p. 5-29)

③ **Cassette Protective Cover**

Prevents dirt and dust from entering the paper cassette.

④ **Rating Label**

The current value indicated in this rating label shows the average power current consumption.

⑤ **Expansion Slot**

The optional network board is installed in this slot. (See p. 6-20)

⑥ **USB Connector**

Connected to the USB cable. Connect the other end of the cable to the USB port on the computer. (See p. 1-14)

⑦ **Power Socket**

Connect the supplied power cord to this socket.

⑧ **Power Switch**

Turns the power of the printer ON/OFF. (See p. 1-10)

Inner View

The following are the parts inside the printer and their functions.

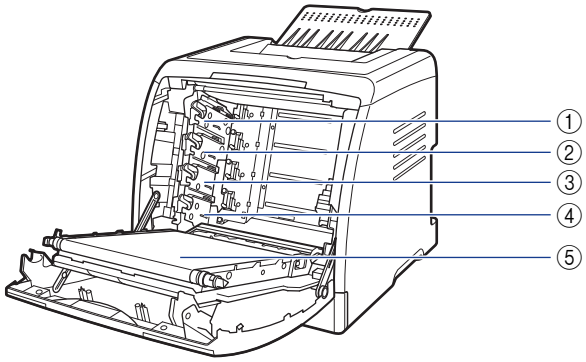

① K (Black) Toner Cartridge Slot

The K (black) toner cartridge is installed in this slot.

② Y (Yellow) Toner Cartridge Slot

The Y (yellow) toner cartridge is installed in this slot.

③ C (Cyan) Toner Cartridge Slot

The C (cyan) toner cartridge is installed in this slot.

④ M (Magenta) Toner Cartridge Slot

The M (magenta) toner cartridge is installed in this slot.

⑤ ETB (Electro static Transfer Belt) Unit

Transfers toner of four colors onto paper while transporting it.

Indicators

NOTE

You can confirm information about the printer status using the Printer Status Window from the computer you are using. For details on the Printer Status Window, see "Printer Status Window," on p. 4-85.

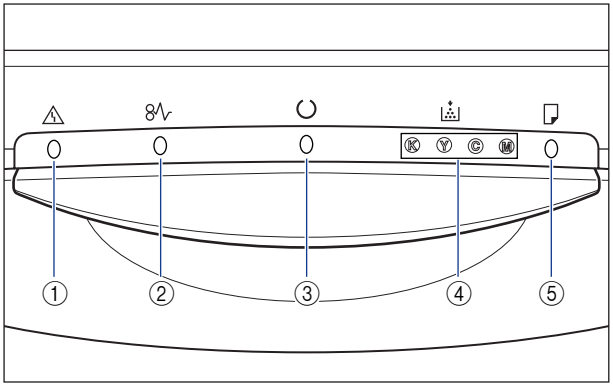

* Unlike in the above illustration, the indicator names are indicated above the respective icons depending on the country or region.

① ⚠ **Alarm Indicator (Orange)**

On: Service call is occurring.
Blinking: An error is occurring, disabling printing.

② **Paper Jam Indicator (Orange)**

Blinking: A paper jam is occurring, disabling printing.

③ ○ **Ready Indicator (Green)**

On: The printer is in the sleep mode and ready to print.
Blinking: The printer is busy performing some kind of processing or operation, such as printing, warming up, calibrating, or pausing a job.

④ **Toner Indicator (Orange)**

On: Toner cartridge replacement is required.
Blinking: Cannot print because toner cartridge replacement is required or any toner cartridge is not installed properly.
Indicator of the color that requires toner cartridge replacement comes on or blinks. "K", "Y", "C", and "M" indicate black, yellow, cyan, and magenta respectively.

⑤ **Load Paper Indicator (Orange)**

On: There is no paper in any paper source.
Blinking: No paper or paper of an inappropriate size is loaded.

Connecting the Power Cord

This section describes the procedure for connecting the power cord. When connecting the power cord, see "Important Safety Instructions," on p. xvi.

Connecting the Power Cord

IMPORTANT

- Do not plug the power plug into the auxiliary outlet on a computer.
- One AC power outlet should be used exclusively for the printer.
- Do not connect this printer to an uninterruptible power source. This may cause printer malfunction or breakdown at the occurrence of a power failure.

1 Make sure that the power switch of the printer is OFF.

The printer is OFF when "○" of the power switch is pressed.

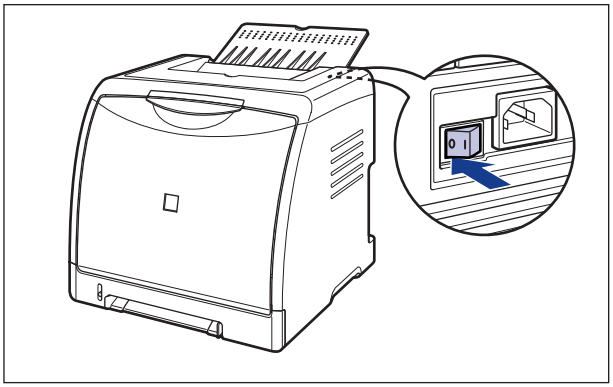

2 Plug the supplied power cord into the power socket.

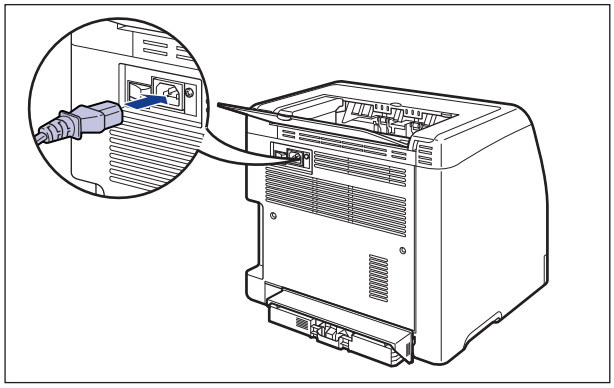

3 Plug the power plug into the AC power outlet.

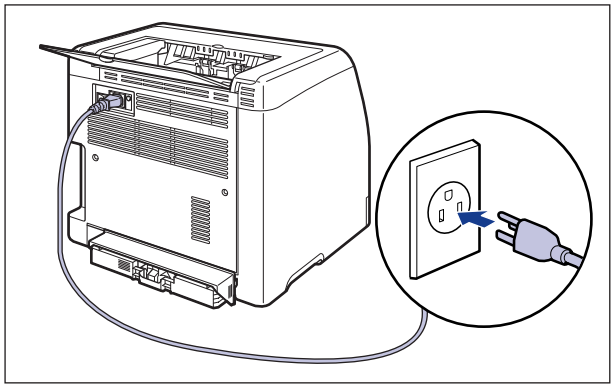

Turning the Printer ON/OFF

The power switch to turn the printer ON or OFF is located on the back of the printer. Be sure to observe the following instructions in order to prevent unexpected problems.

Turning the Printer ON

In order to use this printer, you should press "|" of the power switch to turn the printer ON. After running a self-diagnostic test on the printer unit and optional accessories, the printer will be ready to print.

IMPORTANT

- Do not turn the power ON immediately after turning it OFF. If you want to turn the printer ON again after turning it OFF, wait at least 10 seconds after turning the printer OFF before turning it ON again.
- If the printer does not operate properly, or an error message appears in the Printer Status Window, see "Troubleshooting," on p. 7-1.
- When turning the power ON, make sure that no paper is loaded in the manual feed slot. If the power is turned ON when any paper is loaded in the manual feed slot, this may result in paper jams.
- Although a sheet of blank paper is output when you turn the power ON for the first time after you install the printer, this is not an error.

1 **Press "|" of the power switch on the printer.**

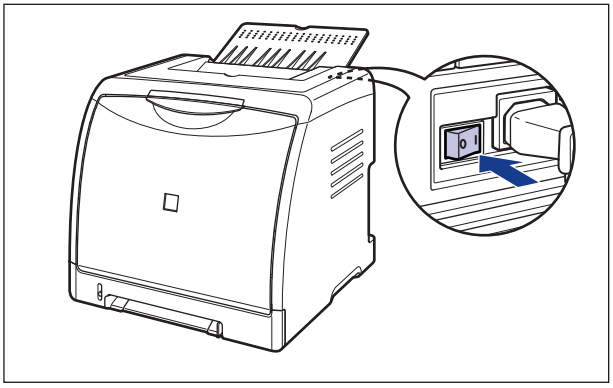

All the indicators on the printer blink, and the printer initiates a self-diagnostic test on the printer unit and optional accessories.
If no abnormality is found during the self-diagnostic test, the ○ (Ready) indicator (green) comes on after blinking, and the printer is ready to print.

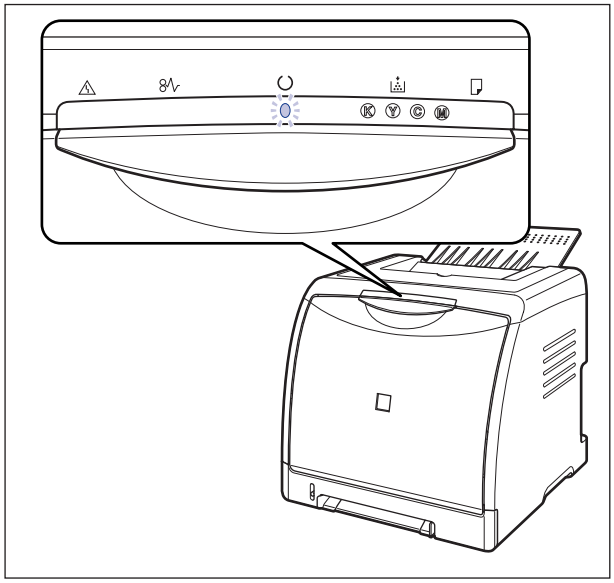

Turning the Printer OFF

Turn the printer OFF using the following procedure.

IMPORTANT

- If the printer is used on a network, make sure that it is not printing data from another computer before turning the power OFF.
- If you turn the printer OFF, all print data remaining in the printer memory will be erased. So, wait for the necessary print data to be printed before turning the power OFF.
- Do not turn the power OFF when the printer is in any of the following status:
  - While the printer is in the middle of printing
  - While the printer is running a self-diagnostic test immediately after turning the power ON

1 Press "○" of the power switch on the printer.

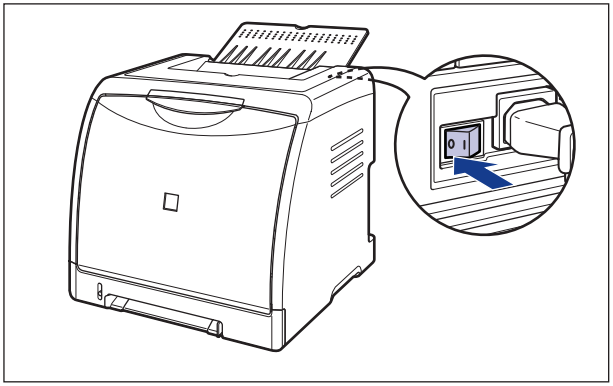

Power Saving (Sleep Mode)

You can reduce power consumption efficiently by using the sleep mode when the printer is idle or not in use. Use the sleep mode using the following procedure.

IMPORTANT

- You can select [5], [10], [15], [30], [60], [90], [120], [150], or [180] minutes for [Time to Enter Sleep Mode]. The default value is [30] minutes. You can also configure the printer not to enter the sleep mode.
- While "○" of the power switch located on the back of the printer is pressed, the power consumption is 0 W.
- The sleep mode is cleared in the following circumstances:
  - Printing is performed
  - Calibration is performed
  - Cleaning is performed
- If you use the sleep mode, the printer does not perform calibration when it is in the sleep state even if the [Auto Calibration at Regular Interval] check box in the [Calibration Settings] dialog box in the Printer Status Window is selected.
  If you do not use the sleep mode, the printer automatically performs calibration periodically by selecting the [Auto Calibration at Regular Interval] check box. If you perform calibration frequently, this may affect the life of the toner cartridges.
  For details on specifying the setting for [Auto Calibration at Regular Interval], see "Automatically Performing Calibration Periodically," on p. 5-20.

1 Display the Printer Status Window.

For details on methods for displaying the Printer Status Window, see "Displaying the Printer Status Window," on p. 4-88.

2 From the [Options] menu in the Printer Status Window, select [Device Settings] → [Sleep Settings].

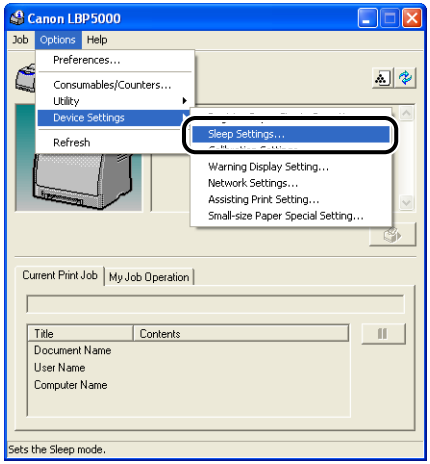

3 Select the [Use Sleep Mode] check box in the [Sleep Settings] dialog box to specify the time to switch to the sleep mode in [Time to Enter Sleep Mode].

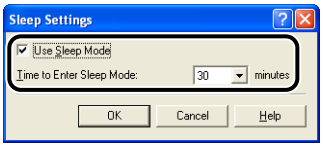

4 Click [OK].

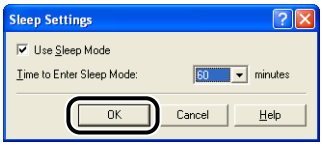

Connecting to a Computer

This section describes how to connect the printer to a computer.

As this printer is equipped with a USB connector, you can use a USB cable to connect to a computer. By installing the optional network board, the printer can be connected directly to the network using a LAN cable.

Using a USB Cable

Connect the printer to a computer equipped with a USB port using a USB cable.

WARNING

When plugging or unplugging the USB cable when the power plug is plugged in an AC power outlet, do not touch the metal part of the connector, as this may result in electrical shock.

IMPORTANT

- Do not plug or unplug the USB cable while the computer and printer are ON, as this may result in damage to the printer.
- This printer uses bi-directional communication. Operation of the printer when connected via unidirectional communication equipment has not been tested, and as a result, Canon cannot guarantee printer operation when the printer is connected using unidirectional print servers, USB hubs or switching devices.

NOTE

- The appropriate USB interface varies depending on the operating system of the connected computer as follows. For more details, contact your local authorized Canon dealer.
  - Windows 98/Me: USB Full-Speed (USB1.1 equivalent)
  - Windows 2000/XP/Server 2003: USB 2.0 Hi-Speed/USB Full-Speed (USB1.1 equivalent)
- When you connect this printer to a computer with a USB cable, use a computer with manufacturer's guarantee of USB proper operation.
- A USB cable is only supplied with 220 - 240 V model for countries and regions of Asia. In other countries and regions, prepare according to the specifications of your computer. Use a USB cable with the following symbol.

1 Make sure that the printer and computer are OFF.

2 Connect the B-type (square) end of the USB cable to the USB connector on the rear side of the printer.

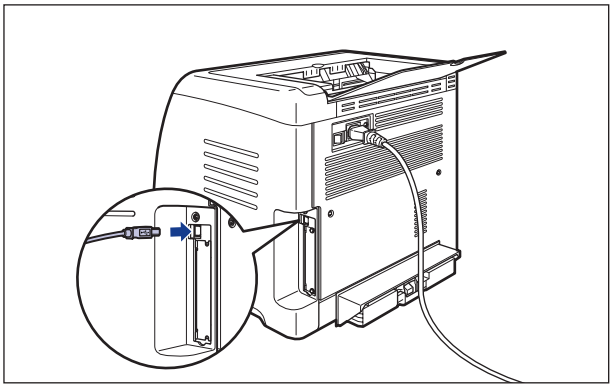

3 Connect the A-type (flat) end of the USB cable to the USB port on the computer.

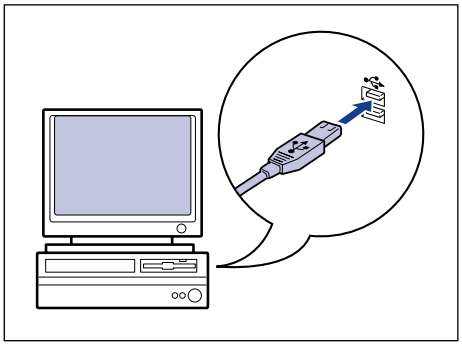

NOTE

- If a Wizard appears after connecting the USB cable by the Plug and Play automatic setup, install the software for this printer using either one of the following procedures. For more details, see "Installing the CAPT Software," on p. 3-4.
  - Click [Cancel] and install the software from CD-ROM Setup.
  - Install with Plug and Play.
- If you are not sure about the USB cable that is supported by the computer you are using, contact the store where you purchased the computer.

Using a LAN Cable

If the optional network board (NB-C1) is installed, the printer can be connected to the network using a Category 5 twisted pair cable. Have cables or a hub ready as needed.

NOTE

- For details on the procedure for installing the network board, see "Network Board," on p. 6-20.
- If this printer is connected to a network, network settings will need to be configured, the printer will need to be installed as a network printer, the print server will need to be configured. For details on these settings, see the instruction manual supplied with the network operating system or "Network Guide".

■ Network Environment

The optional network board supports 10BASE-T/100BASE-TX connections.

- When connecting to a 10BASE-T Ethernet network

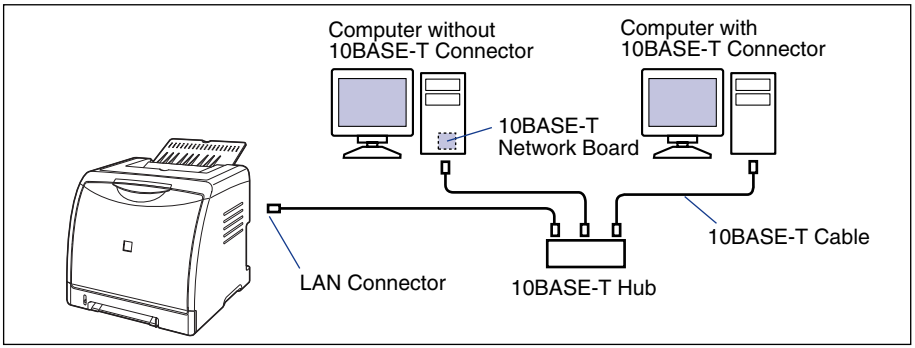

- When connecting to a 100BASE-TX Ethernet network

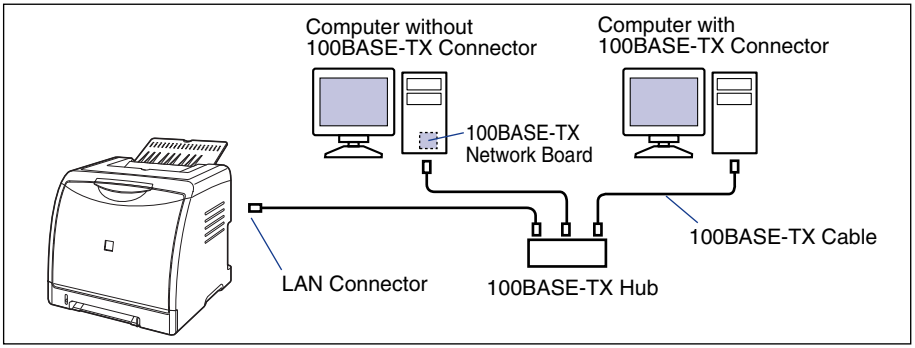

IMPORTANT

- The network board for this printer cannot be connected to networks other than those listed above.
- Make sure that there is a port available on the hub to which the printer will be connected. An additional hub must be installed if there is no free port.

NOTE

When connecting to the 100BASE-TX Ethernet network, all the devices to be connected to LAN, such as hub, LAN cable, and network board for computer, must support 100BASE-TX. For more details, contact your local authorized Canon dealer.

1 Attach the ferrite core to the LAN cable as shown in the figure.

Attach the ferrite core at 5 cm or less from the end of the connector which is connected to the printer.

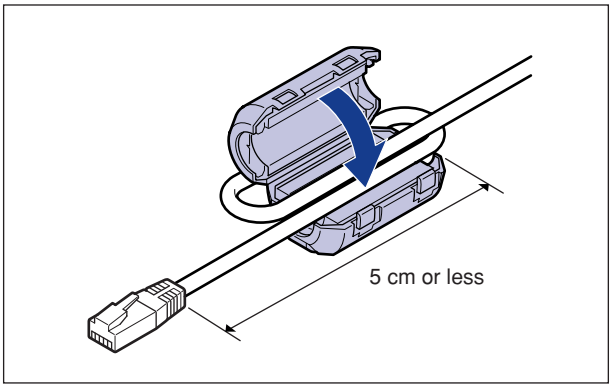

2 Connect the LAN cable to the LAN connector of the network board.

Connect a LAN cable that is compatible with the LAN connector of the network board according to the network.

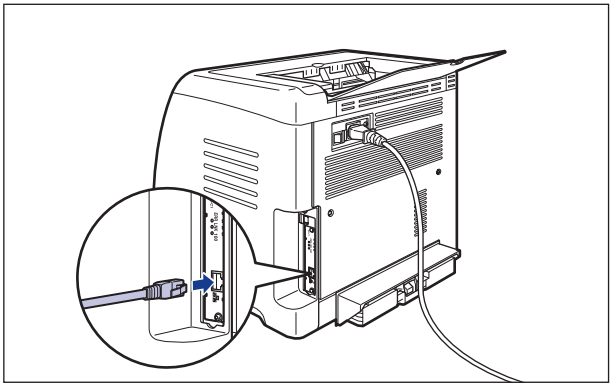

3 Connect the other end of the LAN cable to the hub.

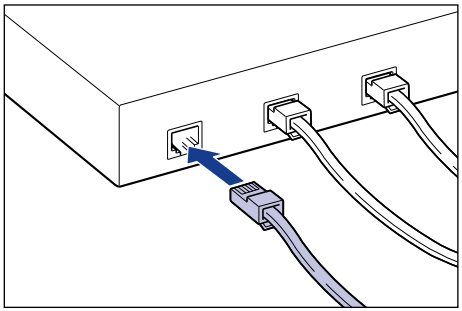

Loading and Outputting Paper

2
CHAPTER

This chapter describes the types of paper that can be used with this printer, and how to load and output paper.

Paper Requirements 2-2
- Usable Paper 2-2
- Printable Area 2-6
- Unusable Paper 2-7
- Storing Paper 2-8
- Storing Printouts 2-8

Paper Source 2-9
- Paper Source Type 2-9
- Paper Capacity of Paper Source 2-10
- Selecting a Paper Source 2-10
- Precautions for Handling the Manual Feed Slot or Paper Cassette 2-12

Output Tray 2-13
- Output Tray 2-13
- Paper Capacity of the Output Tray 2-13

Loading Plain Paper, Heavy Paper, Transparencies, or Labels in the Paper Source 2-14
- Loading Paper in the Paper Cassette 2-14
- Loading Paper in the Manual Feed Slot 2-23

Loading Index Card Size Media in the Paper Source 2-26
- Loading Index Card Size Media in the Paper Cassette 2-26
- Loading Index Card Size Media in the Manual Feed Slot 2-34

Loading Envelopes in the Paper Source 2-37
- Loading Envelopes in the Paper Cassette 2-37
- Loading an Envelope in the Manual Feed Slot 2-44

Loading Custom Size Paper (Non-Standard Paper) in the Paper Source 2-47
- Loading Custom Size Paper in the Paper Cassette 2-47
- Loading Custom Size Paper in the Manual Feed Slot 2-54
- Registering a Custom Paper Size (Non-Standard Paper) 2-56

Setting Up the Printer Driver and Printing 2-59

Paper Requirements

Usable Paper

To ensure optimum performance, use only paper that falls within the specifications in the following lists. Using inappropriate paper may result in deterioration in print quality or paper jams.

IMPORTANT

- Print speed may drop depending on the settings for the paper size, paper type, and print copies. When printing heavy paper, transparencies, labels, or envelopes, the print speed may be as slow as approximately 4 ppm.
- When continuously printing the paper of 195.0 mm wide or less, the safety function that prevents damages caused by heat may slow the print speed down in stages. (The print speed may be as slow as approximately 4 ppm.)

Paper Size

The following shows the paper sizes that can be used with this printer. The symbol "O" indicates paper that can be loaded.

Paper Size	Paper Source		
	Manual Feed Slot	Cassette 1	Cassette 2 (Optional)
A4	O	O	O
B5	O	O	O
A5	O	O	O
Legal	O	O	O
Letter	O	O	O
Executive	O	O	O
Custom Paper Size	O	O	O
Envelope			
Envelope DL 110.0 mm x 220.0 mm	O	O	O
Envelope COM10 104.9 mm x 241.3 mm	O	O	O
Envelope C5 162.0 mm x 229.0 mm	O	O	O

Paper Size	Paper Source		
	Manual Feed Slot	Cassette 1	Cassette 2 (Optional)
Envelope Monarch 98.5 mm x 190.5 mm	O	O	O
Envelope B5 176.0 mm x 250.0 mm	O	O	O
Index Card 76.2 mm x 127.0 mm	O	O	O

Paper Type

The following shows the paper types that can be used with this printer. The symbol "O" indicates paper that can be loaded.

Paper Type		Printer Driver Setting	Paper Source		
			Manual Feed Slot	Cassette 1	Cassette 2 (Optional)
Plain paper	60 - 74 g/m^2	[Plain Paper L]	O	O	O
	75 - 90 g/m^2	[Plain Paper]	O	O	O
Heavy paper	91 - 120 g/m^2	[Heavy Paper 1]	O	O	O
	121 - 163 g/m^2	[Heavy Paper 2]	O	O	O
Transparencies (Black and white printing only)		[Transparency]	O	O	O
Labels		[Label]	O	O	O
Envelopes		*	O	O	O

* When printing envelopes, the printer automatically applies the appropriate print mode to the envelope type by specifying [Output Size] in the [Page Setup] sheet.

■ Plain Paper

This printer can print plain paper that is 76.2 to 215.9 mm wide, 127.0 to 355.6 mm long, and that weighs between 60 and 90 g/m^2, including the standard paper sizes: A4, B5, A5, Legal, Letter, and Executive.

■ Heavy Paper

This printer can print heavy paper that is 76.2 to 215.9 mm wide, 127.0 to 355.6 mm long, and that weighs between 91 and 163 g/m^2, including the standard paper sizes: A4, B5, A5, Legal, Letter, and Executive.

IMPORTANT

Printing speed drops when printing heavy paper.

■ Transparency

This printer can print A4 and Letter size transparencies.

IMPORTANT

- Transparencies can only be printed in black and white.
- Thoroughly fan the transparencies before loading them as they may stick to each other.
- Printing speed drops when printing transparencies.

■ Label

This printer can print A4 and Letter size labels.

IMPORTANT

- Do not use the labels in the following conditions. Using inappropriate labels may result in paper jams that are difficult to clear or may result in damage to the printer.
  - Peeled labels or partly used labels
  - Coated labels that are easily peeled off from the backing sheet
  - Labels with uneven adhesive
- Printing speed drops when printing labels.

■ Index Card

This printer can print Index Card size media.

■ Envelope

The envelopes that can be used with this printer are as follows:

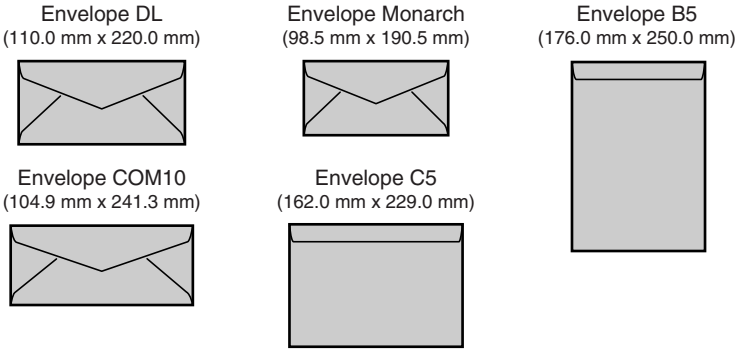

*You cannot use envelopes at sizes of DL, COM 10, Monarch, and C5 that have a flap on the short edge.

IMPORTANT

- Do not use the following types of envelopes. Using inappropriate envelopes may result in paper jams that are difficult to clear or may result in damage to the printer.
  - Envelopes with fasteners or snaps
  - Envelopes with address windows
  - Envelopes with adhesive on the surface
  - Wrinkled or creased envelopes
  - Poorly manufactured envelopes in which the glued parts are uneven
  - Irregularly-shaped envelopes

- Before loading the envelopes, flatten the stack of envelopes to release any remaining air, and press the fold lines along the edges tight.
- Do not print on the reverse side (glued side) of envelopes.
- When loading envelopes at sizes of DL, COM10, C5, or Monarch, load them so that the flap is toward the right of the printer when viewed from the front.
  (⬅: Feeding direction)

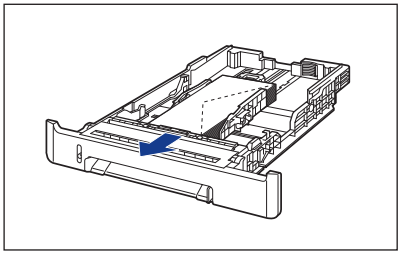

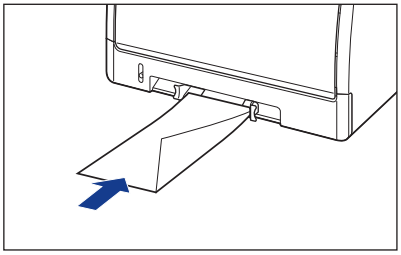

- When printing envelopes of the Envelope B5 size, close the flaps and load them so that the envelopes are printed from the top (the edge with the flap).
  (⬅: Feeding direction)

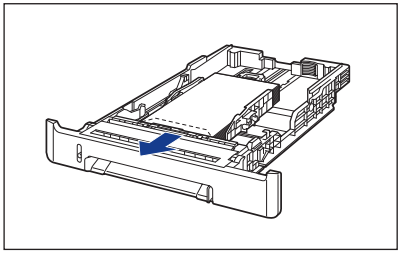

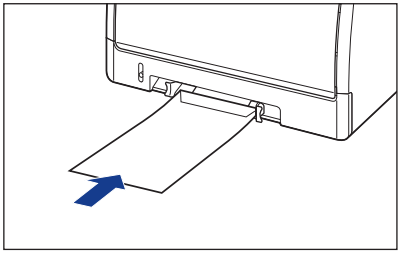

- Printing speed drops when printing envelops.

NOTE

When printing envelopes, they may be creased.

Abbreviations of Paper Sizes

The following shows the abbreviations of paper sizes that are marked on the paper cassette.

Paper Size	Paper Guides
Letter	LTR
Executive	EXEC

Printable Area

The following shows the printable area of this printer: If you have selected the [Print with Upper Left of Sheet as Starting Point] check box in the [Finishing Details] dialog box in the printer driver, however, you can extend the printable area to near the edges of the paper. For more details, see Online Help in the printer driver.

■ Plain Paper/Heavy Paper/Transparency/Label

You cannot print on any area within 5 mm of the edges of paper.

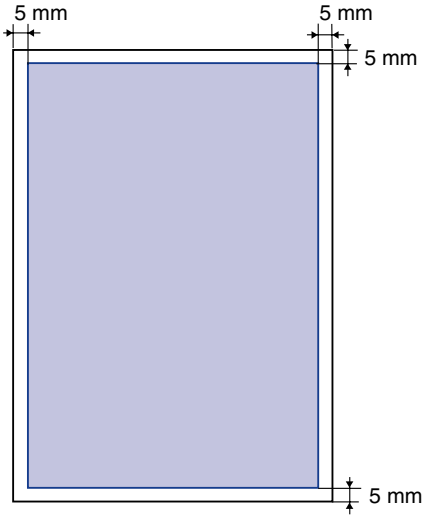

■ Envelope

You cannot print on any area within 10 mm of the edges of an envelope.
You may have to change the printable area before printing, depending on the application you use.

(Sample: Envelope COM10)

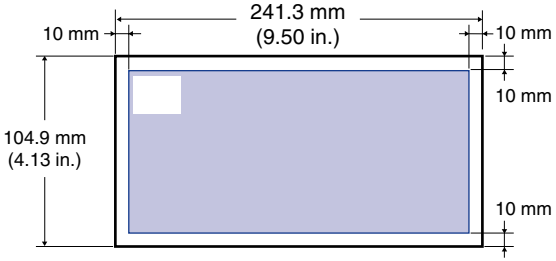

Unusable Paper

To avoid problems such as paper jams and other malfunctions, the following types of paper should never be used:

IMPORTANT

- Paper that jams easily
  - Paper that is too thick or too thin
  - Irregularly-shaped paper
  - Wet or moist paper
  - Torn or damaged paper
  - Rough, extremely smooth, or glossy paper
  - Paper with binding holes or perforations
  - Curled or creased paper
  - Specially coated paper (coated paper for ink jet printers, etc.)
  - Labels with backing sheet that is easily peeled off
  - Paper that has already been printed by a copy machine or another laser printer (The reverse side of the paper is also unusable.)
  - Paper with jagged edges
  - Wrinkled paper
  - Paper with the corners folded
- Paper that changes its quality at a high temperature
  - Paper that contains ink that melts, burns, evaporates or emits harmful gases with the heat (approx. 180°C or 356°F) of the fixing unit
  - Heat-sensitive paper
  - Treated color paper
  - Specially coated paper (coated paper for ink jet printers, etc.)
  - Paper with adhesive on the surface
- Paper that causes printer malfunctions or damages the printer
  - Carbon paper
  - Paper with staples, clips, ribbons or tapes
  - Paper that has already been printed by a copy machine or another laser printer (The reverse side of the paper is also unusable.)
- Paper that is difficult for the toner to fix onto
  - Paper with rough surfaces
  - Specially coated paper (coated paper for ink jet printers, etc.)
  - Paper containing thick fibers

Storing Paper

The quality of paper may deteriorate if it is stored improperly even when the paper meets the normal specifications. Inferior paper may cause misfeeds, paper jams, or deterioration in print quality.
Observe the following guidelines when storing and handling paper:

IMPORTANT

- Store paper away from moisture since paper quality deteriorates in a moist environment.
- Paper wrappers help avoiding moisture and dryness. Keep paper in the wrapper until it is ready to be used. Store all unused paper in a wrapper.
- Store paper on a flat surface.
- Do not store paper on the floor where water and moisture can accumulate.
- Avoid physical damage to stored paper.
- Do not store paper vertically or store too many stacks of paper in one pile.
- Do not store paper in places exposed to direct sunlight or places with high or low humidity.
- If the paper storage room and work area differ from each other significantly in temperature or humidity, keep packed paper stack in the work area for at least one day prior to printing so that it can adapt to the new environment. When paper is moved to a location where the temperature or humidity differs significantly, the paper may curl or become creased.

Storing Printouts

When handling or storing printouts printed by this printer, be careful of the following points:

IMPORTANT

- Avoid storing printouts with PVC materials such as clear folders. Otherwise toner may melt and stick to the PVC material.
- Use insoluble adhesive when gluing printouts. Toner may melt when soluble adhesive is used. Before using the adhesive, test it with paper that is no longer required.
  Make sure that the printed paper is completely dry before placing one over another. Toner may melt if they are placed together half-dried.
- Store paper on a flat surface. Toner may peel when they are folded or creased.
- Avoid storing printouts at high temperatures. Otherwise toner may melt and blot.
- Put printouts in a binder when storing them for a long period of time (two years or longer). (Printouts may discolor when they are stored for a long period of time.)

Paper Source

This printer is supplied with two paper sources: the paper cassette (Cassette 1) and manual feed slot. By installing the optional paper feeder (Cassette 2), up to 3 paper sources can be used.

● **Paper Level Indicator**

The paper cassette has a paper level indicator (A) that shows the amount of paper remaining in the cassette. If the cassette is full, the paper level indicator is at the top. Because the indicator moves down as the amount of paper drops, this gives a rough estimate of the amount of paper remaining.

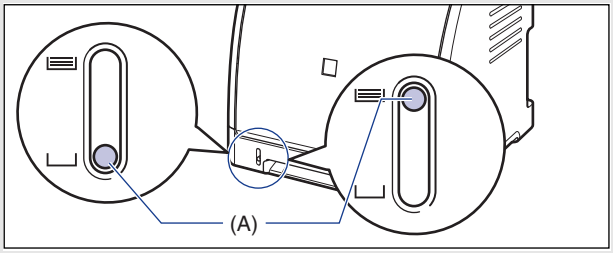

Paper Source Type

This printer has the following paper sources:

(A): Manual Feed Slot
(B): Cassette 1
(C): Cassette 2 (Optional)

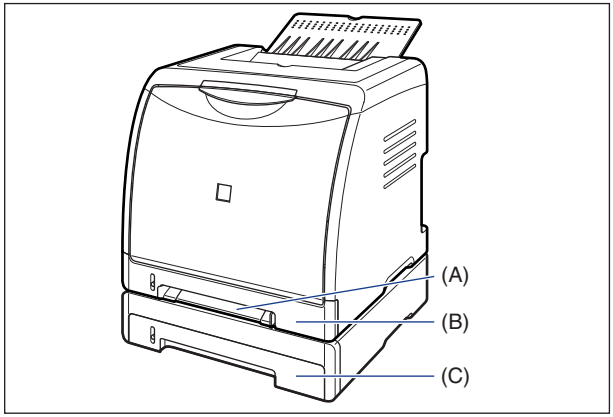

IMPORTANT

If you are printing from Cassette 2, make sure that Cassette 1 is set before printing. If you print from Cassette 2 when Cassette 1 is not set, this will cause paper jams.

Paper Capacity of Paper Source

Paper Type	Paper Source		
	Manual Feed Slot	Cassette 1	Cassette 2 (Optional)
Plain paper (64 g/m^2)	1 sheet	Approx. 250 sheets	Approx. 250 sheets
Heavy paper (128 g/m^2)	1 sheet	Approx. 170 sheets	Approx. 170 sheets
Transparency (Black and white printing only)	1 sheet	Approx. 50 sheets	Approx. 50 sheets
Label	1 sheet	Approx. 100 sheets	Approx. 100 sheets
Envelope	1 sheet	Approx. 10 sheets	Approx. 10 sheets

Selecting a Paper Source

A paper source can be selected in the [Paper Source] sheet in the printer driver.

1 Display the [Paper Source] sheet and specify the paper source.

For details on the procedure for displaying the [Paper Source] sheet in the printer driver, see "Specifying the Printing Preferences," on p. 4-9.

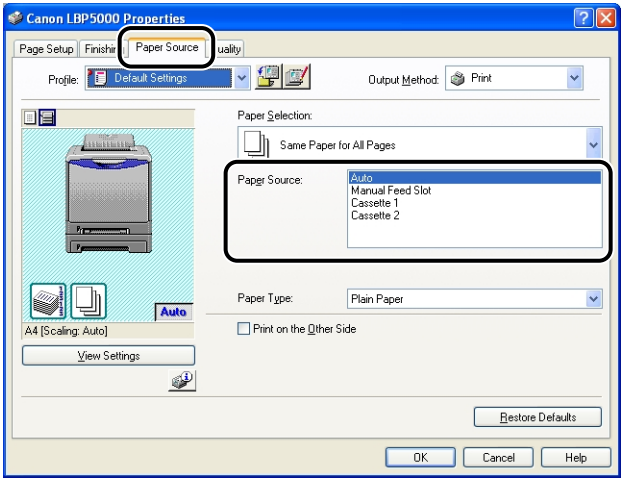

2 Specify the following options as needed.

Setting	Setting Value	Description
[Paper Selection]	[Same Paper for All Pages]	Feeds all the pages from the same paper source.
	[Different for First, Others, and Last]	Paper can be selected for each page, such as for printing the front cover on a different type of paper.
	[Different for First, Second, Others, and Last]	
[Paper Source]	[Auto] [Manual Feed Slot] [Cassette 1] [Cassette 2]*	Select a paper source. Options to be specified differ depending on the setting for [Paper Selection].
[First Page]		
[Second Page]		
[Other Pages]		
[Last Page]		
[Paper Type]	[Plain Paper] [Plain Paper L] [Heavy Paper 1] [Heavy Paper 2] [Transparency] [Label]	Specify the type of paper. (See p. 2-3)
[Print on the Other Side]	-	It is not recommended to print the other side of previously printed paper. However, if you have to print on both sides of paper, select the [Print on the Other Side] check box when printing the other side of the previously printed paper.

* This option can be specified only when the optional paper feeder is installed.

3 Confirm the settings, then click [OK].

Precautions for Handling the Manual Feed Slot or Paper Cassette

Be careful of the following points when handling the manual feed slot or paper cassette.

IMPORTANT

- When any paper is in the manual feed slot, you cannot feed paper from the paper cassette. If you are printing from the paper cassette, remove any paper loaded in the manual feed slot.
- Do not pull out the paper cassette while the printer is printing. This may result in paper jams or damage to the printer.
- Do not touch the paper in the manual feed slot or pull it out during printing. This may result in a faulty operation.
- Refill the paper cassette after all the loaded paper runs out. If the cassette is refilled when paper still remains in the cassette, it may result in misfeeds.
- Do not load paper in the manual feed slot during printing from the paper cassette. This may result in multiple sheets of paper fed at once or paper jams.
- Do not touch the black rubber pad (A) in the paper cassette. This may result in misfeeds.

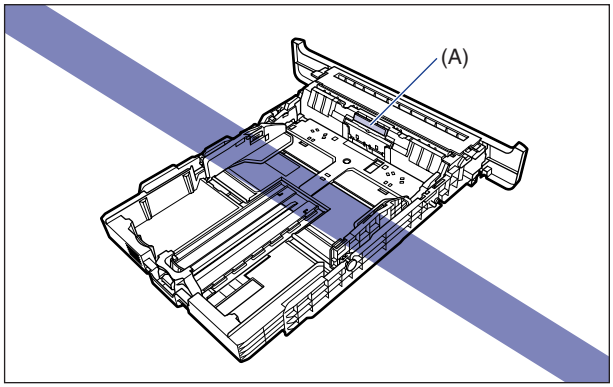

- If you are printing from Cassette 2, make sure that Cassette 1 is set before printing. If you print from Cassette 2 when Cassette 1 is not set, this will cause paper jams.

Output Tray

Output Tray

Printed paper is output to the output tray on top of the printer unit with the printed side facing down. Printed paper is output in order of page.

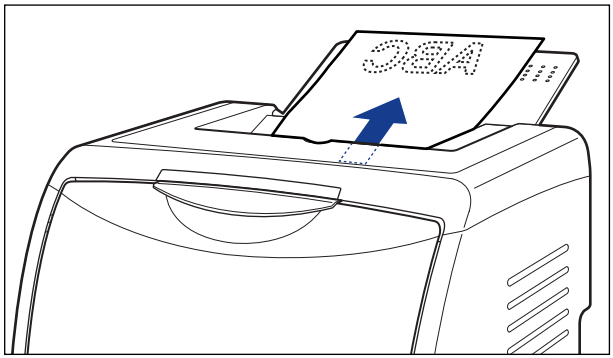

NOTE

- Close the output tray to prevent dust from entering into the printer when you are not using it.
- The output tray can hold up to approximately 125 sheets of plain paper (When the paper weighs 64 g/m^2).

Paper Capacity of the Output Tray

Paper Type	Output Tray* Output Tray (Face-down)
Plain paper (When plain paper that weighs 64 g/m ^{2} is used)	Approx. 125 sheets
Heavy paper (When heavy paper that weighs128 g/m^2 is used)	Approx. 50 sheets
Transparency (Black and white printing only)	Approx. 10 sheets
Label	Approx. 10 sheets
Envelope	Approx. 10 sheets

* Actual paper capacity varies depending on the installation environment or paper type.

Loading Plain Paper, Heavy Paper, Transparencies, or Labels in the Paper Source

This section describes the procedure for loading plain paper, heavy paper, transparencies, or labels in the paper source.

The paper source that you can load paper is the paper cassette and manual feed slot. If you want to print continuously, load the paper in the paper cassette.
When printing only a sheet of paper that is different in size or type from the one loaded in the paper cassette, load the paper in the manual feed slot.

IMPORTANT

- For more details on the usable paper, see "Usable Paper," on p. 2-2.
- For details on handling the manual feed slot or paper cassette, see "Precautions for Handling the Manual Feed Slot or Paper Cassette," on p. 2-12.
- Transparencies can only be printed in black and white.
- Printing speed drops when printing heavy paper, transparencies, or labels.

NOTE

- For details on the procedure for printing Index Card size media, see "Loading Index Card Size Media in the Paper Source," on p. 2-26.
- For details on the procedure for printing custom size paper, see "Loading Custom Size Paper (Non-Standard Paper) in the Paper Source," on p. 2-47.

Loading Paper in the Paper Cassette

Load paper in the paper cassette using the following procedure.
Be sure to load paper in portrait orientation when loading it in the paper cassette.

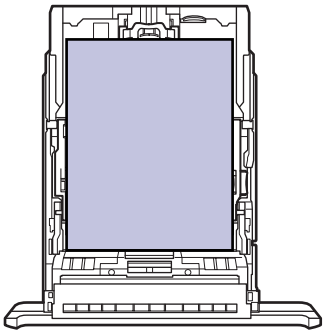

NOTE

Load paper in Cassette 2 (Only when the optional paper feeder is installed) in the same manner as you load paper in Cassette 1.

1 Pull out the paper cassette.

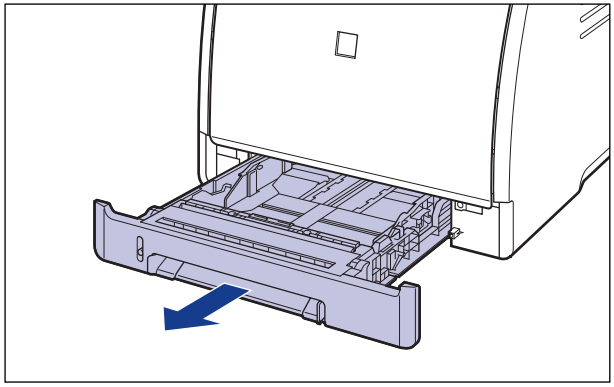

CAUTION

Be sure to take the paper cassette out of the printer before loading paper. If paper is loaded while the paper cassette is partially pulled out, the paper cassette may drop or the printer may become damaged resulting in personal injury.

2 When changing the size of the paper to be loaded, adjust the length of the paper cassette and change the positions of the paper guides.

- **When loading Legal size paper, adjust the length of the paper cassette while holding the lock release lever shown in the figure.**

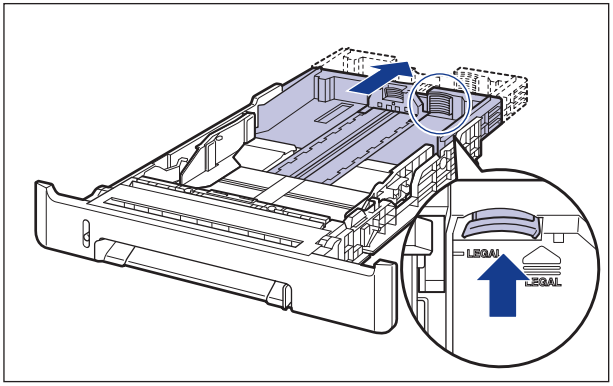

- **While holding the lock release lever of the side paper guides, slide the guides to the mark for the size of the paper to be loaded.**

The side paper guides move together. Align the position of (A) with the mark for the size of the paper to be loaded.

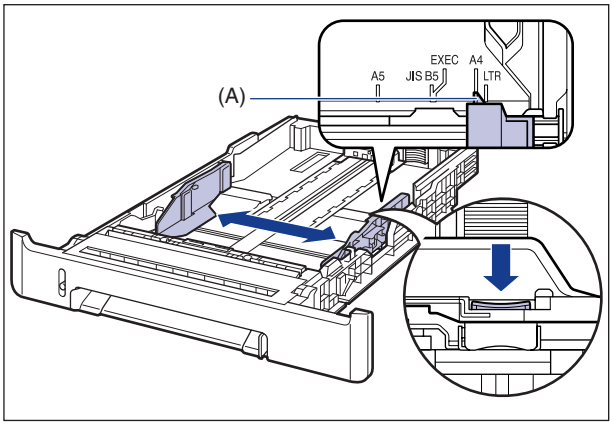

NOTE

If you are using B5 size paper (182 mm x 257 mm), set the paper guide to "JIS B5".

- **While holding the lock release lever of the rear paper guide, slide the guide to the size mark for the paper to be loaded.**

  Align the position of (A) with the mark for the size of the paper to be loaded.

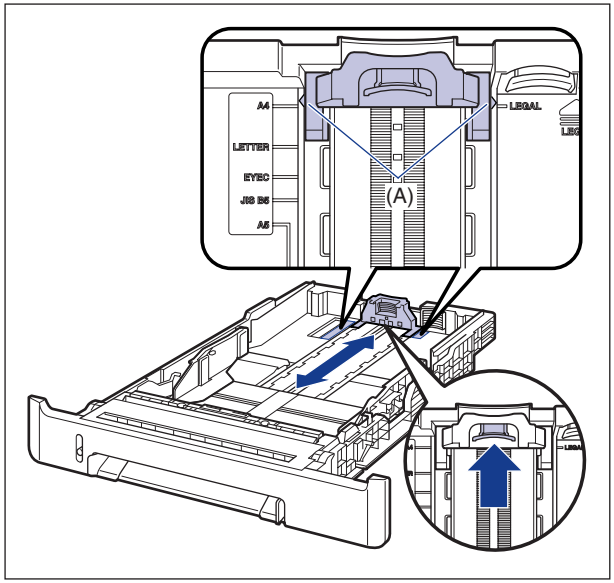

3 Before loading transparencies or labels, fan them in small batches and align the edges.

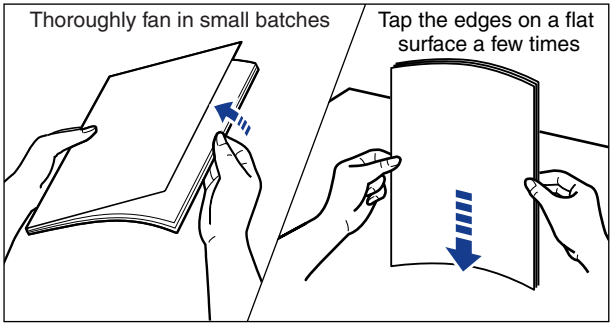

CAUTION

Take care not to cut your hands with the edges of transparencies or labels.

IMPORTANT

- Be sure to fan the transparencies or labels thoroughly before loading them. If they are not fanned enough, multiple sheets of paper may be fed at once, causing paper jams.

- When fanning or aligning the transparencies, try to hold the edges to avoid touching the printing surface.
- Take care not to mark or stain the printing surface of the transparencies with fingerprints, dust, or oil. This may result in poor print quality.

4 Load the paper stack so that the rear edge is aligned with the paper guide.

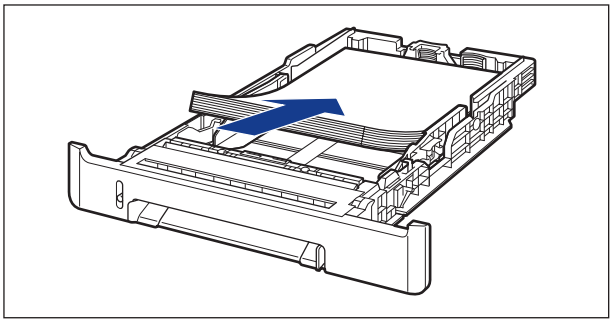

CAUTION

When loading paper, take care not to cut your hands with the edges of the paper.

IMPORTANT

- Be sure to check if the paper guide is at the position of the size of the loaded paper. If the paper guide is set at a wrong position, this may result in misfeeds.
- If you use paper that has been poorly cut, multiple sheets of paper may be fed at once. In this case, fan the paper thoroughly, and then align the edges of the stack on a hard, flat surface.

NOTE

To print letterhead paper or paper printed with a logo, load the paper so that the printing side is facing up, as shown in the following figure.
(⬅ : Feeding direction)

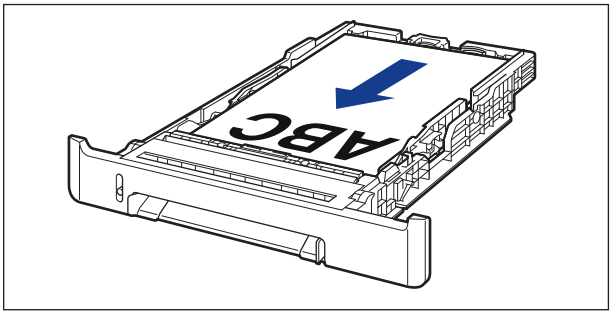

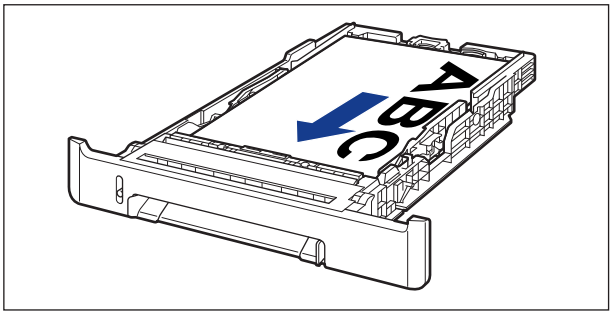

5 Hold down the paper as shown in the figure, make sure that the paper stack does not exceed the load limit marks (A), and then set it under the hooks (B) on the paper guides.

Make sure that there is sufficient space between the hooks of the paper guides and the paper stack. If there is no sufficient space, slightly reduce the amount of paper.

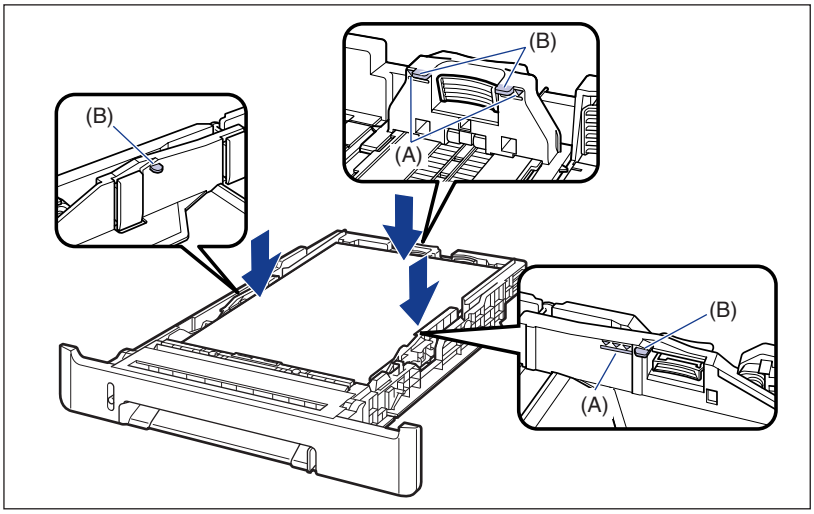

IMPORTANT

The following shows the paper capacity of the paper cassette. Be sure that the paper stack does not exceed the load limit marks. If the paper stack exceeds the load limit marks, this may result in misfeeds.

- Plain paper	Approx. 250 sheets (When plain paper that weighs 64 g/m^2 is used)
- Heavy paper	Approx. 170 sheets (When heavy paper that weighs 128 g/m^2 is used)
- Transparency	Approx. 50 sheets
- Label	Approx. 100 sheets

6 Set the paper cassette in the printer.

Push the paper cassette into the printer firmly until the front side of the cassette is flush with the front surface of the printer.

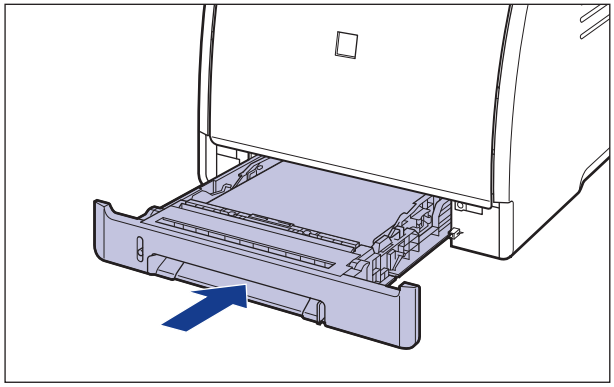

7 Register the size of the loaded paper using the following procedure.

This printer's paper cassette cannot automatically detect the paper size. Therefore, you need to register the size of the loaded paper.

8 Display the Printer Status Window.

For details on methods for displaying the Printer Status Window, see "Displaying the Printer Status Window," on p. 4-88.

9 From the [Options] menu, select [Device Settings] → [Register Paper Size in Cassettes].

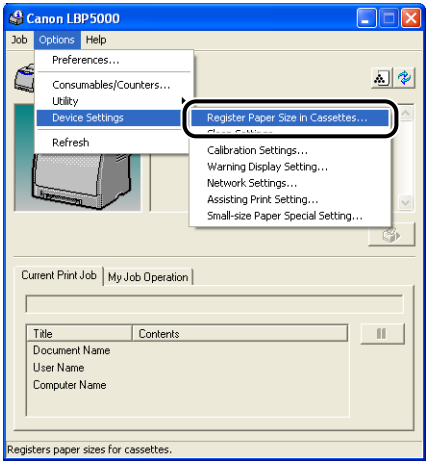

10 Select the size of the paper loaded in the paper cassette, then click [OK].

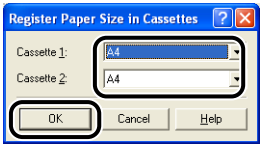

Next, configure the printer driver (See p. 2-59).

Loading Paper in the Manual Feed Slot

Load paper in the manual feed slot using the following procedure.
Be sure to load paper in portrait orientation when loading it in the manual feed slot.

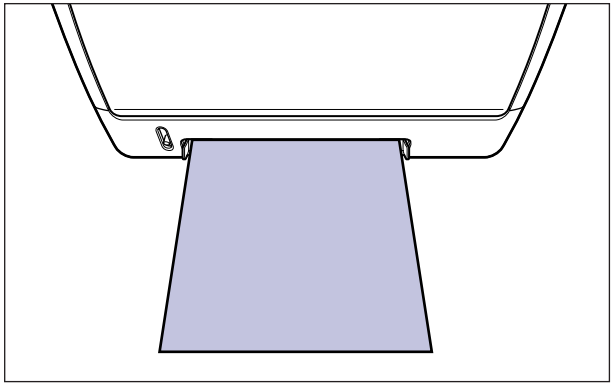

1 **Adjust the paper guides to the width of the loaded paper as shown in the figure.**

The paper guides move together.

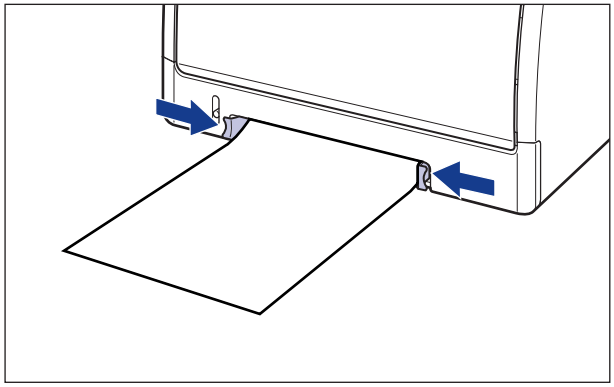

IMPORTANT

Be sure to align the paper guides with the width of the paper. If the paper guides are too loose or too tight, this may result in misfeeds or paper jams.

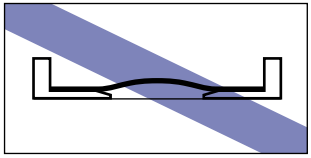

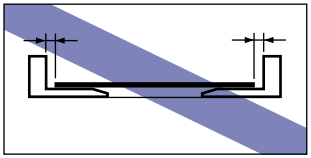

NOTE

To print letterhead paper or paper printed with a logo, load the paper so that the printing side is facing down, as shown in the following figure.
(⬅ : Feeding direction)

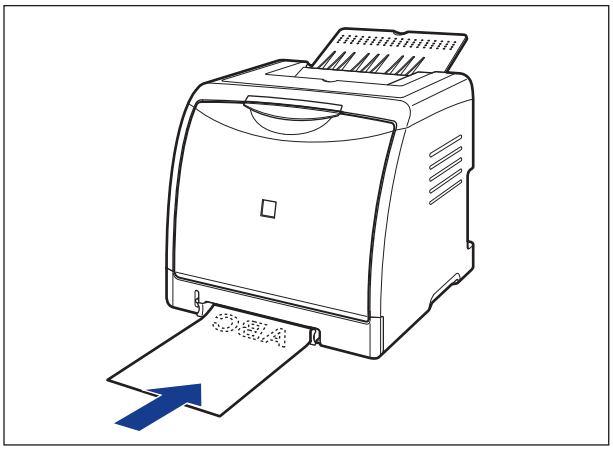

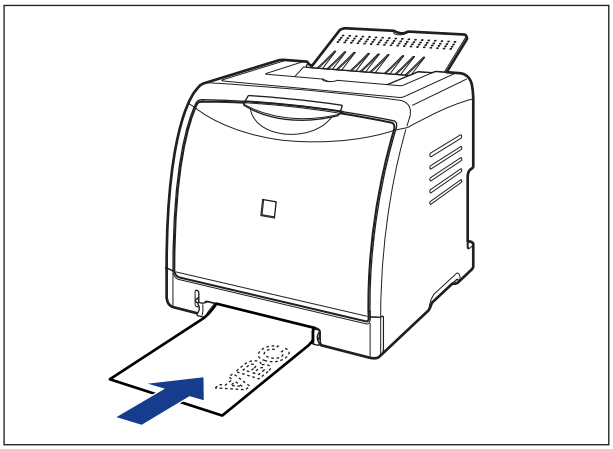

2 Gently insert the paper until it touches the back of the printer while supporting the paper with hands as shown in the figure.

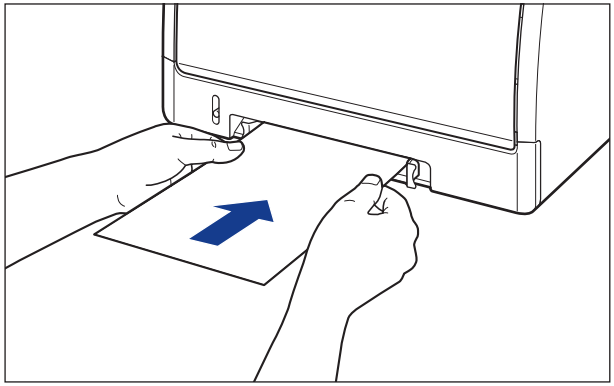

When the paper is loaded, it is sent into the slot a little.

CAUTION

When loading paper, take care not to cut your hands with the edges of the paper.

IMPORTANT

- Load the paper so that it is straight.
- If the paper is curled or folded at corners, flatten it before loading it in the printer.

Next, configure the printer driver (See p. 2-59).

Loading Index Card Size Media in the Paper Source

This section describes the procedure for loading Index Card size media in the paper source.

The paper source that you can load Index Card size media is the paper cassette and manual feed slot. If you want to print continuously, load the Index Card size media in the paper cassette.
When printing only a sheet of paper that is different in size or type from the one loaded in the paper cassette, load the Index Card size media in the manual feed slot.

IMPORTANT

For details on handling the manual feed slot or paper cassette, see "Precautions for Handling the Manual Feed Slot or Paper Cassette," on p. 2-12.

Loading Index Card Size Media in the Paper Cassette

Load Index Card size media in the paper cassette using the following procedure. Be sure to load Index Card size media in portrait orientation when loading it in the paper cassette.

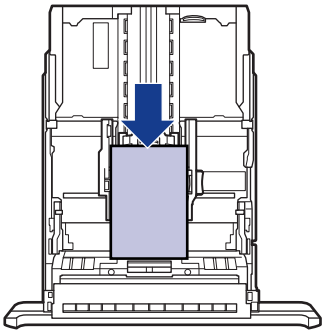

NOTE

Load Index Card size media in Cassette 2 (Only when the optional paper feeder is installed) in the same manner as you load Index Card size media in Cassette 1.

1 Pull out the paper cassette.

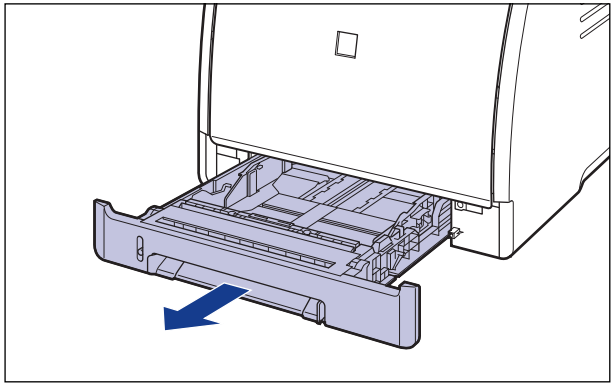

CAUTION

Be sure to take the paper cassette out of the printer before loading paper. If paper is loaded while the paper cassette is partially pulled out, the paper cassette may drop or the printer may become damaged resulting in personal injury.

2 Before loading labels of Index Card size, fan them in small batches and align the edges.

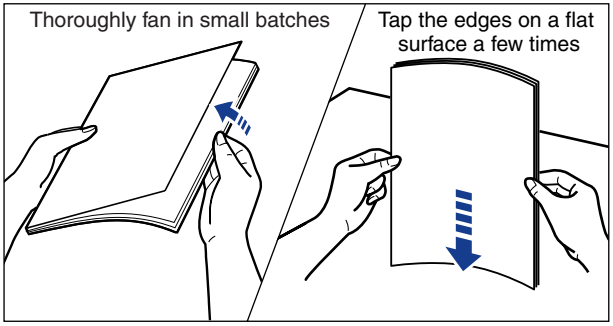

CAUTION

Take care not to cut your hands with the edges of labels.

IMPORTANT

Be sure to fan the labels thoroughly before loading them. If they are not fanned enough, multiple sheets of paper may be fed at once, causing paper jams.

3 Load the Index Card size media so that the edge of the media is aligned with the front side of the paper cassette.

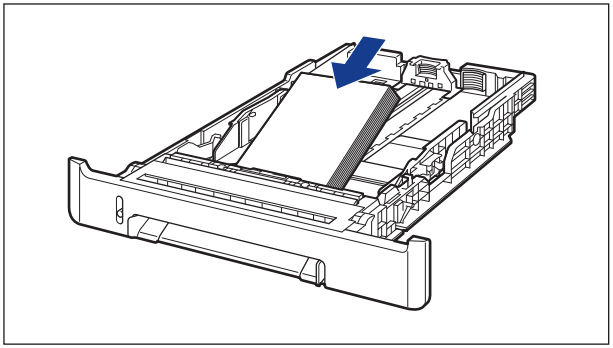

CAUTION

When loading paper, take care not to cut your hands with the edges of the paper.

IMPORTANT

If you use Index Card size media that has been poorly cut, multiple sheets of that may be fed at once. In this case, fan the Index Card size media thoroughly, and then align the edges of the stack on a hard, flat surface.

NOTE

To print letterhead paper or paper printed with a logo, load the paper so that the printing side is facing up, as shown in the following figure.
(⬅ : Feeding direction)

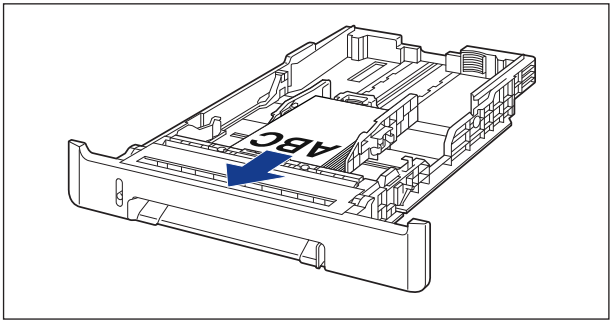

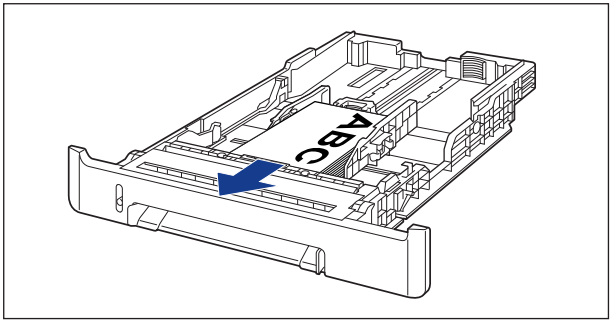

4 While holding the lock release lever of the side paper guides, slide the guides to the mark for the size of the loaded Index Card size media.

The side paper guides move together.

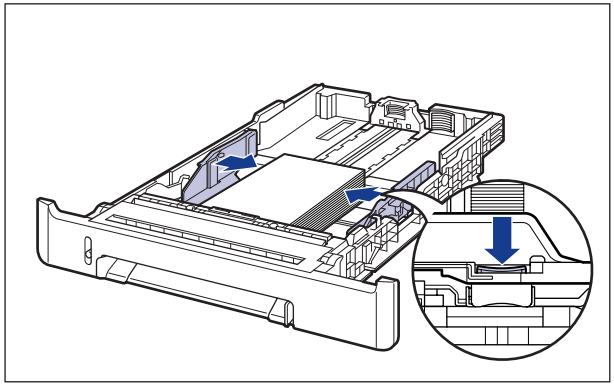

IMPORTANT

Be sure to align the paper guides with the width of the Index Card size media. If the paper guides are too loose or too tight, this may result in misfeeds or paper jams.

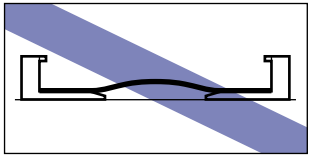

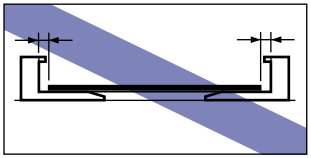

5 **While holding the lock release lever of the rear paper guide, slide the guide to the size mark for the loaded Index Card size media.**

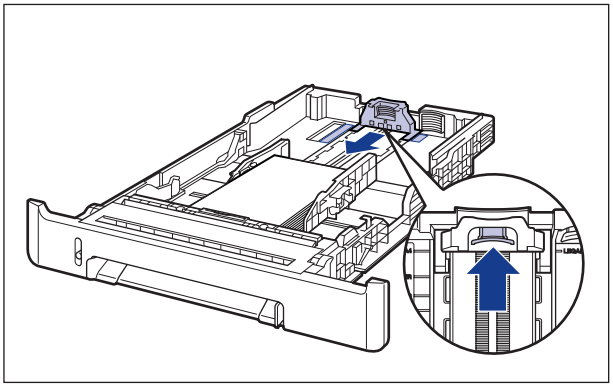

6 Hold down the Index Card size media as shown in the figure, make sure that the stack does not exceed the load limit marks (A), and then set it under the hooks (B) on the paper guides.

Make sure that there is sufficient space between the hooks of the paper guides and the stack of the Index Card size media. If there is no sufficient space, slightly reduce the amount of Index Card size media.

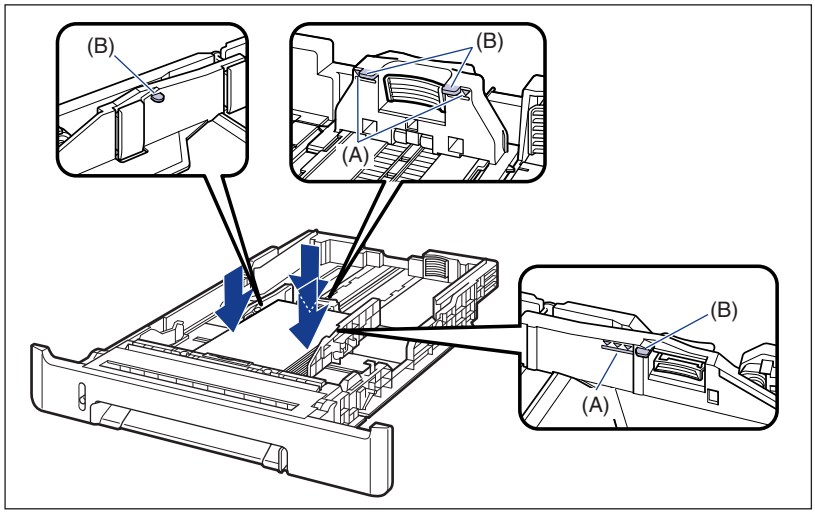

IMPORTANT

The following shows the paper capacity of the paper cassette. Be sure that the paper stack does not exceed the load limit marks. If the paper stack exceeds the load limit marks, this may result in misfeeds.

- Plain paper	Approx. 250 sheets (When plain paper that weighs 64 g/m^2 is used)
- Heavy paper	Approx. 170 sheets (When heavy paper that weighs 128 g/m^2 is used)
- Label	Approx. 100 sheets

7 Set the paper cassette in the printer.

Push the paper cassette into the printer firmly until the front side of the paper cassette is flush with the front surface of the printer.

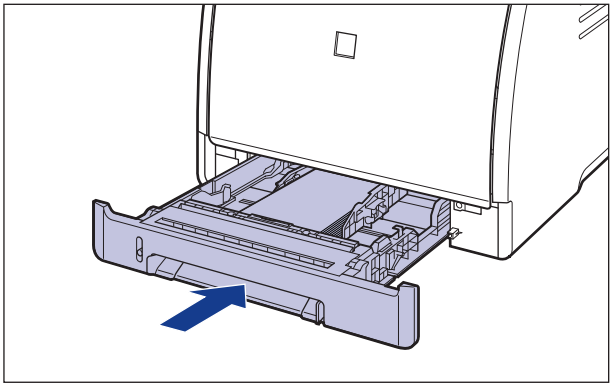

8 Register the size of the loaded paper using the following procedure.

This printer's paper cassette cannot automatically detect the paper size. Therefore, you need to register the size of the loaded paper.

9 Display the Printer Status Window.

For details on methods for displaying the Printer Status Window, see "Displaying the Printer Status Window," on p. 4-88.

10 From the [Options] menu, select [Device Settings] → [Register Paper Size in Cassettes].

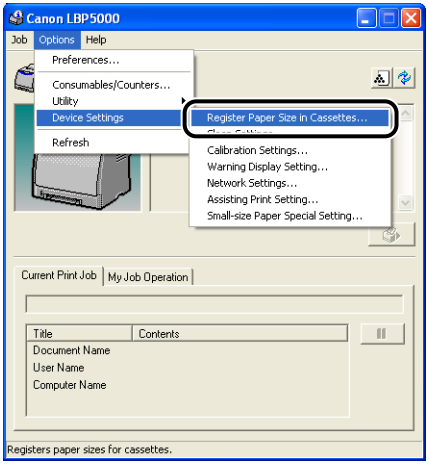

11 Select [Index Card], then click [OK].

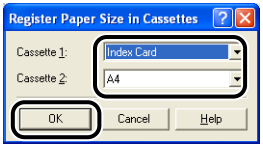

Next, configure the printer driver (See p. 2-59).

Loading Index Card Size Media in the Manual Feed Slot

Load Index Card size media in the manual feed slot using the following procedure. Be sure to load Index Card size media so that the printing side is facing down when loading it in the manual feed slot.

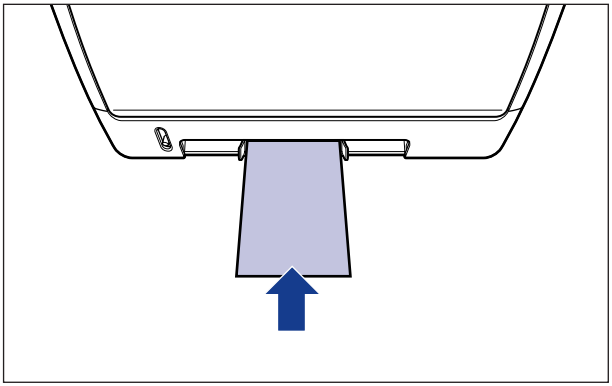

1 **Adjust the paper guides to the width of the loaded Index Card size media as shown in the figure.**

The paper guides move together.

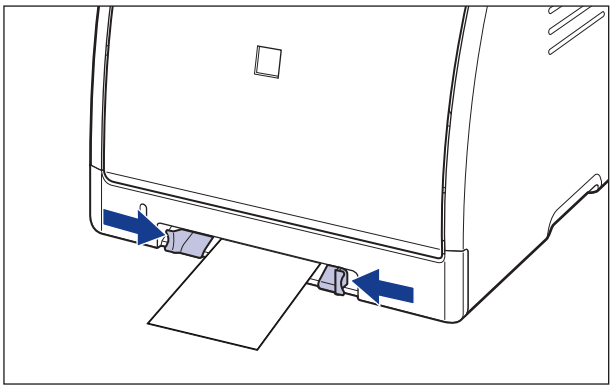

IMPORTANT

Be sure to align the paper guides with the width of the Index Card size media. If the paper guides are too loose or too tight, this may result in misfeeds or paper jams.

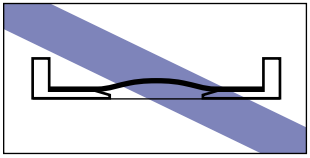

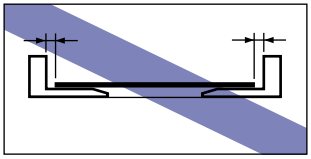

NOTE

To print letterhead paper or paper printed with a logo, load the paper so that the printing side is facing down, as shown in the following figure.
(⬅ : Feeding direction)

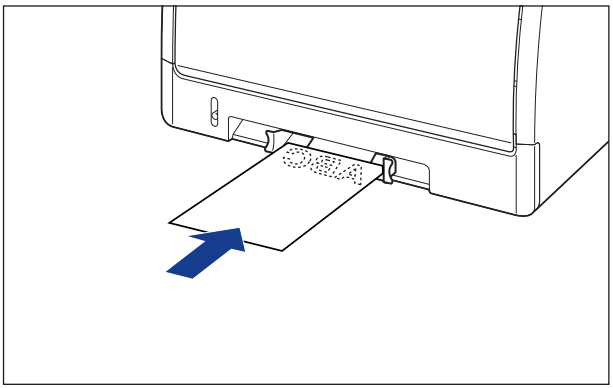

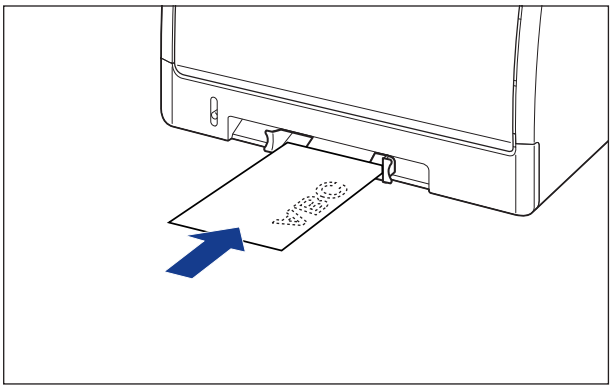

2 Gently insert the paper until it touches the back of the printer while supporting the Index Card size media with hands as shown in the figure.

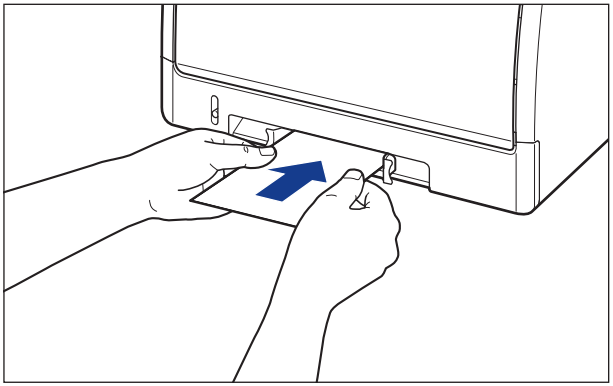

When the paper is loaded, it is sent into the slot a little.

CAUTION

When loading paper, take care not to cut your hands with the edges of the paper.

IMPORTANT

- Load the Index Card size media so that it is straight.
- If the Index Card size media is curled, flatten the curls by warping it in the opposite direction before loading it.

Next, configure the printer driver (See p. 2-59).

Loading Envelopes in the Paper Source

This section describes the procedure for loading envelopes in the paper source.

The paper source that you can load envelopes is the paper cassette and manual feed slot. If you want to print continuously, load the envelopes in the paper cassette. When printing only one envelope that is different from those loaded in the paper cassette, load the envelope in the manual feed slot.

IMPORTANT

- For more details on the usable envelopes, see "Usable Paper," on p. 2-2.
- For details on handling the manual feed slot or paper cassette, see "Precautions for Handling the Manual Feed Slot or Paper Cassette," on p. 2-12.

Loading Envelopes in the Paper Cassette

Load envelopes in the paper cassette using the following procedure.

- When loading envelopes at sizes of DL, COM10, C5, or Monarch in the paper cassette, load them in portrait orientation so that the printing side is facing up and the flap is toward the right of the printer when viewed from the front.
  (⬅ : Feeding direction)

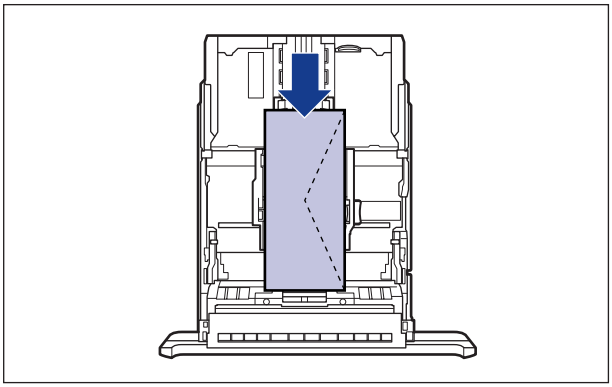

- When printing envelopes of the Envelope B5 size, close the flaps and load them so that the printing side is facing up and the envelopes are printed from the top (the edge with the flap).
  (⬅ : Feeding direction)

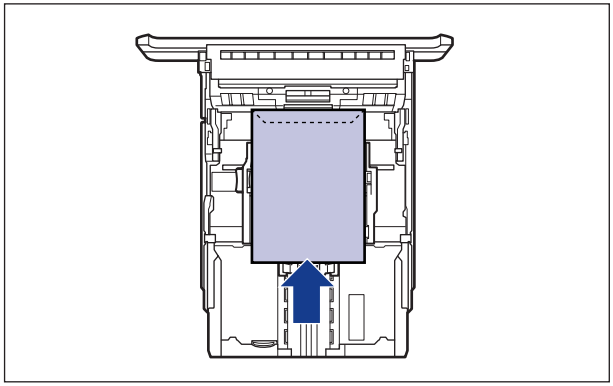

NOTE

Load envelopes in Cassette 2 (Only when the optional paper feeder is installed) in the same manner as you load envelopes in Cassette 1.

1 Pull out the paper cassette.

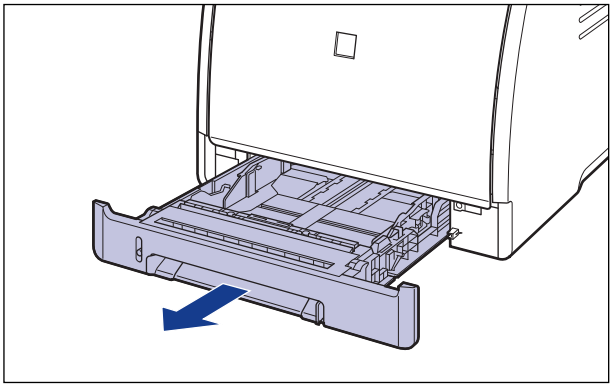

CAUTION

Be sure to take the paper cassette out of the printer before loading paper. If paper is loaded while the paper cassette is partially pulled out, the paper cassette may drop or the printer may become damaged resulting in personal injury.

2 Place the stack of envelopes on a flat surface, flatten them to release any remaining air, and be sure that the edges are pressed tightly.

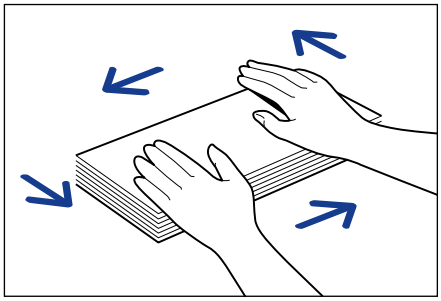

CAUTION

When loading paper, take care not to cut your hands with the edges of the paper.

3 Loosen any stiff corners of the envelopes and flatten curls as shown in the figure.

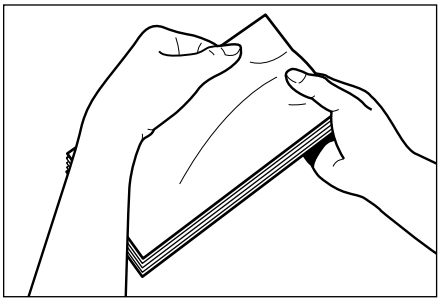

4 Align the edges of the envelopes on a flat surface.

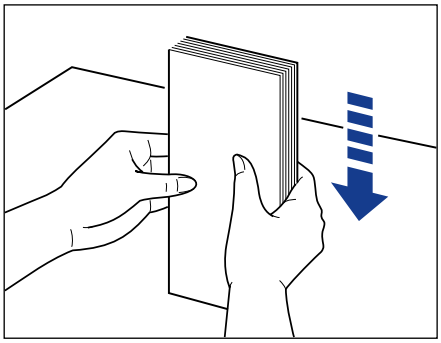

5 Load the envelopes so that the edge of the media is aligned with the front side of the paper cassette.

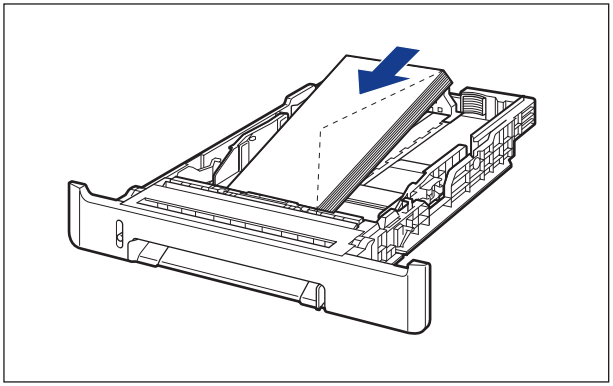

IMPORTANT

- Up to approximately 10 envelopes can be loaded in the paper cassette.
- You cannot print on the reverse side (glued side) of envelopes.

6 While holding the lock release lever of the side paper guides, slide the guides to the mark for the size of the loaded envelopes.

The side paper guides move together.

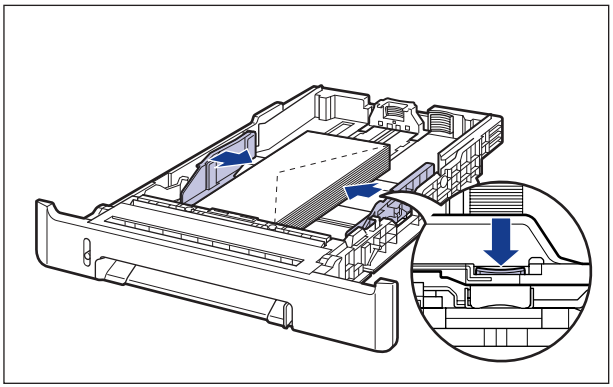

IMPORTANT

Be sure to align the paper guides with the width of the envelopes. If the paper guides are too loose or too tight, this may result in misfeeds or paper jams.

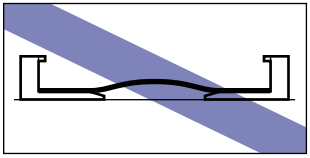

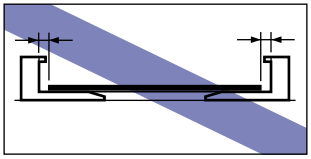

7 While holding the lock release lever of the rear paper guide, slide the guide to the size mark for the loaded envelopes.

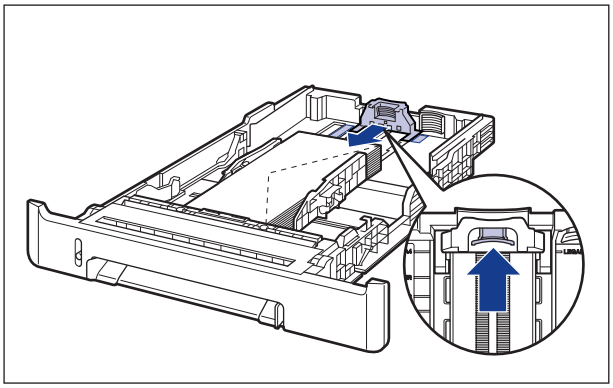

8 Hold down the envelopes as shown in the figure, make sure that the stack does not exceed the load limit marks (A), and then set it under the hooks (B) on the paper guides.

Make sure that there is sufficient space between the hooks of the paper guides and the stack of the envelopes. If there is no sufficient space, slightly reduce the amount of the envelopes.

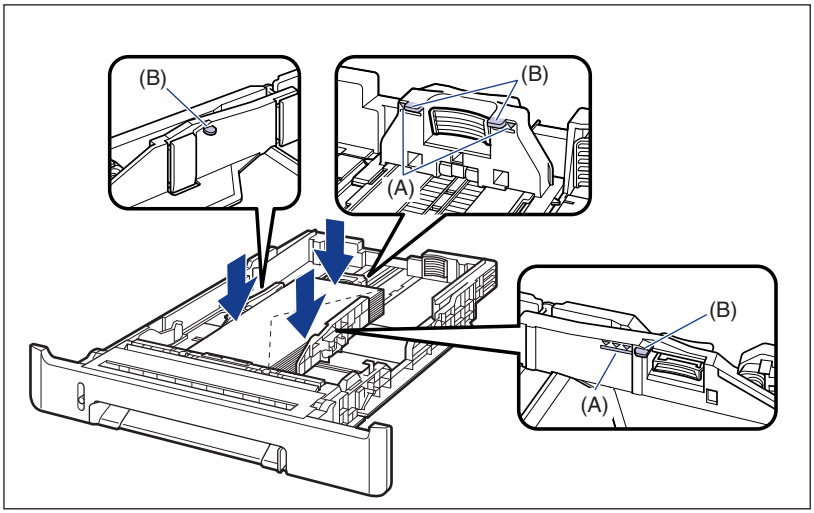

9 Set the paper cassette in the printer.

Push the paper cassette into the printer firmly until the front side of the cassette is flush with the front surface of the printer.

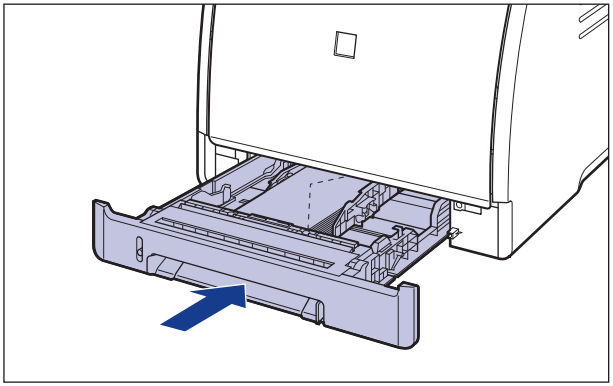

10 Register the size of the loaded paper using the following procedure.

This printer's paper cassette cannot automatically detect the paper size. Therefore, you need to register the size of the loaded paper.

11 Display the Printer Status Window.

For details on methods for displaying the Printer Status Window, see "Displaying the Printer Status Window," on p. 4-88.

12 From the [Options] menu, select [Device Settings] → [Register Paper Size in Cassettes].

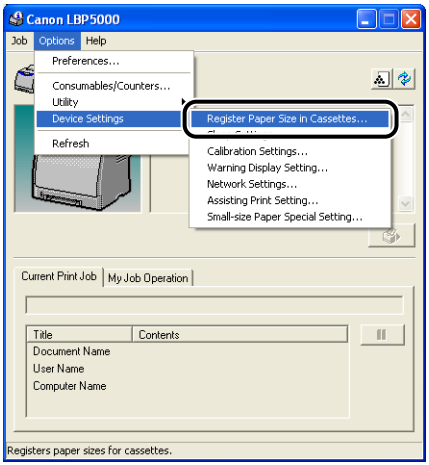

13 Select the size of the paper loaded in the paper cassette, then click [OK].

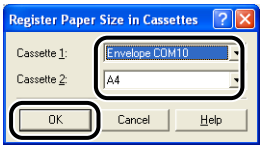

Next, configure the printer driver (See p. 2-59).

Loading an Envelope in the Manual Feed Slot

Load an envelope in the manual feed slot using the following procedure.

- When loading an envelope at sizes of DL, COM10, C5, or Monarch in the manual feed slot, be sure to load it in portrait orientation so that the printing side is facing down and the flap is toward the right of the printer when viewed from the front.
  (⬅: Feeding direction)

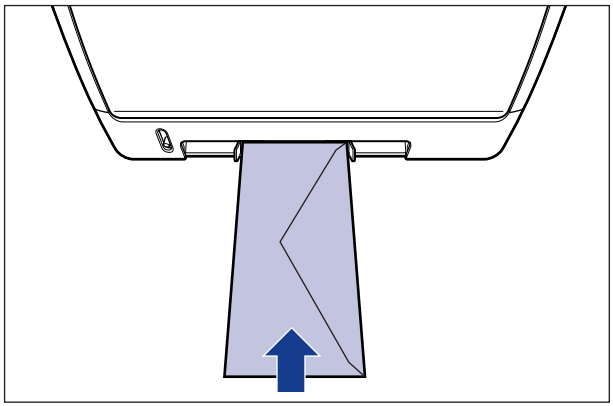

- When printing an envelope of the Envelope B5 size, close the flap and load it so that the printing side is facing down and the envelope is printed from the top (the edge with the flap).
  (⬅: Feeding direction)

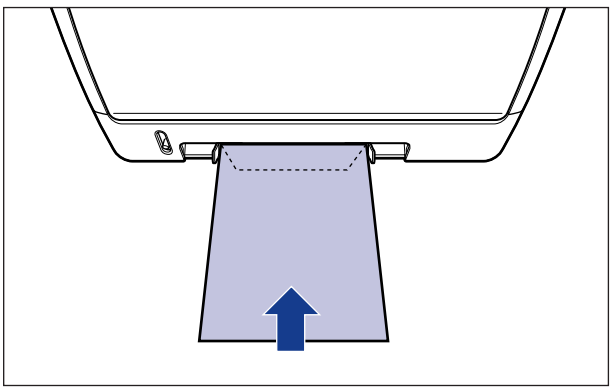

1 Adjust the paper guides to the width of the loaded envelope as shown in the figure.

The paper guides move together.

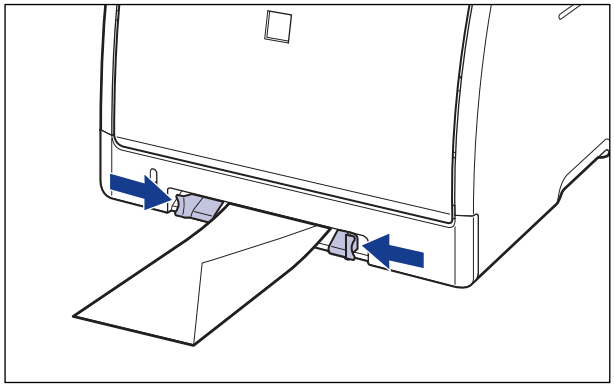

IMPORTANT

Be sure to align the paper guides with the width of the envelopes. If the paper guides are too loose or too tight, this may result in misfeeds or paper jams.

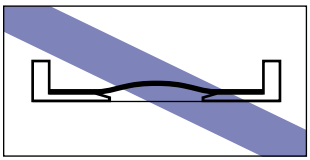

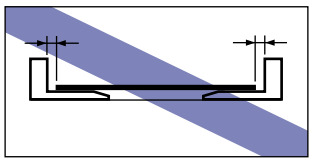

2 Gently insert the envelope until it touches the back of the printer while supporting the envelope with hands as shown in the figure.

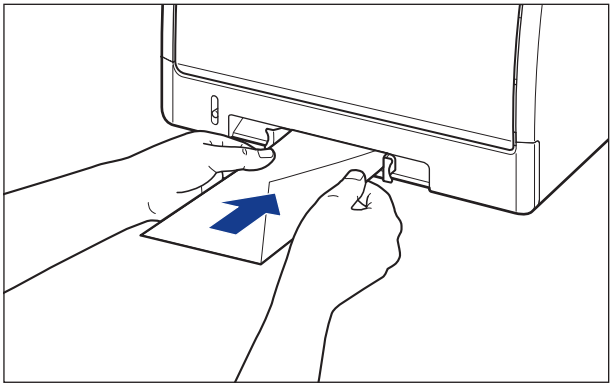

When the envelope is loaded, it is sent into the slot a little.

CAUTION

When loading paper, take care not to cut your hands with the edges of the paper.

IMPORTANT

Load the envelope so that it is straight.

Next, configure the printer driver (See p. 2-59).

Loading Custom Size Paper (Non-Standard Paper) in the Paper Source

This section describes the procedure for loading custom size paper in the paper source.

The paper source that you can load custom size paper is the paper cassette and manual feed slot. If you want to print continuously, load the custom size paper in the paper cassette.
When printing only a sheet of custom size paper that is different in size or type from the one loaded in the paper cassette, load the custom size paper in the manual feed slot.
Custom size paper that is 76.2 mm to 215.9 mm wide and 127.0 mm to 355.6 mm long can be loaded.

IMPORTANT

- For more details on the usable paper, see "Usable Paper," on p. 2-2.
- For details on handling the manual feed slot or paper cassette, see "Precautions for Handling the Manual Feed Slot or Paper Cassette," on p. 2-12.

Loading Custom Size Paper in the Paper Cassette

Load custom size paper in the paper cassette using the following procedure.
Be sure to custom size paper in portrait orientation when loading it in the paper cassette.

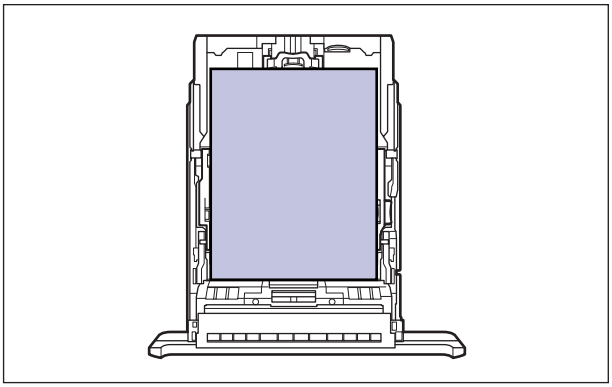

NOTE

Load custom size paper in Cassette 2 (Only when the optional paper feeder is installed) in the same manner as you load custom size paper in Cassette 1.

1 Pull out the paper cassette.

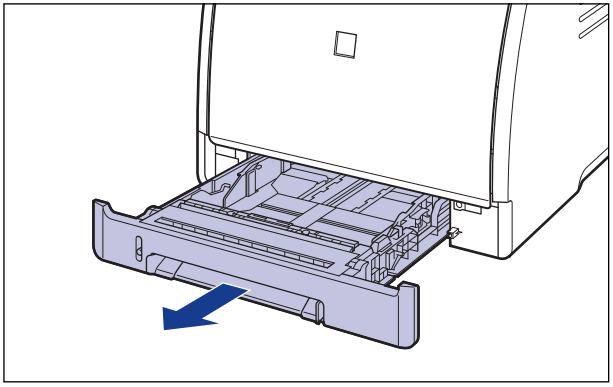

CAUTION

Be sure to take the paper cassette out of the printer before loading paper. If paper is loaded while the paper cassette is partially pulled out, the paper cassette may drop or the printer may become damaged resulting in personal injury.

2 When loading paper that is larger than A4 size (297.0 mm), adjust the length of the paper cassette while holding the lock release lever shown in the figure.

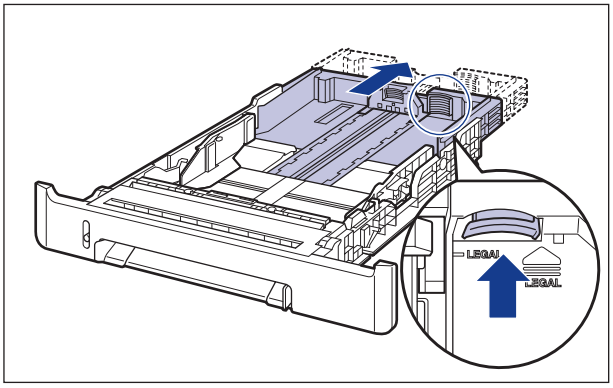

3 Load the paper so that the edge of the paper is aligned with the front side of the paper cassette.

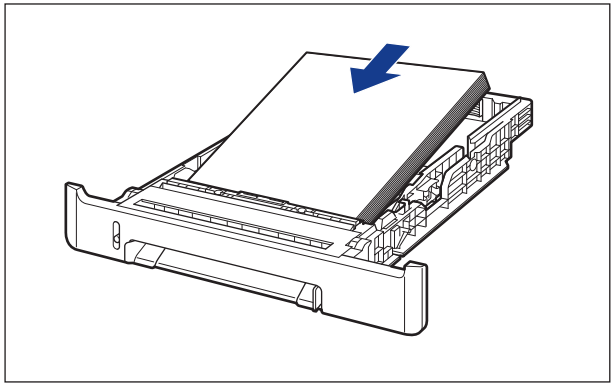

CAUTION

When loading paper, take care not to cut your hands with the edges of the paper.

IMPORTANT

If you use paper that has been poorly cut, multiple sheets of paper may be fed at once. In this case, fan the paper thoroughly, and then align the edges of the stack on a hard, flat surface.

NOTE

To print letterhead paper or paper printed with a logo, load the paper so that the printing side is facing up, as shown in the following figure.
(⬅ : Feeding direction)

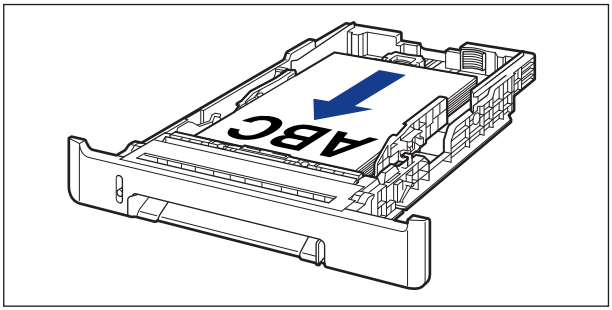

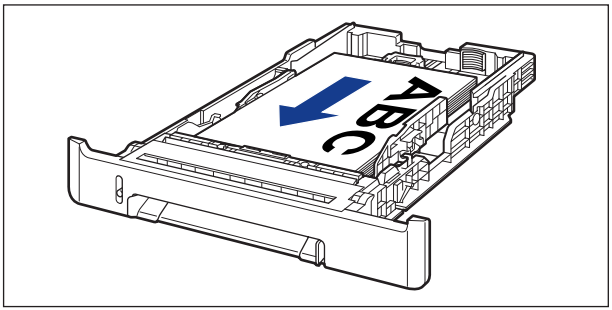

4 While holding the lock release lever of the side paper guides, slide the guides to the mark for the size of the loaded paper.

The side paper guides move together.

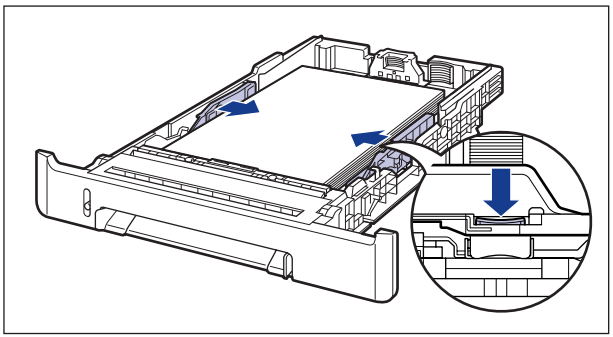

IMPORTANT

Be sure to align the paper guides with the width of the paper. If the paper guides are too loose or too tight, this may result in misfeeds or paper jams.

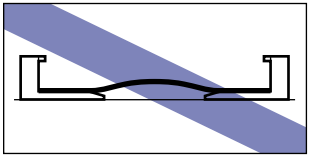

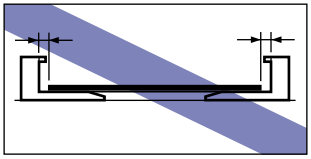

5 While holding the lock release lever of the rear paper guide, slide the guide to the size mark for the loaded paper.

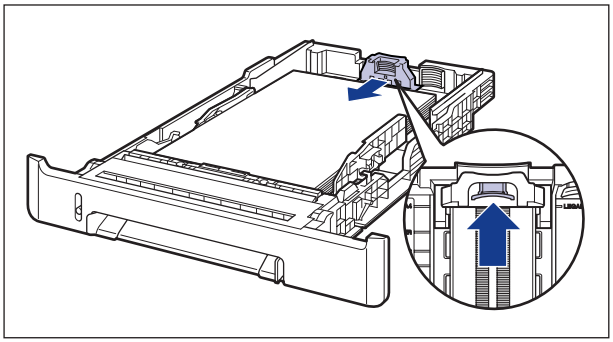

6 Hold down the paper as shown in the figure, make sure that the paper stack does not exceed the load limit marks (A), and then set it under the hooks (B) on the paper guides.

Make sure that there is sufficient space between the hooks of the paper guides and the paper stack. If there is no sufficient space, slightly reduce the amount of paper.

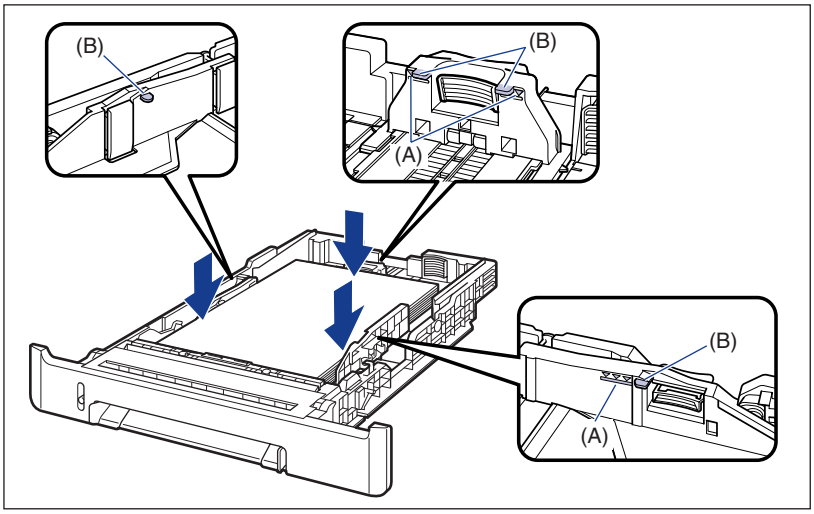

7 Set the paper cassette in the printer.

Push the paper cassette into the printer firmly until the front side of the cassette is flush with the front surface of the printer.

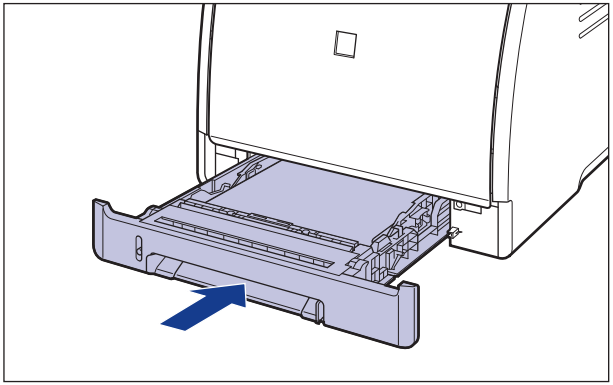

8 Register the size of the loaded paper using the following procedure.

This printer's paper cassette cannot automatically detect the paper size. Therefore, you need to register the size of the loaded paper.

9 Display the Printer Status Window.

For details on methods for displaying the Printer Status Window, see "Displaying the Printer Status Window," on p. 4-88.

10 From the [Options] menu, select [Device Settings] → [Register Paper Size in Cassettes].

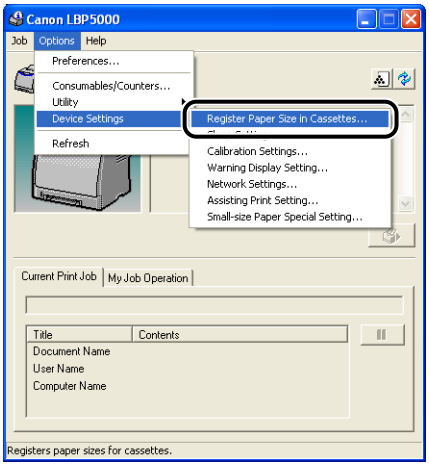

11 Select [Custom], then click [OK].

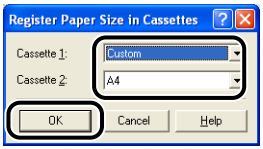

Next, register the custom paper size (See p. 2-56).

Loading Custom Size Paper in the Manual Feed Slot

Load custom size paper in the manual feed slot using the following procedure. Be sure to load custom size paper in portrait orientation when loading it in the manual feed slot.

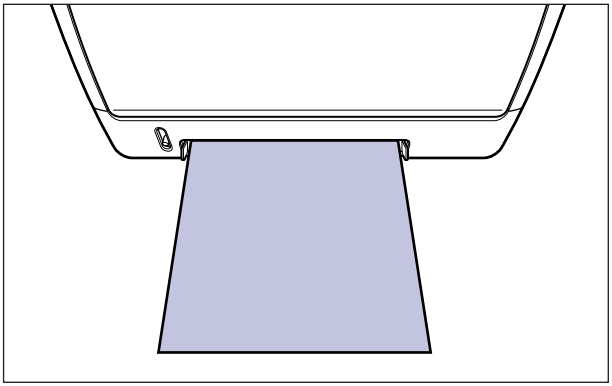

1 **Adjust the paper guides to the width of the loaded paper as shown in the figure.**

The paper guides move together.

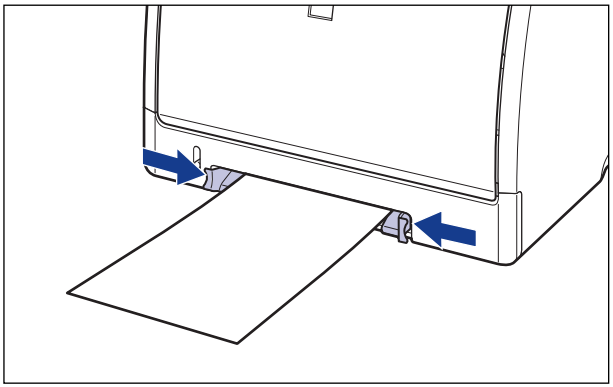

IMPORTANT

Be sure to align the paper guides with the width of the paper. If the paper guides are too loose or too tight, this may result in misfeeds or paper jams.

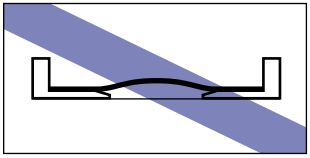

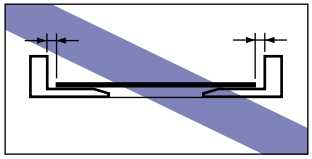

NOTE

To print letterhead paper or paper printed with a logo, load the paper so that the printing side is facing down, as shown in the following figure.
(⬅ : Feeding direction)

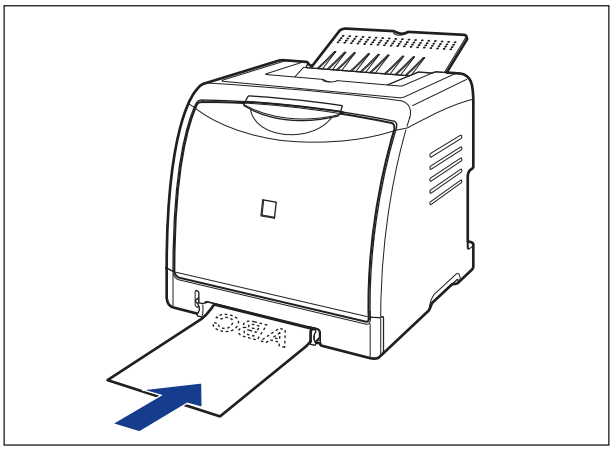

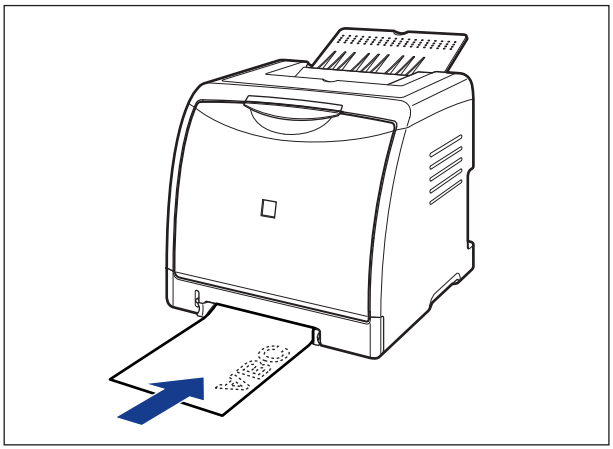

2 **Gently insert the paper until it touches the back of the printer while supporting the paper with hands as shown in the figure.**

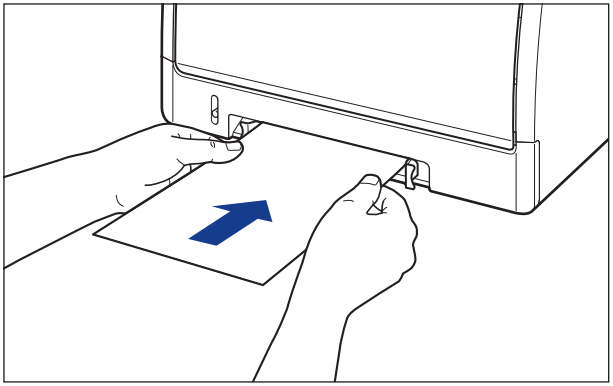

When the paper is loaded, it is sent into the slot a little.

CAUTION

When loading paper, take care not to cut your hands with the edges of the paper.

IMPORTANT

- Load the paper so that it is straight.
- If the paper is curled or folded at corners, flatten it before loading it in the printer.

Next, register the custom paper size (See p. 2-56).

Registering a Custom Paper Size (Non-Standard Paper)

When printing custom size paper, you need to register the custom paper size in the printer driver previously using the following procedure.

NOTE

To specify a custom paper size, display the following dialog box.

- For Windows 2000/XP/Server 2003
  Display the [Document Properties] dialog box from the [Printers] folder (the [Printers and Faxes] folder for Windows XP/Server 2003).
- For Windows 98/Me
  Display the [Printer Properties] dialog box from the [Printers] folder.

1 Display the [Page Setup] sheet, then click [Custom Paper Size].

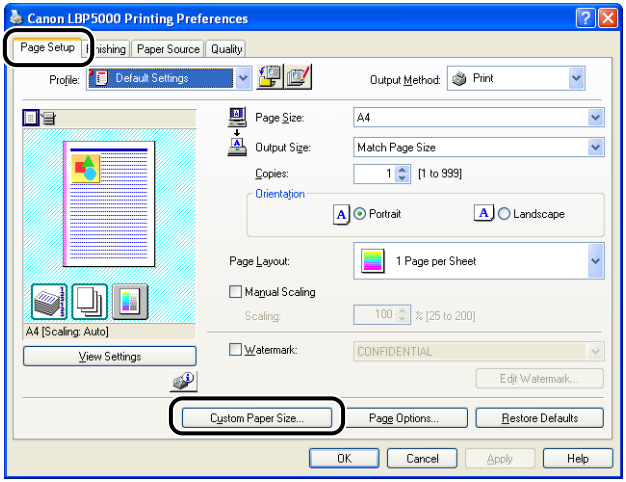

2 Specify the following options as needed.

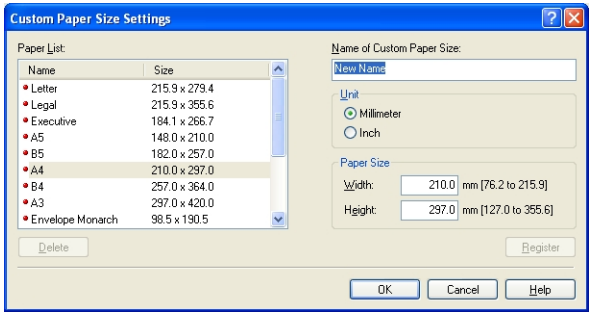

[Paper List]:	Displays [Name] and [Size] of standard paper sizes and added custom paper sizes.
[Name of Custom Paper Size]:	You can enter the name of the custom paper size to be added. Up to 31 characters can be entered.
[Unit]:	Specify the unit ([Millimeter] or [Inch]) to be used when setting the custom paper size.
[Paper Size]:	Specify the height and width of the custom paper size ([Height] ≧ [Width]). Specify the custom paper size in portrait orientation ([Height] ≧ [Width]) within user-definable sizes.

3 Click [Register].

NOTE

On Windows 98/Me, up to 30 custom paper sizes can be added. On Windows 2000/XP/Server 2003, the number depends on the system environment.

4 Confirm the settings, then click [OK].

Next, configure the printer driver (See p. 2-59).

Setting Up the Printer Driver and Printing

After loading paper in the paper source, configure the printer driver using the following procedure before printing.

NOTE

For more details on the settings for the printer driver, see Online Help. For details on methods for displaying Online Help, see "How to Use Online Help," on p. 4-76.

1 **Select [Print] from the [File] menu in the application. Select the name of this printer for [Name] or [Printer Name], and then click [Properties].**

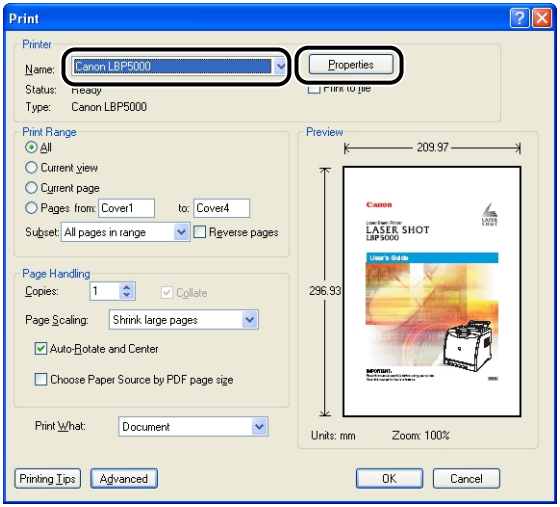

2 Display the [Page Setup] sheet, then from [Page Size], select the size of a document that you have created with the application.

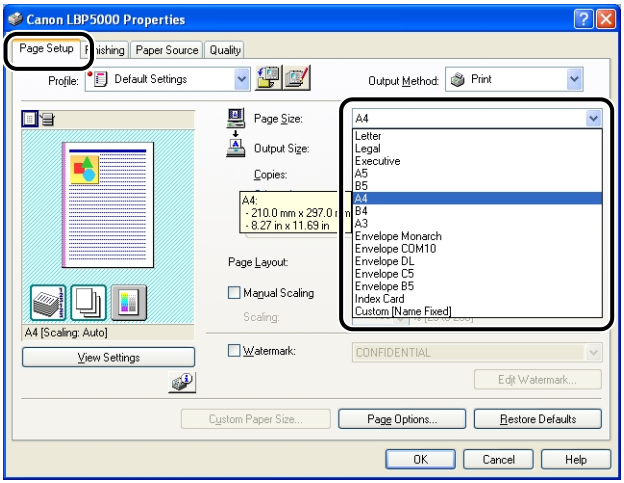

NOTE

If you set [Page Size] to [Envelope DL], [Envelope COM10], [Envelope C5], [Envelope Monarch], or [Envelope B5], the following message appears, and [Paper Type] is automatically specified.

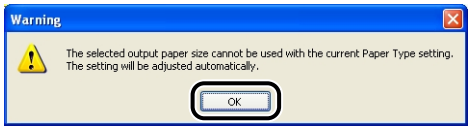

3 From [Output Size], select the size of the loaded paper as needed.

Leave the setting at [Match Page Size] when the paper size specified for [Page Size] and that of the paper loaded in the paper cassette are the same, since there is no need to change the setting.

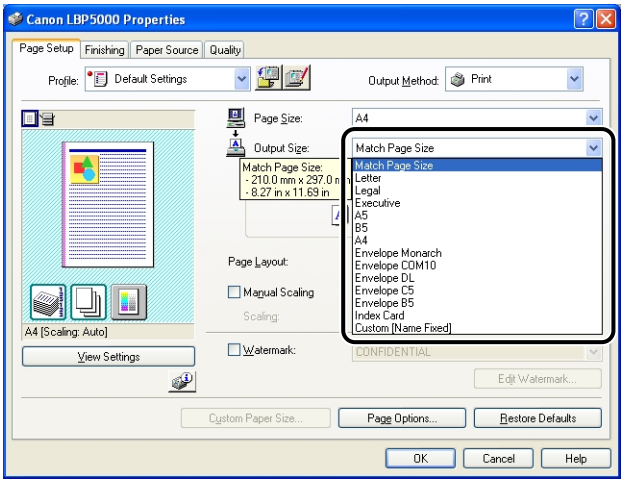

IMPORTANT

The print will be automatically reduced or enlarged to fit on the page when the settings for [Page Size] and [Output Size] are different.

4 Display the [Paper Source] sheet, then select [Paper Source].

Specify the same setting as the one for [Paper Source], although the setting for [Paper Source] changes to ones such as [First Page] or [Other Pages] when [Paper Selection] is set to other than [Same Paper for All Pages].

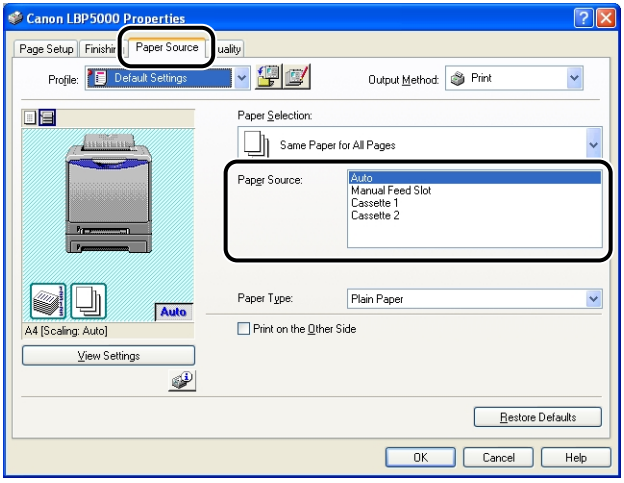

NOTE

When printing paper other than plain paper from the paper cassette, select [Cassette 1] or [Cassette 2] in [Paper Source]. When [Auto] is selected, paper cannot be fed from the paper cassette.

5 Select the paper type specified in [Paper Type].

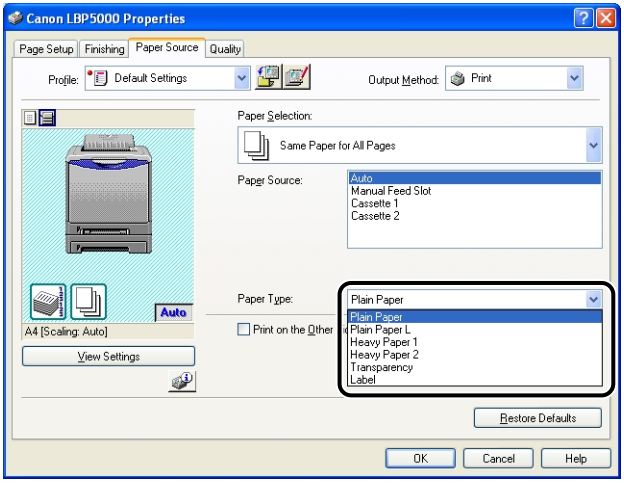

NOTE

Load paper based on the following [Paper Type] criteria:

Paper Type		Printer Driver Setting
Plain paper	60 - 74 g/m^2	[Plain Paper L]
	75 - 90 g/m^2	[Plain Paper]
Heavy paper	91 - 120 g/m^2	[Heavy Paper 1]
	121 - 163 g/m^2	[Heavy Paper 2]
Transparencies		[Transparency]
Labels		[Label]
Envelopes		*

* When printing envelopes, the printer automatically applies the appropriate print mode to the envelope type by specifying [Output Size] in the [Page Setup] sheet.

6 Click [OK] to close the Properties dialog box.

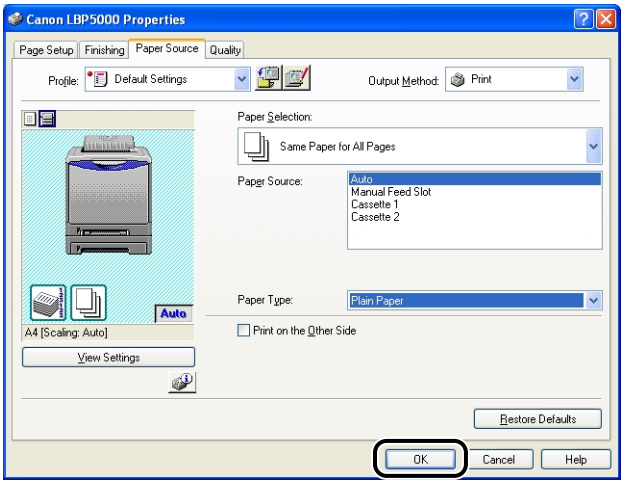

7 Click [OK] to start printing.

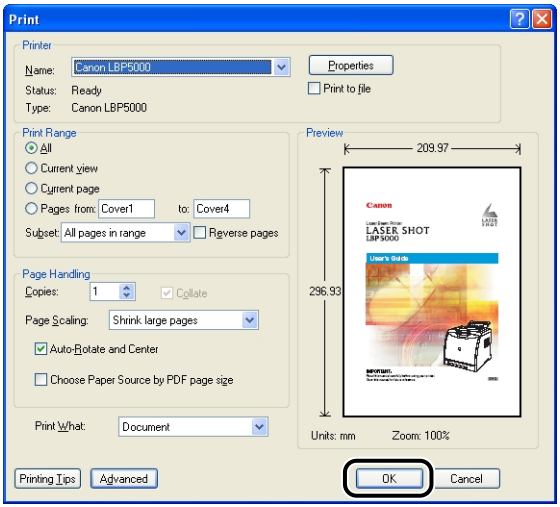

Setting Up the Printing Environment 3

CHAPTER

This chapter describes the procedure for installing the printer driver in a computer and specifying the settings for printing from a network computer by sharing the printer on the network.

Introduction 3-2
- After Installing the Printer 3-2
- Tasks to Perform Each Time You Print 3-2
- System Requirements 3-2

Installing the CAPT Software 3-4
- Installing from CD-ROM Setup 3-5
- Installing with Plug and Play 3-13
- Installing from [Add Printer Wizard] 3-32

After Completing Installation 3-49

Checking the Operations by Configuration Page Print 3-51

Printing from a Network Computer by Sharing the Printer on a Network 3-54
- Print Server Settings 3-55
- Installation on Clients 3-62

Uninstalling the CAPT Software 3-75

Introduction

After Installing the Printer

The following shows the tasks that should be performed after installing the printer:

■ Installing the printer driver

The printer driver is software required for printing from an application you use. Specify the print settings in the printer driver. The procedure for installing the printer driver varies depending on the system environment.

- When printing with the printer and computer connected with the USB cable (See p. 3-4)
- When printing with the optional network board installed, and the printer and the computer connected by LAN (See Network Guide)

■ Sharing the printer on a network (See p. 3-54)

If you share this printer on a network and use it from a computer on the network, you must specify the settings for the computer and install the printer driver on the client computers.

Tasks to Perform Each Time You Print

The following shows the tasks that should be performed each time you print:

■ Specifying printing preferences

Specify the paper size, document size, and print copies in the printer driver. If you do not specify these printing preferences properly, you may not be able to obtain expected printout results.

■ Performing printing

Select the print menu from the application. This procedure varies depending on the application you are using. See the instruction manual supplied with the application.

System Requirements

The following system environment is required to use the printer driver:

■ Operating system software

- Microsoft Windows 98
- Microsoft Windows Me
- Microsoft Windows 2000 Server/Professional

- Microsoft Windows XP Professional/Home Edition*
- Microsoft Windows Server 2003*
  *32-bit processor version only

- System Requirements (minimum required)

	Windows 98/Me	Windows 2000/XP/Server 2003
CPU	Pentium II 300 MHz or more	Pentium II 300 MHz or more
Memory (RAM)*1	64 MB or more	128 MB or more
Hard Disk*2	120 MB or more	120 MB or more

(PC/AT Compatibles)

*1 As the amount of available memory varies depending on the system configuration of the computer or application you are using, the above environment does not guarantee printing in all cases.

*2 This indicates free hard disk space required for installing the printer driver and manuals using Easy Installation. Required free hard disk space varies depending on the system environment or installation method.

- System Requirements (recommended)

	Windows 98/Me	Windows 2000/XP/Server 2003
CPU	Pentium III 800 MHz or more	Pentium III 800 MHz or more
Memory (RAM)	128 MB or more	256 MB or more

■ Interface

When connecting with USB

- Windows 98/Me: USB Full-Speed (USB1.1 equivalent)
- Windows 2000/XP/Server 2003: USB 2.0 Hi-Speed/USB Full-Speed (USB1.1 equivalent)

When connecting to a network (Requires the optional network board.)

- Connector: 10BASE-T or 100BASE-TX
- Protocol: TCP/IP

NOTE

- When using Sound, a PC synthesizer (and the driver for PCM synthesizer) must be installed in your computer. Do not use a PC Speaker driver (speaker.drv etc.).
- This printer uses bi-directional communication. Operation of the printer when connected via unidirectional communication equipment has not been tested, and as a result, Canon cannot guarantee printer operation when the printer is connected using unidirectional print servers, USB hubs or switching devices.

Installing the CAPT Software

This section describes the procedure for installing the CAPT software when connecting this printer to your computer with a USB cable.

There are the following methods for installing the printer driver:

Installation method	Contents	Reference page
Easy Installation	Installs the manuals when installing the printer driver from the CD-ROM supplied with the printer (CD-ROM Setup).	p. 3-5
Custom Installation	You can choose to install only the printer driver or only the manuals from the CD-ROM supplied with the printer (CD-ROM Setup).*1	p. 3-5
Installing with Plug and Play	Searches for the printer automatically, selects the file required for the installation from the CD-ROM supplied with the printer, and then installs the printer driver.	Windows 98/Me: p. 3-13
		Windows 2000: p. 3-22
		Windows XP/Server 2003: p. 3-27
Installing from [Add Printer Wizard]*2	Using [Add Printer Wizard], selects the file required for the installation from the CD-ROM supplied with the printer, and then installs the printer driver.	Windows 98/Me: p. 3-32
		Windows 2000: p. 3-36
		Windows XP/Server 2003: p. 3-42

*1 If you want to install the manuals only, see "Installing the Manuals," on p. 4-82.

*2 When installing the CAPT software from [Add Printer Wizard], the USB port for connecting this printer has to have already been registered.

IMPORTANT

- The CAPT software is required for printing with this printer. Be sure to install the CAPT software.
- When there is not enough free hard disk space, a message will appear during the installation. Stop the installation and increase the free space, and then install the CAPT software again.

NOTE

- For details on the procedure for installing the software when installing the optional network board and connecting the printer to the computer with LAN, see "Network Guide".
- For details on the procedure for installing the software when sharing this printer on a network and printing from a computer on the network, see "Printing from a Network Computer by Sharing the Printer on a Network," on p. 3-54.
- A USB cable is only supplied with 220 - 240 V model for countries and regions of Asia. In other countries and regions, prepare according to the specifications of your computer. Use a USB cable with the following symbol.

Installing from CD-ROM Setup

The screen shots used in this section are from Windows XP.

IMPORTANT

If you are using Windows 2000/XP/Server 2003, be sure to log on as a member of Administrators when starting up.

1 **Make sure that the printer and computer are OFF.**

2 **Connect the B-type (square) end of the USB cable to the USB connector on the printer.**

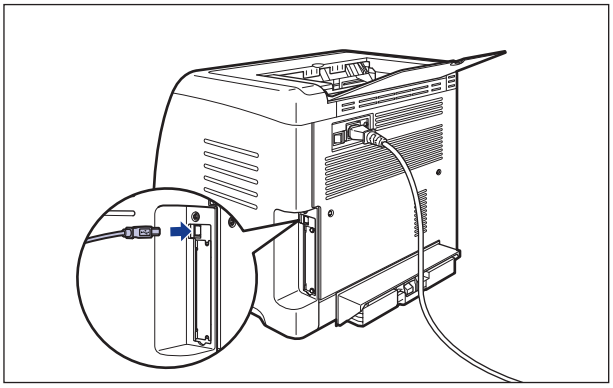

3 Connect the A-type (flat) end of the USB cable to the USB port on the computer.

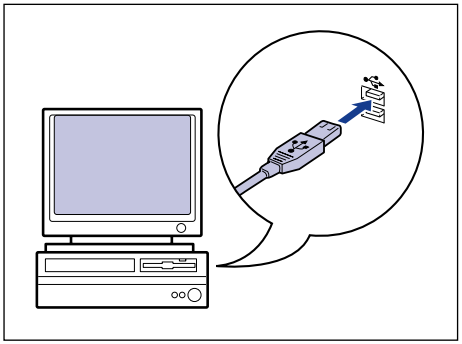

4 Turn the computer on and start up Windows.

IMPORTANT

If a Wizard appears by the Plug and Play automatic setup, click [Cancel], and then install the CAPT software using this procedure.

5 Insert the supplied "LBP5000 User Software" CD-ROM into the CD-ROM drive.

If the CD-ROM is already in the drive, eject the disk and re-insert it into the drive.

IMPORTANT

If CD-ROM Setup does not appear, select [Run] from the [Start] menu, enter "D:\English\MInst.exe", and then click [OK]. (The CD-ROM drive name is indicated as "D:" in this manual. The CD-ROM drive name may differ depending on the computer you are using.)

6 Click [Easy Installation] or [Custom Installation].

[Easy Installation] allows you to install the printer driver and the instruction manuals simultaneously. If you do not install the manuals, select [Custom Installation].

7 Click [Install].

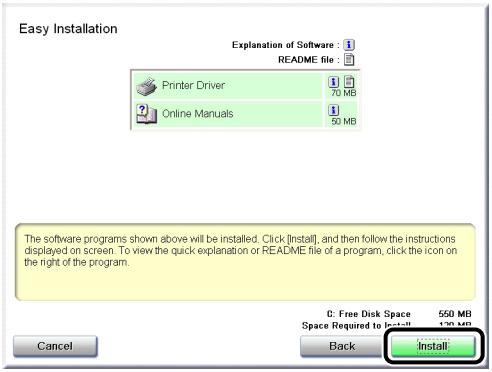

If you selected [Custom Installation] in Step 6, clear the [Online Manuals] check box, and then click [Install].

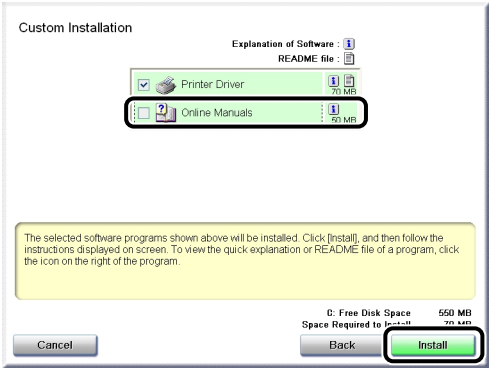

8 Click [Next].

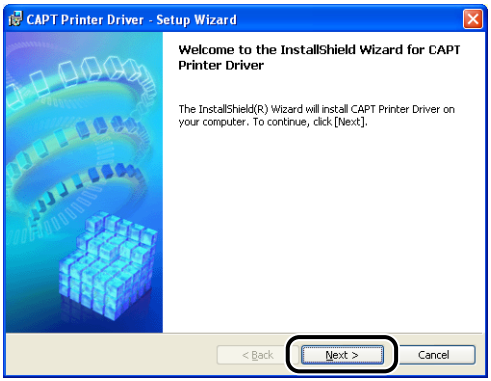

9 Confirm the contents and select [I accept the terms in the license agreement], and then click [Next].

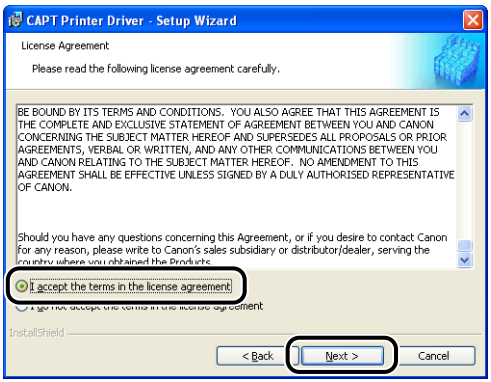

10 Select [Manually Set Port to Install], then click [Next].

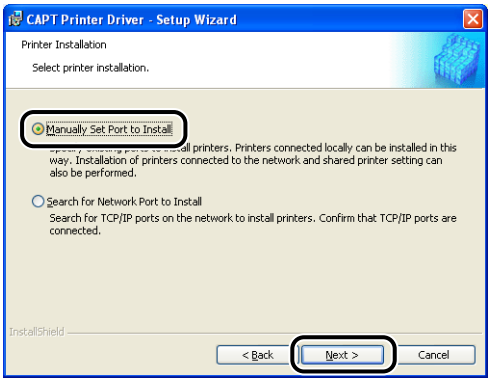

11 Select the [Install Printer Driver through a USB Connection] check box, then click [Next].

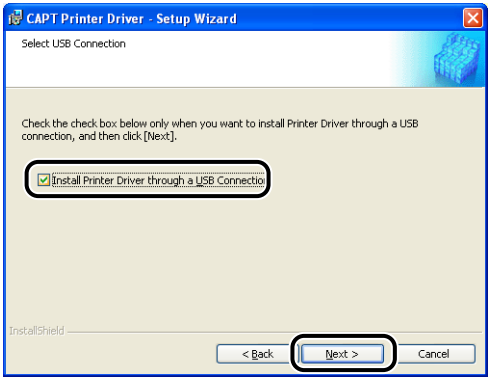

Depending on the system environment, a message that prompts you to restart the computer may appear. In this case, restart the computer and continue the installation.

If you are using Windows XP Service Pack 2 or another operating system equipped with Windows Firewall, the following screen is displayed. Specify whether to configure Windows Firewall to unblock communication with the client computers when sharing the printer on a network.
Click [Yes] when you share the printer on a network.
Click [No] when you do not share the printer on a network.

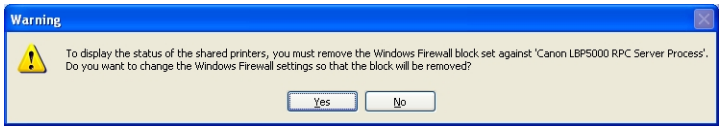

NOTE

Even after the installation, you can change the Firewall settings using "CAPT Windows Firewall Utility" in the supplied CD-ROM. For more details, see "Windows Firewall," on p. 8-15.

12 The message <Installation cannot be stopped once it starts. Do you want to continue?> appears. Click [Yes].

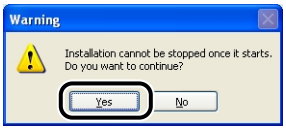

NOTE

- If you are using Windows 2000 and the [Digital Signature Not Found] dialog box appears, click [Yes].
- If you are using Windows XP/Server 2003 and the [Hardware Installation] dialog box appears, click [Continue Anyway].

13 When the following screen is displayed, turn the printer ON.

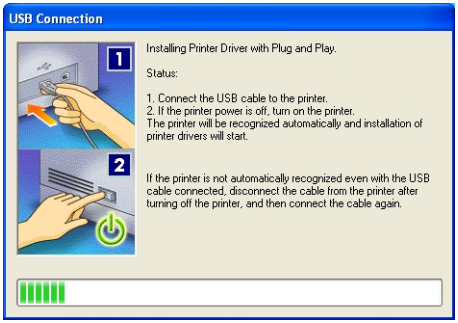

Press "I" of the power switch to turn the printer ON.

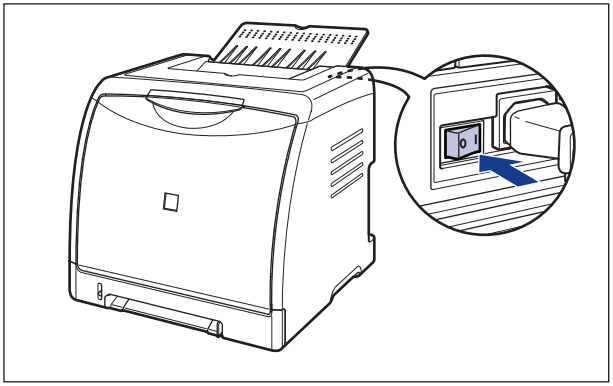

Installation of the USB class driver and the printer driver starts automatically.

NOTE

- If the printer is not recognized automatically even after the USB cable is connected, see "Installation Problems," on p. 7-29.
- If you are using Windows XP/Server 2003 and the [Hardware Installation] dialog box appears, click [Continue Anyway].

14 The screen that informs you of the completion of the printer driver installation is displayed. Click [Exit].

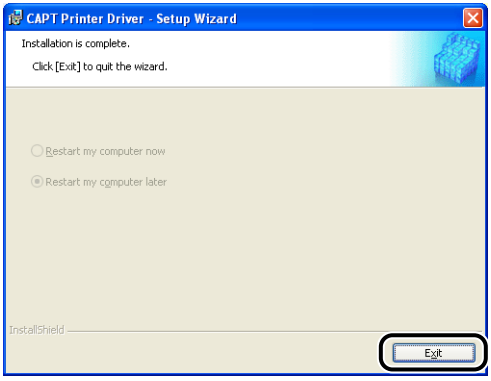

15 If [Easy Installation] is selected in Step 6, the manuals are installed.

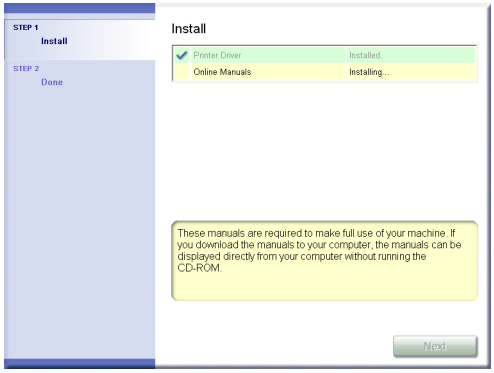

16 Confirm the installation results, then click [Next].

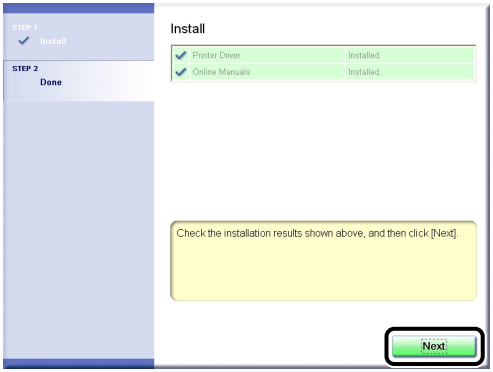

NOTE

If the printer driver is not installed properly, see "Installation Problems," on p. 7-29.

17 Select the [Restart Computer Now (Recommended)] check box, then click [Restart].

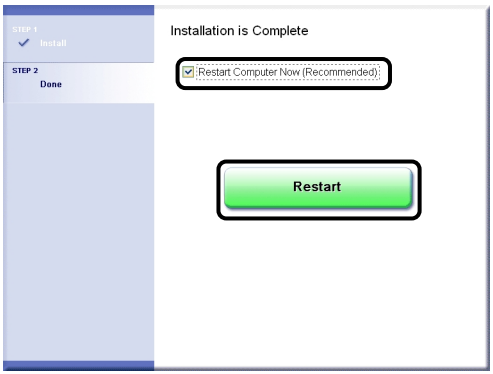

Windows restarts.

The installation of the USB class driver and the printer driver is completed.

Installing with Plug and Play

For Windows 98/Me

The screen shots used in this section are from Windows Me.

1 **Make sure that the printer and computer are OFF.**

2 **Connect the B-type (square) end of the USB cable to the USB connector on the printer.**

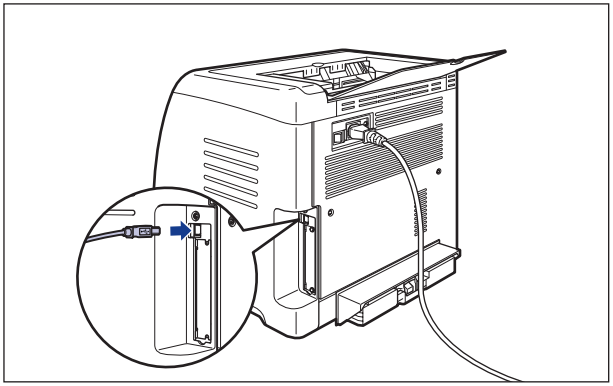

3 **Connect the A-type (flat) end of the USB cable to the USB port on the computer.**

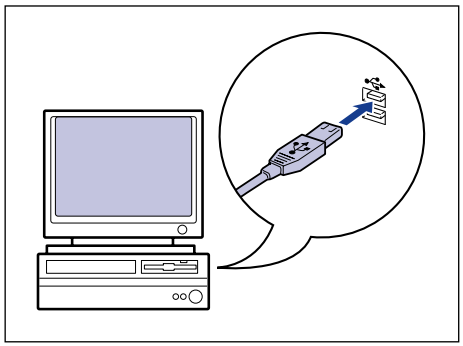

4 Press "|" of the power switch to turn the printer ON.

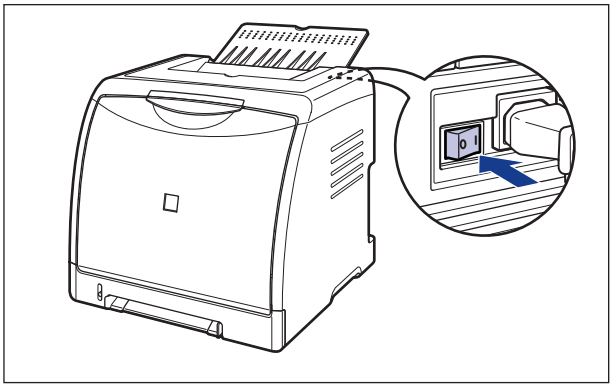

5 Turn the computer on and start up Windows 98/Me.

The [Add New Hardware Wizard] dialog box appears.

● For Windows Me

If the following dialog box appears, proceed to Step 6.

If the following dialog box appears, proceed to Step 13.

● **For Windows 98**

If the following dialog box appears, click [Next], then proceed to Step 6.

If the following dialog box appears, click [Next], then proceed to Step 13.

6 Select [Specify the location of the driver (Advanced)], then click [Next].

For Windows 98: Select [Search for the best driver for your device. (Recommended).], then click [Next].

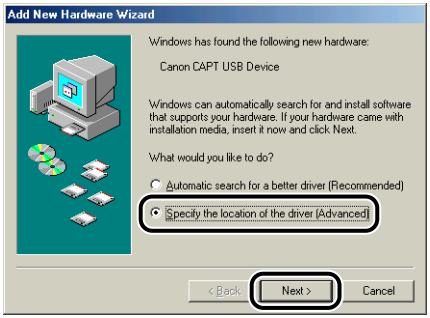

7 Insert the supplied "LBP5000 User Software" CD-ROM into the CD-ROM drive.

If CD-ROM Setup appears, click [Exit].

8 Select [Search for the best driver for your device. (Recommended).], clear the [Removable Media (Floppy, CD-ROM...)] check box, and then select the [Specify a location] check box.

For Windows 98: Clear the [Floppy disk drives] check box and the [CD-ROM drives] check box, and then select the [Specify a location] check box.

9 Click [Browse], then select the folder.

For Windows Me: Select [D:\English\USBPORT\WinMe], and then click [OK].
For Windows 98: Select [D:\English\USBPORT\Win98], and then click [OK].
The CD-ROM drive name is indicated as "D:" in this manual. The CD-ROM drive name may differ depending on the computer you are using.

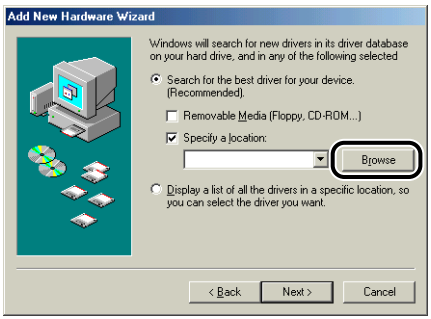

10 Make sure that the folder to be browsed is displayed for [Specify a location], and then click [Next].

11 Click [Next].

Installation of the USB class driver starts.

12 Click [Finish].

The printer is detected automatically. Please wait a moment.
The [Add New Hardware Wizard] dialog box appears. For Windows 98, click [Next].

13 Select [Specify the location of the driver (Advanced)], then click [Next].

For Windows 98: Select [Search for the best driver for your device. (Recommended).], then click [Next].

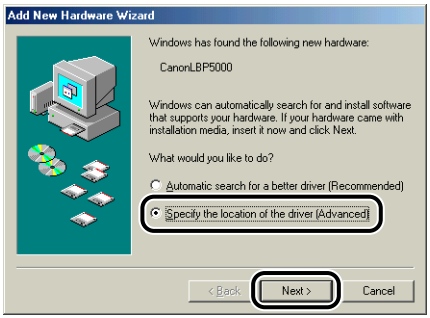

14 If the supplied "LBP5000 User Software" CD-ROM is not in the CD-ROM drive, insert the "LBP5000 User Software" CD-ROM into the CD-ROM drive.

If CD-ROM Setup appears, click [Exit].

15 Select [Search for the best driver for your device. (Recommended).], clear the [Removable Media (Floppy, CD-ROM...)] check box, and then select the [Specify a location] check box.

For Windows 98: Clear the [Floppy disk drives] check box and the [CD-ROM drives] check box, and then select the [Specify a location] check box.

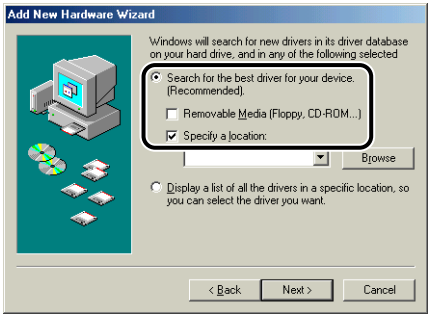

16 Click [Browse], then select the folder.

Select [D:\English\Win98_Me], then click [OK].
The CD-ROM drive name is indicated as "D:" in this manual. The CD-ROM drive name may differ depending on the computer you are using.

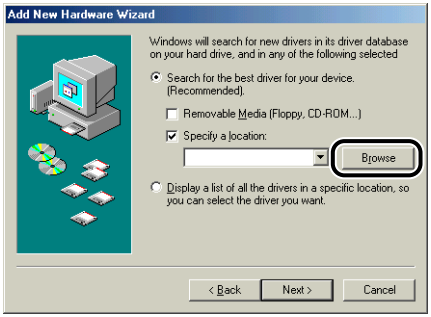

17 Make sure that the folder to be browsed is displayed for [Specify a location], and then click [Next].

18 Click [Next].

19 Enter a new name in [Printer name] if you want to change the printer name.

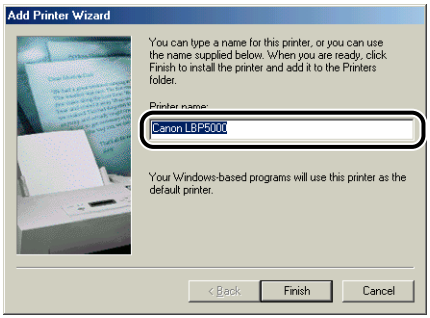

NOTE

If another printer driver has already been installed in the computer, the message <Do you want your Windows-based programs to use this printer as the default printer?> appears. In this case, select [Yes] or [No].

20 Click [Finish].

Copying files is started.

21 When the dialog box for completing the installation appears, click [OK].

22 Click [Finish].

The installation of the USB class driver and the printer driver is completed.

For Windows 2000

1 **Make sure that the printer and computer are OFF.**

2 **Connect the B-type (square) end of the USB cable to the USB connector on the printer.**

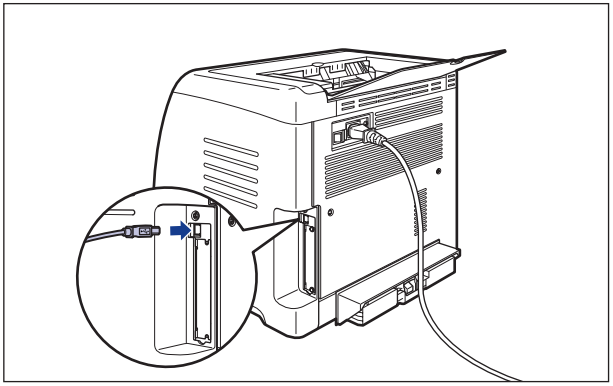

3 **Connect the A-type (flat) end of the USB cable to the USB port on the computer.**

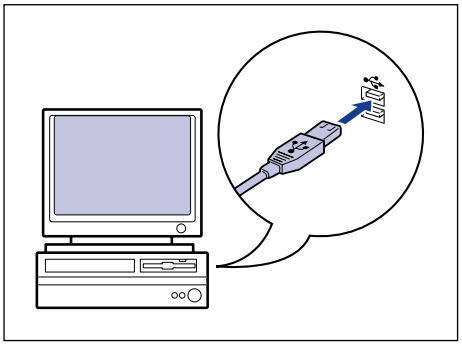

4 Press "|" of the power switch to turn the printer ON.

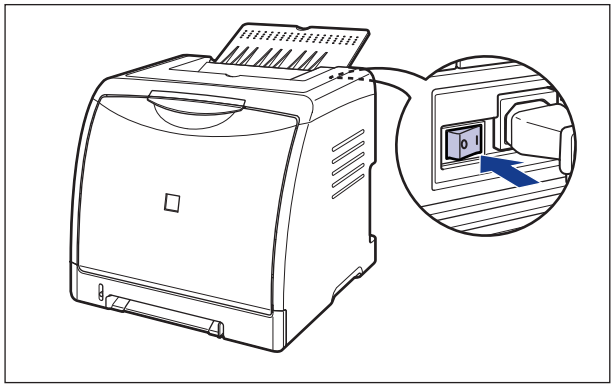

5 Turn the computer on and start up Windows 2000.

6 Log on as a member of Administrators.

The [Found New Hardware Wizard] dialog box appears.

NOTE

Full Control Permission is required for the installation of the printer driver.

7 Click [Next].

8 Select [Search for a suitable driver for my device (recommended)], then click [Next].

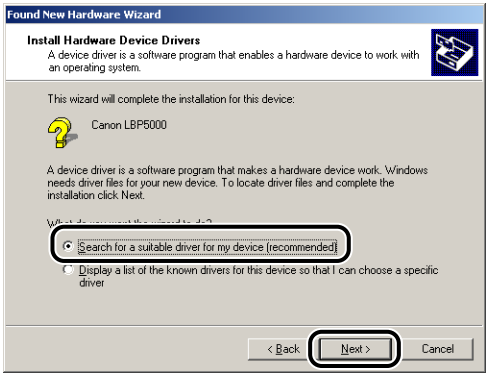

NOTE

[Unknown] may be displayed as the name of the device.

9 Clear the [Floppy disk drives] check box and the [CD-ROM drives] check box, select the [Specify a location] check box, and then click [Next].

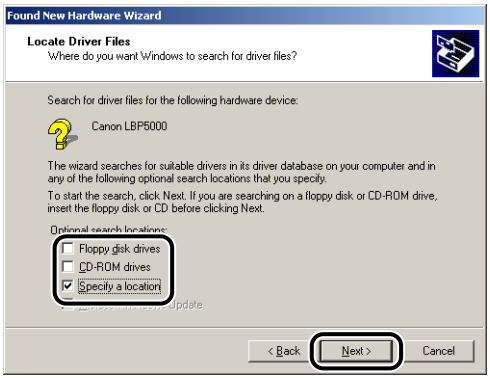

10 Insert the supplied "LBP5000 User Software" CD-ROM into the CD-ROM drive, and then click [Browse].

If CD-ROM Setup appears, click [Exit].

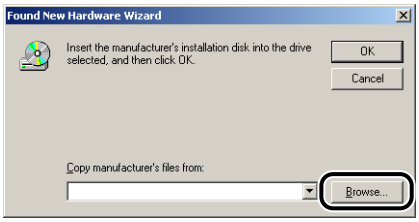

11 Select [D:\English\Win2K_XP]. Select [CNAC4STK.INF], then click [Open].

The CD-ROM drive name is indicated as "D:" in this manual. The CD-ROM drive name may differ depending on the computer you are using.

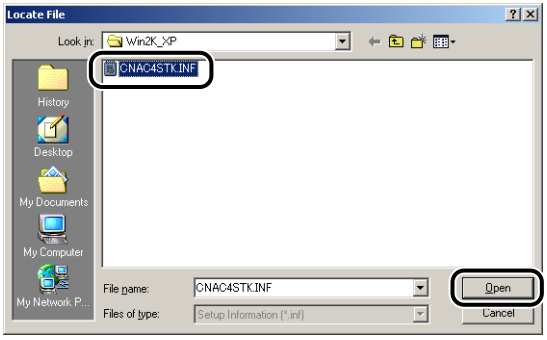

12 Make sure that the folder to be browsed is displayed for [Copy manufacturer's files from], and then click [OK].

13 Click [Next].

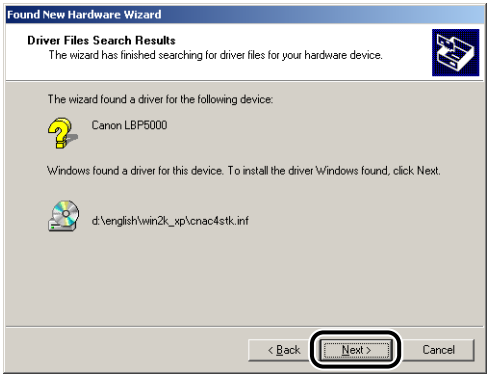

Copying files is started.

NOTE

If the [Digital Signature Not Found] dialog box appears, click [Yes].

14 Click [Finish].

The installation of the USB class driver (supplied with an operating system) and the printer driver is completed.

For Windows XP/Server 2003

The screen shots used in this section are from Windows XP.

1 **Make sure that the printer and computer are OFF.**

2 **Connect the B-type (square) end of the USB cable to the USB connector on the printer.**

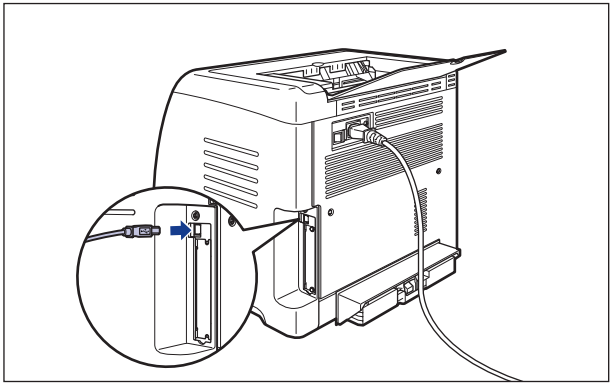

3 **Connect the A-type (flat) end of the USB cable to the USB port on the computer.**

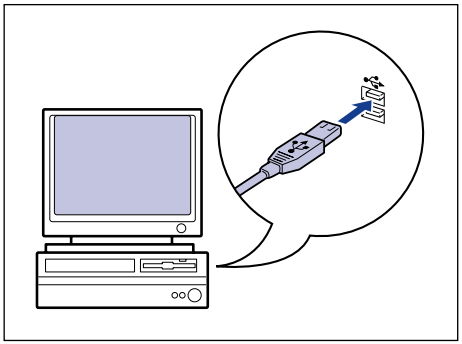

4 Press "|" of the power switch to turn the printer ON.

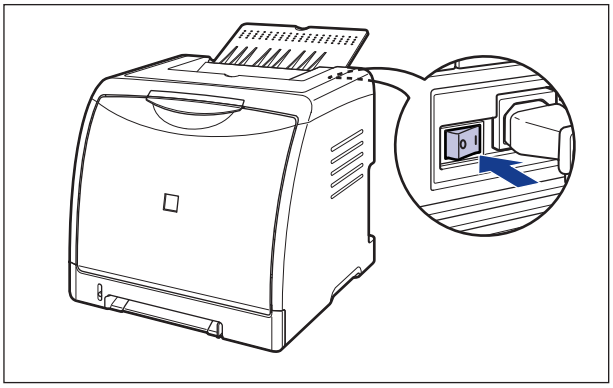

5 Turn the computer on and start up Windows XP/Server 2003.

6 Log on as a member of Administrators.

NOTE

Full Control Permission is required for the installation of the printer driver.

7 Insert the supplied "LBP5000 User Software" CD-ROM into the CD-ROM drive.

If CD-ROM Setup appears, click [Exit].

- **If the following screen is displayed**

❑ Select [Install from a list or specific location (Advanced)], then click [Next].

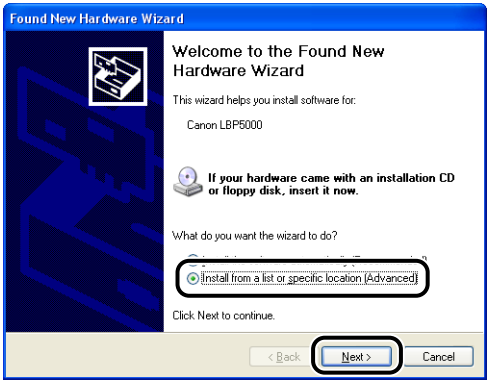

● If the following screen is displayed

❑ Select [No, not this time], then click [Next].

❑ Select [Install from a list or specific location (Advanced)], then click [Next].

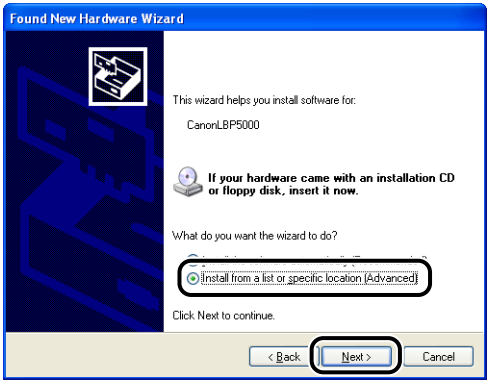

8 Select [Search for the best driver in these locations.], clear the [Search removable media (floppy, CD-ROM...)] check box, and then select the [Include this location in the search] check box.

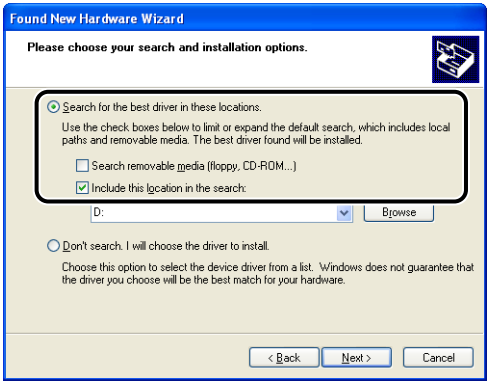

9 Click [Browse], then select the folder.

Select [D:\English\Win2K_XP], then click [OK].
The CD-ROM drive name is indicated as "D:" in this manual. The CD-ROM drive name may differ depending on the computer you are using.

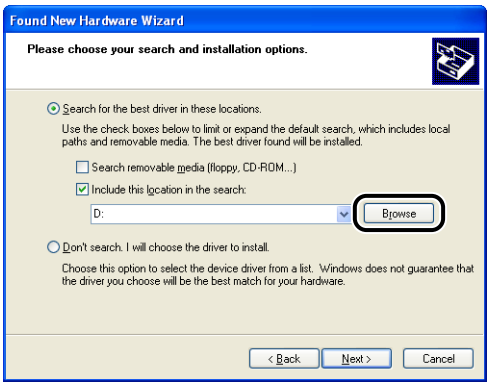

10 Make sure that the folder to be browsed is displayed for [Include this location in the search], and then click [Next].

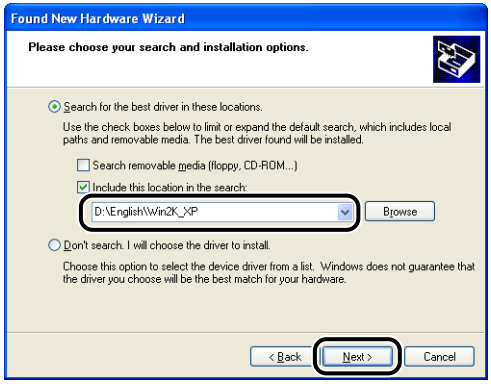

The installation process is displayed.

NOTE

If the [Hardware Installation] dialog box appears, click [Continue Anyway].

11 Click [Finish].

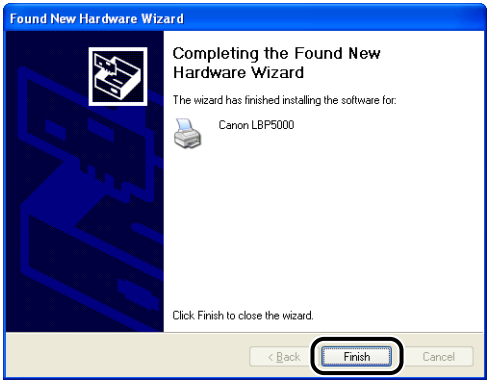

IMPORTANT

If you are using a computer with Windows XP Service Pack 2 or another operating system equipped with Windows Firewall as the print server, you need to configure Windows Firewall to unblock communication with the client computers. (See p. 8-15)

The installation of the USB class driver (supplied with an operating system) and the printer driver is completed.

Installing from [Add Printer Wizard]

NOTE

When installing the CAPT software from [Add Printer Wizard], the USB port for connecting this printer has to have already been registered.

For Windows 98/Me

The screen shots used in this section are from Windows Me.

1 **From the [Start] menu, select [Settings] → [Printers] to open the [Printers] folder. Then, double-click [Add Printer].**

The [Add Printer Wizard] dialog box is displayed.

NOTE

The [Add Printer Wizard] dialog box can also be displayed using the following procedure:

- Double-click [My Computer] → [Control Panel] → [Printers] → [Add Printer] (For Windows Me).
- Double-click [My Computer] → [Printers] → [Add Printer] (For Windows 98).

2 **Click [Next].**

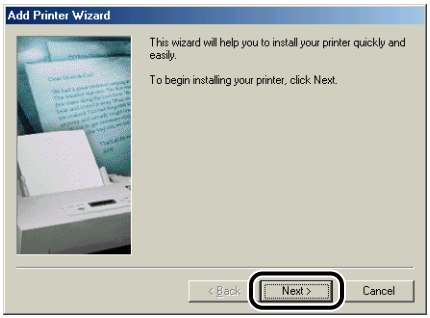

3 Select [Local printer], then click [Next].

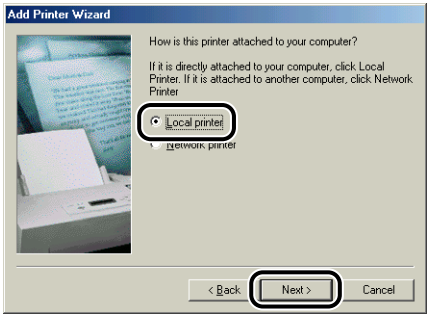

NOTE

This screen does not appear when the network settings have not been configured.

4 Click [Have Disk].

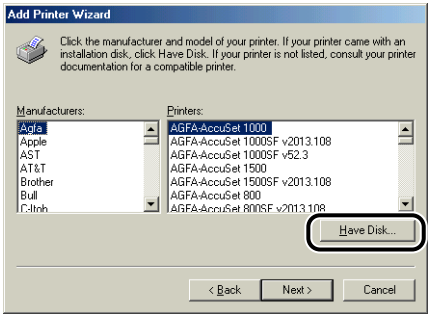

5 Insert the supplied "LBP5000 User Software" CD-ROM into the CD-ROM drive, and then click [Browse].

If CD-ROM Setup appears, click [Exit].

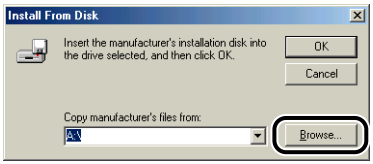

6 Select [D:\English\Win98_Me], then click [OK].

The CD-ROM drive name is indicated as "D:" in this manual. The CD-ROM drive name may differ depending on the computer you are using.

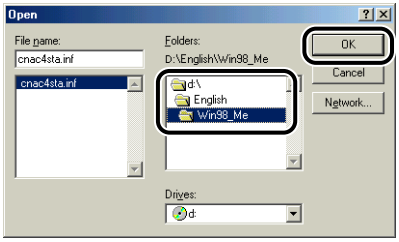

7 Confirm the contents of [Copy manufacturer's files from], then click [OK].

For example, when your CD-ROM drive is drive [D:], it is displayed as [D:\English\Win98_Me].

8 Select the name of this printer for [Printers], then click [Next].

9 Select the USB port for connecting this printer, and then click [Next].

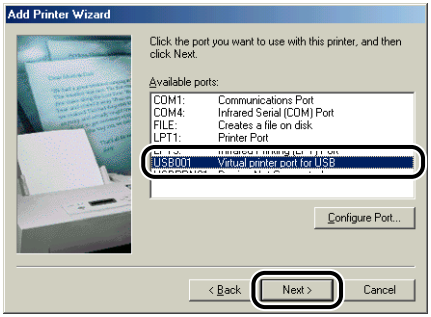

10 Enter a new name in [Printer name] if you want to change the printer name.

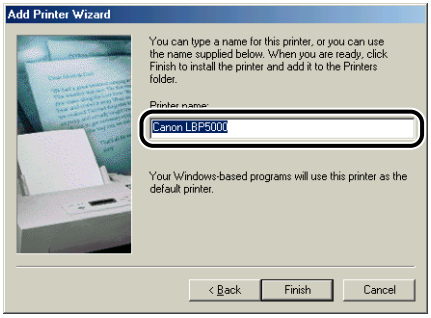

NOTE

If another printer driver has already been installed in the computer, the message <Do you want your Windows-based programs to use this printer as the default printer?> appears. In this case, select [Yes] or [No].

11 Click [Finish].

Copying files is started.

12 **When the dialog box for completing the installation appears, click [OK].**

13 **If the printer and computer are not connected, turn the computer off, connect the computer and printer with a USB cable, and then turn them ON.**

The installation of the printer driver is completed.

For Windows 2000

IMPORTANT

When printing a test page, make sure that the printer is properly connected to the computer and the printer is ON before installing the CAPT software.

1 **Turn the computer on and start up Windows 2000.**

2 **Log on as a member of Administrators.**

IMPORTANT

If a Wizard appears by the Plug and Play automatic setup, click [Cancel], and then install the CAPT software using this procedure.

NOTE

Full Control Permission is required for the installation of the printer driver.

3 From the [Start] menu, select [Settings] → [Printers] to open the [Printers] folder. Then, double-click [Add Printer].

4 Click [Next].

5 Make sure that [Local printer] is selected, then click [Next].

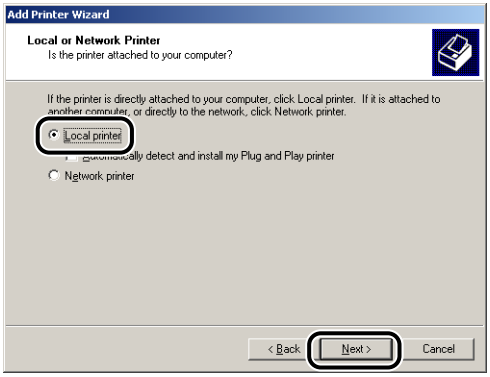

NOTE

Do not select the [Automatically detect and install my Plug and Play printer] check box.

6 Select the USB port for connecting this printer, and then click [Next].

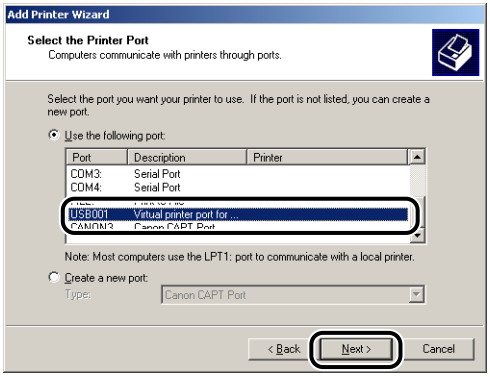

7 Click [Have Disk].

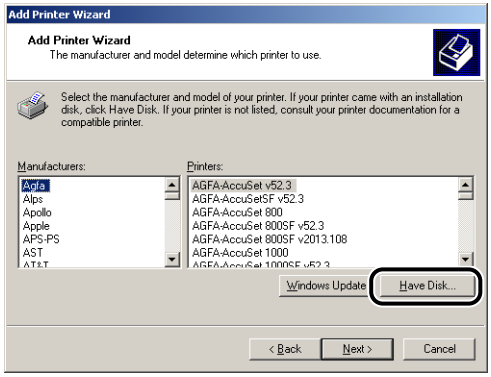

8 Insert the supplied "LBP5000 User Software" CD-ROM into the CD-ROM drive, and then click [Browse].

If CD-ROM Setup appears, click [Exit].

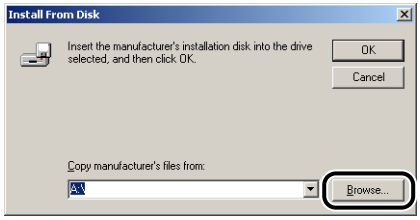

9 Select [D:\English\Win2K_XP]. Select [CNAC4STK.INF], then click [Open].

The CD-ROM drive name is indicated as "D:" in this manual. The CD-ROM drive name may differ depending on the computer you are using.

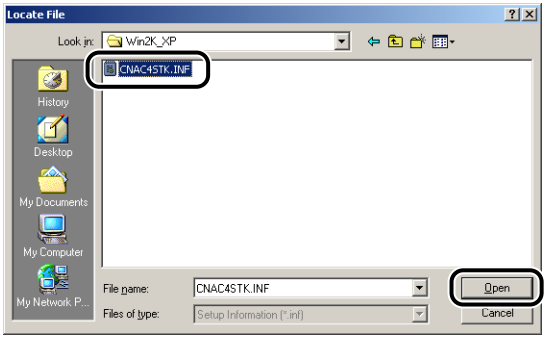

10 Confirm the contents of [Copy manufacturer's files from], then click [OK].

For example, when your CD-ROM drive is drive [D:], it is displayed as [D:\English\Win2K_XP].

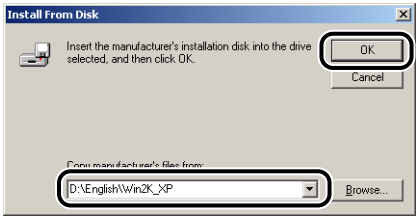

11 Click [Next].

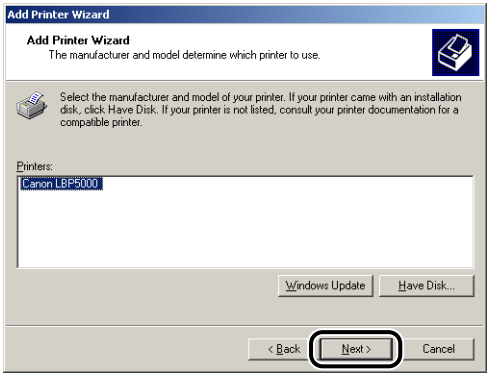

12 Enter a new name in [Printer name] if you want to change the printer name, then click [Next].

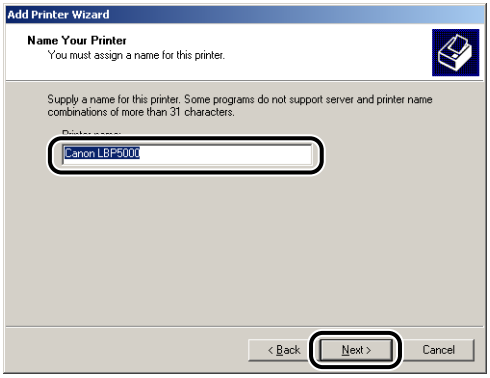

NOTE

If another printer driver has already been installed in the computer, the message <Do you want your Windows-based programs to use this printer as the default printer?> appears. In this case, select [Yes] or [No].

13 Click [Next].

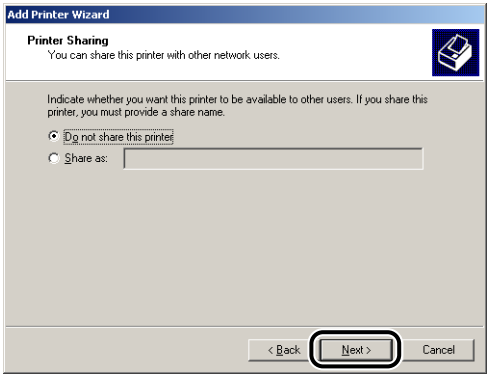

NOTE

When sharing this printer on a network, select [Share as], and then click [Next]. The window for entering [Location] and [Comment] is displayed. Enter them as needed, then click [Next].

14 When printing a test page, click [Yes], then click [Next].

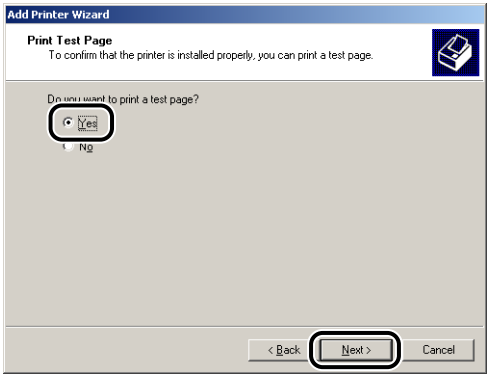

15 Click [Finish].

Copying files is started.

When printing a test page, a dialog box will appear after printing. Click [OK] to close the dialog box.

NOTE

If the [Digital Signature Not Found] dialog box appears, click [Yes].

16 If the printer and computer are not connected, turn the computer off, connect the computer and printer with a USB cable, and then turn them ON.

The installation of the printer driver is completed.

For Windows XP/Server 2003

IMPORTANT

When printing a test page, make sure that the printer is properly connected to the computer and the printer is ON before installing the CAPT software.

1 Turn the computer on and start up Windows XP/Server 2003.

2 Log on as a member of Administrators.

IMPORTANT

If a Wizard appears by the Plug and Play automatic setup, click [Cancel], and then install the CAPT software using this procedure.

NOTE

Full Control Permission is required for the installation of the printer driver.

3 Display the [Printers and Faxes] folder.

For Windows XP Professional/Server 2003
From the [Start] menu, select [Printers and Faxes].
For Windows XP Home Edition
From the [Start] menu, select [Control Panel], and then click [Printers and Other Hardware] → [Printers and Faxes].

4 Click [Add a printer].

For Windows Server 2003: Double-click [Add Printer].

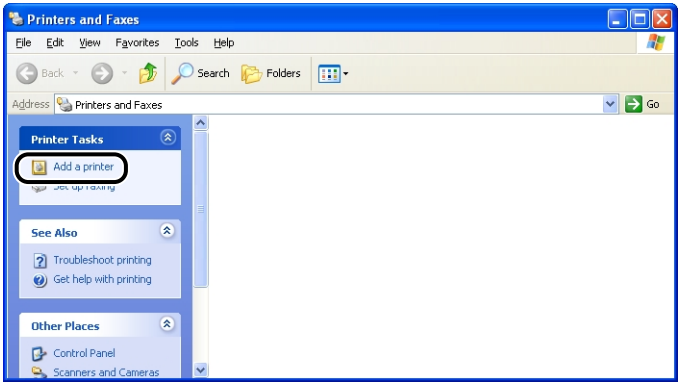

5 Click [Next].

6 Make sure that [Local printer attached to this computer] is selected, then click [Next].

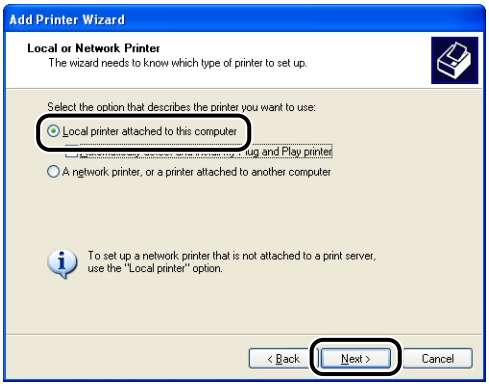

NOTE

Do not select the [Automatically detect and install my Plug and Play printer] check box.

7 Make sure that [Use the following port] is selected, select the USB port to which this printer is connected, and then click [Next].

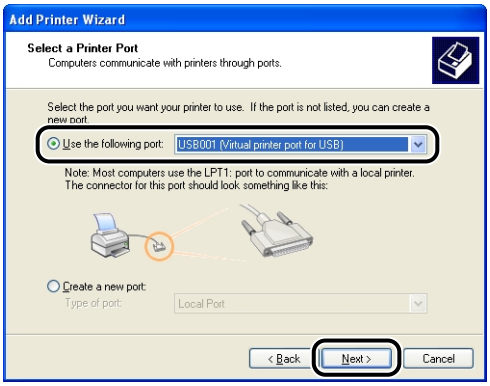

8 Click [Have Disk].

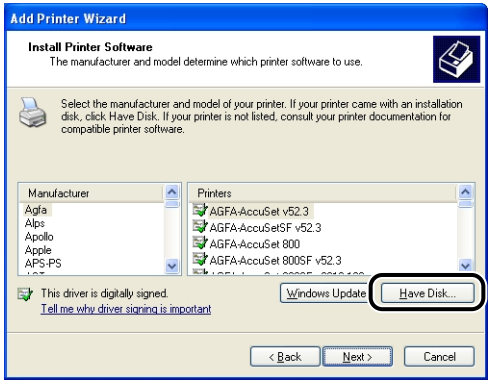

9 Insert the supplied "LBP5000 User Software" CD-ROM into the CD-ROM drive, and then click [Browse].

If CD-ROM Setup appears, click [Exit].

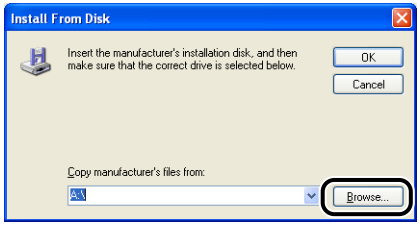

10 Select [D:\English\Win2K_XP]. Select [CNAC4STK.INF], then click [Open].

The CD-ROM drive name is indicated as "D:" in this manual. The CD-ROM drive name may differ depending on the computer you are using.

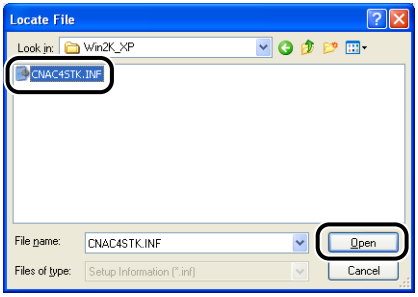

11 Confirm the contents of [Copy manufacturer's files from], then click [OK].

For example, when your CD-ROM drive is drive [D:], it is displayed as [D:\English\Win2K_XP].

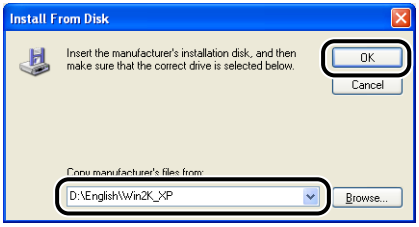

12 Click [Next].

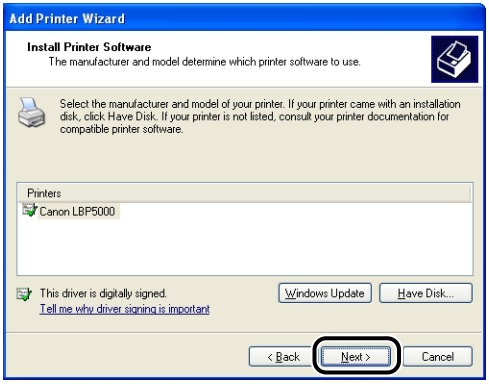

13 Enter a new name in [Printer name] if you want to change the printer name, then click [Next].

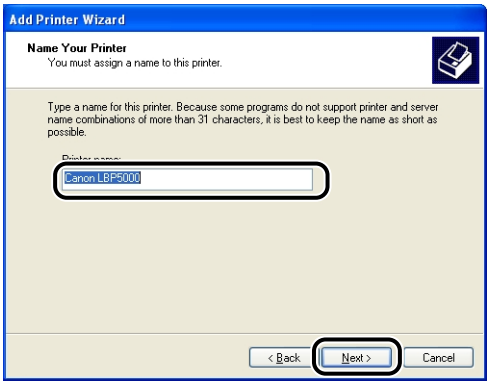

NOTE

If another printer driver has already been installed in the computer, the message <Do you want to use this printer as the default printer?> appears. In this case, select [Yes] or [No].

14 Click [Next].

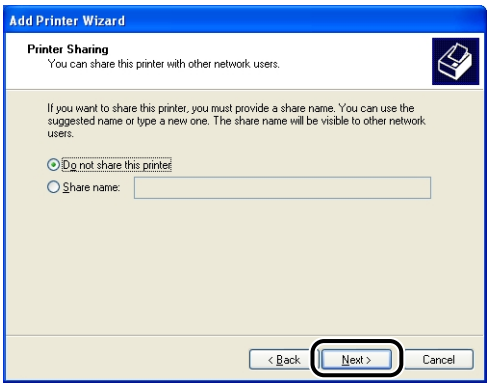

NOTE

When sharing this printer on a network, select [Share name], and then click [Next]. The window for entering [Location] and [Comment] is displayed. Enter them as needed, then click [Next].

15 When printing a test page, click [Yes], then click [Next].

16 Click [Finish].

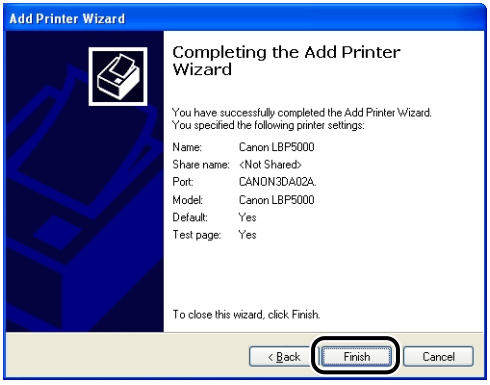

Copying files is started.

When printing a test page, a dialog box will appear after printing. Click [OK] to close the dialog box.

NOTE

If the [Hardware Installation] dialog box appears, click [Continue Anyway].

17 If the printer and computer are not connected, turn the computer off, connect the computer and printer with a USB cable, and then turn them ON.

IMPORTANT

If you are using a computer with Windows XP Service Pack 2 or another operating system equipped with Windows Firewall as the print server, you need to configure Windows Firewall to unblock communication with the client computers. (See p. 8-15)

The installation of the printer driver is completed.

After Completing Installation

When the installation of the CAPT software is completed, an icon and folder for this printer will be created as follows.

■ For Windows 98/Me/2000

- The icon for the printer is displayed in the [Printers] folder.

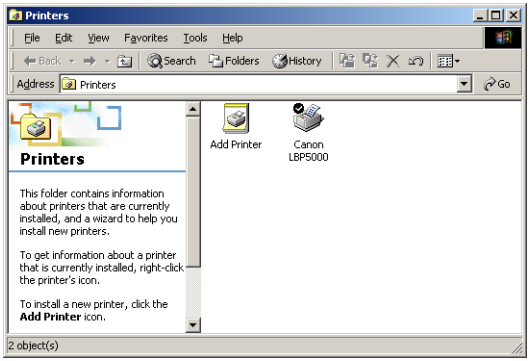

- [Canon Printer Uninstaller] is added to [Programs] under the [Start] menu.

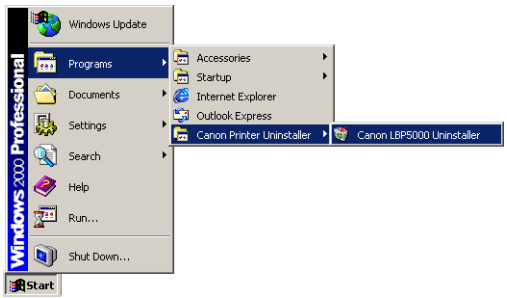

- If the manuals are installed, [LBP5000 Online Manuals] is created on the desktop.

■ For Windows XP/Server 2003

- The icon for this printer is displayed in the [Printers and Faxes] folder.

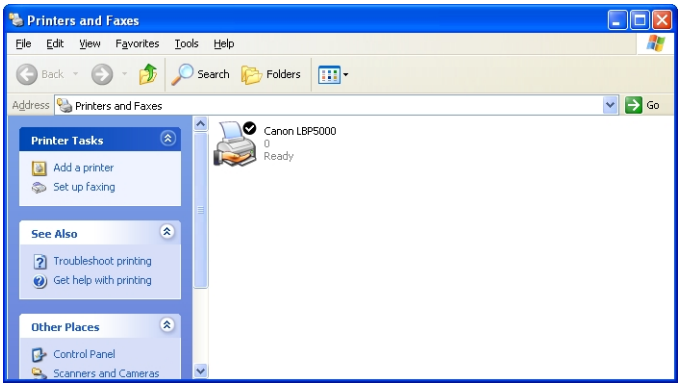

- [Canon Printer Uninstaller] is added to [All Programs] under the [Start] menu.

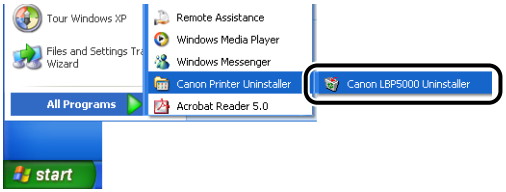

- If the manuals are installed, [LBP5000 Online Manuals] is created on the desktop.

Checking the Operations by Configuration Page Print

Before using the printer for the first time, be sure to perform Configuration Page Print to check the operations using the following procedure. Configuration Page Print prints the optional settings of the printer and printer status such as [Number of Total Printed Pages].

NOTE

- Configuration Page Print is designed to be printed on A4 size paper. Load A4 size paper.
- The screen shots used in this section are from Windows XP Professional.

1 Display the [Printers and Faxes] folder or the [Printers] folder.

For Windows 98/Me/2000: From the [Start] menu, select [Settings] → [Printers].
For Windows XP Professional/Server 2003: From the [Start] menu, select [Printers and Faxes].
For Windows XP Home Edition: From the [Start] menu, select [Control Panel], and then click [Printers and Other Hardware] → [Printers and Faxes].

2 Select the icon for this printer, then select [Printing Preferences] from the [File] menu.

For Windows 98/Me: Select the icon for this printer, then select [Properties] from the [File] menu.

3 Display the [Page Setup] sheet, then click [ ] (Display Printer Status Window) to run the Printer Status Window.

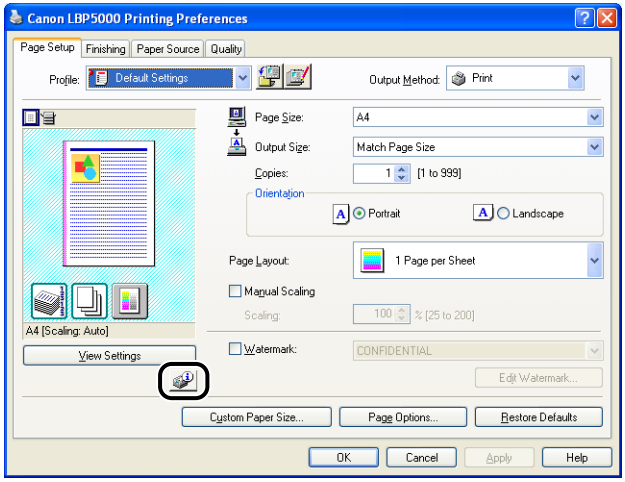

NOTE

For details on the Printer Status Window, see "Printer Status Window," on p. 4-85.

4 From the [Options] menu, select [Utility] → [Configuration Page Print].

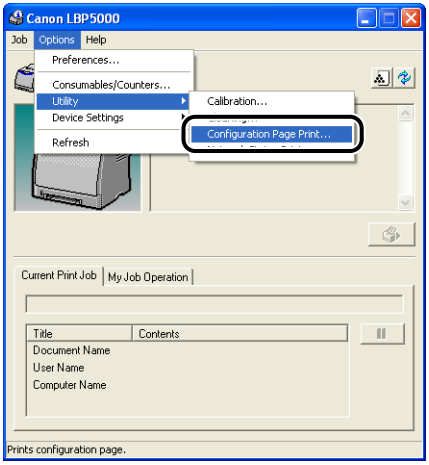

5 Click [OK].

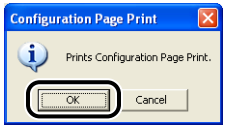

Configuration Page Print is printed.

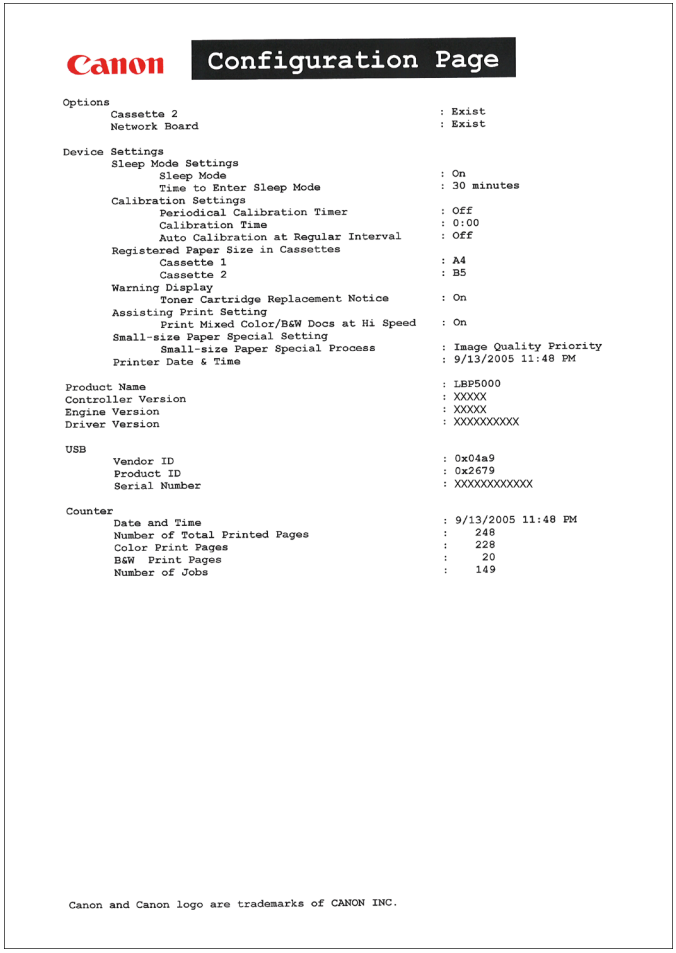

Canon **Configuration Page**

```
Options
        Cassette 2                                      : Exist
        Network Board                                   : Exist

Device Settings
        Sleep Mode Settings
                Sleep Mode                              : On
                Time to Enter Sleep Mode                : 30 minutes
        Calibration Settings
                Periodical Calibration Timer            : Off
                Calibration Time                        : 0:00
                Auto Calibration at Regular Interval    : Off
        Registered Paper Size in Cassettes
                Cassette 1                              : A4
                Cassette 2                              : B5
        Warning Display
                Toner Cartridge Replacement Notice      : On
        Assisting Print Setting
                Print Mixed Color/B&W Docs at Hi Speed  : On
        Small-size Paper Special Setting
                Small-size Paper Special Process        : Image Quality Priority
        Printer Date & Time                             : 9/13/2005 11:48 PM

Product Name                                            : LBP5000
Controller Version                                      : XXXXX
Engine Version                                          : XXXXX
Driver Version                                          : XXXXXXXXXX

USB
        Vendor ID                                       : 0x04a9
        Product ID                                      : 0x2679
        Serial Number                                   : XXXXXXXXXXXX

Counter
        Date and Time                                   : 9/13/2005 11:48 PM
        Number of Total Printed Pages                   :    248
        Color Print Pages                               :    228
        B&W  Print Pages                                :     20
        Number of Jobs                                  :    149
```

Canon and Canon logo are trademarks of CANON INC.

IMPORTANT

This is a sample of Configuration Page Print. The contents may differ from the Configuration Page Print printed by your computer.

NOTE

If Configuration Page Print is not printed properly, see "Chapter 7 Troubleshooting".

Printing from a Network Computer by Sharing the Printer on a Network

When you share this printer on a network, you can use it as a network printer, which enables printing from other computers that are not directly connected to this printer.

If this printer is going to be used by multiple computers on a network, perform the following configuration. In this manual, the computer directly connected to the printer is called "print server", and the other computers which use the printer via the network are called "clients".

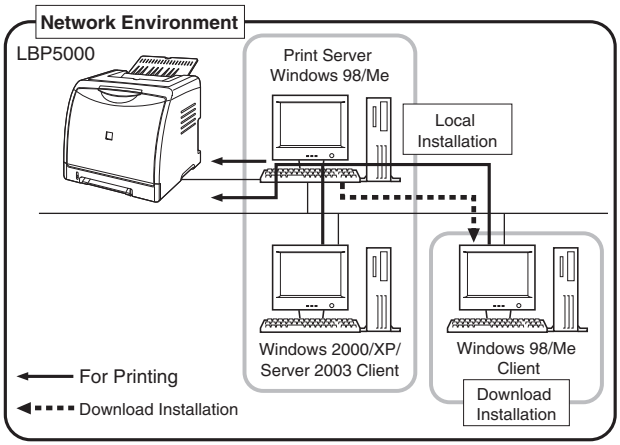

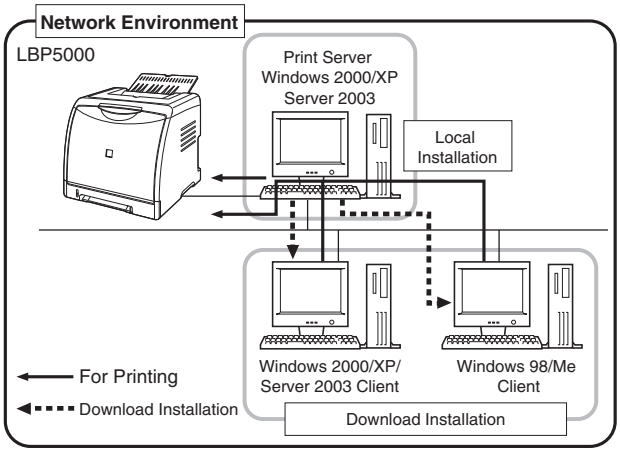

When using a print server, perform the following settings:

Setting		See
1	**Install the printer driver on the print server**	
	- When the printer and print server are connected by the USB cable	See p. 3-4
	- When the optional network board is installed and the printer and print server are connected by the LAN cable	See Network Guide
2	**Print Server Settings**	See p. 3-55
3	**Installation on Clients**	See p. 3-62

NOTE

Using this printer on your network requires that both the print server and clients should be using Windows 98/Me or Windows 2000/XP/Server 2003.

Print Server Settings

This section describes the procedure assuming that the print server is running Windows2000/XP/Server 2003.

NOTE

- If you configure the sharing function of the print server or clients that are running Windows 98/Me, use the following procedure.
  1. Double-click [My Computer] → [Control Panel] → the [Network] icon.
  2. Display the [Configuration] sheet, then click [Add].
  3. Select the [Service] icon, then click [Add].
  4. Select [File and printer sharing for Microsoft Networks], then click [OK].
  5. Click [File and Printer Sharing], make sure that [I want to be able to allow others to print to my printer(s).] is selected, then click [OK].
  6. Display the [Access Control] sheet, select [Share-level access control] or [User-level access control], and then click [OK] to restart Windows.
  7. After Windows restarts, from the [Start] menu, select [Settings] → [Printers].
  8. Right-click the icon for this printer, then select [Sharing] from the pop-up menu.
  9. Select [Shared As]. Change [Share Name] if you want to, then enter [Comment] and [Password] as needed.
  10. Click [OK].
- The screen shots used in this section are from Windows XP Professional.

■ Preparing the Printer Sharing Settings

1 From the [Start] menu, select [Control Panel], and then click [Network and Internet Connections] → [Network Connections].

For Windows 2000: From the [Start] menu, select [Settings] → [Network and Dial-up Connections].
For Windows Server 2003: From the [Start] menu, select [Control Panel] → [Network Connections] → [Local Area Connection], click [Properties], and then proceed to Step 3.

For Windows 2000: The [Network and Dial-up Connections] folder is displayed.
For Windows XP: The [Network Connections] folder is displayed.

2 Right-click the [Local Area Connection] icon, then select [Properties] from the pop-up menu.

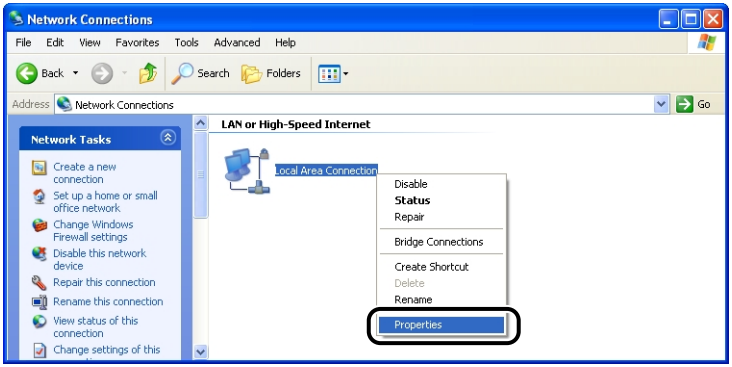

3 Make sure that [File and Printers Sharing for Microsoft Networks] is selected, then click [OK].

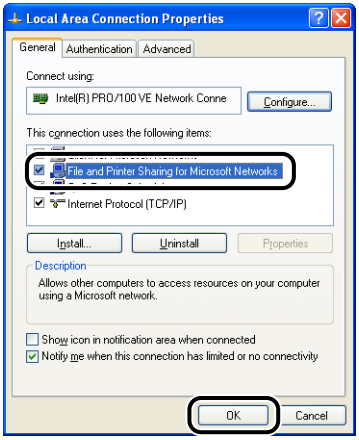

■ *Printer Sharing Settings*

NOTE

For Windows XP, the printer cannot be shared on a network at the default settings (the settings immediately after the installation).
Printer sharing settings require running [Network Setup Wizard] to enable the sharing settings. For more details, see Windows online Help.

---

1 Display the [Printers and Faxes] folder or the [Printers] folder.

For Windows 2000: From the [Start] menu, select [Settings] → [Printers].
For Windows XP Professional/Server 2003: From the [Start] menu, select [Printers and Faxes].
For Windows XP Home Edition: From the [Start] menu, select [Control Panel], and then click [Printers and Other Hardware] → [Printers and Faxes].

2 Right-click the icon for this printer, then select [Sharing] from the pop-up menu.

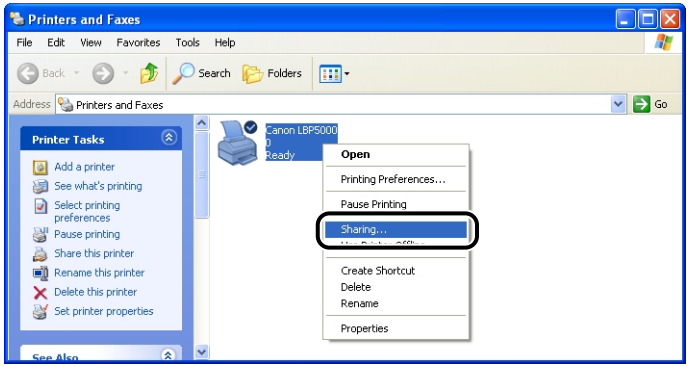

3 Select [Share this printer]. Change the share name as needed.

For Windows 2000: Select [Shared as].

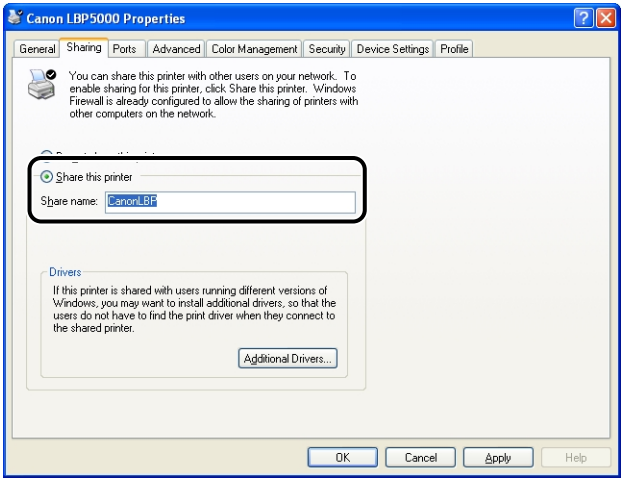

NOTE

- You can also specify the sharing settings during the local installation.
- Do not enter blank or special characters for the share name.

4 If any client is using Windows 98/Me, click [Additional Drivers].

If no client is using Windows 98/Me, click [OK]. The printer icon changes to the shared printer icon, and the printer sharing settings are completed.

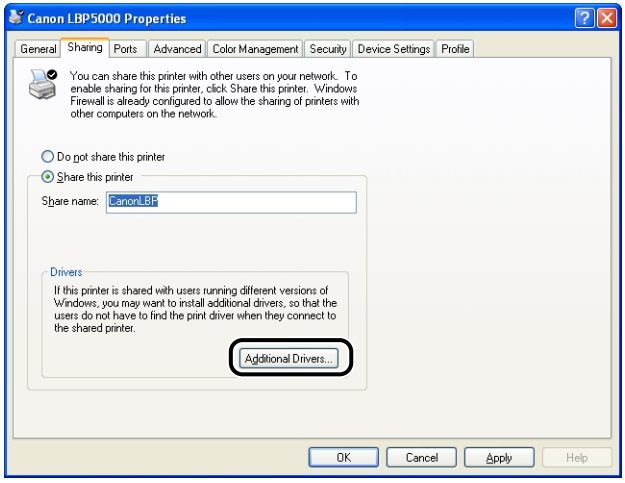

5 Select the [Windows 95, 98 and Me] check box, then click [OK].

For Windows 2000: Select the [Windows 95 or 98] check box, then click [OK].
For Windows XP/Server 2003: Select the [Windows 95, Windows 98, and Windows Millennium Edition] check box, then click [OK].

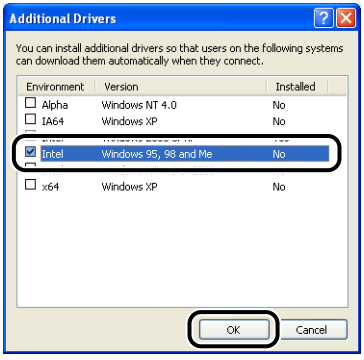

6 Insert the supplied "LBP5000 User Software" CD-ROM into the CD-ROM drive.

If the [Insert Disk] dialog box appears, click [OK].

7 Click [Browse]. When your CD-ROM drive is drive [D:], select [D:\English\Win98_Me], and then click [OK].

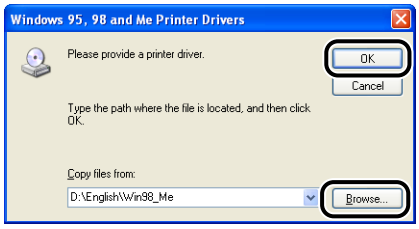

Copying files is started.

8 Click [Close].

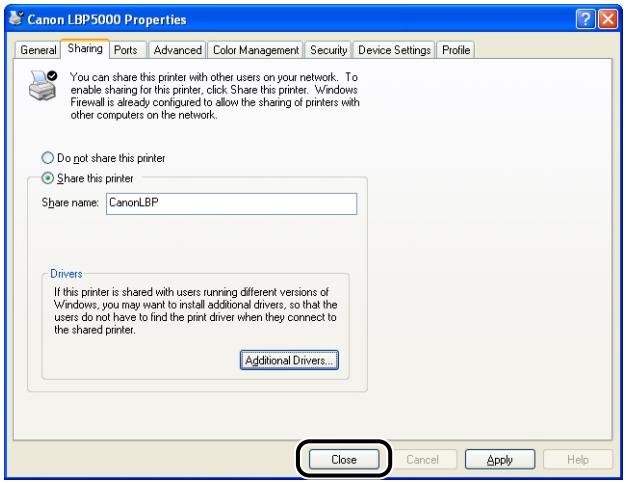

The printer icon changes to the shared printer icon.

IMPORTANT

To clear the printer sharing settings, select [Do not share this printer] ([Not shared] for Windows 2000) in the [Sharing] sheet. If you cleared the printer sharing settings with Windows XP Service Pack 2 or another operating system equipped with Windows Firewall, you need to delete the settings registered in Windows Firewall using the utility software. (See p. 8-15)

■ Configuring Windows Firewall

If you are using Windows XP Service Pack 2 or another operating system equipped with Windows Firewall as the print server, you need to configure Windows Firewall to allow communication with the client computers.

Use the following procedure to ensure that Windows Firewall does not block this communication.

- If you installed the CAPT software from CD-ROM Setup, a [Warning] dialog box was displayed.

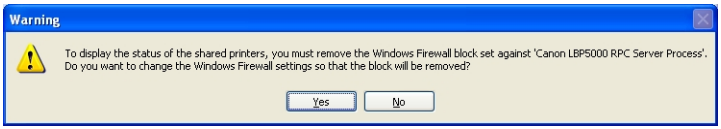

  - If you clicked [Yes], Windows Firewall was configured to allow communication with the client computers.
  - If you clicked [No], however, Windows Firewall was configured to block communication with the client computers, and you will need to use the following method to clear that block.

  1. From the [Start] menu, select [Control Panel], and then click [Network and Internet Connections] → [Windows Firewall].
  2. In the [Exceptions] sheet in the [Windows Firewall] dialog box, select the [Canon LBP5000 RPC Server Process] check box, and then click [OK].

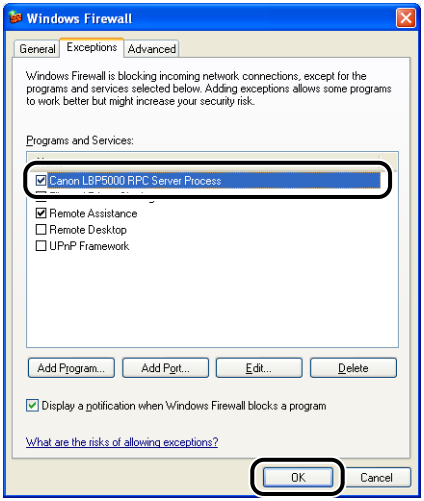

- If you installed the CAPT software by any method other than CD-ROM Setup, you need to configure Windows Firewall to unblock communication with the client computers using the utility software. (See p. 8-15)

Installation on Clients

This section describes the procedure for installing the printer driver on a client computer.

There are two ways to install the printer driver: local installation and download installation.

■ Local Installation (See p. 3-63)

Installing the printer driver using the supplied CD-ROM.

■ Download Installation

Installing the printer driver without using the supplied CD-ROM, but by downloading the printer driver from the print server. There are the following two ways to download and install the printer driver:

- Installing from [Add Printer Wizard] (See p. 3-70)
- Installing from [Windows Explorer] (See p. 3-74)

IMPORTANT

- If you are using Windows 2000/XP/Server 2003, be sure to log on as a member of Administrators when starting up.
- If you are using Windows XP Service Pack 2 or another operating system equipped with Windows Firewall on a client computer, configure the following settings. If you do not perform the following settings on the client computers, the printer status may not be displayed properly in the Printer Status Window, and some of the printer functions may not operate properly.

1. From the [Start] menu, select [Control Panel], and then click [Network and Internet Connections] → [Windows Firewall].
2. In the [Exceptions] sheet in the [Windows Firewall] dialog box, select the [File and Printer Sharing] check box, and then click [OK].

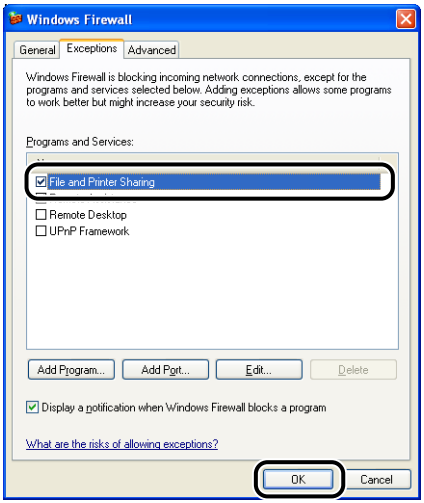

NOTE

- Clients can use either Windows 98/Me or Windows 2000/XP/Server 2003.
- If your print server is Windows 98/Me, you cannot download and install the driver on Windows 2000/XP/Server 2003.
- The screen shots used in this section are from Windows XP Professional.

Installing from CD-ROM Setup

1 Insert the supplied "LBP5000 User Software" CD-ROM into the CD-ROM drive.

If the CD-ROM is already in the drive, eject the disk and re-insert it into the drive.

IMPORTANT

If CD-ROM Setup does not appear, select [Run] from the [Start] menu, enter "D:\English\MInst.exe", and then click [OK]. (The CD-ROM drive name is indicated as "D:" in this manual. The CD-ROM drive name may differ depending on the computer you are using.)

2 Click [Easy Installation] or [Custom Installation].

[Easy Installation] allows you to install the printer driver and the instruction manuals simultaneously. If you do not install the manuals, select [Custom Installation].

3 Click [Install].

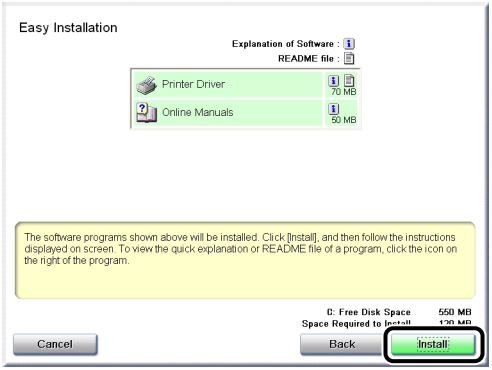

If you selected [Custom Installation] in Step 2, clear the [Online Manuals] check box, and then click [Install].

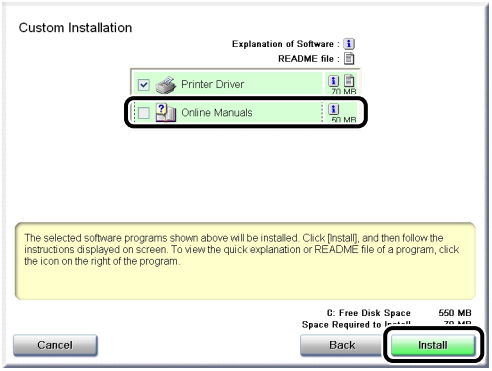

4 Click [Next].

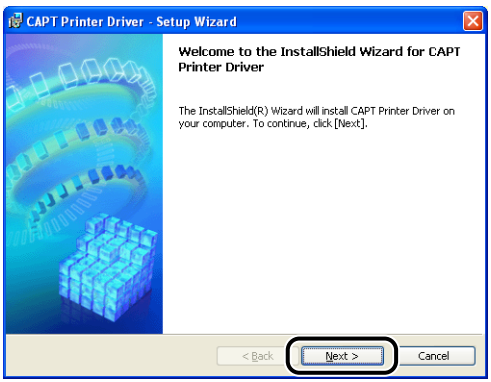

5 Confirm the contents and select [I accept the terms in the license agreement], and then click [Next].

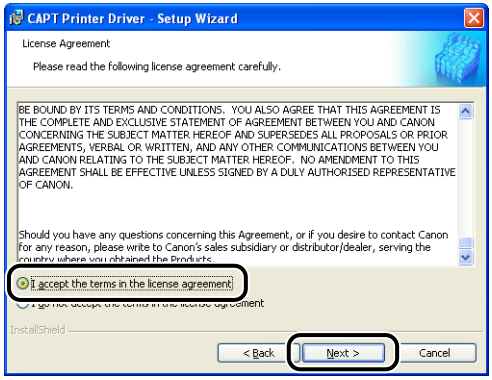

6 Select [Manually Set Port to Install], then click [Next].

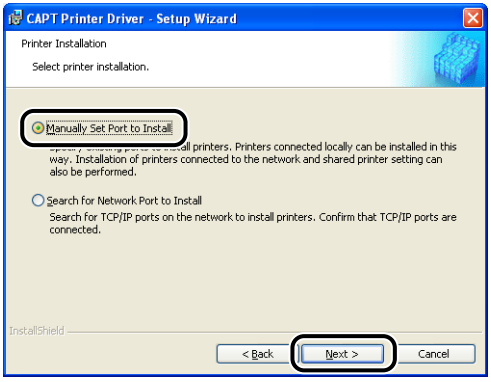

7 If the [Install Printer driver through a USB Connection] check box is selected, clear the check box, then click [Next].

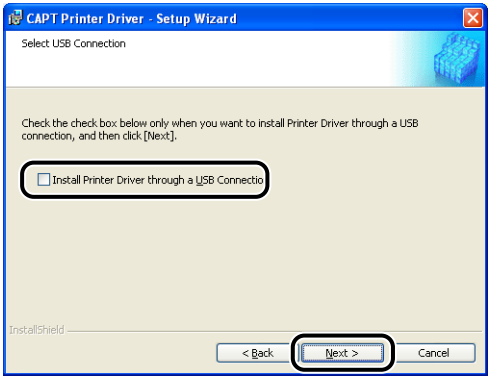

NOTE

Do not select the [Install Printer Driver through a USB Connection] check box.

8 Select [Use Network Printer] for [Port Settings], then click [Settings].

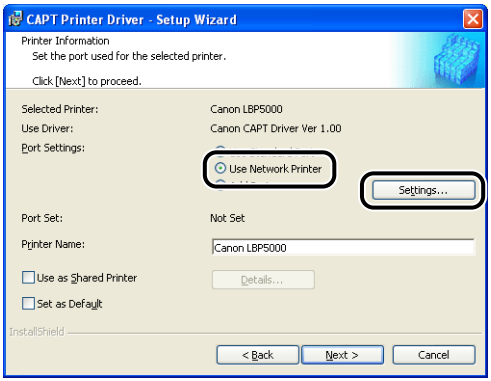

9 Select the icon for the shared printer in the print server, then click [OK].

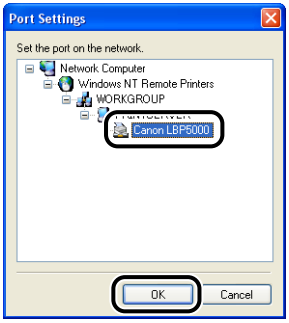

10 Select whether or not to use this printer as the default printer, then click [Next].

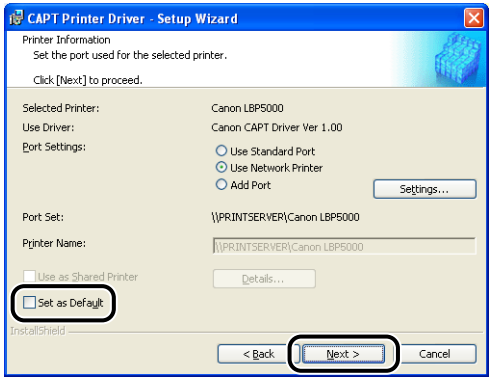

11 Click [Start].

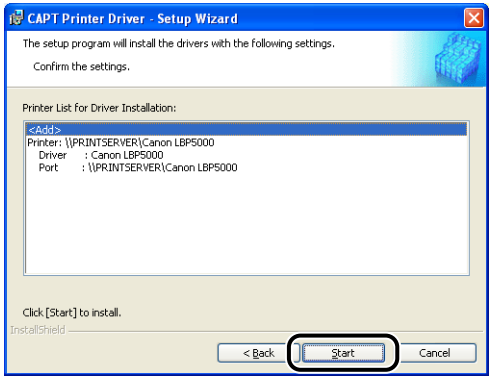

If you are using Windows XP Service Pack 2 or another operating system equipped with Windows Firewall, the following screen is displayed. Click [No].

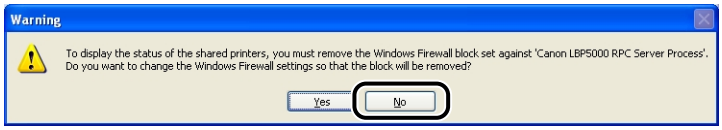

Select [Yes] only when the computer on which you are currently installing the printer driver is to be used as a print server.

12 The message <Installation cannot be stopped once it starts. Do you want to continue?> appears. Click [Yes].

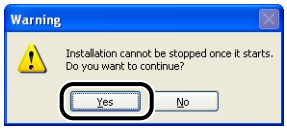

Installation of the printer driver starts.

13 The screen that informs you of the completion of the printer driver installation is displayed. Click [Exit].

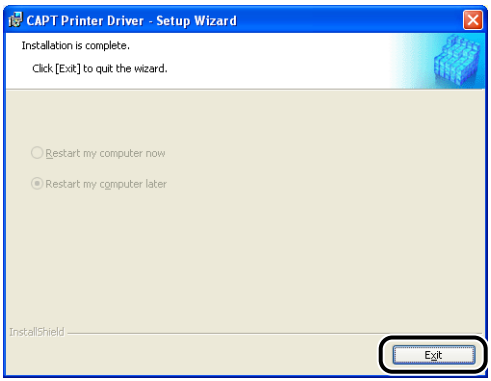

14 If [Easy Installation] is selected in Step 2, the manuals are installed.

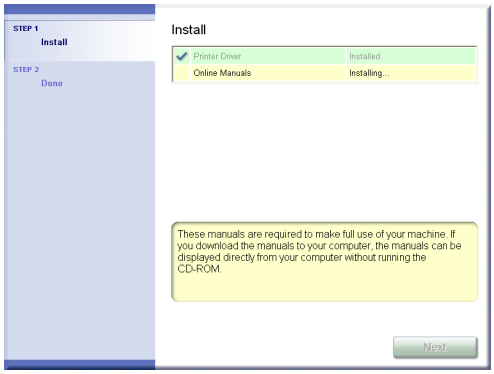

15 Confirm the installation results, then click [Next].

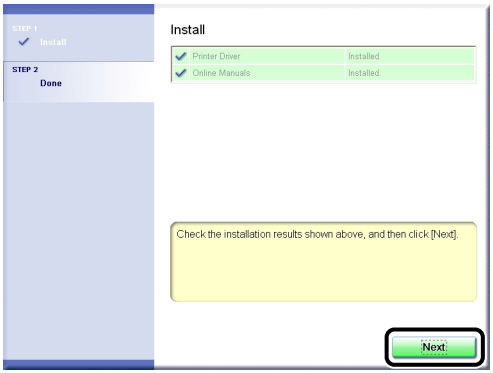

NOTE

If the printer driver is not installed properly, see "Installation Problems," on p. 7-29.

16 Select the [Restart Computer Now (Recommended)] check box, then click [Restart].

Windows restarts.

IMPORTANT

If you are using Windows XP Service Pack 2 or another operating system equipped with Windows Firewall on the client computers, configure Windows Firewall to unblock communication with the print server. If you do not clear the block, the printer status may not be displayed properly in the Printer Status Window, and some of the printer functions may not operate properly. (See p. 8-15)

Installing from [Add Printer Wizard]

1 Display the [Printers and Faxes] folder or the [Printers] folder.

For Windows 98/Me/2000: From the [Start] menu, select [Settings] → [Printers].
For Windows XP Professional/Server 2003: From the [Start] menu, select [Printers and Faxes].
For Windows XP Home Edition: From the [Start] menu, select [Control Panel], and then click [Printers and Other Hardware] → [Printers and Faxes].

2 Display the [Add Printer Wizard] dialog box.

For Windows 98/Me/2000: Double-click [Add Printer].
For Windows XP Professional/Home Edition: Click [Add a printer].
For Windows Server 2003: Double-click [Add Printer].

3 Click [Next].

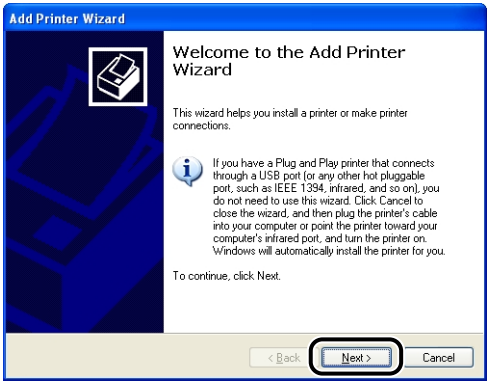

4 Select [A network printer, or a printer attached to another computer], then click [Next].

For Windows 98/Me/2000: Select [Network printer] then click [Next].

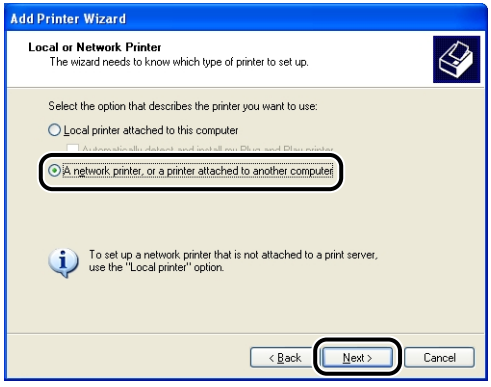

5 Select [Connect to this printer (or to browse for a printer, select this option and click Next)], then click [Next].

For Windows 98/Me, click [Browse].

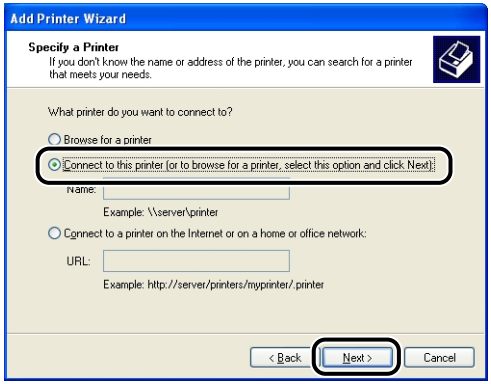

6 Select the directory of the print server, then click [Next].

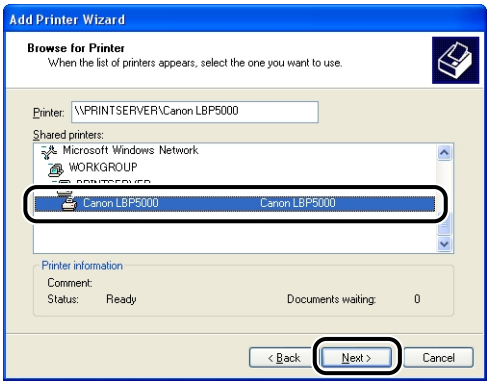

For Windows 98/Me: Proceed to Step 8.

NOTE

If you are using Windows XP/Server 2003 and the [Connect to Printer] dialog box appears, follow the directions in the message.

7 Select whether or not to use this printer as the default printer, then click [Next].

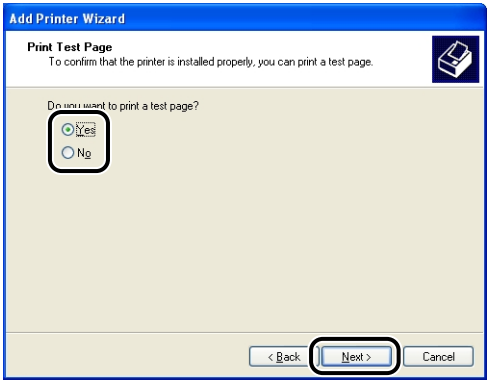

8 Click [Finish].

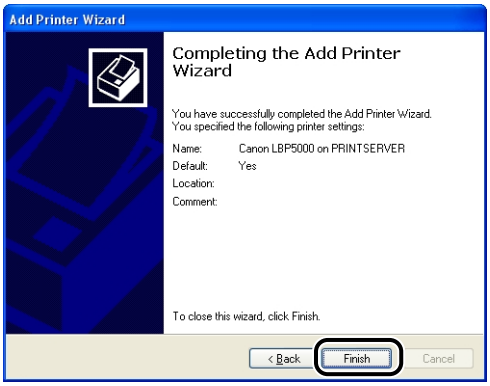

IMPORTANT

If you are using Windows XP Service Pack 2 or another operating system equipped with Windows Firewall on the client computers, configure Windows Firewall to unblock communication with the print server. If you do not clear the block, the printer status may not be displayed properly in the Printer Status Window, and some of the printer functions may not operate properly. (See p. 8-15)

Installing from [Windows Explorer]

1 **From the [Start] menu, select [All Programs] → [Accessories] →[Windows Explorer].**

For Windows Me/2000: From the [Start] menu, select [Programs] → [Accessories] → [Windows Explorer].
For Windows 98: From the [Start] menu, select [Programs] → [Windows Explorer].

2 **Select the print server from [My Network Places] (from [Network Neighborhood] for Windows 98), then double-click the icon for this printer.**

Alternatively, you can drag and drop the icon for the printer into the [Printers and Faxes] folder or [Printers] folder.

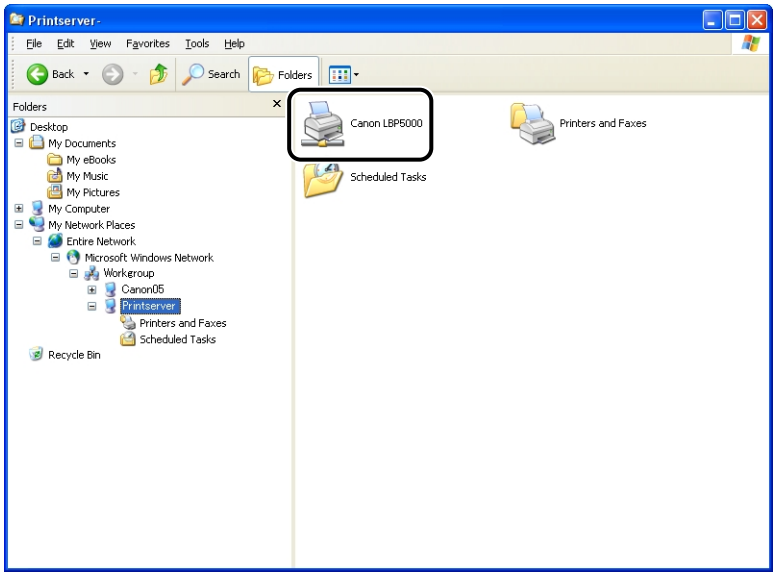

3 **Follow the instructions on the screen.**

IMPORTANT

If you are using Windows XP Service Pack 2 or another operating system equipped with Windows Firewall on the client computers, configure Windows Firewall to unblock communication with the print server. If you do not clear the block, the printer status may not be displayed properly in the Printer Status Window, and some of the printer functions may not operate properly. (See p. 8-15)

Uninstalling the CAPT Software

The process of removing software to restore the computer to the same state as before the software was installed is referred to as uninstallation. The CAPT software can be uninstalled using the following procedure.

IMPORTANT

- If the manuals have been installed, you can also uninstall the installed manuals by uninstalling the CAPT software with the Uninstaller.
- If the printer driver was installed on Windows 2000/XP/Server 2003 logged on by a user who is a member of Administrators, it cannot be uninstalled from the computer logged on by anyone other than users who are members of Administrators. Be sure to log in as a member of Administrators before the uninstallation.
- If you are using a computer with Windows XP Service Pack 2 or another operating system equipped with Windows Firewall, the printer is registered in the [Exceptions] sheet in the [Windows Firewall] dialog box. When you uninstall the CAPT software using the uninstaller, the settings for this printer are also removed from the [Exceptions] sheet in the [Windows Firewall] dialog box.

1 Close all of the files and programs listed below:

- Help files
- Printer Status Window
- Control Panel
- Other applications

2 From the [Start] menu, select [All Programs] → [Canon Printer Uninstaller] → [Canon LBP5000 Uninstaller].

For Windows 98/Me/2000: From the [Start] menu, select [Programs] → [Canon Printer Uninstaller] → [Canon LBP5000 Uninstaller].

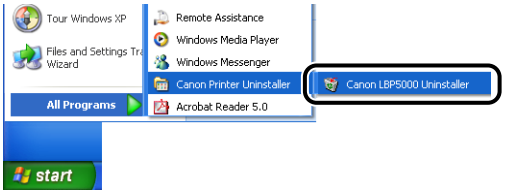

3 Select the name of this printer, then click [Delete].

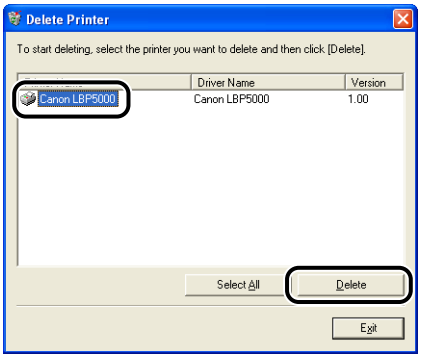

NOTE

Even if [Canon LBP5000] is not on the list in the [Delete Printer] dialog box, you can delete the file and information related to this printer by clicking [Delete].

4 Click [Yes].

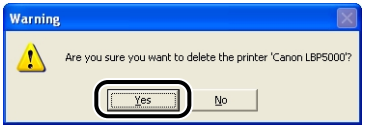

Uninstallation starts. Please wait a moment.

5 Click [Exit].

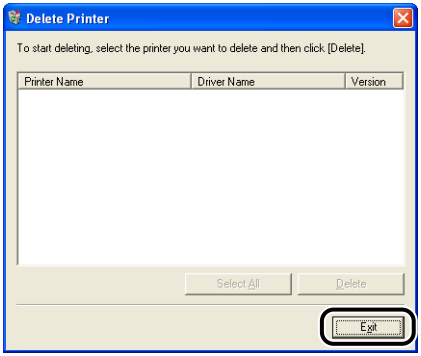

NOTE

If the CAPT software cannot be uninstalled, see "When Uninstallation Fails," on p. 7-30.

Printing a Document

4

CHAPTER

This chapter describes the printing procedures and the functions of this printer.

Setting Printer Information Before Printing 4-3

Printing from an Application 4-5

Specifying the Printing Preferences 4-9

For Windows 98/Me 4-9

For Windows 2000/XP/Server 2003 4-12

Deleting/Pausing/Resuming a Print Job 4-17

Using the Various Printing Functions 4-19

Utilizing a Variety of Options for Printing 4-19

Various Pages in the Printer Driver 4-25

Preview 4-46

Printing Multiple Pages on One Sheet 4-47

Scaling Print Output 4-49

Poster Printing 4-51

Watermark Printing 4-52

Printing Borders and Printing Date 4-54

Printing with a Gutter 4-56

Specifying the Paper Output Method 4-57

Printing with Upper Left of Sheet as Starting Point 4-58

Printing with the Data 180 Degrees Rotated 4-59

Smoothing Out Rough-Textured Images 4-61

Printing with Toner Density Adjusted 4-62

Color Settings 4-64

Specifying the Brightness and Contrast 4-66

Printing a Color Sample (Windows 2000/XP/Server 2003 only) 4-68

Specifying "Profiles" 4-69

Editing Jobs with PageComposer 4-73

How to Use Online Help 4-76

Displaying Online Help on the Options Displayed on the Screen 4-76

Displaying Online Help on the Operation Procedures 4-77

Retrieving the Option about Which You Want to Know with Keywords and Displaying its Online Help 4-79

Manuals 4-82

Installing the Manuals 4-82

Uninstalling the Manuals 4-84

Printer Status Window 4-85
Functions on the Printer Status Window 4-86
Displaying the Printer Status Window 4-88
[Preferences] Menu. 4-90
[Consumables/Counters] Menu 4-91
[Utility] Menu 4-91
[Device Settings] Menu. 4-92
[Refresh] 4-93
[Resolve Error] 4-93
Displaying Printer Status When Using a Print Server 4-93

Setting Printer Information Before Printing

Specify the settings for the paper feeder before printing.

1 Display the [Printers and Faxes] folder or the [Printers] folder.

For Windows 98/Me/2000: From the [Start] menu, select [Settings] → [Printers].
For Windows XP Professional/Server 2003: From the [Start] menu, select [Printers and Faxes].
For Windows XP Home Edition: From the [Start] menu, select [Control Panel], and then click [Printers and Other Hardware] → [Printers and Faxes].

2 Select the icon for this printer, then select [Properties] from the [File] menu.

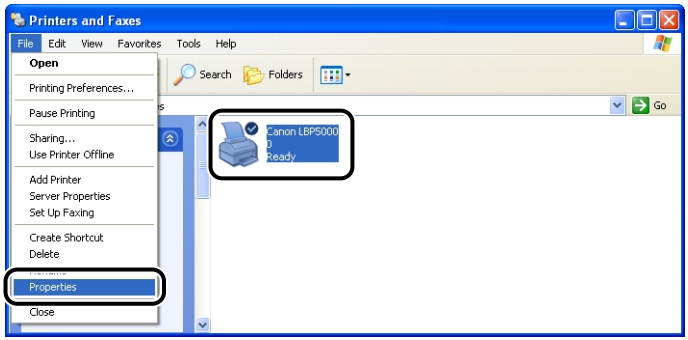

3 Display the [Device Settings] (for Windows 2000/XP/Server 2003) or [Configuration] (for Windows 98/Me) sheet, then specify the settings for [Paper Source Options].

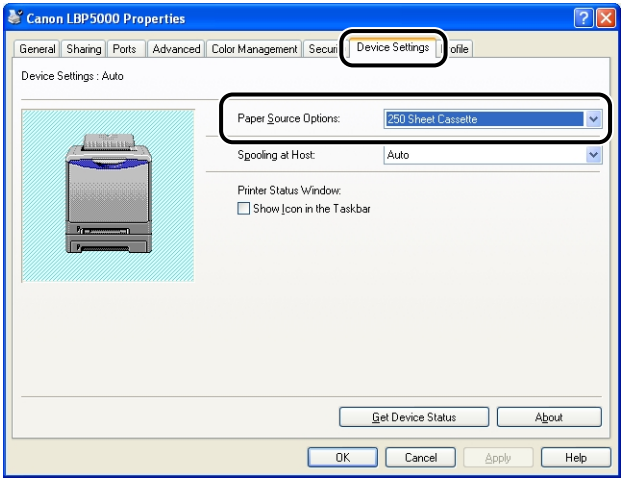

NOTE

You can also obtain the printer status such as the paper feeder automatically by clicking [Get Device Status].

4 Click [OK].

Printing from an Application

After installing the CAPT software, you can now print jobs on the printer.

This section describes the procedure for printing from an application, taking Adobe Reader 6.0 as an example.

1 Load paper in the paper cassette or manual feed slot.

NOTE

When loading plain paper, heavy paper, transparencies, or labels in the paper source, see "Loading Plain Paper, Heavy Paper, Transparencies, or Labels in the Paper Source" (p. 2-14), when loading Index Card size media in the paper source, see "Loading Index Card Size Media in the Paper Source" (p. 2-26), when loading envelopes in the paper source, see "Loading Envelopes in the Paper Source" (p. 2-37), and when loading custom size paper, see "Loading Custom Size Paper (Non-Standard Paper) in the Paper Source" (p. 2-47).

2 Open the PDF file to print with Adobe Reader, and then select [Print Setup] from the [File] menu.

3 Specify the paper size of the document and the printing orientation, then click [OK].

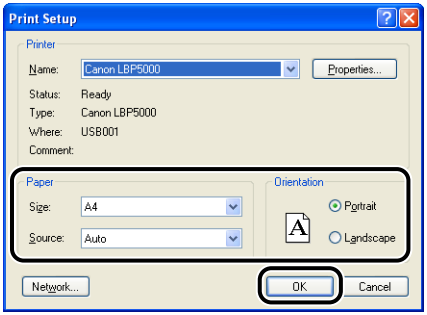

4 Select [Print] from the [File] menu.

The [Print] dialog box is displayed.

5 Select the name of this printer for [Name] or [Printer Name], and then specify the printing preferences.

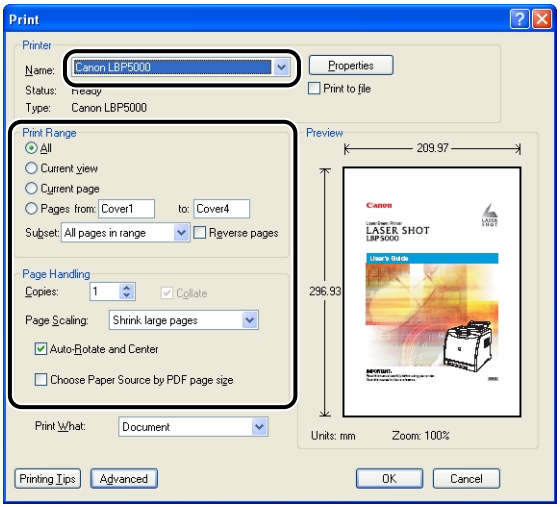

NOTE

The printer name displayed in this dialog box can be changed in the [Printers and Faxes] folder (the [Printers] folder for Windows 98/Me/2000).

6 If you want to specify more detailed printing preferences, click [Properties].

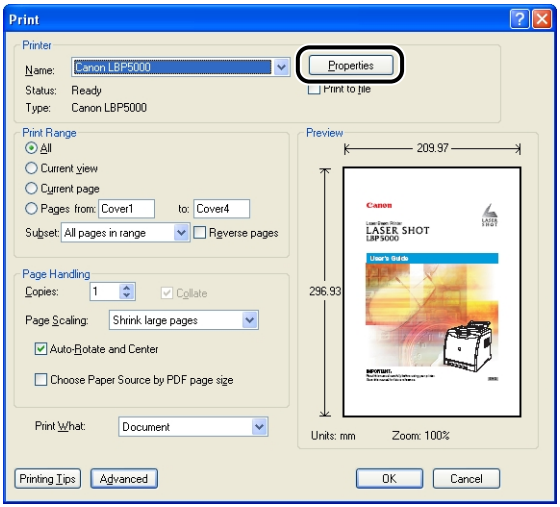

NOTE

The procedure for displaying the [Document Properties] dialog box may differ depending on the application you are using.

7 Specify the printing preferences in the [Page Setup], [Finishing], [Paper Source], and [Quality] sheets.

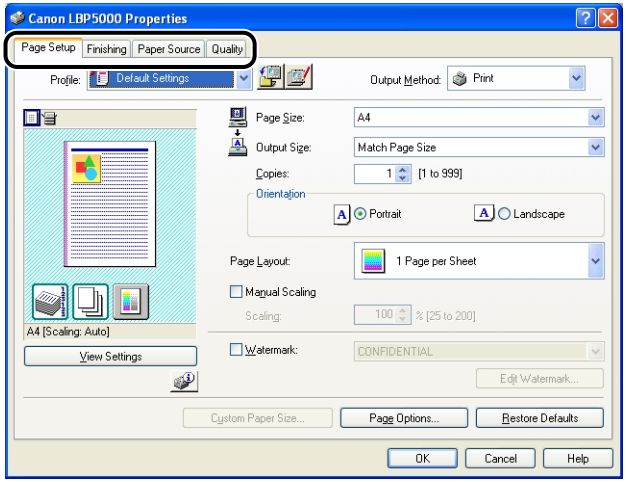

NOTE

- For more details on the settings, see Windows online Help. For details on methods for displaying Online Help, see "How to Use Online Help," on p. 4-76.
- The settings that are specified here only apply to the currently opened file. Check the contents of the [Document Properties] dialog each time you print. In particular, it is recommended that you confirm the contents of the [Page Setup] sheet and the [Paper Source] sheet.
- The default settings for all files can be configured using the following dialog box.
- For Windows 98/Me: Open the [Printer Properties] dialog box from the [Printers] folder. (See "Displaying the [Printer Properties] Dialog Box from the [Printers] Folder," on p. 4-11)
- For Windows 2000/XP/Server 2003: Open the [Document Properties] dialog box from the [Printers and Faxes] folder or the [Printers] folder. (See "Displaying the [Document Properties] Dialog Box from the [Printers and Faxes] Folder or the [Printers] Folder," on p. 4-14)

8 If you want to print the document more clearly, click the [Quality] sheet, then select [Photos] from [Objective].

You can print the document more clearly although this takes longer to print than when [General] is selected.

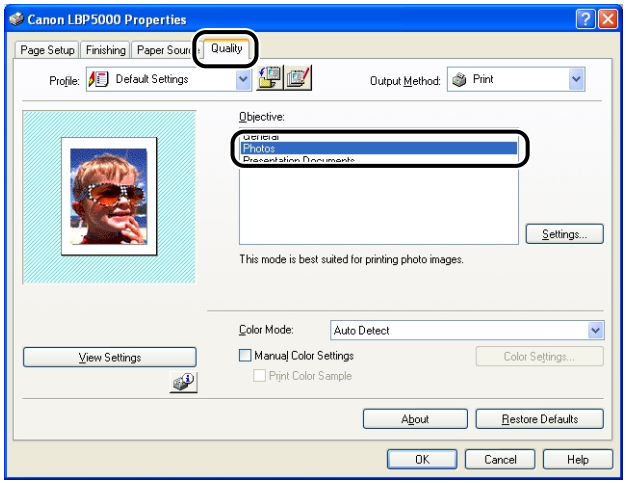

9 Click [OK].

The [Print] dialog box reappears.

10 Click [OK].

The printer starts printing.

NOTE

- If you have any problems with printing, see "Chapter 7 Troubleshooting".
- "Using the Various Printing Functions" (See p. 4-19) describes how to use the various functions of the printer and printer driver. By specifying the settings for the printer and printer driver for each job, you can make the best use of the printer and its functions.

Specifying the Printing Preferences

The CAPT software for LBP5000 allows you to specify various printing preferences.

To specify the printing preferences, first display the [Printer Properties] dialog box or the [Document Properties] dialog box. Perform any one of the following procedures that is suitable for your operating system to display the Properties dialog boxes.

For Windows 98/Me

If you display the [Document Properties] dialog box from an application, you can specify the settings only for the job.

If you display the [Printer Properties] dialog box from the [Printers] folder, you can specify various settings for the printer and default values for all jobs.

NOTE

The [Configuration] sheet that allows you to specify various settings for the printer can be displayed only by using the procedure described in "Displaying the [Printer Properties] Dialog Box from the [Printers] Folder" (See p. 4-11).

Displaying the [Document Properties] Dialog Box from an Application

This section describes the procedure, taking Adobe Reader 6.0 as an example.

1 **Select [Print] from the [File] menu in the application.**

NOTE

Printing procedures vary depending on the application you are using. For details on the printing procedures, see the instruction manual supplied with the application.

2 Select the name of this printer for [Name] or [Printer Name], and then click [Properties].

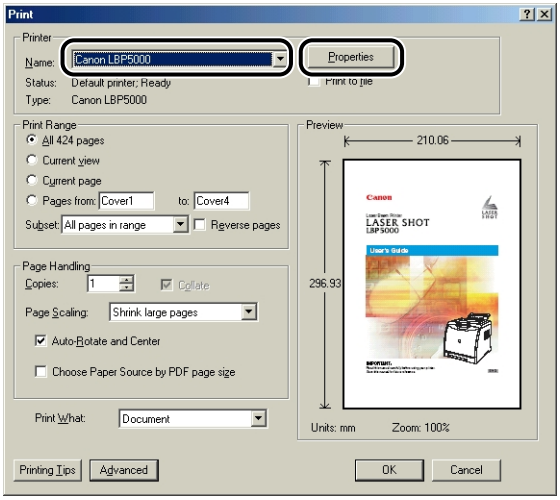

The [Document Properties] dialog box is displayed.

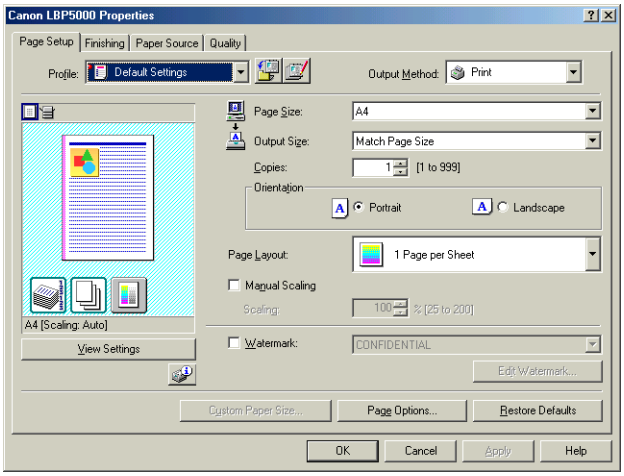

Displaying the [Printer Properties] Dialog Box from the [Printers] Folder

1 **From the [Start] menu, select [Settings] → [Printers].**

2 **Select the icon for this printer, then select [Properties] from the [File] menu.**

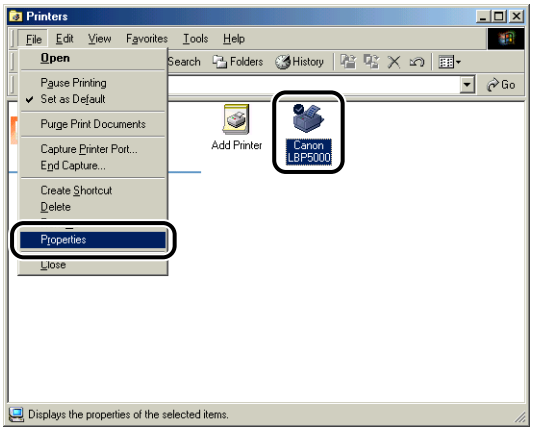

The [Printer Properties] dialog box is displayed.

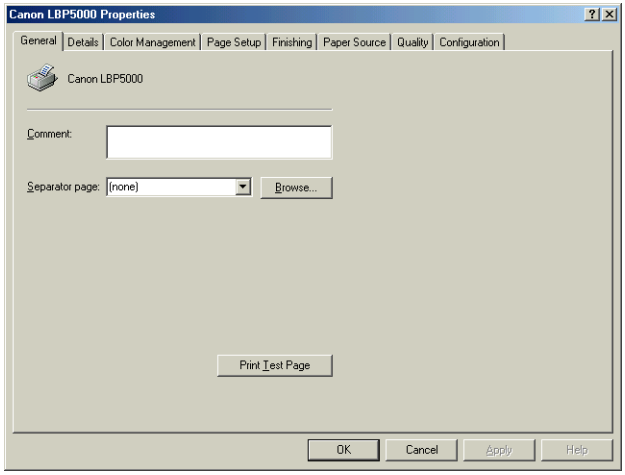

NOTE

The [Printer Properties] dialog box can also be displayed by right-clicking the icon for this printer and selecting [Properties] from the pop-up menu.

For Windows 2000/XP/Server 2003

If you display the [Document Properties] dialog box from an application, you can specify the settings only for the job.
If you display the [Document Properties] dialog box from the [Printers and Faxes] folder or the [Printers] folder, you can specify the default settings for all jobs.
If you display the [Printer Properties] dialog box from the [Printers and Faxes] folder or the [Printers] folder, you can specify various settings for the printer and add the frequently used options as "Profiles".

NOTE

- Full Control Permission is required to specify the settings for the [Printers and Faxes] folder or the [Printers] folder. If you cannot display the [Document Properties] dialog box from the [Printers and Faxes] folder or the [Printers] folder, display the dialog box from the application.
- The [Device Settings] sheet that allows you to specify various settings for the printer can be displayed only by using the procedure described in "Displaying the [Printer Properties] Dialog Box from the [Printers and Faxes] Folder or the [Printers] Folder" (See p. 4-15).

Displaying the [Document Properties] Dialog Box from an Application

This section describes the procedure, taking Adobe Reader 6.0 as an example.

1 **Select [Print] from the [File] menu in the application.**

NOTE

Printing procedures vary depending on the application you are using. For details on the printing procedures, see the instruction manual supplied with the application.

2 Confirm the printer name, then click [Properties].

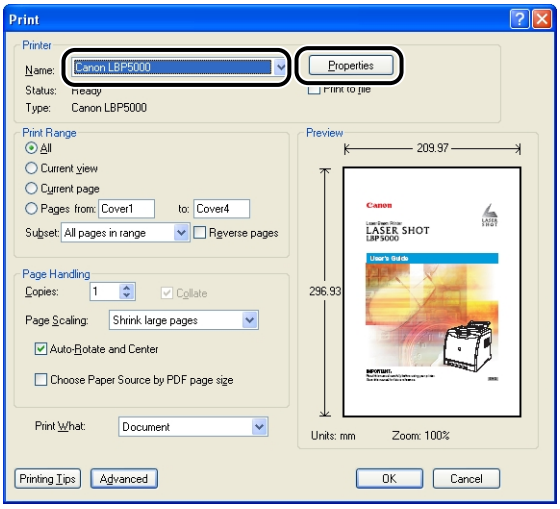

The [Document Properties] dialog box is displayed.

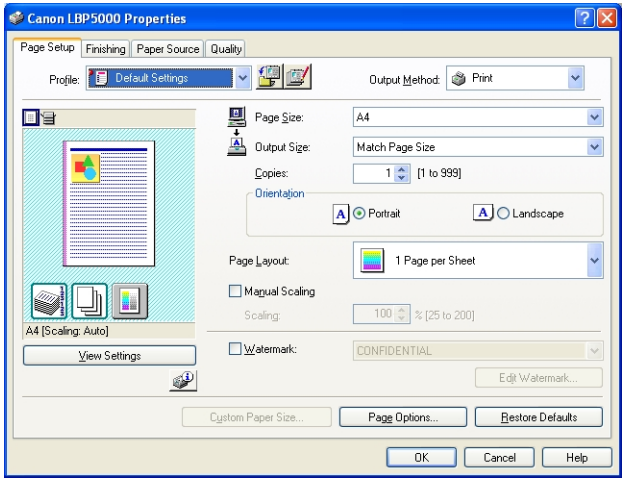

Displaying the [Document Properties] Dialog Box from the [Printers and Faxes] Folder or the [Printers] Folder

1 Display the [Printers and Faxes] folder or the [Printers] folder.

For Windows 2000: From the [Start] menu, select [Settings] → [Printers].
For Windows XP Professional/Server 2003: From the [Start] menu, select [Printers and Faxes].
For Windows XP Home Edition: From the [Start] menu, select [Control Panel], and then click [Printers and Other Hardware] → [Printers and Faxes].

2 Select the icon for this printer, then select [Printing Preferences] from the [File] menu.

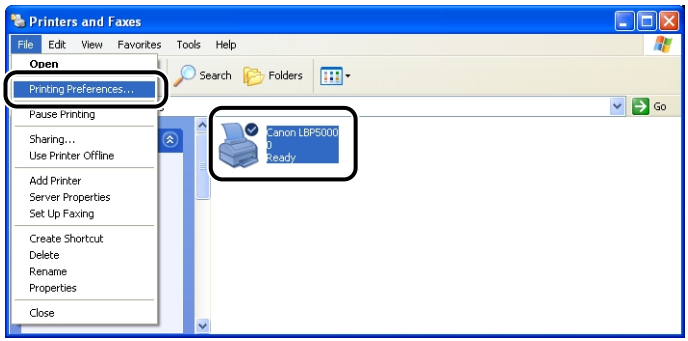

The [Document Properties] dialog box is displayed.

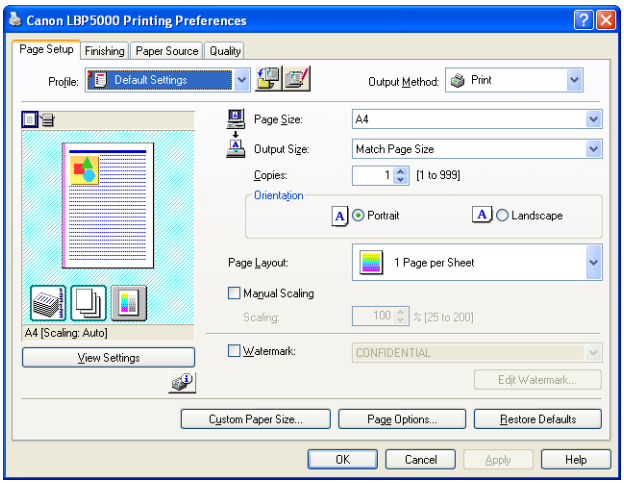

NOTE

The [Document Properties] dialog box can also be displayed by right-clicking the icon for this printer and selecting [Printing Preferences] from the pop-up menu.

Displaying the [Printer Properties] Dialog Box from the [Printers and Faxes] Folder or the [Printers] Folder

1 Display the [Printers and Faxes] folder or the [Printers] folder.

For Windows 2000: From the [Start] menu, select [Settings] → [Printers].
For Windows XP Professional/Server 2003: From the [Start] menu, select [Printers and Faxes].
For Windows XP Home Edition: From the [Start] menu, select [Control Panel], and then click [Printers and Other Hardware] → [Printers and Faxes].

2 Select the icon for this printer, then select [Properties] from the [File] menu.

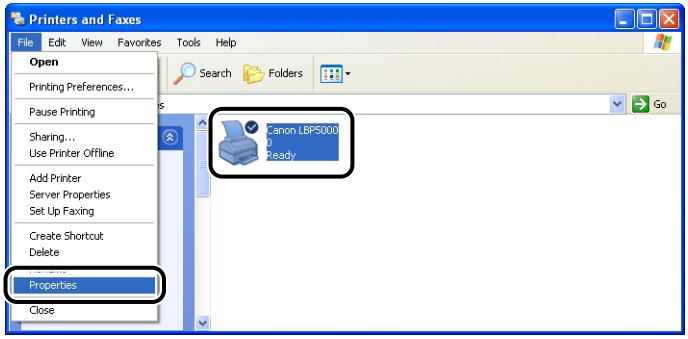

The [Printer Properties] dialog box is displayed.

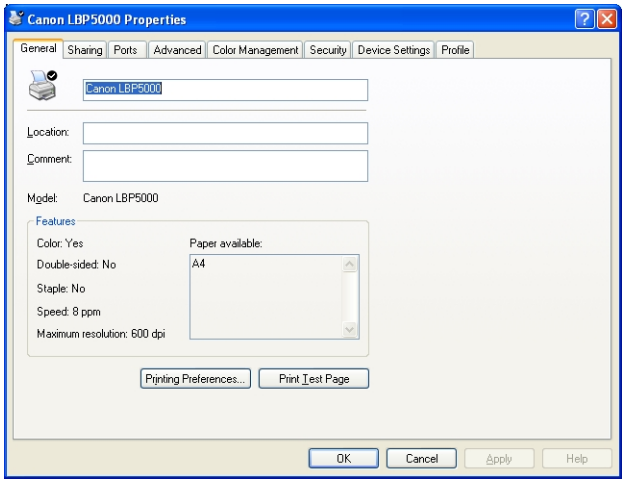

NOTE

The [Printer Properties] dialog box can also be displayed by right-clicking the icon for this printer and selecting [Properties] from the pop-up menu.

Deleting/Pausing/Resuming a Print Job

You can delete, pause, or resume a job in the Printer Status Window.

1 Start printing.

The Printer Status Window appears.

NOTE

The Printer Status Window may not appear depending on the settings for [Display Printer Status Window] in the [Preferences] menu in the Printer Status Window. (See "[Preferences] Menu," on p. 4-90)

2 When deleting or pausing the job, click the [Pause Job] button in the [Current Print Job] tab or [My Job Operation] tab.

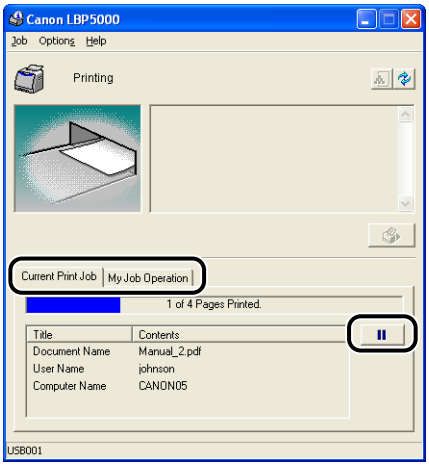

The following message is displayed and the [My Job Operation] tab is selected on the top by clicking the [Pause Job] button in the [Current Print Job] tab.

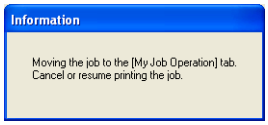

3 Click the button for the desired operation from among the [Job Operation] buttons.

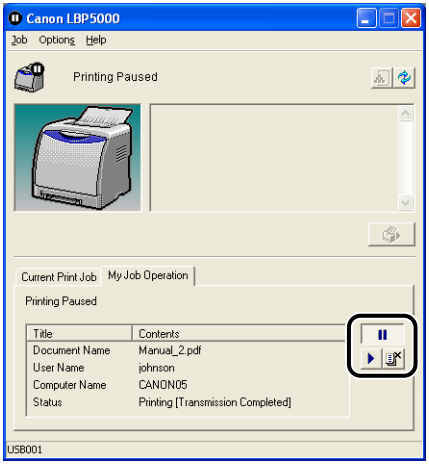

● Deleting a Job

❑ Click [ ] (Delete Job).

● Pausing a Job

❑ Click [ ] (Pause Job).

● Resuming the Job

❑ Click [ ] (Resume Job).

Using the Various Printing Functions

Utilizing a Variety of Options for Printing

You can print in a variety of ways by using the printer driver as follows.

■ Printing Multiple Pages on One Sheet (See p. 4-47)

Multiple pages can be printed on one sheet of paper.

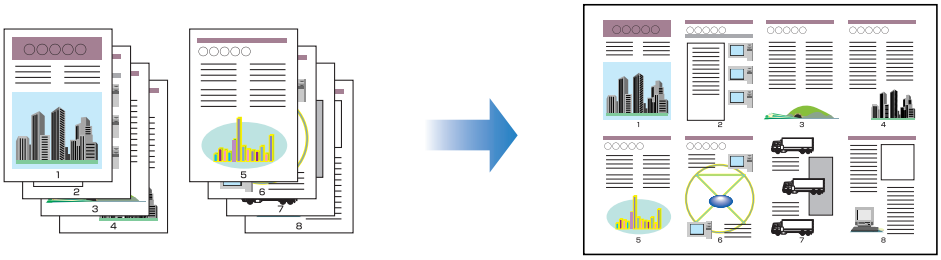

■ Scaling Print Output (See p. 4-49)

Specify this option when A4 size data is reduced in size and printed on B5 size paper, or B5 size data is enlarged and printed on A4 size paper. You can specify an arbitrary scaling.

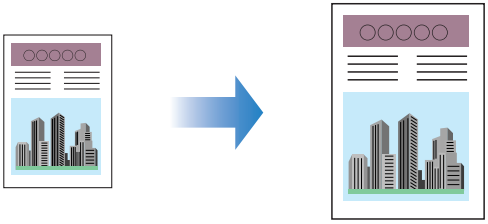

■ Poster Printing (See p. 4-51)

You can magnify a single page image and print it out on multiple sheets of paper. You can join these printouts together to make one large poster.

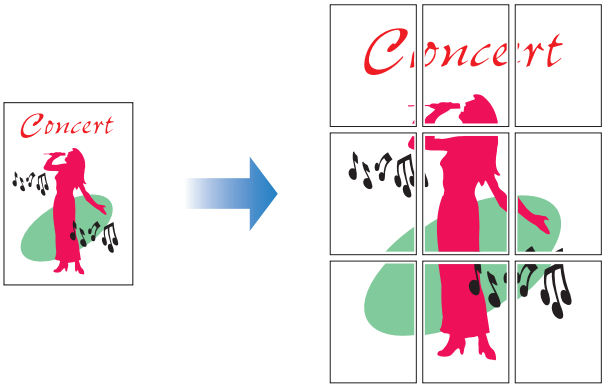

■ Watermark Printing (See p. 4-52)

You can superimpose watermarks (such as [COPY], [DRAFT], etc.) over the documents created by an application.

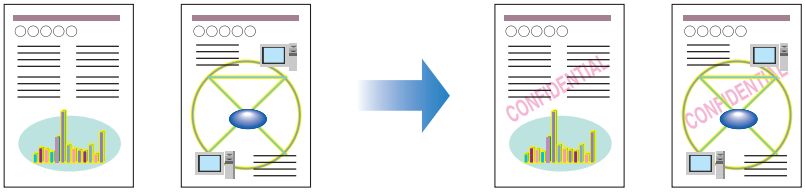

■ Printing Borders and Printing Date (See p. 4-54)

You can print with borders, printing date, and/or page numbers, etc.

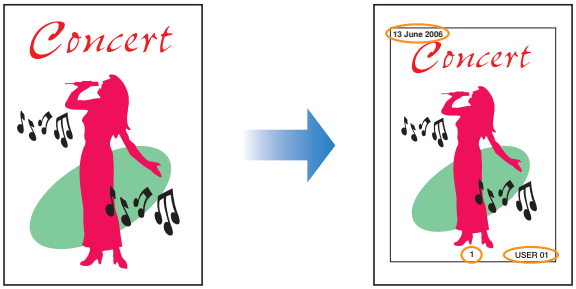

■ Printing with a Gutter (See p. 4-56)

You can specify a gutter on the printouts.

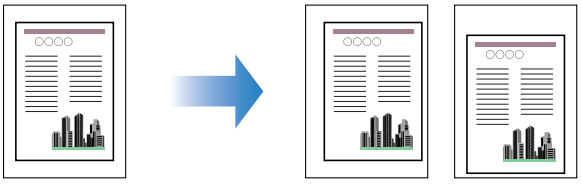

■ Specifying the Paper Output Method (See p. 4-57)

You can select a paper output method from the following options:

- [Off]
  Printouts of a complete job are grouped.
  For example, if you are printing three copies of a 3-page document, printouts of a complete job are grouped, arranged in this page order: 1, 1, 1, 2, 2, 2, 3, 3, 3.

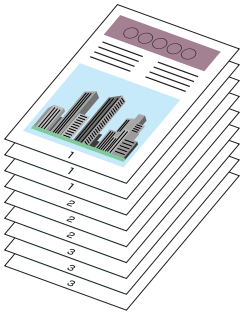

- [Collate]
  Printouts of a complete job are collated.
  For example, if you are printing three copies of a 3-page document, printouts of a complete job are collated, arranged in this page order: 1, 2, 3, 1, 2, 3, 1, 2, 3.

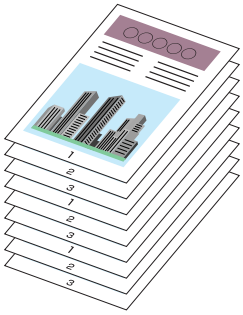

■ Print with Upper Left of Sheet as Starting Point (See p. 4-58)

Since printing is usually performed with the upper-left 5 mm (10 mm for envelopes) margin within the printable area of a sheet as the starting point, a certain portion (lower right) may be missing when printing data with no margin. In this case, you can print with the upper-left 0 mm margin as the starting point, and as a result, all sides of the sheet will be printed evenly.

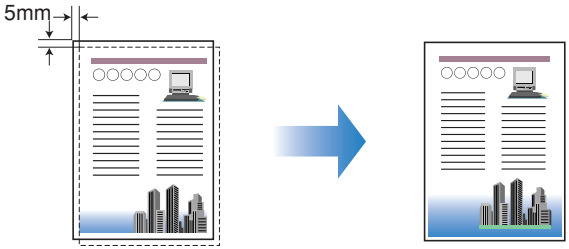

■ Printing with the Data 180 Degrees Rotated (See p. 4-59)

You can print with the image 180 degrees rotated. This option is useful for printing envelopes and Index Card size media that can be fed only in specific orientations.

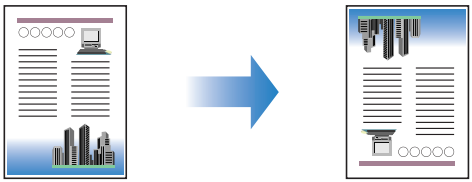

■ Smoothing Out Rough-Textured Images (See p. 4-61)

Specify this option when printing by smoothing out this kind of low-resolution image data.

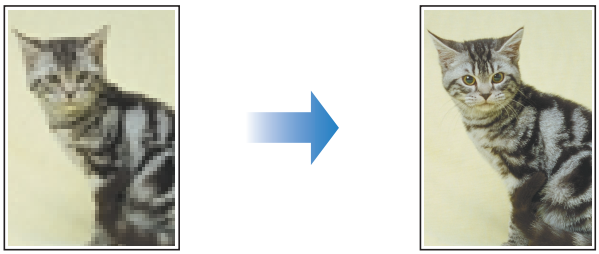

■ Printing with Toner Density Adjusted (See p. 4-62)

You can print with the toner density of each color (black, yellow, magenta, and cyan) adjusted.

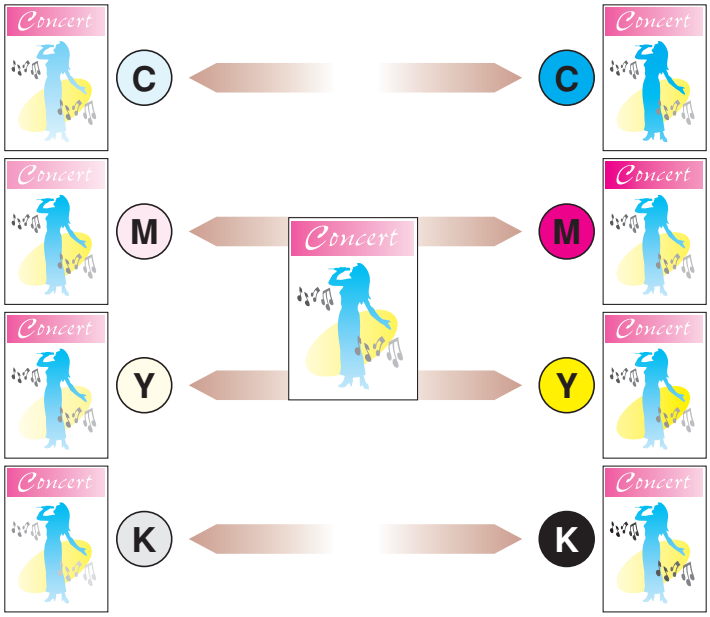

■ Color Settings (See p. 4-64)

You can perform color printing with the colors originally specified.

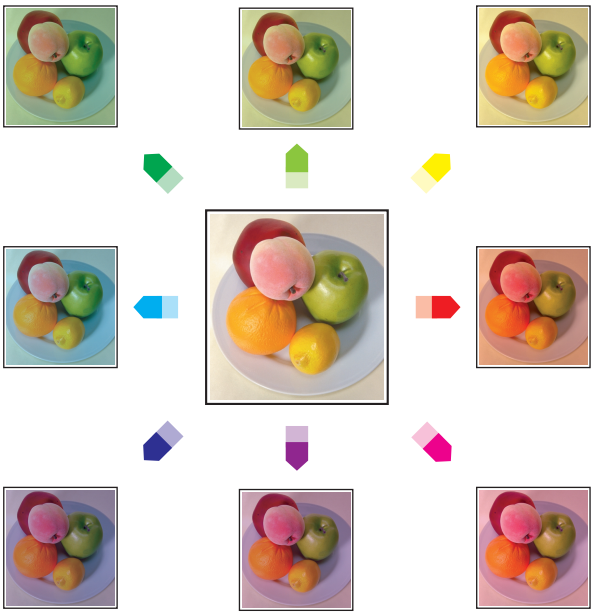

■ Specifying the Brightness and Contrast (See p. 4-66)

You can perform color printing with the brightness and contrast specified.

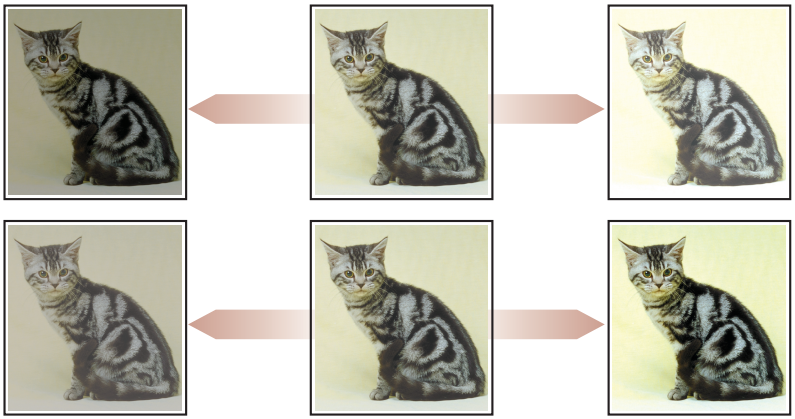

■ Printing a Color Sample (Windows 2000/XP/Server 2003 only) (See p. 4-68)

You can print an adjusted color sample after specifying the settings in the [Color Adjustment] sheet.

■ Editing Jobs with PageComposer (See p. 4-73)

You can combine two jobs into one and change the job settings for the combined job. You can edit a job in another application. You can also preview the job.

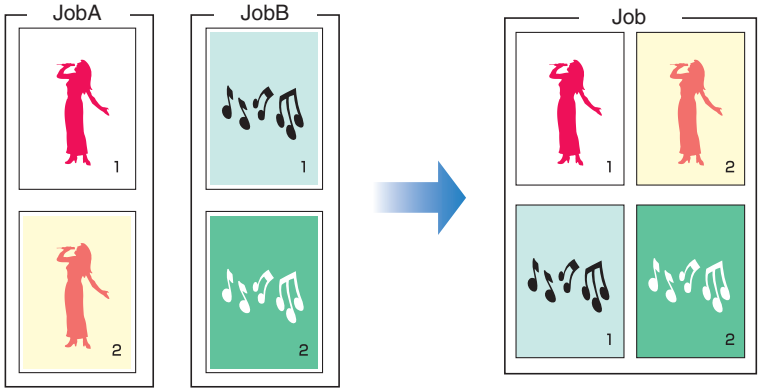

Various Pages in the Printer Driver

The [Printer Properties] dialog box and the [Document Properties] dialog box contain the following sheets that allow you to specify the various printing functions. You can switch among the sheets by clicking the tabs across the top of the dialog box.

This section describes the types of printing preferences that can be specified in each sheet.

■ For Windows 98/Me

- [Document Properties] Dialog Box
  - [Page Setup] Sheet
  - [Finishing] Sheet
  - [Paper Source] Sheet
  - [Quality] Sheet
- [Printer Properties] Dialog Box
  - [General] Sheet
  - [Details] Sheet
  - [Sharing] Sheet
  - [Color Management] Sheet
  - [Page Setup] Sheet
  - [Finishing] Sheet
  - [Paper Source] Sheet
  - [Quality] Sheet
  - [Configuration] Sheet

NOTE

The [General], [Details], [Sharing], and [Color Management] sheets in the [Printer Properties] dialog box are displayed by Windows. For details on these sheets, see Windows Help.

■ For Windows 2000/XP/Server 2003

- [Document Properties] Dialog Box
  - [Page Setup] Sheet
  - [Finishing] Sheet
  - [Paper Source] Sheet
  - [Quality] Sheet
- [Printer Properties] Dialog Box
  - [General] Sheet
  - [Sharing] Sheet
  - [Ports] Sheet
  - [Advanced] Sheet
  - [Color Management] Sheet
  - [Security] Sheet
  - [Device Settings] Sheet
  - [Profile] Sheet

NOTE

The [General], [Sharing], [Ports], [Advanced], [Color Management], [Security] sheets in the [Printer Properties] dialog box are displayed by Windows. For details on these sheets, see Windows Help.

[Page Setup] Sheet

The [Page Setup] sheet allows you to specify the following printing preferences:

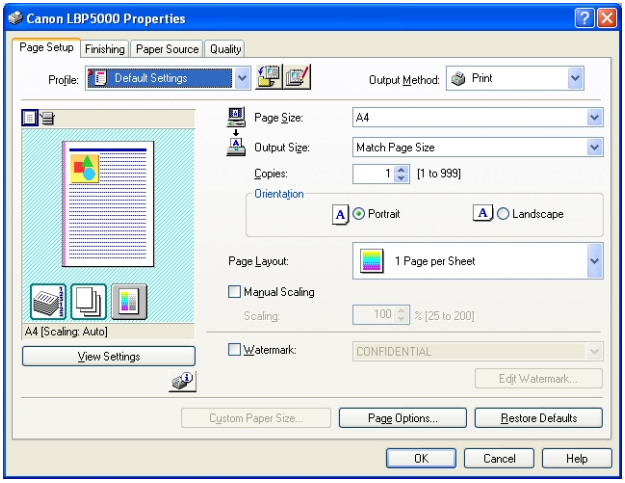

Setting/Button	Contents
[Page Size]	You can select the paper size of the document created by an application.
[Output Size]	You can specify the actual paper size to be printed.
[Copies]	You can specify the number of copies to be printed.
[Orientation]	You can specify the printing orientation.
[Page Layout] (See p. 4-47)	- [N Pages per Sheet] (N=1, 2, 4, 6, 8, 9, 16) Prints multiple pages on one sheet of paper. Some applications provide a function to print a document as a collated set of copies. Do not use this function with [N Pages per Sheet]. - [Poster [N x N]] (N = 2, 3, 4) Magnifies a single page image and print it out on multiple sheets of paper. You can join these printouts together to make one large poster.
[Page Order]	You can specify the page order layout for printing when [Page Layout] is set to [N Pages per Sheet] (N = 2, 4, 6, 8, 9, 16).
[Manual Scaling] (See p. 4-50)	Selecting this check box allows you to enter the value for scaling the printed document manually.

Setting/Button	Contents
[Watermark] (See p. 4-52)	You can superimpose watermarks (such as [COPY], [DRAFT], etc.) over the documents created by an application. Select the check box for this option and select a watermark to print with the document. Select the watermark from the drop-down list on the right.
[Edit Watermark] (See p. 4-53)	Displays a dialog box for modifying the added watermarks.
[Custom Paper Size]	Displays a dialog box for specifying custom paper sizes.
[Page Options] (See p. 4-54)	Allows you to print printing date, user name, page numbers, or a border.

■ [Custom Paper Size Settings] Dialog Box

The following dialog box is displayed by clicking [Custom Paper Size].

This dialog box allows you to specify the height and width of custom paper size, which is different from the standard paper sizes.

On Windows 98/Me, up to 30 custom paper sizes can be added. On Windows 2000/XP/Server 2003, the number depends on the system environment.

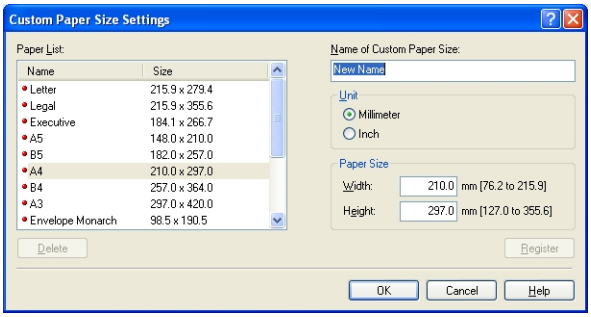

Setting/Button	Contents
[Paper List]	Displays [Name] and [Size] of standard paper sizes and added custom paper sizes. The paper sizes with a small red mark placed at the left side of the name are standard paper sizes and [Custom [Name Fixed]]. These standard paper sizes and [Custom [Name Fixed]] cannot be deleted.
[Name of Custom Paper Size]	You can enter the name of the custom paper size to be added.
[Unit]	Specify the unit ([Millimeter] or [Inch]) to be used when setting the custom paper size.

Setting/Button	Contents
[Paper Size]	Specify the height and width of the custom paper size ([Height] ≧ [Width]). Specify the custom paper size in portrait orientation ([Height] ≧ [Width]) within user-definable sizes.
[Delete]	Deletes the custom paper size selected in [Paper List]. However, you cannot delete the default standard paper sizes and [Custom [Name Fixed]].
[Register]	Registers custom paper sizes.

■ [Edit Watermark] Dialog Box (See p. 4-53)

The following dialog box is displayed by clicking [Edit Watermark].

This dialog box allows you to add new watermarks and edit the added watermarks.

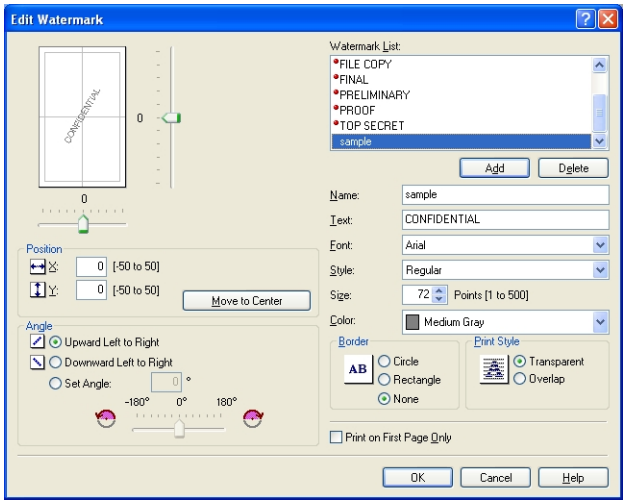

Setting/Button	Contents
[Position]	You can specify the position to print the selected watermark on the document. Enter X and Y axis values between -50 and 50 (The center of the paper is defined as 0 (zero)). Alternatively, drag the sliders on the bottom and the right of Preview to specify the position.
[Move to Center]	Moves the watermark to the center of the document.
[Angle]	You can specify the angle to print the selected watermark on the document (The horizontal position is defined as 0 (zero)).

Setting/Button	Contents
[Watermark List]	Displays a list of registered watermarks. The watermarks with a small red mark placed at the left side of the name are provided by default. These provided watermarks cannot be deleted.
[Add]	Allows you to add and specify a new watermark in the [Edit Watermark] dialog box (Up to 50 watermarks can be added).
[Delete]	Deletes the watermark selected in [Watermark List]. However, you cannot delete the default watermarks.
[Name]	You can enter the name for the added watermark to be displayed in [Watermark] in the [Page Setup] sheet.
[Text]	Enter the characters to be printed as a watermark.
[Font]	Select the font to be used for the watermark (True Type fonts only).
[Style]	Select the font style for the watermark.
[Size]	Specify the font size for the watermark.
[Color]	Specify the color for the watermark.
[Border]	Specify whether a border encloses the watermark when printed.
[Print Style]	Select the watermark type from [Transparent] or [Overlap].
[Print on First Page Only]	Select this check box when printing the watermark only on the first page of the document.

■ [Page Options] Dialog Box (See p. 4-54)

The following dialog box is displayed by clicking [Page Options].
This dialog box allows you to specify borders, date, and page numbers, etc. to be printed on the printouts.

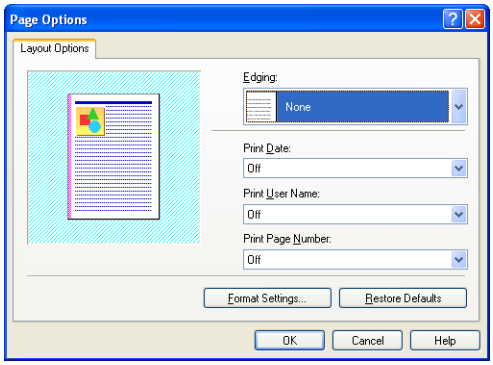

Setting/Button	Contents
[Edging]	You can select the type of edging to print as a border. When a border is applied, the original print data will be reduced slightly in size to make room for the border.
[Print Date]	You can print the date.
[Print User Name]	You can print a user name that is registered in the computer.
[Print Page Number]	You can print page numbers.
[Format Settings]	Displays a dialog box for specifying the font for printing date and page number.

■ [Format Settings] Dialog Box

The following dialog box is displayed by clicking [Format Settings] in the [Page Options] dialog box.
This dialog box allows you to specify the font for printing date and page number.

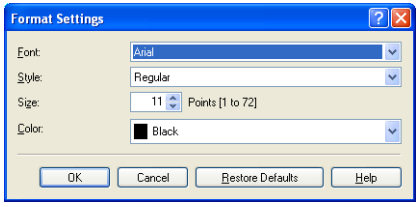

Setting/Button	Contents
[Font]	Select the font to be used (True Type fonts only).
[Style]	Select the font style to be used.
[Size]	Specify the font size to be used.
[Color]	Select the color to be used.

[Finishing] Sheet

The [Finishing] sheet allows you to specify the following printing preferences:

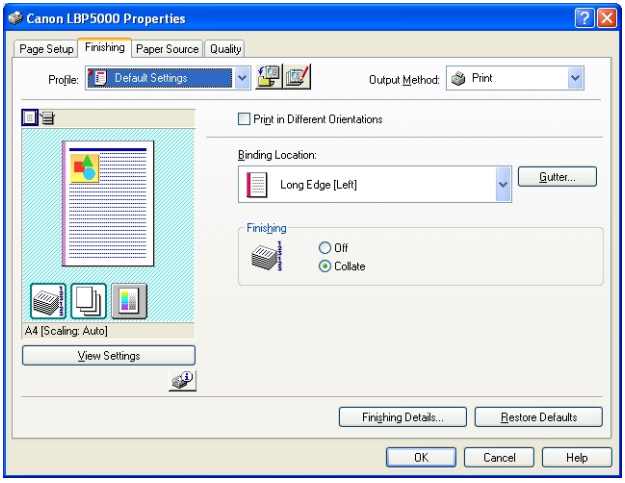

Setting/Button	Contents
[Print in Different Orientations]	When there are data of different orientations in a job, select the [Print in Different Orientations] check box and specify the settings for [Paper Alignment] or [Gutter]. Click [Details] to specify the settings.
[Details] ([Finishing] Sheet)	Displays a dialog box for detailed settings for [Paper Alignment].
[Paper Alignment]	Displays the settings specified in the [Detailed Settings] dialog box.
[Binding Location] (See p. 4-56)	You can specify which edge of the printed paper is to be bound.
[Gutter] (See p. 4-56)	Specifies the gutter width when binding the printouts.
[Finishing] (See p. 4-57)	Specify the paper output method.

Setting/Button	Contents
[Finishing Details]	Displays the [Finishing Details] dialog box for specifying the finishing details and print mode appropriate to the paper.

■ [Detailed Settings] Dialog Box

The following dialog box is displayed by selecting the [Print in Different Orientations] check box and clicking [Details].
This dialog box allows you to specify [Paper Alignment] on output when printing a document of mixed paper sizes or orientations.

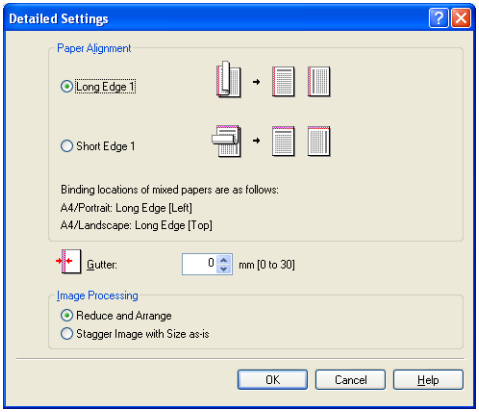

Setting/Button	Contents
[Paper Alignment]	You can select the pattern of [Paper Alignment] when printing in different orientations.
[Gutter]	When a value is specified, a margin of white space is created on one side of the printed paper (This margin is called [Gutter]). The gutter is useful when binding pages. Valid values for [Gutter] range from 0 to 30 mm.
[Image Processing]	When [Gutter] is specified, the position of the page image is adjusted to make room for the gutter. At this point, you can select whether to reduce the size of the image to fit the remaining space.

■ [Gutter Settings] Dialog Box (See p. 4-56)

The following dialog box is displayed by clicking [Gutter].

This dialog box allows you to specify the width of the gutter and image processing method.

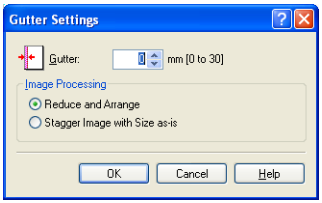

Setting/Button	Contents
[Gutter]	When a value is specified, a margin of white space is created on one side of the printed paper (This margin is called [Gutter]). The gutter is useful when binding pages. Valid values for [Gutter] range from 0 to 30 mm.
[Image Processing]	When [Gutter] is specified, the position of the page image is adjusted to make room for the gutter. At this point, you can select whether to reduce the size of the image to fit the remaining space.

■ [Finishing Details] Dialog Box

The following dialog box is displayed by clicking [Finishing Details].

This dialog box allows you to specify various settings for print processing.

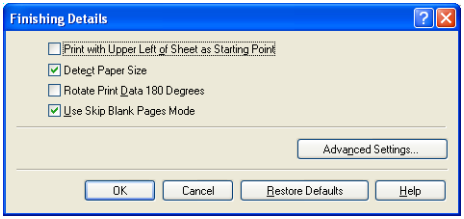

Setting/Button	Contents
[Print with Upper Left of Sheet as Starting Point] (See p. 4-58)	Since printing is usually performed with the upper-left 5 mm (10 mm for envelopes) margin within the printable area of a sheet as the starting point, a certain portion (lower right) may be missing when printing data with no margin. When this check box is selected, printing is performed with the upper-left 0 mm margin of sheet as the starting point.

Setting/Button	Contents
[Detect Paper Size]*	This option detects the paper size and allows you to specify whether to pause a print job temporarily when [Paper Source] in the [Paper Source] sheet is set to [Cassette 1] or [Cassette 2] (the optional paper feeder). If the check box for this option is selected, a message is displayed, and the job is paused when the paper size specified in [Output Size] in the [Page Setup] sheet is different from the paper size specified in the [Register Paper Size in Cassettes] dialog box in the Printer Status Window. When printing on paper of the size specified in [Output Size], load the appropriate paper in the paper cassette and specify the appropriate paper size in the [Register Paper Size in Cassettes] dialog box. When printing the currently loaded paper, click the [Resolve Error] button. If the check box for this option is cleared, no message appears, and the job uses the currently loaded paper even when the settings for the paper size are different from each other. Whenever [Paper Source] is set to [Manual Feed Slot], the paper loaded in the manual feed slot is used for printing regardless of the setting for this option.
[Rotate Print Data 180 Degrees] (See p. 4-59)	Prints with the image 180 degrees rotated. This option is useful for printing envelopes and Index Card size media that can be fed only in specific orientations.
[Use Skip Blank Pages Mode]	When the check box for this option is selected, blank paper is not output if the job includes blank pages.
[Advanced Settings]	When you want to solve the problems of the print quality, click this button and specify the settings in the [Advanced Settings] dialog box. If you are using Windows 2000/XP/Server 2003, you can also specify whether the print data is spooled in EMF (meta file) format.

* If [Paper Source] is set to [Auto], perform the following procedure regardless of the setting for this option.
Whenever the setting for [Output Size] is different from the paper size specified in the [Register Paper Size in Cassettes] dialog box, the paper loaded in the manual feed slot is used for printing.
If there is no paper in the manual feed slot, load the appropriate paper in the paper cassette and specify the appropriate paper size in the [Register Paper Size in Cassettes] dialog box, or load paper in the manual feed slot.

■ [Advanced Settings] Dialog Box

The following dialog box is displayed by clicking [Advanced Settings] in the [Finishing Details] dialog box.

This dialog box allows you to specify the finishing details.

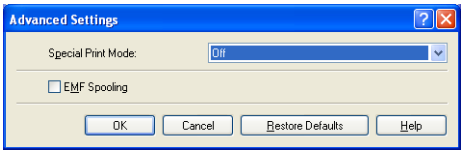

Setting/Button	Contents
[Special Print Mode]	Print quality may deteriorate depending on the type of paper being used or the operating environment of the printer. [Special Print Mode] provides a number of settings for solving problems related to printing quality.
[EMF Spooling] (Windows 2000/ XP/Server 2003 only)	Specify whether the print data is spooled in EMF (meta file) format.

[Paper Source] Sheet

The [Paper Source] sheet allows you to specify the following printing preferences:

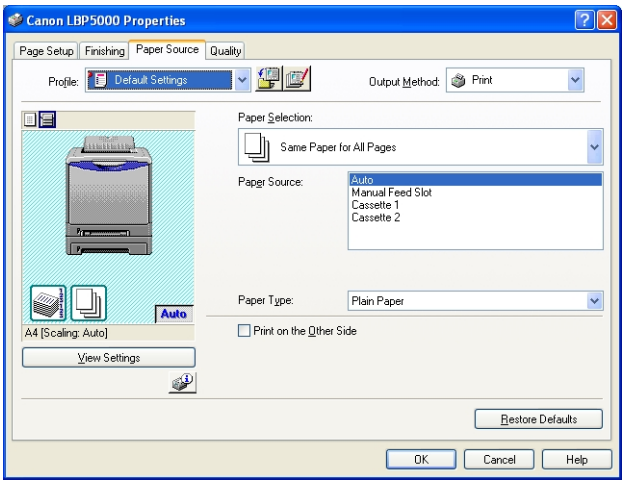

Setting/Button	Contents
[Paper Selection]	Specify the paper feed method.

Setting/Button	Contents
[Paper Source]	Specify paper source or paper type according to the settings selected in [Paper Selection]. - [Auto] Automatically selects the paper source according to the size or type of paper. - [Manual Feed Slot] /[Cassette 1]/ [Cassette 2] (Displayed only when the optional paper feeder is installed) Feeds paper from the selected paper source. The following types of paper can be loaded in each paper source. - Plain Paper (60 - 90 g/m^2) - Heavy Paper (91 - 163 g/m^2) - Envelope - Label - Transparency
[Paper Type]	You can specify the type of paper. (See p. 2-3)
[Print on the Other Side]	It is not recommended to print the other side of previously printed paper. However, if you have to print on both sides of paper, select the [Print on the Other Side] check box when printing the other side of the previously printed paper.

[Quality] Sheet

The [Quality] sheet allows you to specify the following printing preferences:

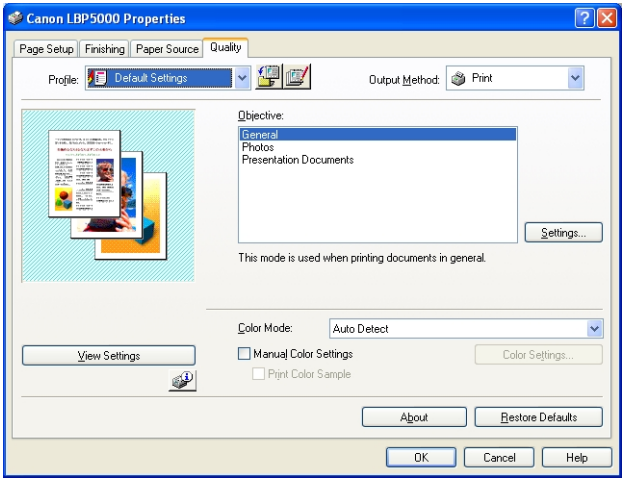

Setting/Button	Contents
[Objective]	Selecting the appropriate mode from [Objective] for the contents of the document allows you to perform optimum printing. Selecting each option in [Objective] displays a comment on the option under the list. To change the printing preferences selected in [Objective] to meet your needs, click [Settings].
[Settings]	Allows you to change the printing preferences in the [Custom Settings] dialog box.
[Color Mode]	Specifies whether to perform color printing or black and white printing.
[Manual Color Settings] (See p. 4-64)	Select this check box when customizing colors. To specify the colors in detail, click [Color Settings] to display the [Color Settings] dialog box.
[Color Settings] (See p. 4-64)	After selecting the [Manual Color Settings] check box, click this button to customize colors.
[Print Color Sample] (Windows 2000/XP/Server 2003 only) (See p. 4-68)	If this check box is selected, you can print an adjusted color sample after specifying the settings in the [Color Adjustment] sheet that is displayed when [Color Settings] is clicked. [Preview] is printed in the center of the paper, and this is surrounded by images where the color tone is changed by 1 unit in each of the corresponding directions.

■ [Custom Settings] Dialog Box

The following dialog box is displayed by clicking [Settings].

This dialog box allows you to change the printing preferences.

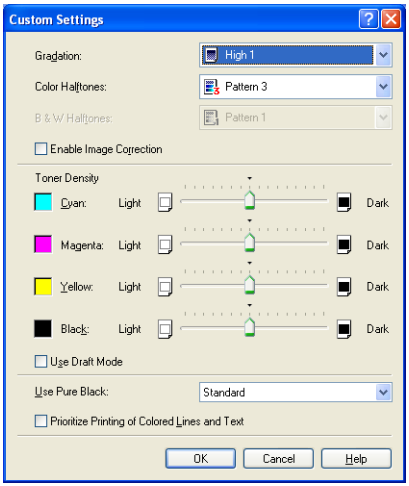

Setting/Button	Contents
[Gradation]	Allows you to specify the gradation when printing images in halftones.
[Color Halftones]	Allows you to select a dither pattern to use when printing data in color halftones.
[B & W Halftones]	Allows you to select a dither pattern to use when printing data in monochrome halftones.
[Enable Image Correction] (See p. 4-61)	When image data such as photographic images are enlarged in size in an application and printed, the printed images can look rough or jagged. Specify this option when printing by smoothing out this kind of low-resolution image data.
[Toner Density] (See p. 4-62)	Adjusts the toner density for the print data.
[Use Draft Mode]*	The draft mode is used to print a test page. By using the draft mode, you can print by thinning out the print data.
[Use Pure Black]	Specifies whether to perform gray compensation. Gray compensation makes black and gray data print reliably in black and gray. Select the subject of gray compensation from the list.
[Prioritize Printing of Colored Lines and Text]	Select the check box for this option when color lines or text appear patchy or broken. You should be able to print thin lines finely.

* Using the draft mode may decrease print density, making printed text look patchy.
-When printing without using the draft mode -When printing using the draft mode

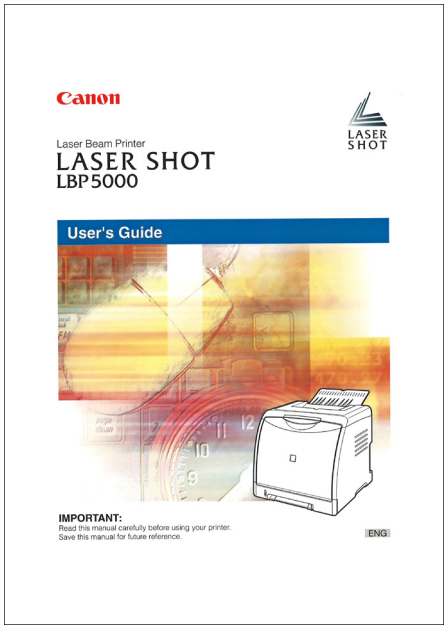

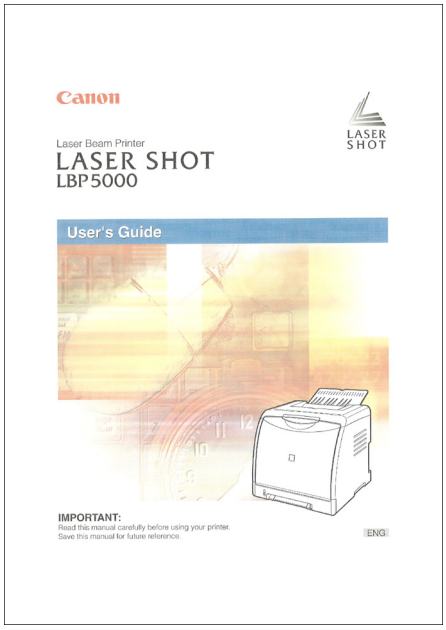

■ [Color Settings] Dialog Box

The following dialog box is displayed by clicking [Color Settings].

This dialog box has the [Color Adjustment] sheet and the [Matching] sheet.

- [Color Adjustment] Sheet
  This sheet allows you to adjust color, brightness, and contrast for printing.

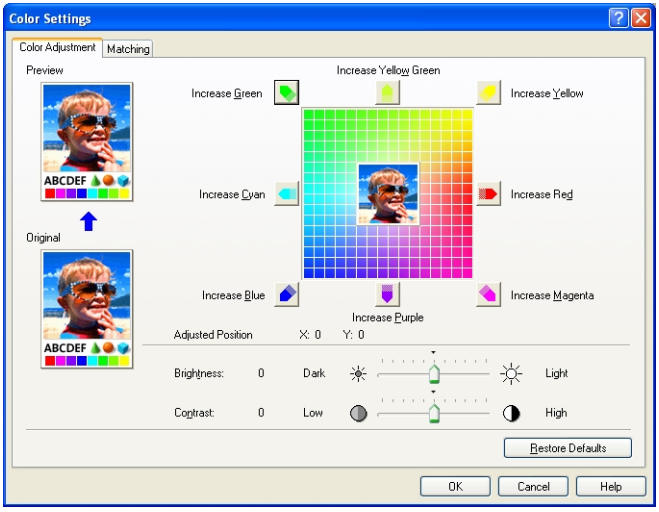

Setting/Button	Contents
[Preview]	Displays a sample image after adjustment.
[Original]	Displays a sample of the original image before adjustment.
[Adjustment Grid] (See p. 4-64)	Adjust the colors by moving the [Preview Image] at the center of [Adjustment Grid] from side to side or up and down.
[Adjusted Position]	[Adjusted Position] shows the X (horizontal) and Y (vertical) position of [Preview Image] after adjustment.
[Brightness] (See p. 4-66)	You can adjust the brightness for the print data.
[Contrast] (See p. 4-66)	You can adjust the contrast for the print data.

- [Matching] Sheet
  This sheet allows you to specify the method for color correction for printing.
  If you do not perform color correction, specify the setting for [Gamma].
  Also, if you are using Windows 2000/XP/Server 2003, you can print using CanoFine.

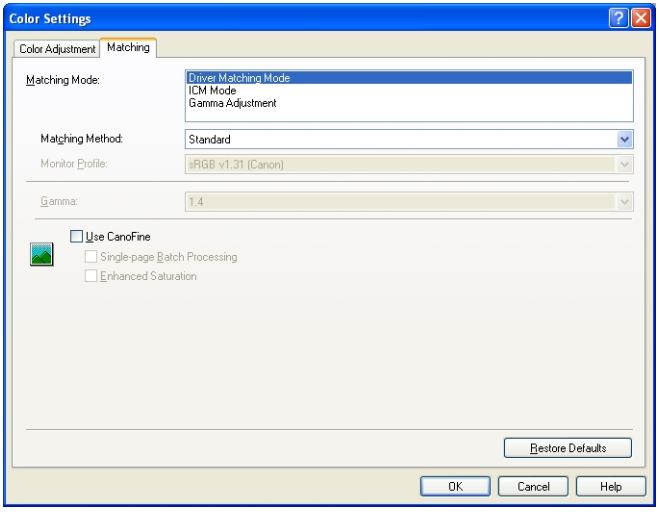

Setting/Button	Contents
[Matching Mode]	You can specify the method for color correction.
[Matching Method]	You can specify which element is to be prioritized in matching.
[Monitor Profile]	You can select the appropriate option (the profiles registered in your computer are displayed) for the monitor or scanner in use.

Setting/Button	Contents
[Gamma]	When [Matching Mode] is set to [Gamma Adjustment], color is adjusted by brightness without performing matching. In [Gamma], you can adjust the brightness of the printout results without spoiling the lightest parts and darkest parts. Apply this option when printed colors in the printed paper are lighter than those in the original image (such as photographs that have not yet been scanned, diagrams, charts, or graphics created on the monitor) or when you want to change the brightness of colors.
[Use CanoFine] (Windows 2000/XP/Server 2003 only)	Select this option when using CanoFine. CanoFine is the function that is used to print bitmap data finely, correcting it automatically. The images shot by a digital camera are printed finely by using this option.
[Single-page Batch Processing] (Windows 2000/XP/Server 2003 only)	Performs CanoFine processing by treating all of the bitmap data in one page as a single piece of data. When the check box for this option is selected, revolved or cut-out bitmap data may be printed clearly.
[Enhanced Saturation] (Windows 2000/XP/Server 2003 only)	Performs CanoFine processing by enhancing the vividness of the colors.

[Configuration]/[Device Settings] Sheet

The [Configuration]/[Device Settings] sheet allows you to specify the paper source options, when to display the Printer Status Window, and others.

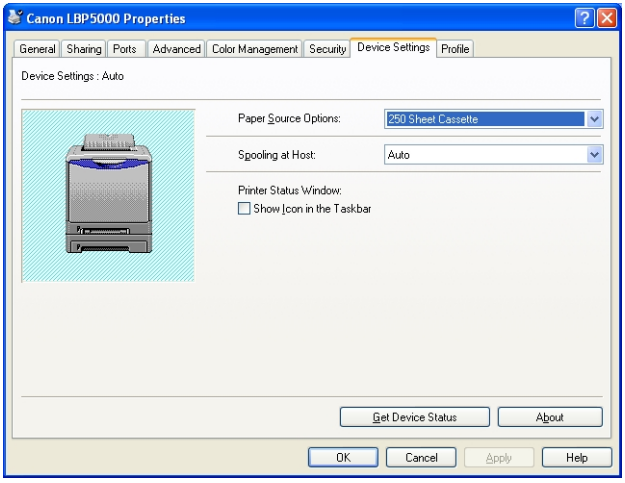

Setting/Button	Contents
[Paper Source Options]	You can select the paper source options when they are installed in the printer.
[Spooling at Host] (Windows 2000/XP/Server 2003 only)	You can specify whether [Spooling at Host] is performed in the computer (whether the jobs are processed in the computer). When [Spooling at Host] is not performed in the computer, some options become disabled. You can select either [Auto] or [Disabled]. When [Auto] is selected, the spooling status is automatically determined by the printer settings.
[Show Icon in the Taskbar]	When this check box is selected, an icon for displaying the Printer Status Window appears in the taskbar on the lower right of the screen. To display the Printer Status Window, click the icon in the taskbar, then click [Canon LBP5000].
[Get Device Status]	Automatically obtains the printer status of the paper source options from the printer and reflects it in the printer driver settings.

[Profile] Sheet (Windows 2000/XP/Server 2003 only)

This sheet allows you to add new "Profiles" and edit the previously registered "Profiles".

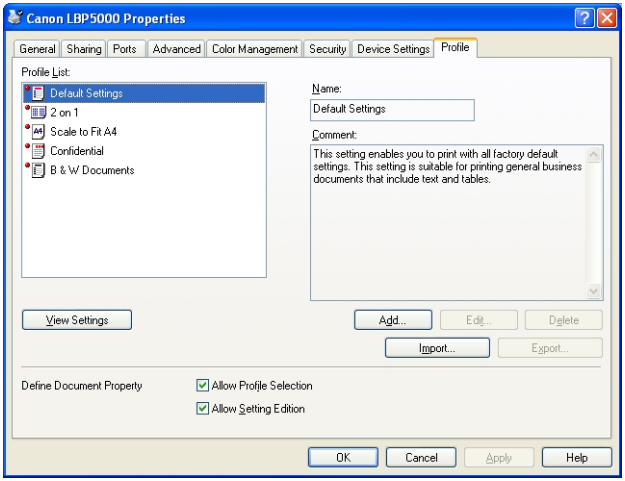

Setting/Button	Contents
[Profile List]	Lists the available "Profiles".
[Name]	Displays the name of the "Profile" selected in [Profile List].
[Comment]	Displays a comment about the "Profile" selected in [Profile List].
[View Settings]	Displays the [View Settings] dialog box. You can view and confirm all of the current page settings.
[Add]	Displays the [Add/Edit Profile] dialog box and allows you to add a new "Profile".
[Edit]	Selecting the desired "Profiles" in [Profile List] and clicking this button display the [Add/Edit Profile] dialog box and allow you to change [Name], [Icon], [Comment], and the settings for the added "Profile". However, you cannot edit the default "Profiles".
[Delete]	Deletes the selected "Profile" from [Profile List]. However, you cannot delete the default "Profiles".
[Import]	Imports a "Profile" saved as a file and adds it to [Profile List].

Setting/Button	Contents
[Export]	Saves the selected "Profile" in [Profile List] as a file. However, you cannot save the default "Profiles".
[Define Document Property]	By using the two check boxes, specify the operations of "Profiles" that will be permitted in the [Document Properties] dialog box.
[Allow Profile Selection]	When the check box for this option is selected, you can select a "Profile" in the [Document Properties] dialog box. Clear the check box for this option to disable selection of a "Profile" in the [Document Properties] dialog box.
[Allow Setting Edition]	When this check box is selected, you can add a new "Profile" setting that is different from the default "Profiles" in the [Document Properties] dialog box.

■ [Add/Edit Profile] Dialog Box

The following dialog box is displayed by clicking [Add] or [Edit].

This dialog box allows you to enter [Name], [Icon], [Comment], and the printing preferences for the newly added "Profile" or the one that you want to edit.

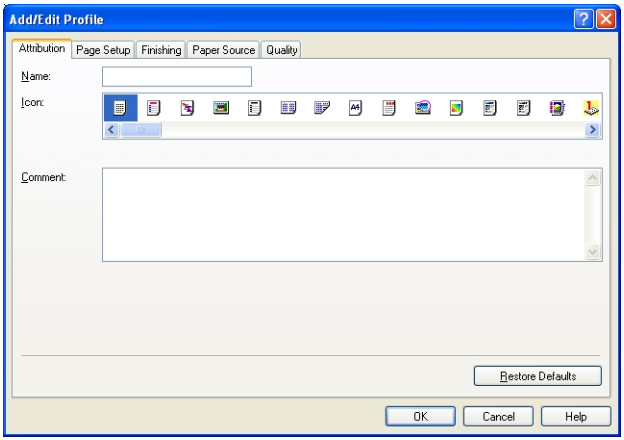

Setting/Button	Contents
[Name]	You can enter the name for the "Profile" to be added.
[Icon]	You can select the icon for the "Profile" to be added.
[Comment]	You can enter the comment for the "Profile" to be added.

Preview

The current settings is displayed on Preview in the [Page Setup] sheet, the [Paper Source] sheet, and the [Finishing] sheet. You can specify the settings for [Binding Location], [Page Layout], [Finishing] and others by clicking Preview.

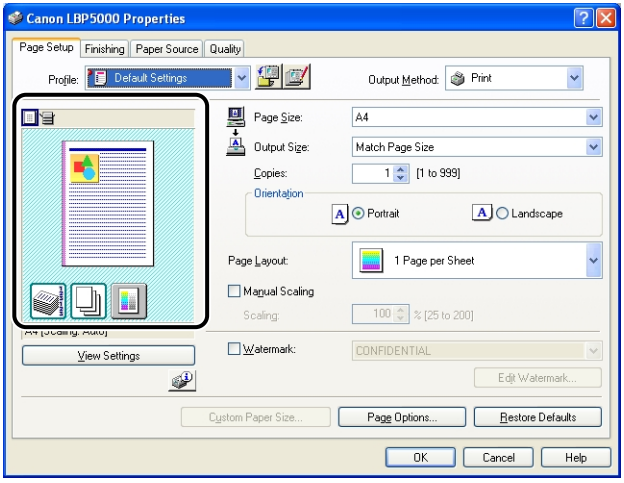

Depending on which icon on the upper left on Preview (or) is selected, the operating procedure of Preview differs as follows:

■ When is selected

You can specify [Binding Location], [Page Layout], and [Color Mode].

Left-clicking the edge of the document image allows you to specify [Binding Location].

The setting for [Page Layout] changes successively among [1 Page per Sheet], [2 Pages per Sheet], and [4 Pages per Sheet] by repeatedly left-clicking within the document image.

Right-clicking on Preview selects [1 Page per Sheet], [2 Pages per Sheet], [4 Pages per Sheet], [Black and White], [Color], or [Auto Detect].

The meanings of the icons on the lower right on Preview are as follows:

Icon	Meaning
	You can switch among [Auto Detect], [Black and White], and [Color].

■ **When is selected**

You can specify the paper source and [Finishing].

Left-clicking the paper source image (manual feed slot or paper cassette image) on Preview specifies the paper source. If you want to switch the paper source automatically according to the size or type of paper, left-click [Auto] on the lower right on Preview.

Also, right-clicking on Preview specifies [Finishing].

If [Paper Selection] is set to [Different for First, Others, and Last] or [Different for First, Second, Others, and Last], you can specify the paper source for each page.

Printing Multiple Pages on One Sheet

Multiple pages can be printed on one sheet of paper.

1 **If you are using Windows 2000/XP/Server 2003, display the [Device Settings] sheet, and then make sure that [Spooling at Host] is set to [Auto].**

2 **Display the [Page Setup] sheet, then select the number of the pages to be printed on one sheet from [Page Layout].**

The number of pages that can be selected is 1, 2, 4, 6, 8, 9, or 16 (Pages per Sheet).

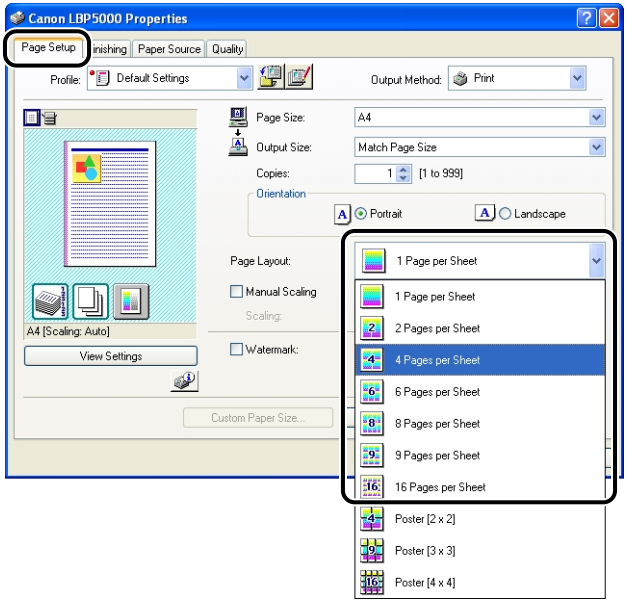

3 When [Page Layout] is set to 2, 4, 6, 8, 9, or 16 (Pages per Sheet), [Page Order] appears. Specify how the pages are aligned.

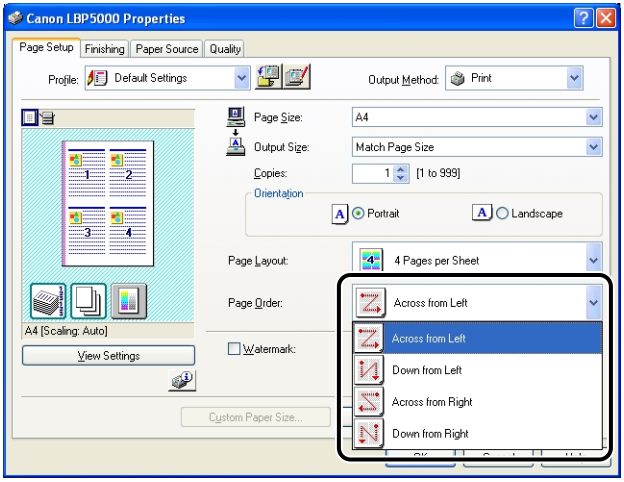

NOTE

The options under the [Page Order] pull-down menu differ depending on the paper orientation or the number of pages to be printed on one sheet.

4 Confirm the settings, then click [OK].

5 Click [OK] or [Print].

The printer starts printing.

Scaling Print Output

You can select a scale when [Page Layout] is set to [1 Page per Sheet].
When the settings for [Page Size] and [Output Size] are different from each other, the scale factor is adjusted automatically.
The scale factor can also be specified manually.
You can specify from 25 to 200 %.

Scaling a Document Automatically

1 **Display the [Page Setup] sheet, then specify the page size in [Page Size].**

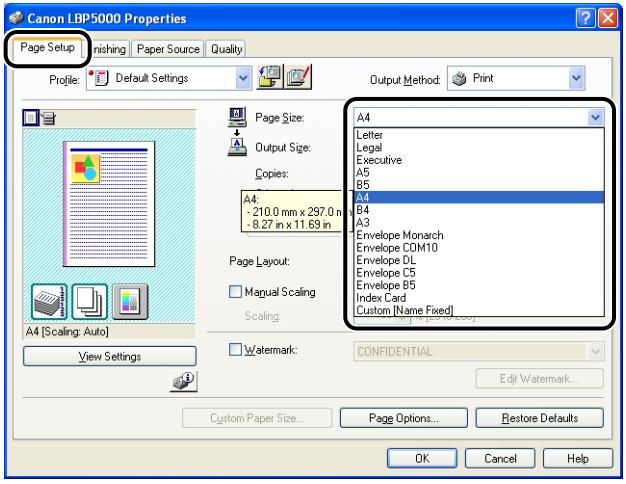

2 **Specify the paper size in [Output Size].**

3 **Confirm the settings, then click [OK].**

The scaling will be set automatically according to the sizes specified in [Page Size] and [Output Size].

Scaling a Document Manually

1 **Display the [Page Setup] sheet, then specify the page size in [Page Size].**

2 **Specify the paper size in [Output Size].**

3 **Select the [Manual Scaling] check box, then specify the value in the spin box.**

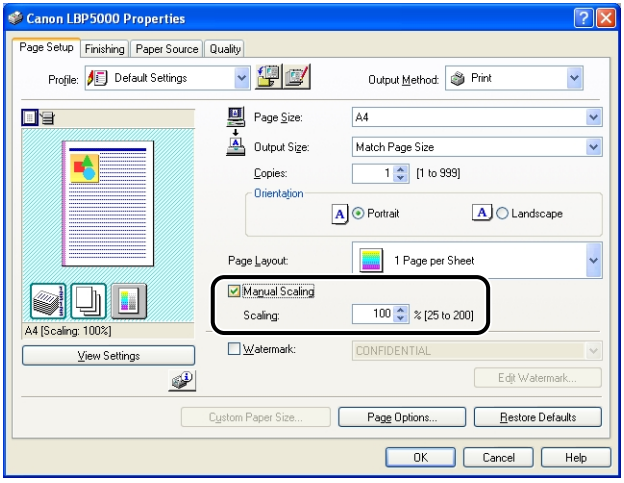

4 **Confirm the settings, then click [OK].**

Poster Printing

You can magnify a single page image and print it out on multiple sheets of paper. You can join these printouts together to make one large poster.

1 **If you are using Windows 2000/XP/Server 2003, display the [Device Settings] sheet, and then make sure that [Spooling at Host] is set to [Auto].**

2 **Display the [Page Setup] sheet, then select [Poster [N x N]] (N = 2, 3, 4) from [Page Layout].**

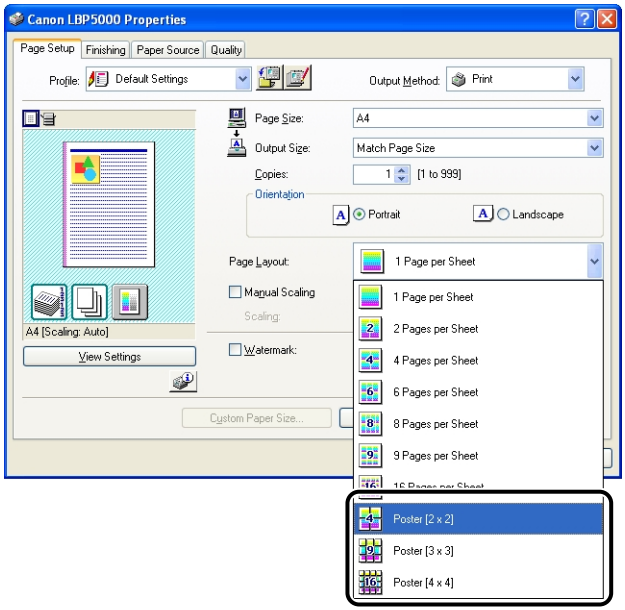

A layout image of the printed paper appears on Preview.

3 **Confirm the settings, then click [OK].**

4 **Click [OK] or [Print].**

The printer starts printing.

Watermark Printing

You can superimpose watermarks (such as [COPY], [DRAFT], etc.) over the documents created by an application. Select the desired character string from the list of the character strings registered as watermarks. Also, you can add new watermarks or edit the already registered watermarks by clicking [Edit Watermark] in the [Page Setup] sheet.

Watermark Printing

1 **If you are using Windows 2000/XP/Server 2003, display the [Device Settings] sheet, and then make sure that [Spooling at Host] is set to [Auto].**

2 **Display the [Page Setup] sheet, select the [Watermark] check box, and then select the watermark to print with the document from the drop-down list on the right of [Watermark].**

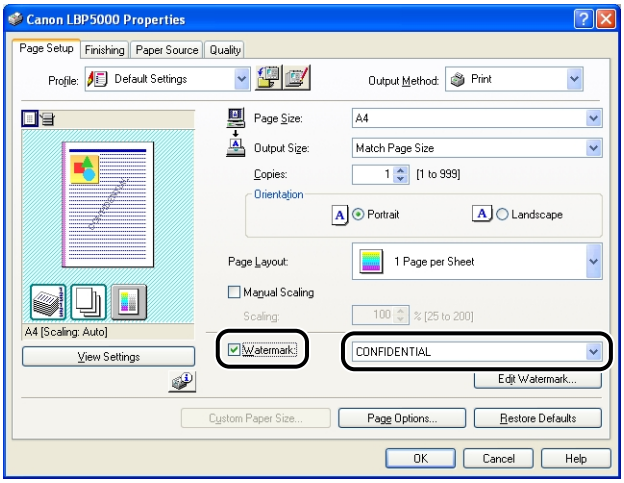

3 **Confirm the settings, then click [OK].**

4 **Click [OK] or [Print].**

The printer starts printing.

Editing Watermarks

1 **If you are using Windows 2000/XP/Server 2003, display the [Device Settings] sheet, and then make sure that [Spooling at Host] is set to [Auto].**

2 **Display the [Page Setup] sheet, select the [Watermark] check box, and then click [Edit Watermark].**

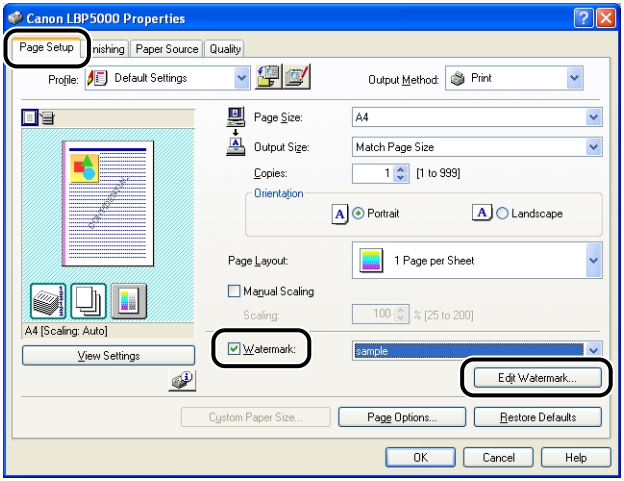

3 **Specify the options as needed.**

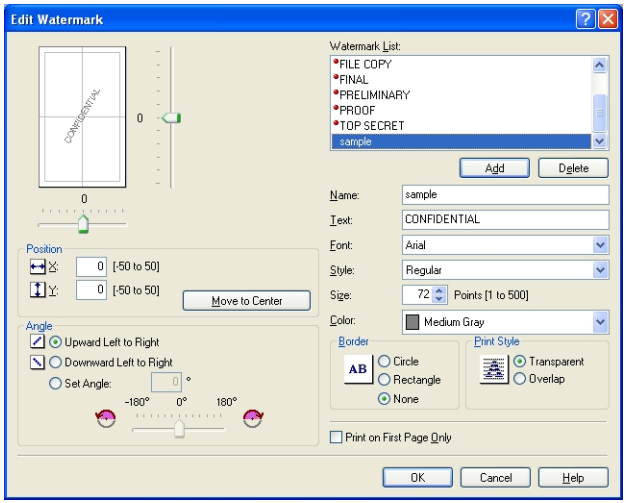

NOTE

- For more details on the settings, see Windows online Help. For details on methods for displaying Online Help, see "How to Use Online Help," on p. 4-76.
- When adding a new watermark, click [Add].
- You cannot change the settings for the default watermarks.

4 Confirm the settings, then click [OK].

The [Page Setup] sheet reappears.

Printing Borders and Printing Date

You can print with borders, printing date, and/or page numbers.

1 If you are using Windows 2000/XP/Server 2003, display the [Device Settings] sheet, and then make sure that [Spooling at Host] is set to [Auto].

2 Display the [Page Setup] sheet, then click [Page Options].

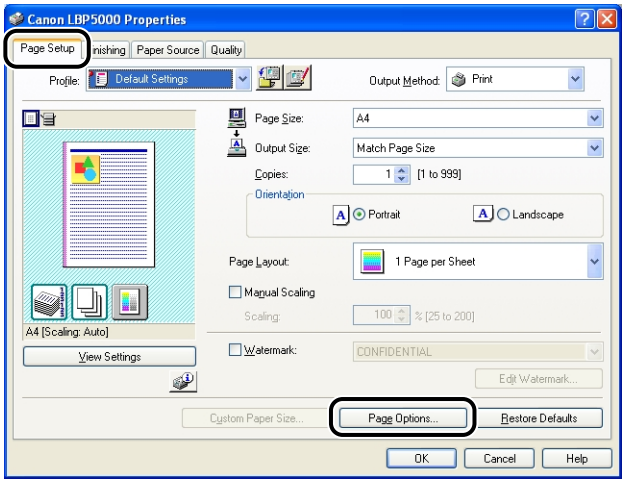

3 Specify the options as needed.

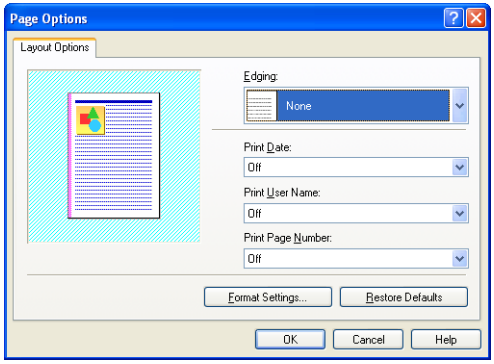

NOTE

For more details on the settings, see Windows online Help. For details on methods for displaying Online Help, see "How to Use Online Help," on p. 4-76.

4 Confirm the settings, then click [OK].

The [Page Setup] sheet reappears.

5 Click [OK].

6 Click [OK] or [Print].

The printer starts printing.

Printing with a Gutter

You can specify a gutter on the printouts. Valid gutter values range from 0 to 30 mm.

When a gutter is specified, the position of the page image is adjusted to make room for the gutter. At this point, you can select whether to reduce the size of the image to fit the remaining space.

1 **Display the [Finishing] sheet, specify the edge on which the gutter is to be located in [Binding Location], and then click [Gutter].**

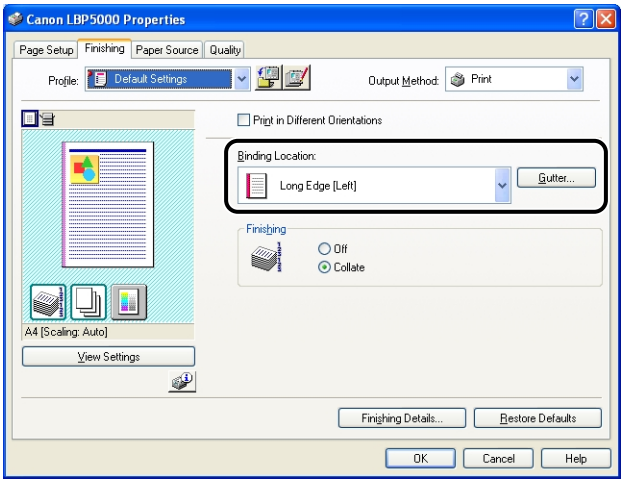

2 **Specify the options as needed.**

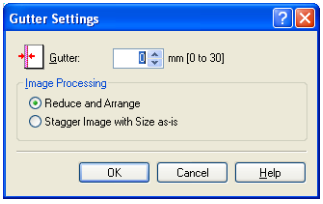

NOTE

For more details on the settings, see Windows online Help. For details on methods for displaying Online Help, see "How to Use Online Help," on p. 4-76.

3 Confirm the settings, then click [OK].

The [Finishing] sheet reappears.

4 Confirm the settings, then click [OK].

5 Click [OK] or [Print].

The printer starts printing.

Specifying the Paper Output Method

Select a paper output method from the following options.

- [Off]
  Printouts of a complete job are grouped.
  For example, if you are printing three copies of a 3-page document, printouts of a complete job are grouped, arranged in this page order: 1, 1, 1, 2, 2, 2, 3, 3, 3.
- [Collate]
  Printouts of a complete job are collated.
  For example, if you are printing three copies of a 3-page document, printouts of a complete job are collated, arranged in this page order: 1, 2, 3, 1, 2, 3, 1, 2, 3.

1 Display the [Finishing] sheet, then select the output method in [Finishing].

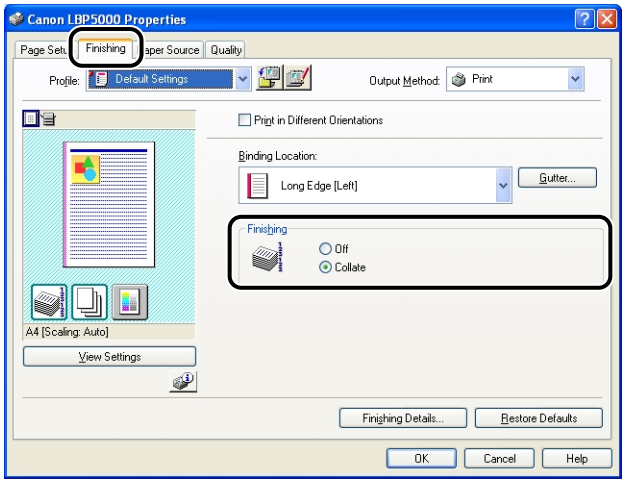

2 Confirm the settings, then click [OK].

3 Click [OK] or [Print].

The printer starts printing.

Printing with Upper Left of Sheet as Starting Point

Since printing is usually performed with the upper-left 5 mm (10 mm for envelopes) margin within the printable area of a sheet as the starting point, a certain portion (lower right) may be missing when printing data with no margin. In this case, you can print with the upper-left 0 mm margin as the starting point so that margins are created evenly on all sides of the paper.

IMPORTANT

- 2 mm margin is secured respectively for all sides of the sheet (Only the starting point is changed).
- Depending on the print data to be printed, the edge of paper may be missing partly during printing.
- The function of [Print with Upper Left of Sheet as Starting Point] may be disabled depending on the application you are using.

1 Display the [Finishing] sheet, then click [Finishing Details].

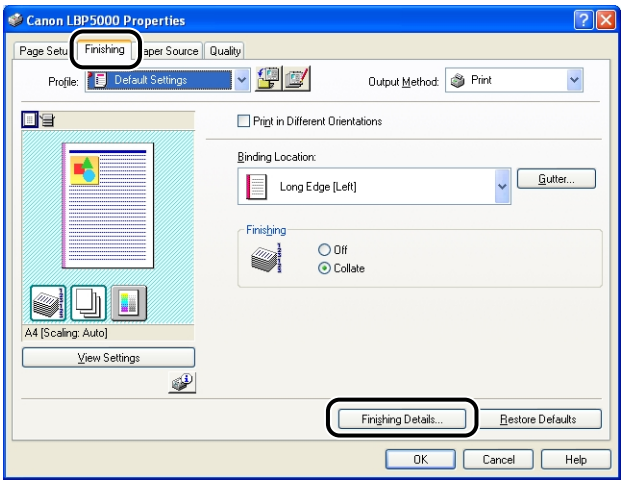

2 Select the [Print with Upper Left of Sheet as Starting Point] check box.

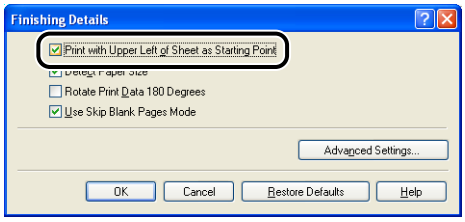

3 Confirm the settings, then click [OK].

The [Finishing] sheet reappears.

4 Click [OK].

5 Click [OK] or [Print].

The printer starts printing.

Printing with the Data 180 Degrees Rotated

Prints with the image 180 degrees rotated.

This option is useful for printing envelopes and Index Card size media that can be fed only in specific orientations.

1 Display the [Finishing] sheet, then click [Finishing Details].

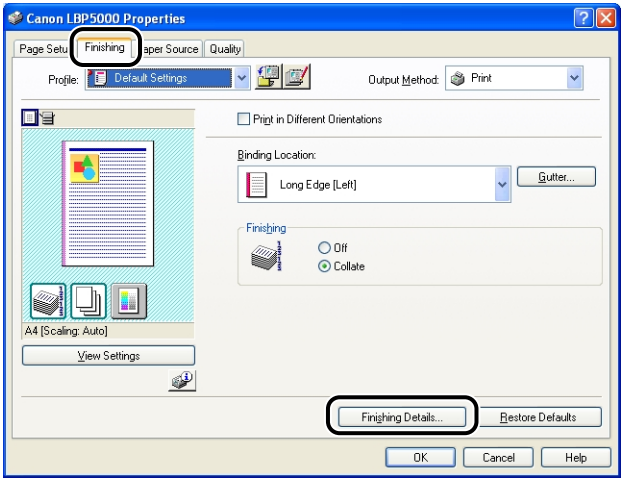

2 Select the [Rotate Print Data 180 Degrees] check box.

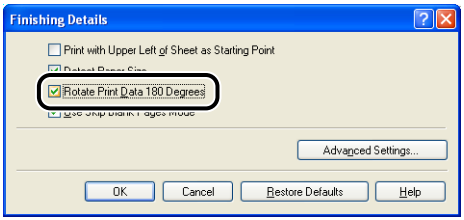

3 Confirm the settings, then click [OK].

The [Finishing] sheet reappears.

4 Click [OK].

5 Click [OK] or [Print].

The printer starts printing.

Smoothing Out Rough-Textured Images

When image data such as photographic images are enlarged in size in an application and printed, the printed images can look rough or jagged. You can print this kind of low-resolution image data with smoothing it out.

1 Display the [Quality] sheet, then click [Settings].

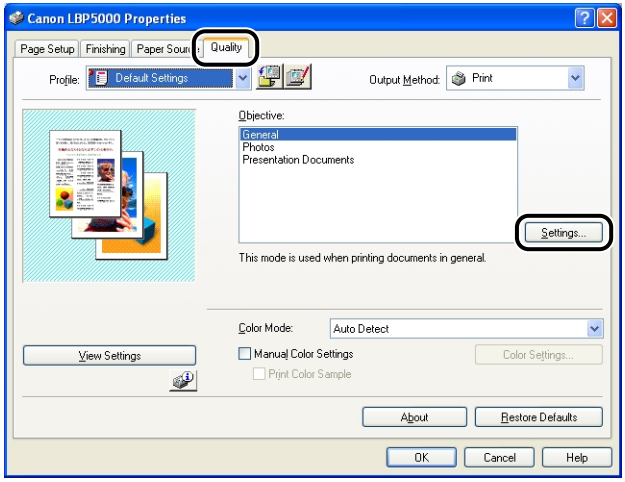

2 Select the [Enable Image Correction] check box.

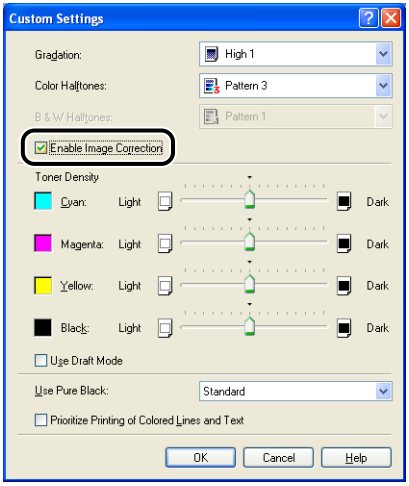

3 Confirm the settings, then click [OK].

The [Quality] sheet reappears.

4 Click [OK].

5 Click [OK] or [Print].

The printer starts printing.

Printing with Toner Density Adjusted

You can print with the toner density of each color (black, yellow, magenta, and cyan) adjusted.

1 Display the [Quality] sheet, then click [Settings].

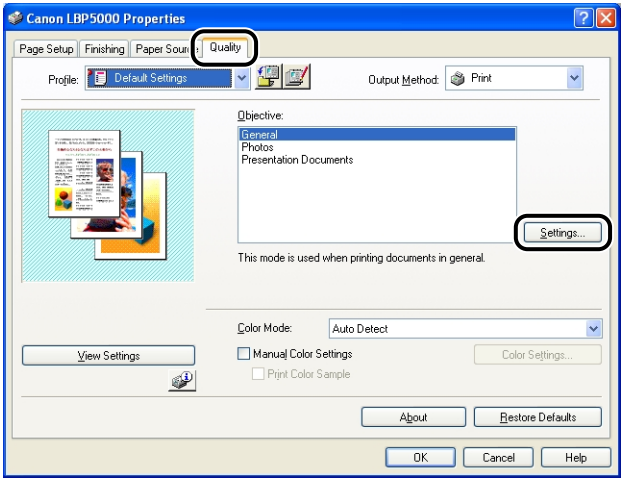

2 Adjust the toner density by dragging the [Toner Density] slider of each color from side to side.

Move the slider to the right to make it denser and to the left to make it lighter.

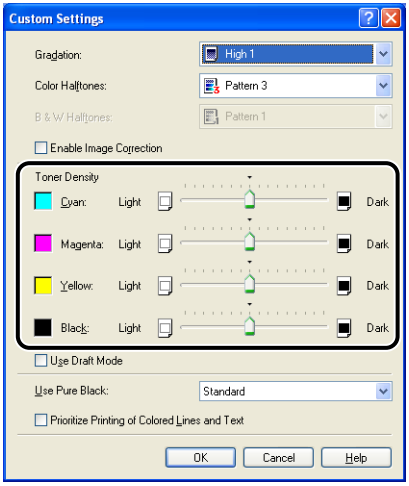

3 Confirm the settings, then click [OK].

The [Quality] sheet reappears.

4 Click [OK].

5 Click [OK] or [Print].

The printer starts printing.

Color Settings

You can perform color printing with the colors originally specified.

1 Display the [Quality] sheet, select the [Manual Color Settings] check box, and then click [Color Settings].

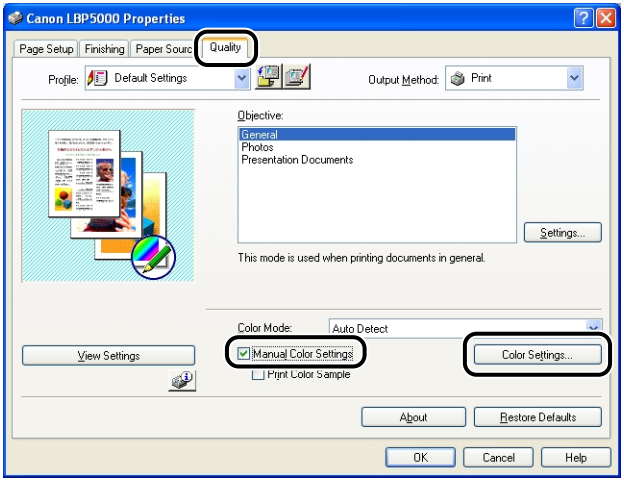

2 Display the [Color Adjustment] sheet, then adjust the colors by moving the [Preview Image] at the center of [Adjustment Grid] from side to side or up and down.

When [Preview Image] is in the center, the image has not been adjusted. There are three methods to adjust it as follows:

- Clicking the buttons of each color around [Adjustment Grid] to deepen the color by one increment.
- [Preview Image] is moved to the desired color you clicked on [Adjustment Grid].

- Dragging [Preview Image] in the center onto the desired color.

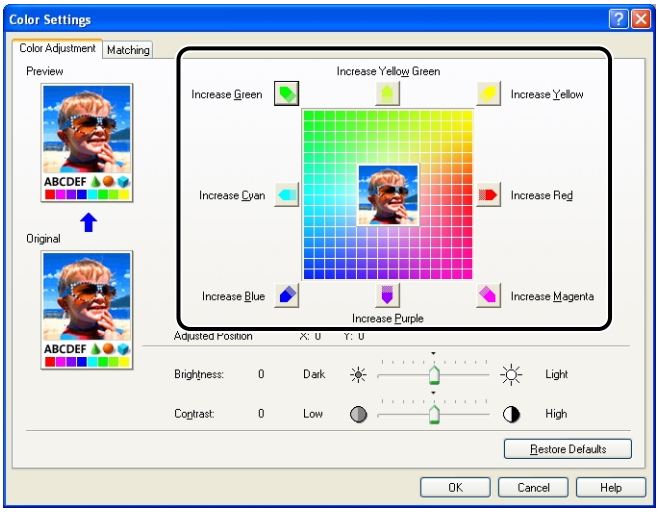

3 Confirm the settings, then click [OK].

The [Quality] sheet reappears.

If you are using Windows 2000/XP/Server 2003, you can print an adjusted color sample. For more details, see "Printing a Color Sample (Windows 2000/XP/Server 2003 only)," on p. 4-68.

Specifying the Brightness and Contrast

You can perform color printing with the brightness and contrast specified.

1 **Display the [Quality] sheet, select the [Manual Color Settings] check box, and then click [Color Settings].**

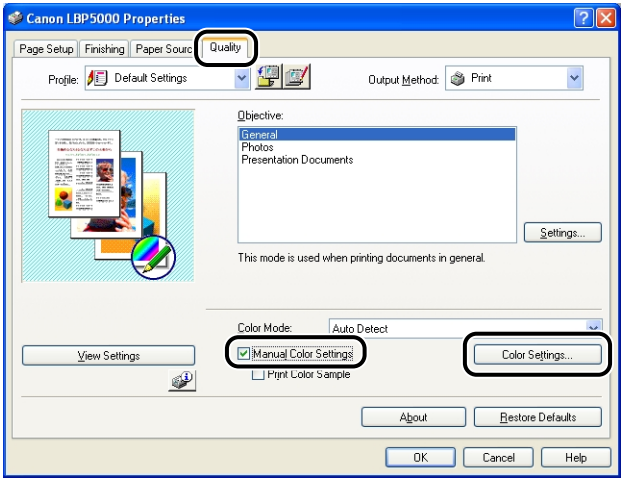

2 Display the [Color Adjustment] sheet, then adjust the brightness and contrast for the print data.

Move the [Brightness] slider to the right to make it lighter and to the left to make it darker.
Move the [Contrast] slider to the right to make it higher and to the left to make it lower.

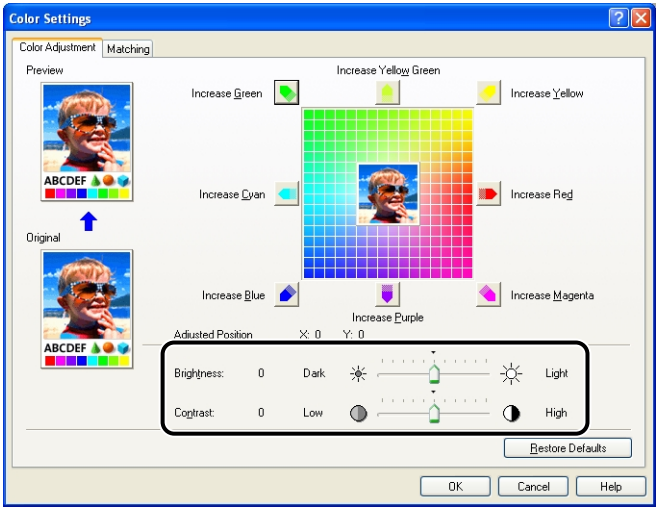

3 Confirm the settings, then click [OK].

The [Quality] sheet reappears.

If you are using Windows 2000/XP/Server 2003, you can print a sample after adjusting the brightness and contrast. For more details, see "Printing a Color Sample (Windows 2000/XP/Server 2003 only)," on p. 4-68.

Printing a Color Sample (Windows 2000/XP/Server 2003 only)

You can print an adjusted color sample after specifying the settings in the [Color Adjustment] sheet. [Preview] is printed in the center of the paper, and this is surrounded by images where the color tone is changed by 1 unit in each of the corresponding directions. This is useful to adjust the colors on the printed paper.

1 **If you are using Windows 2000/XP/Server 2003, display the [Device Settings] sheet, and then make sure that [Spooling at Host] is set to [Auto].**

2 **Display the [Quality] sheet, select the [Manual Color Settings] check box, and then select the [Print Color Sample] check box.**

When printing a sample after adjusting the brightness or contrast, set [Color Mode] to [Black and White].

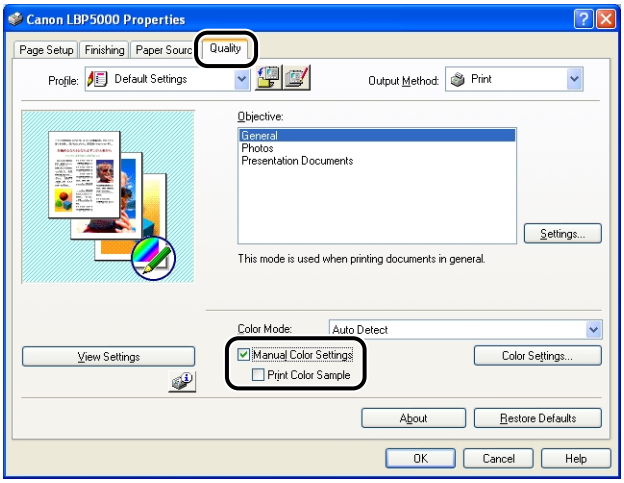

3 **Confirm the settings, then click [OK].**

IMPORTANT

When printing a color sample, be sure to set [Page Layout] in the [Page Setup] sheet to [1 Page per Sheet].

4 Click [OK] or [Print].

The color sample is printed.

IMPORTANT

When you are finished with printing color samples, clear the [Print Color Sample] check box.

Specifying "Profiles"

You can save or import all the printing preferences specified in the [Page Setup], [Finishing], [Paper Source], and [Quality] sheets at once. You can also add, edit or select the settings.

Save the printing preferences as a "Profile" using the following procedure.

Make sure that any one of the [Page Setup], [Finishing], [Paper Source] and [Quality] sheets is displayed, then perform the following procedure.

IMPORTANT

The settings using the following options in the [Quality] sheet - [Custom Settings] dialog box cannot be added as a "Profile".
- [Color Halftones]
- [B & W Halftones]
- [Use Pure Black]
- [Prioritize Printing of Colored Lines and Text]

NOTE

- For Windows 98/Me, up to 50 "Profiles" can be added. To make it possible to add up to 50 "Profiles" for each user account, double-click [My Computer] → [Control Panel] → [Passwords] to display the [User Profiles] sheet, and then select [Users can customize their preferences and desktop settings.].
- For Windows 2000/XP/Server 2003, up to 50 "Profiles" for each user account can be added.
- If the printer name has been changed, any saved "Profiles" cannot be imported. To import the saved "Profiles", change the printer name to its previous one.
- The "Profile" information file saved on Windows 98/Me cannot be used on Windows 2000/XP/Server 2003 and vice versa.

Adding a "Profile"

1 **In the [Page Setup], [Finishing], [Paper Source], and [Quality] sheets, specify the printer settings that you want to add.**

2 **Click [ ] (Add Profile).**

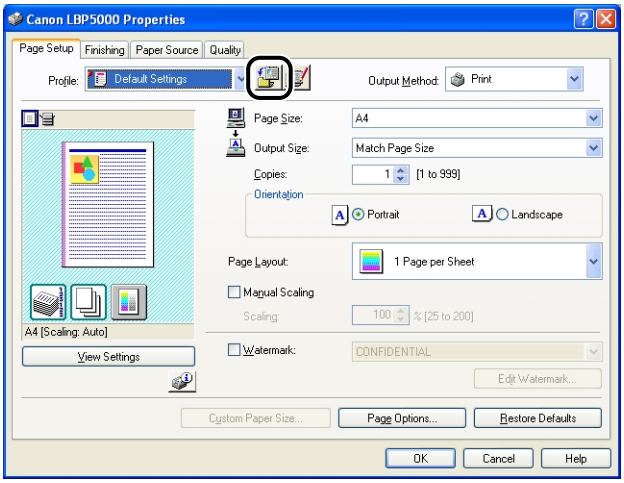

3 **Enter the name of the "Profile" in [Name].**

[Icon] allows you to select the icon for the "Profile". Enter any comments in [Comment] as needed.

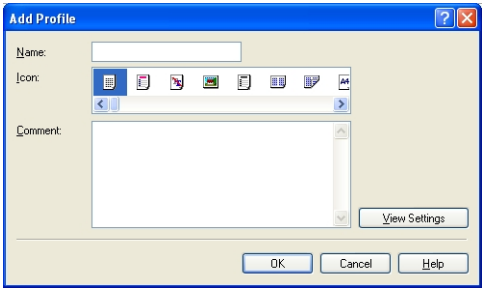

NOTE

You can enter up to 31 characters for [Name] and up to 255 characters for [Comment].

● Confirming the Printer Settings

❑ Click [View Settings].

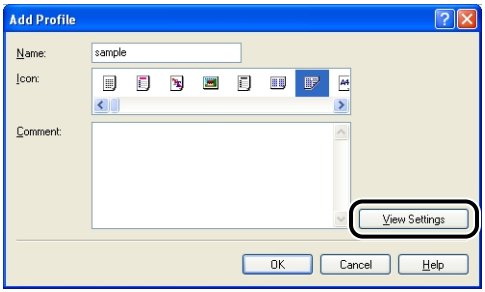

❑ When [OK] is clicked, the [Add Profile] dialog box reappears.

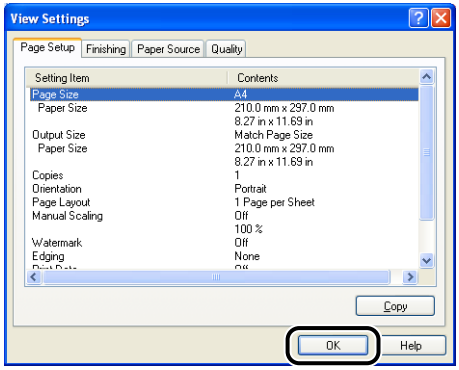

4 Click [OK].

The Properties dialog box reappears.

Make sure that the name of the added "Profile" is in [Profile List].

Editing/Deleting a Profile

You can change or save the Profile information or delete it from [Profile List].

1 Click [ ] (Edit Profile).

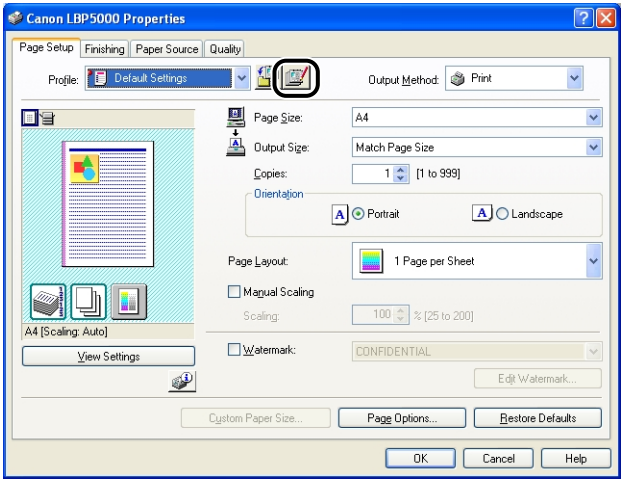

2 Edit information about the "Profiles".

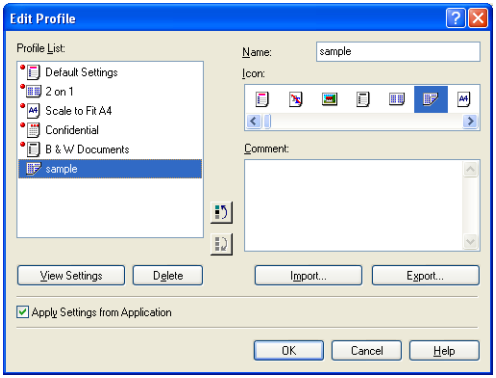

- **Editing a Profile**
  - ❑ You can change the settings for [Name], [Icon], and [Comment].
  - ❑ By clicking [ ] or [ ], you can change the order of the selected "Profile".
  - ❑ When [Import] is clicked, information about the "Profiles" is imported from the previously saved file.

❑ When [Export] is clicked, information about the selected "Profile" is saved into the file. The "Profile" saved in the file can be used again even if it is deleted from the list.

❑ When the [Apply Settings from Application] check box is selected, the settings for [Page Size], [Orientation], and [Copies] specified in the application are applied to printing. The settings for these options in the application stay enabled even if the "Profiles" is changed.

● Deleting a Profile

❑ When [Delete] is clicked, the "Profile" is deleted from the list.

IMPORTANT

You can delete only custom "Profiles". You cannot delete the default "Profiles". Also, you cannot delete the "Profile" currently selected in each sheet.

Editing Jobs with PageComposer

You can combine two jobs into one and change the job settings for the combined job. You can edit a job in another application.
You can also preview the job.

Make sure that any one of the [Page Setup], [Finishing], [Paper Source], or [Quality] sheet is displayed in the [Document Properties] dialog box, then perform the following procedure:

1 Select [Edit and Preview] from [Output Method].

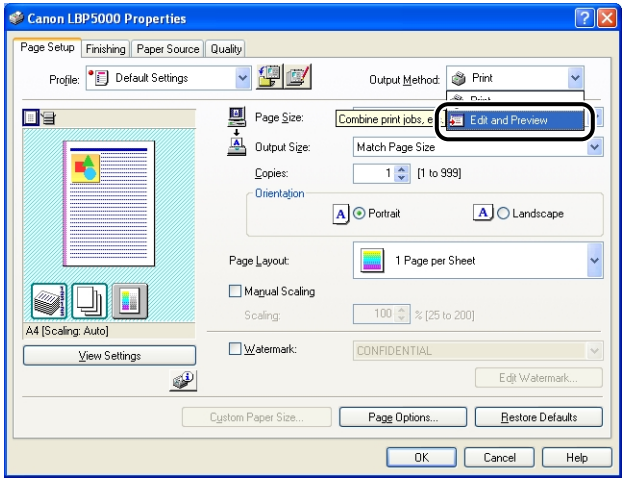

2 The message that informs you that the output method is going to be switched to the [Edit and Preview] mode is displayed. Click [OK].

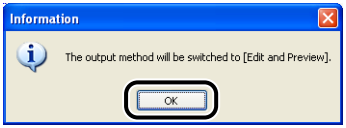

3 Specify the printing preferences in each sheet, then click [OK].

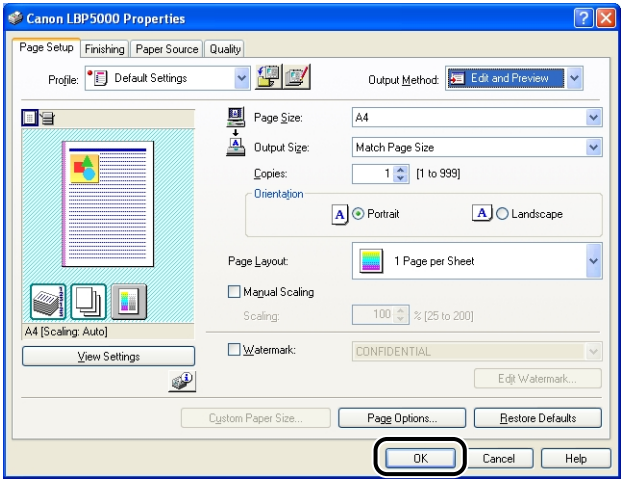

The [Print] dialog box reappears.

4 Click [OK] or [Print].

Depending on the application you are using, click [Print].

The [Canon PageComposer] dialog box is displayed, and the job is displayed on a list.

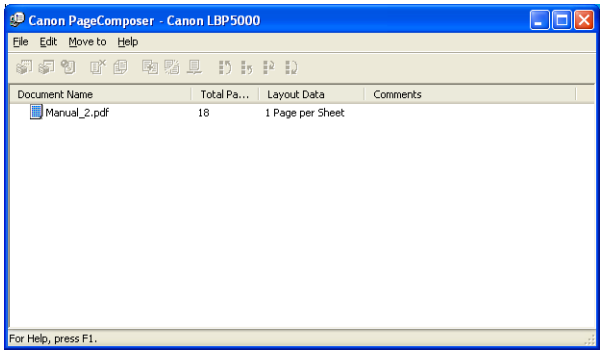

5 Repeat Step 1 to 4 for the jobs that you want to edit.

6 Edit the jobs on the list in the [Canon PageComposer] dialog box.

NOTE

- For more details on the setting procedures for the [Canon PageComposer] dialog box, see Help for Canon PageComposer.
- When the [Edit and Preview] mode is selected in the [Printer Properties] dialog box and [ ] (Lock) is set, the [Canon PageComposer] dialog box appears each time you print.

How to Use Online Help

For details on using the printer driver or the Printer Status Window, display Online Help using the following procedure to see the instructions in it.

Displaying Online Help on the Options Displayed on the Screen

There are three methods to display Online Help on the windows of the printer driver or the Printer Status Window.

- Right-click the item of which you want to display Online Help, then click [What's This?] from the pop-up menu.

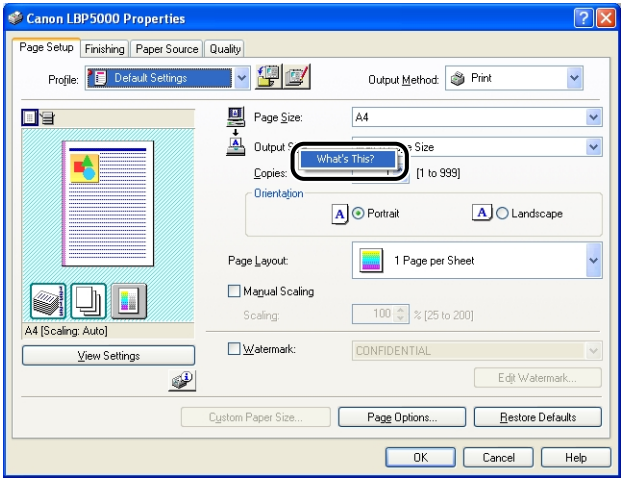

- Click [?] (Help) on [Titlebar], move the [?]-attached cursor to the item of which you want to display Help, then click it.

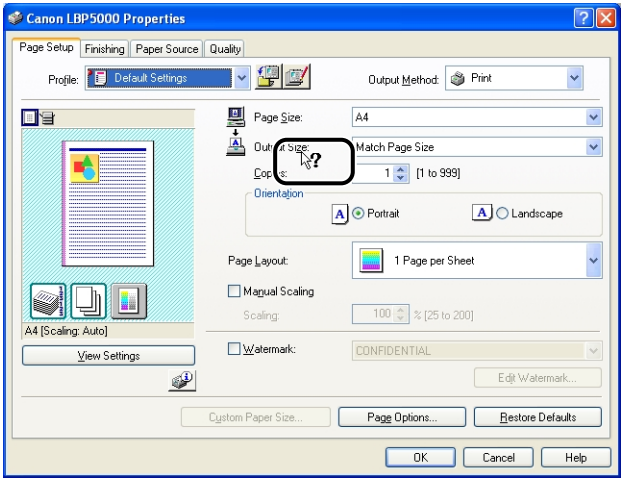

- Press the [TAB] key on your keyboard to select the item of which you want to display Help, then press the [F1] key.

Displaying Online Help on the Operation Procedures

Display the procedures for operating the printer driver or the Printer Status Window using the following procedure.

1 Click [Help].

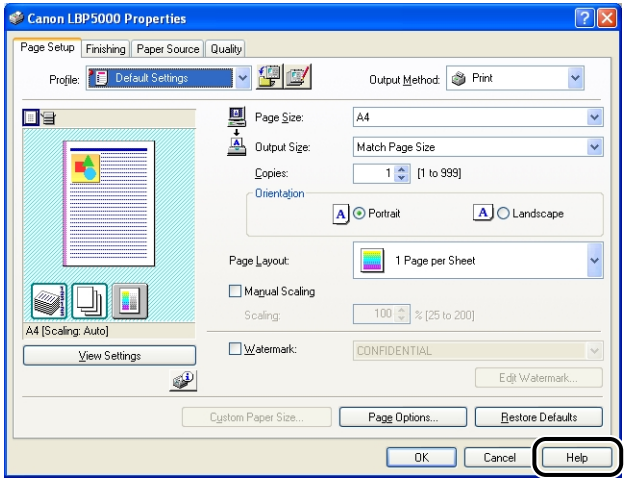

2 Click [Contents].

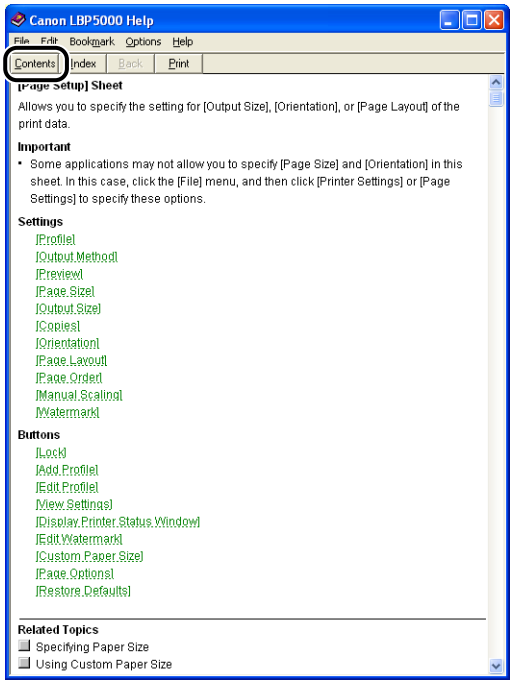

3 Double-click the title of which you want to know the operation procedure.

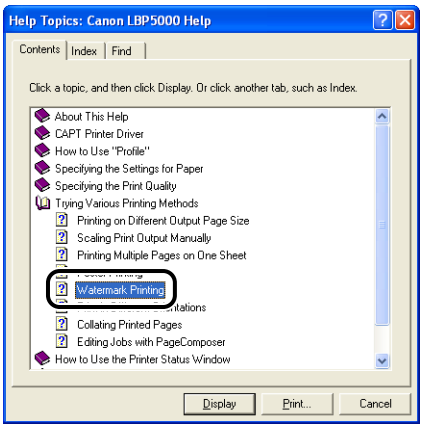

Retrieving the Option about Which You Want to Know with Keywords and Displaying its Online Help

Retrieve the option about which you want to know with keywords and display its Online Help using the following procedure.

1 Click [Help].

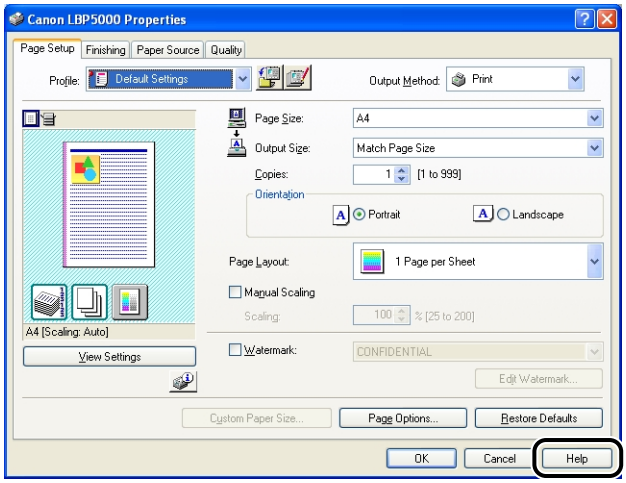

2 Click [Index].

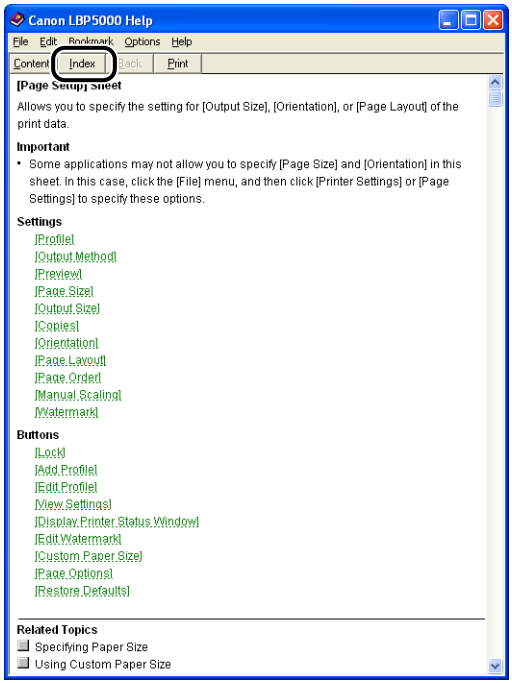

3 Enter the keyword to display the option about which you want to know.

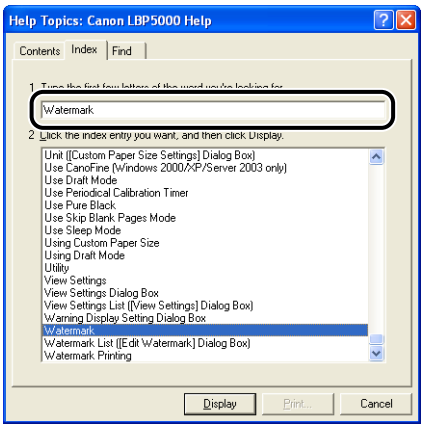

4 Double-click the title of the option about which you want to know.

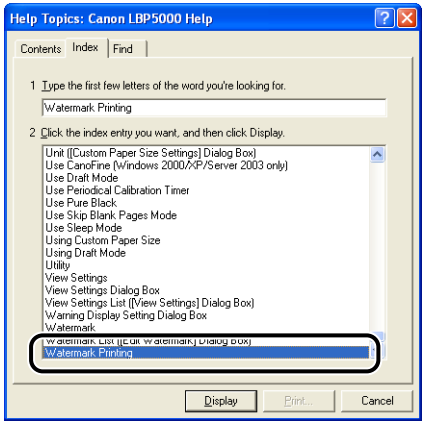

NOTE

Depending on your operating system, a list of words created automatically may be displayed on [Find]. You can also display Online Help by selecting a word that is related to the option about which you want to know from the displayed word list.

Manuals

This section describes the procedures for installing or uninstalling the manuals included on the CD-ROM supplied with the printer on the computer you are using.

Installing the Manuals

Install the manuals in the CD-ROM supplied with the printer on the computer using the following procedure.

1 Insert the supplied "LBP5000 User Software" CD-ROM into the CD-ROM drive.

If the CD-ROM is already in the drive, eject the disk and re-insert it into the drive.

IMPORTANT

If CD-ROM Setup does not appear, select [Run] from the [Start] menu, enter "D:\English\MInst.exe", and then click [OK]. (The CD-ROM drive name is indicated as "D:" in this manual. The CD-ROM drive name may differ depending on the computer you are using.)

2 Click [Custom Installation].

3 Clear the [Printer Driver] check box, then click [Install].

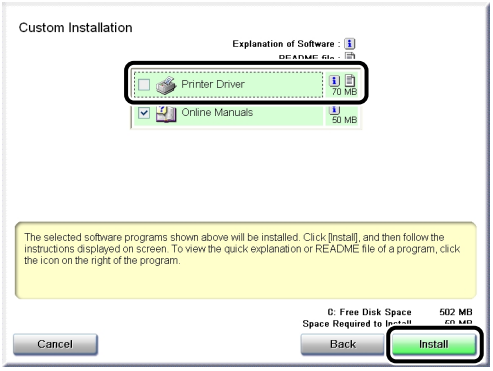

Installation of the instruction manuals starts.

4 When screen for completing the installation appears, click [Next].

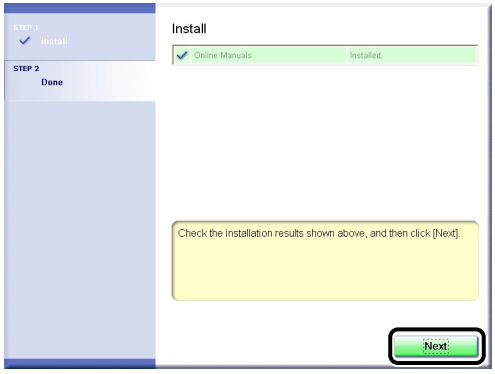

5 Click [Exit].

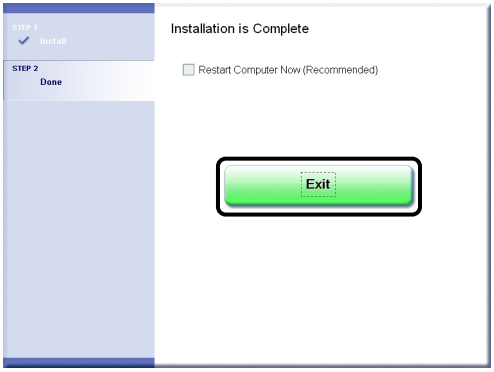

The installation of the manuals is completed.
To see the manuals, double-click [LBP5000 Online Manuals] created on the desktop to display respective manuals.

Uninstalling the Manuals

The installed manuals can also be uninstalled by uninstalling the CAPT software with the Uninstaller. For details on uninstalling the CAPT software, see "Uninstalling the CAPT Software," on p. 3-75. When uninstalling the manuals only without uninstalling the CAPT software, put "\Program Files\Canon\LBP5000\Manuals" in the drive of the operating system you are using and the following files created on the desktop in the Recycle Bin to delete them.

- "\Program Files\Canon\LBP5000\English"
  - [Index.pdf]
  - [Manual_1.pdf]
  - [Manual_2.pdf]
  - [Manual_3.pdf]
  - [Manual_4.pdf]
- Desktop
  - [LBP5000 Online Manuals] (Shortcut for [Index.pdf])

IMPORTANT

If the manuals are installed on Windows 2000/XP/Server 2003 logged on by a user who is a member of Administrators, they cannot be uninstalled from the computer logged on by anyone other than users who are members of Administrators. Be sure to log in as a member of Administrators before the uninstallation.

Printer Status Window

The Printer Status Window shows the printer status of LBP5000 (such as the operation status and job information) with messages, animations, sounds, and icons.

NOTE

To activate a sound, your computer must have a PCM synthesizer, and have the driver for PCM synthesizer installed.

Functions on the Printer Status Window

The functions on the Printer Status Window are the same on both Windows 98/Me and Windows 2000/XP/Server 2003.

For more details on operations, see Online Help. For details on methods for displaying Online Help, see "How to Use Online Help," on p. 4-76.

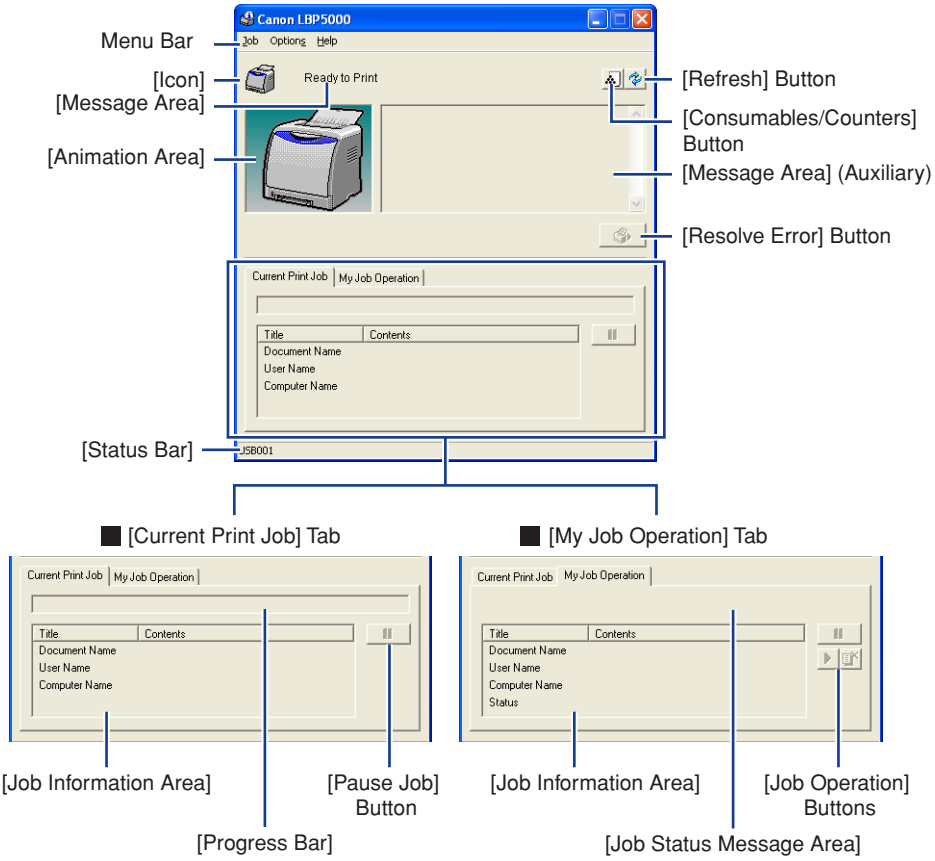

■ Menu Bar

[Job] Menu	Performs a job operation (pause, resume, or delete). Also, when a job is paused for some reason, you can resume the job by selecting [Resolve Error]. The current job for which you have no access permission is grayed out.
[Options] Menu	Allows you to change the preferences for the Printer Status Window and perform calibration of the printer.
[Help] Menu	Allows you to search for the desired items using keywords and displays [About] (the version information) of the Printer Status Window.

■ Other Functions

[Icon]	Displays the printer status.
[Message Area]	Displays the current printer status with a short message.
[Message Area] (Auxiliary)	Displays additional information when an error occurrs, etc.
[Animation Area]	Displays the printer status with an animated graphic. The background color changes from blue (normal) to orange when user action is required, or to red when a warning is issued.
[Consumables/Counters] Button	Displays the [Consumables/Counters] dialog box. The dialog box displays icons and messages about the life of each of the color toner cartridges. Also displays the total number of printed pages.
[Refresh] Button	Obtains the printer status and refreshes the Printer Status Window display.
[Resolve Error] Button	Allows you to resume a job when the job is paused for some reason.
[Current Print Job] Tab	[Progress Bar]: Indicates the progress of the current job by showing the number of printed pages or changing the background color. [Pause Job] Button: Pauses the job temporarily. [Job Information Area]: Displays information about the job.
[My Job Operation] Tab	[Job Status Message Area]: Displays a message about the status of the job. [Job Operation] Buttons: Perform a job operation (pause, resume, or delete). The current job for which you have no access permission is grayed out. [Job Information Area]: Displays information about the job.
[Status Bar]	Displays the device to which the printer is connected. Instructions for operating the menu are displayed during menu operation.

Displaying the Printer Status Window

There are the following two ways to display the Printer Status Window:

- Run by clicking [ ] (Display Printer Status Window) in locations such as in the [Page Setup] sheet in the [Document Properties] dialog box.

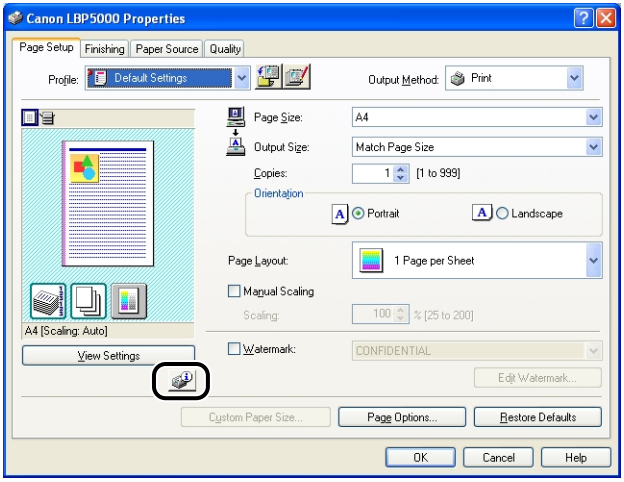

- Display the [Printer Properties] dialog box and display the [Configuration]/[Device Settings] sheet, and then select the [Show Icon in the Taskbar] check box. The icon for the Printer Status Window is displayed in the Windows taskbar. Click the icon, then click [Canon LBP5000] to run it.

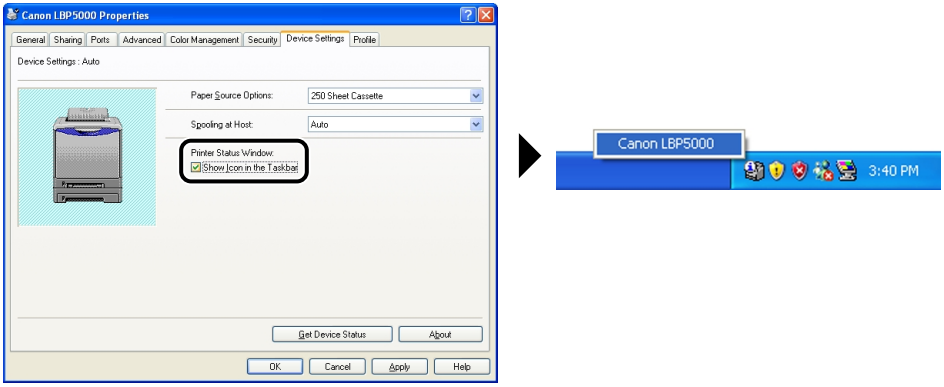

The Printer Status Window appears automatically during printing or when an error occurs. If [When Starting Printing] is not selected in the [Preferences] dialog box in the [Options] menu, the Printer Status Window does not appear during printing. (See "[Preferences] Menu," on p. 4-90)

- During printing

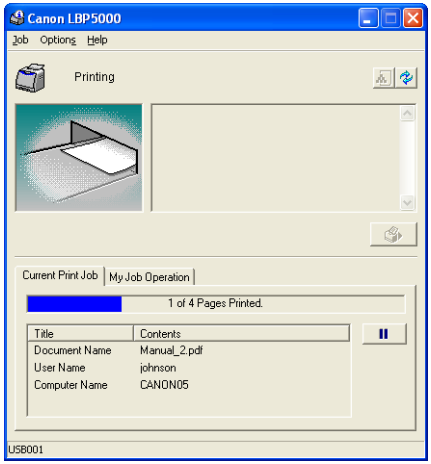

- When an error occurs

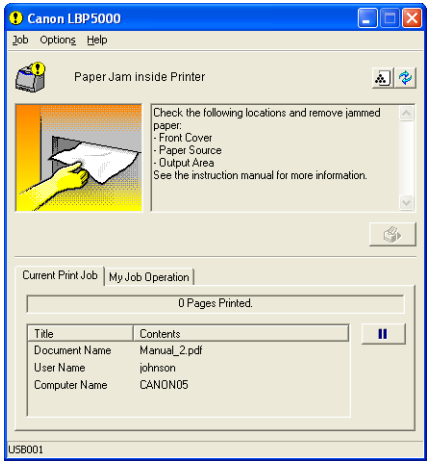

[Preferences] Menu

The [Preferences] menu allows you to display the Printer Status Window automatically, specify the sound settings, and make the Printer Status Window monitor the printer status.

For more details on each setting, see Online Help. For details on methods for displaying Online Help, see "How to Use Online Help," on p. 4-76.

1 Select [Preferences] from the [Options] menu.

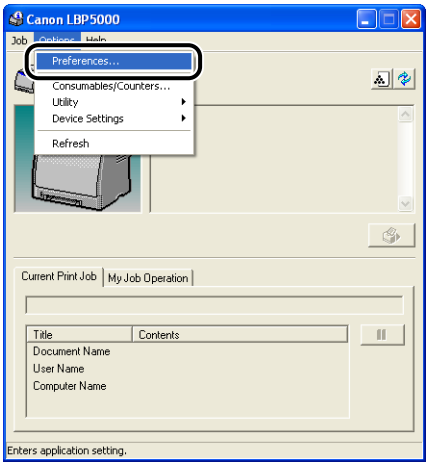

The [Preferences] dialog box is displayed.

2 Confirm each of the settings, then click [OK].

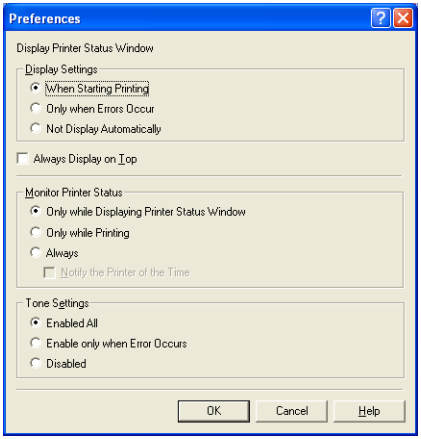

[Consumables/Counters] Menu

Select [Consumables/Counters] from the [Options] menu to display the [Consumables/Counters] dialog box. In the [Consumables/Counters] dialog box, icons and meanings that indicate life of toner cartridges of each color and the number of total printed pages are displayed.

You can obtain the same result by clicking [ ] (Consumables/Counters) in the Printer Status Window.

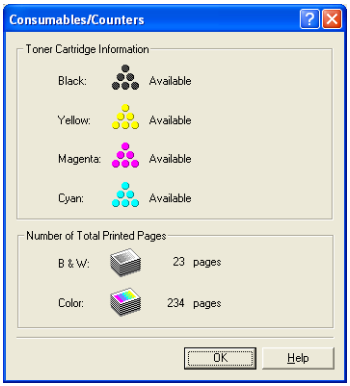

[Utility] Menu

The [Utility] menu performs calibration of the printer or Configuration Page Print.

■ [Calibration]

Performs calibration of the printer manually. Perform calibration when the colors have changed and the data is not printed in the correct colors (specified colors) or a color deviation occurs. For more details, see "Calibrating the Printer," on p. 5-17.

■ [Cleaning]

When the front or back of the printed paper has smudge marks, the fixing roller needs to be cleaned. Print quality deterioration can be prevented by cleaning the fixing roller. For more details, see "Cleaning the Fixing Roller," on p. 5-22.

■ [Configuration Page Print]

Prints the optional settings of the printer, the settings for [Device Settings] in the [Options] menu, and the current printer status such as the total number of printed pages. For more details, see "Confirming the Printer Features," on p. 7-41.

■ [Network Status Print] (Only when the network board is installed)

Prints the version of the optional network board or the TCP/IP settings. For more details, see "Chapter 4 Troubleshooting" in Network Guide.

[Device Settings] Menu

You can specify the settings related to the printer, such as specifying the size of the paper in the paper cassette, sleep settings, and the settings for calibration.

■ [Register Paper Size in Cassettes]

Specifies the size of the paper loaded in the paper cassette. For more details, see "Loading Plain Paper, Heavy Paper, Transparencies, or Labels in the Paper Source" (p. 2-14), "Loading Index Card Size Media in the Paper Source" (p. 2-26), "Loading Envelopes in the Paper Source" (p. 2-37), and "Loading Custom Size Paper (Non-Standard Paper) in the Paper Source" (p. 2-47).

■ [Sleep Settings]

Specify whether to use the sleep mode or the time to switch to the sleep mode. When data is not sent from the computer or when the printer status remains as it is longer than the time specified in [Time to Enter Sleep Mode], the printer switches to the sleep mode. The sleep mode consumes less power during the sleep state. When you use the sleep mode, select the [Use Sleep Mode] check box, and then specify the time to switch to the sleep mode in [Time to Enter Sleep Mode]. For more details, see "Power Saving (Sleep Mode)," on p. 1-12.

■ [Calibration Settings]

You can perform calibration automatically at the designated time everyday. When data is not sent from the computer or when the printer status remains as it is longer than the fixed period, the printer can automatically perform calibration periodically. For more details, see "Calibrating the Printer," on p. 5-17.

■ [Warning Display Setting]

Specify whether to display the message that warns you of the printer status (the message indicating that the toner cartridge needs to be replaced) in the Printer Status Window.

■ [Network Settings] (Only when the network board is installed)

If you are using Windows XP Service Pack 2 or another operating system equipped with Windows Firewall, and the network settings for the printer is not specified, the printer may not be detected when installing the software for the network environment. In this case, connect the printer and computer with the USB cable, install the printer driver, and then specify the network settings in this dialog box in advance. For more details, see "Network Guide".

■ [Assisting Print Setting]

You can specify the method for printing data that contains both color pages and black-and-white pages.

■ [Small-size Paper Special Setting]

When printing with paper switched from narrow paper (A5 size etc.) to wider paper (A4 size etc.), the printer may stop operating temporarily to cool down the fixing unit so that the print quality is maintained. You can specify the waiting time before the print operation begins for this case.

[Refresh]

Selecting [Refresh] from the [Options] menu obtains the latest printer status and refreshes the Printer Status Window display.

You can obtain the same result by clicking [ ] (Refresh) in the Printer Status Window.

[Resolve Error]

When a job is paused for some reason, you can resume the job by selecting [Resolve Error] from the [Job] menu. Resuming a job by selecting [Resolve Error] may cause unexpected print results. [Resolve Error] is disabled in any of the following cases:

- When the job is paused due to a printer error such as a paper jam and paper-out condition
- When another user's job is paused ([Resolve Error] is enabled on the print server if the printer is shared on a network)

You can obtain the same result by clicking [ ] (Resolve Error) in the Printer Status Window.

IMPORTANT

If the message <Insufficient Disk Space> is displayed, delete unnecessary files, then select [Resolve Error].

Displaying Printer Status When Using a Print Server

The status of a network printer can be displayed on the client's Printer Status Window as well as on the print server's.

If the print server has not been started up, the Printer Status Window is not displayed in the client computers.

- Printer Status of the Print Server
  - Displaying the Printer Status Window and Job Operation

[Current Print Job] Tab		[My Job Operation] Tab		Job Operation
[Job Information Area]	[Pause Job] Button	[Job Information Area]	[Job Operation] Buttons	
Displays the first job	Enabled*1	Displays the first job*2	Enabled	[Pause Job]: Pauses all the jobs [Resume Job]: Resumes all the jobs [Delete Job]: Deletes the first job

*1 The [My Job Operation] tab is displayed by clicking the [Pause Job] button.

*2 If any job is printed by the computer as the print server, the job is displayed.

- Plays a sound.
- If the print server is running Windows 2000/XP/Server 2003, the status is not displayed when no one is logged on. (Printing is possible.)

• Printer Status at the Clients

- Displaying the Printer Status Window and Job Operation

[Current Print Job] Tab		[My Job Operation] Tab		Job Operation
[Job Information Area]	[Pause Job] Button	[Job Information Area]	[Job Operation] Buttons	
Displays the first job on the print server	When your job is displayed in [Job Information Area]: Enabled* When another user's job is displayed in [Job Information Area]: Disabled	Displays your first job	Enabled	[Pause Job]: Pauses all your jobs [Resume Job]: Resumes all your jobs [Delete Job]: Deletes your first job

* The [My Job Operation] tab is displayed by clicking the [Pause Job] button.

- You cannot use the [Resolve Error] button when another user's job is paused.
- While another user's job is being printed, [Progress Bar] is displayed in gray.
- Sounds are played only from the clients whose user name is verified by the print server.

NOTE

To display the printer status when printing a job over the network, a network environment that uses one of the following protocols is required.

- TCP/IP
- NetBEUI

Routine Maintenance

5
CHAPTER

This chapter describes the procedures for maintaining the printer such as replacing the cartridges and cleaning the printer.

Replacing Toner Cartridges 5-2
- When a Message Appears 5-2
- Replacing Toner Cartridges 5-4
- Precautions for Handling Toner Cartridges 5-14
- Storing Toner Cartridges 5-16

Calibrating the Printer 5-17
- Performing Calibration Manually 5-17
- Performing Calibration Automatically at the Designated Time 5-18
- Automatically Performing Calibration Periodically 5-20

Cleaning the Fixing Roller 5-22

Cleaning the Outside of the Printer 5-24

Moving the Printer 5-27

Handling the Printer 5-35

Replacing Toner Cartridges

This section describes how to replace or handle toner cartridges and precautions on storing them.

Contact the store where you purchased the printer to obtain replacement toner cartridges.

When a Message Appears

Toner cartridges are consumable products. When a toner cartridge is nearing the end of its life, a message will appear in the Printer Status Window. Follow the directions in the message.

Message	When it is Displayed	Contents and Remedies
<The (Toner Color)* toner cartridge needs to be replaced soon.>	When a toner cartridge needs to be replaced soon	- You can continue to print. - Have ready a new toner cartridge of the indicated color. - It is recommended that you replace the toner cartridge before printing a large amount of data.
<Check the Toner Cartridges> <Toner cartridges with print quality that cannot be guaranteed or used toner cartridges that have reached their lifetime may be inserted. Continuing to use these cartridges may cause a malfunction, so replacing these cartridges with new cartridges is recommended. For details, check the [Consumables/Counters] dialog.>	When a toner cartridge has reached the end of its life	- The printer stops printing - You can continue printing for a while by clicking the [Resolve Error] button, however, as this may result in damage to the printer, it is recommended to replace the toner cartridge with a new one. - Replace the toner cartridge of the indicated color with a new one.

Message	When it is Displayed	Contents and Remedies
<Toner Cartridge Replacement Required> <The life of the (Toner Color)* toner cartridge has come to an end. Open the front cover to replace the toner cartridge.>	When a toner cartridge has reached the end of its life	- When the black toner cartridge has reached the end of its life, the printer stops printing, and you cannot continue the job. - When any of the toner cartridges (other than black) has reached the end of its life, you can print only in black and white. - Replace the toner cartridge of the indicated color with a new one.

* Black, yellow, magenta, or cyan will appear in (Toner Color) (More than one color may appear.).

IMPORTANT

If the printing appears faint or inconsistent even when a message does not appear, this may be due to any toner cartridge reaching the end of its life. Do not continue to use the toner cartridge and replace it with new one when there is deterioration in print quality.

NOTE

- The lifetime of the toner cartridges (Canon Genuine Cartridges) used in this printer are as follows. The numbers of the pages are estimated when printing in the following conditions.
  Printing ratio: 5%; Print density: the default; Paper size: A4; Paper type: Plain paper
  For both the toner cartridges that are included with the printer and replacement toner cartridges
  - Black: Approx. 2,500 pages
  - Yellow: Approx. 2,000 pages
  - Magenta: Approx. 2,000 pages
  - Cyan: Approx. 2,000 pages
- Depending on the printing preferences or printing environment such as the intermittency of printing, paper types and paper sizes, the number of pages you can print may be half this number.
- When the toner consumption is low due to low printing ratio, printing of the expected number of print pages may not be able to be achieved. Also, if you print in color, more than one cartridges may reach the end of their life at the same time.
- Even if you print in black and white, this may affect the life of the cartridges of magenta, yellow, and cyan due to the printer structure.
- The [Consumables/Counters] dialog box in the Printer Status Window can be used to estimate when toner cartridges will need to be replaced. The status of each of the color toner cartridges is displayed in the [Consumables/Counters] dialog box. For details on the [Consumables/Counters] dialog box, see "[Consumables/Counters] Menu," on p. 4-91.

Replacing Toner Cartridges

When the message <Toner Cartridge Replacement Required> appears in the Printer Status Window, replace the toner cartridge of the indicated color with a new toner cartridge.

WARNING

Do not throw a used toner cartridge into open flames, as this may cause the toner remaining inside the cartridge to ignite, resulting in burns or a fire.

CAUTION

Take care not to allow the toner to come into contact with your hands or clothing, as this will dirty your hands or clothing. If they become dirty, wash them immediately with cold water. Washing with warm water will set the toner and make it impossible to remove the toner stains.

IMPORTANT

- Dispose of the packing materials according to local regulations.
- Be sure to use only the toner cartridges designed for this printer.

NOTE

- For details on how to handle a toner cartridge, see "Precautions for Handling Toner Cartridges," on p. 5-14.
- The packing materials may be changed in form or position to be placed, or may be added or removed without notice.

1 Open the front cover.

Holding the opening of the front cover, open it gently.

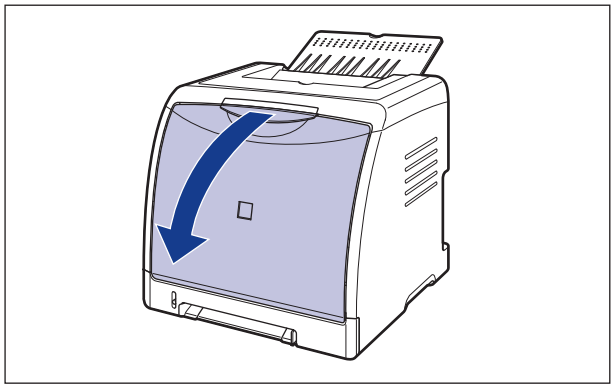

IMPORTANT

The toner cartridges are installed in order of black, yellow, cyan, and magenta from the top as shown in the figure.

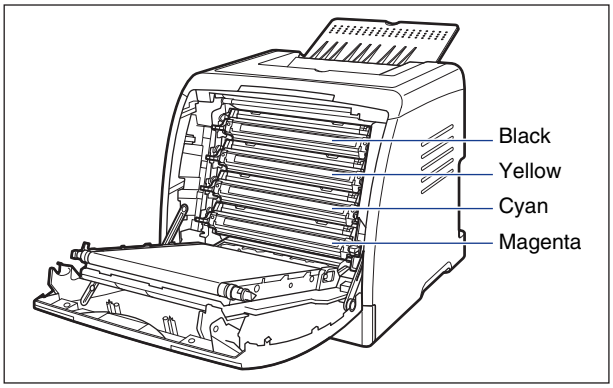

2 Place paper (A4 size paper is recommended) on the transfer belt of the ETB unit (A) as shown in the figure so that the paper is not shifted.

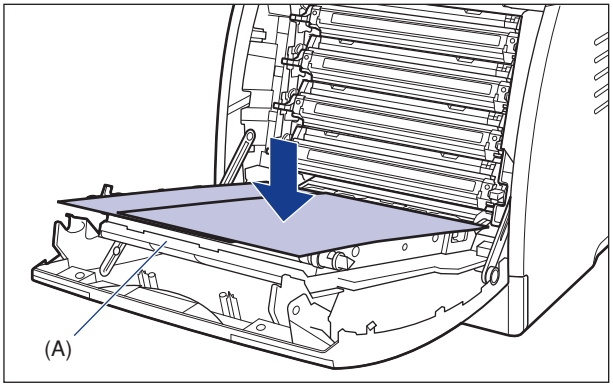

IMPORTANT

- When installing or removing the toner cartridges, be sure to place paper on the transfer belt of the ETB unit to protect the belt.

- Do not place any object on or touch the transfer belt (A) of the ETB unit. The transfer belt of the ETB unit is supplied with a function that cleans itself, therefore, do not clean the belt even when the toner is on it. If the ETB unit is broken or transfer belt is damaged, this may result in misfeeds or deterioration in print quality.

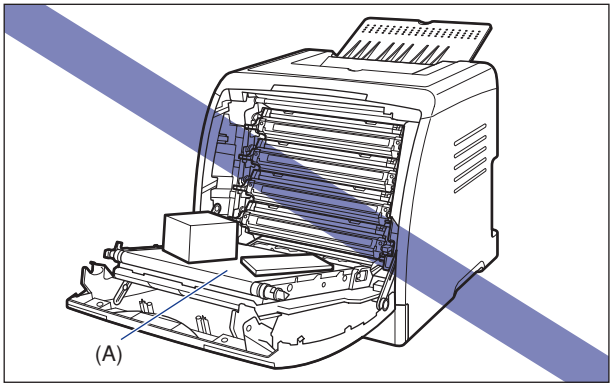

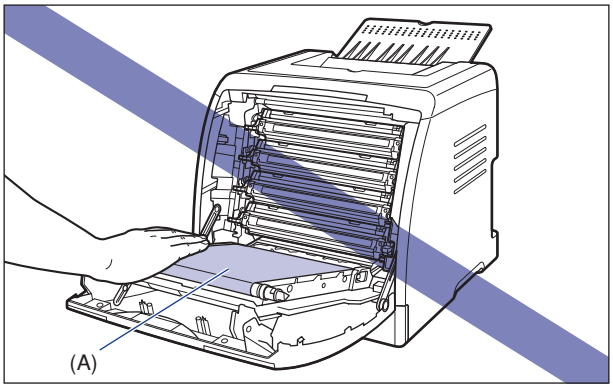

3 Holding the toner cartridge that you want to replace by the blue tabs on the both sides, pull it horizontally.

Because the toner cartridge weighs approximately 0.6 kg, hold it with your both hands firmly so that you do not touch the transfer belt of the ETB unit when pulling the cartridge out.

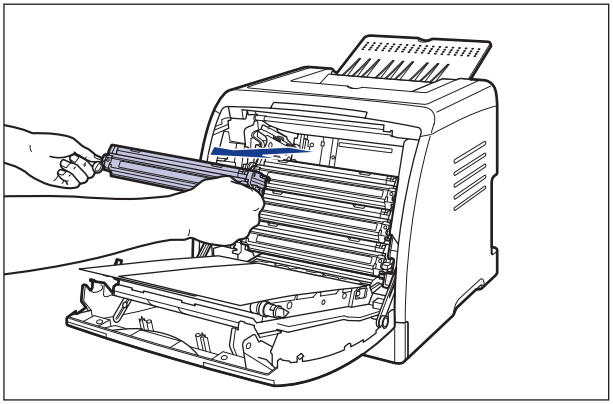

IMPORTANT

Do not touch the high-voltage contact (A) shown in the figure, as this may result in damage to the printer.

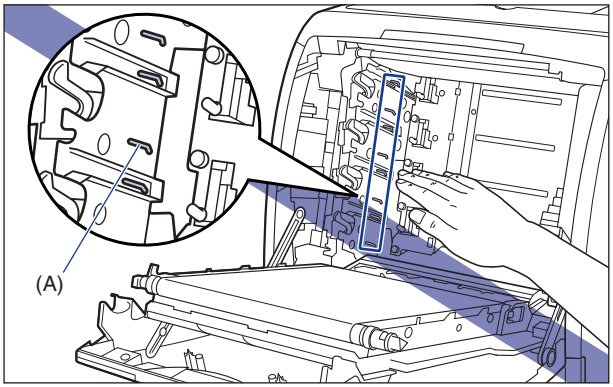

4 Take the new toner cartridge out of the protective bag after taking it out of the package.

There is a cut near the arrow on the protective bag, so you can open it by hand. However, if you cannot open it by hand, use scissors to open the protective bag so as not to damage the toner cartridge.

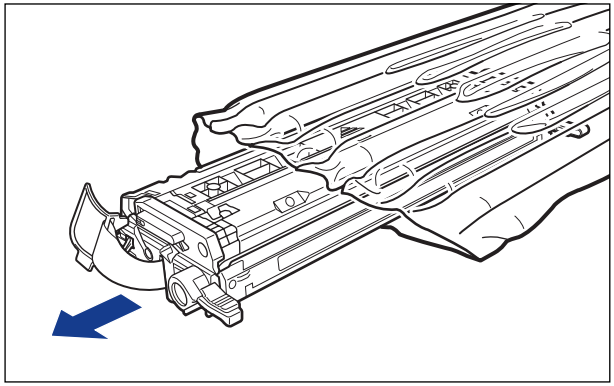

IMPORTANT

Keep the protective bag for the toner cartridge. It may be required after taking out the toner cartridge for printer maintenance.

5 Hold the toner cartridge as shown in the figure, shake it gently 5 or 6 times to evenly distribute the toner inside the cartridge.

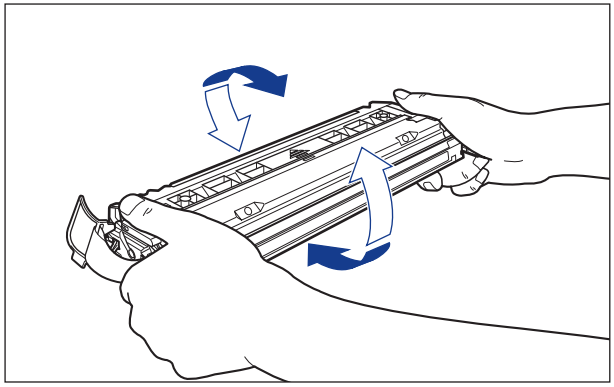

IMPORTANT

- If toner is not distributed evenly, this may result in deterioration in print quality. Be sure to carry out this procedure properly.
- Be sure to shake the toner cartridge gently. If you do not shake the cartridge gently, toner may spill out.

6 Place the toner cartridge on a flat surface ①, detach the tab of the sealing tape from the side of the toner cartridge, and then pull out the sealing tape (approx. 50 cm long) gently while supporting the toner cartridge ②.

Remove the sealing tape by hooking your fingers into the tab and pulling it out straight in the direction of the arrow.

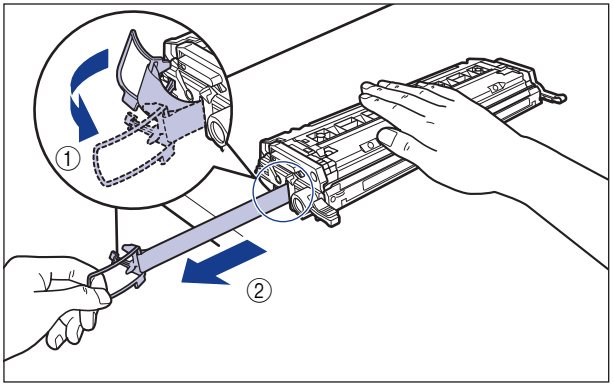

CAUTION

If the sealing tape is pulled out forcefully or stopped at midpoint, toner may spill out. If the toner gets into your eyes or mouth, wash them immediately with cold water and immediately consult a physician.

IMPORTANT

- Do not pull the sealing tape diagonally, upwards, or downwards. If the tape is severed, it may become difficult to pull out completely.

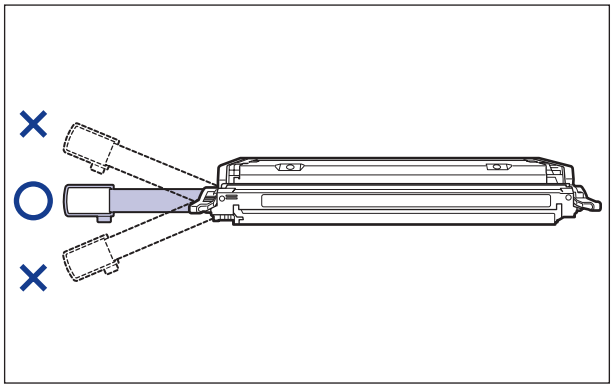

- Pull out the sealing tape completely from the toner cartridge. If any tape remains in the toner cartridge, this may result in poor print quality.

- When pulling out the sealing tape, be careful not to hold the drum protective shutter (A) with your hands.

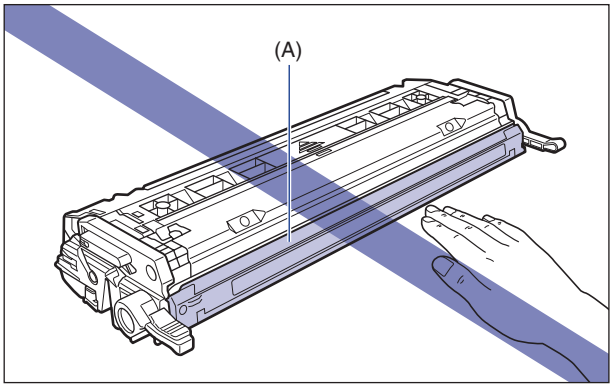

7 Hold the toner cartridge properly with the arrowed side facing up as shown in the figure.

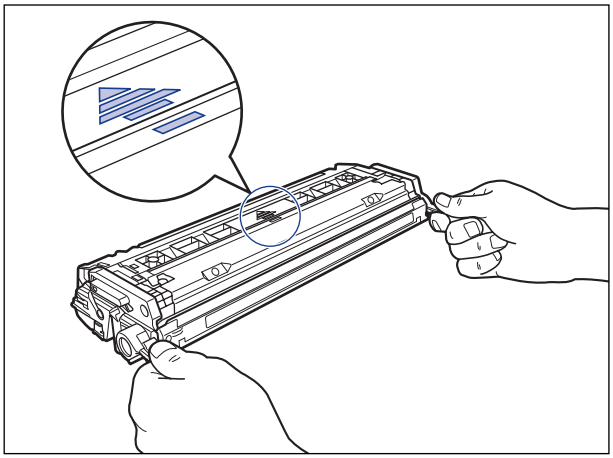

IMPORTANT

Do not hold the toner cartridge in a manner that is not directed in this procedure.

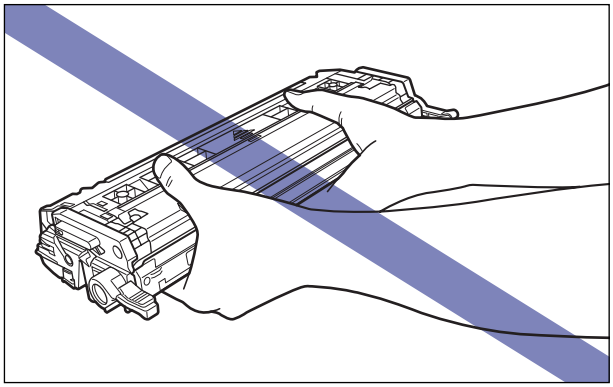

8 Hold the toner cartridge with both hands and install it into the printer.

Align (A) of the toner cartridge with the slots (B) to which the label of the same color is attached, then insert the cartridge until it stops.

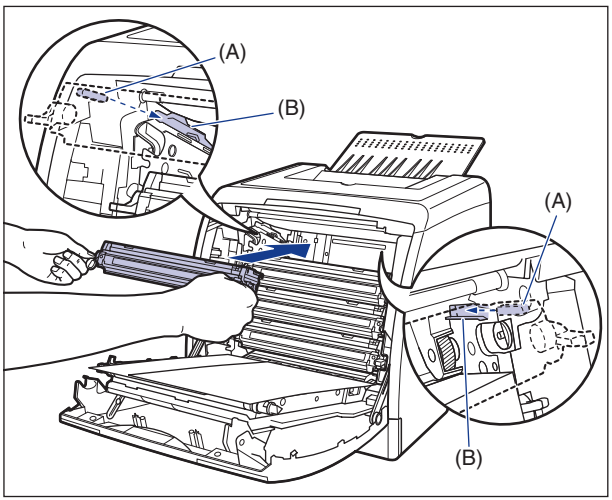

IMPORTANT

Be sure to install the toner cartridge by pushing it firmly. If the toner cartridges are not installed firmly, this may result in deterioration in print quality.

9 Remove the paper.

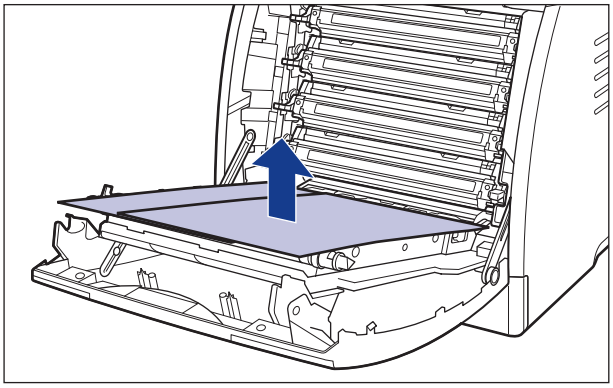

IMPORTANT

When removing the paper, be careful not to touch or damage the transfer belt of the ETB unit.

10 Close the front cover.

Holding the opening of the front cover, close it gently.

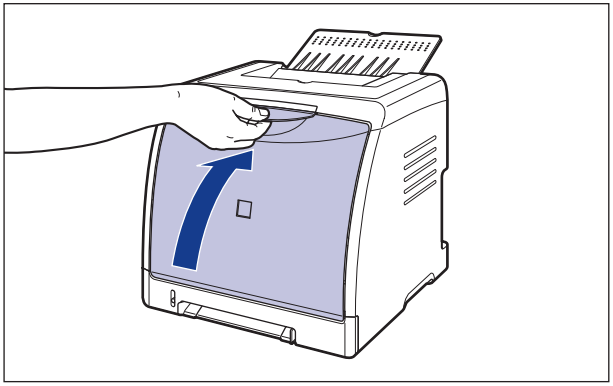

CAUTION

When closing the front cover, be careful not to catch your fingers.

IMPORTANT

Do not leave the front cover open for a long time after installing the toner cartridge.

Precautions for Handling Toner Cartridges

A toner cartridge consists of light-sensitive components and intricate mechanical components. Handling the toner cartridge without due care may lead to damage to the toner cartridge or deterioration in print quality. Be careful of the following points when removing or installing the toner cartridge.

WARNING

Do not throw a used toner cartridge into open flames, as this may cause the toner remaining inside the cartridge to ignite, resulting in burns or a fire.

CAUTION

Take care not to allow the toner to come into contact with your hands or clothing, as this will dirty your hands or clothing. If they become dirty, wash them immediately with cold water. Washing with warm water will set the toner and make it impossible to remove the toner stains.

IMPORTANT

- When you take the toner cartridge out of the printer for servicing the printer, place the toner cartridge into the original protective bag, or wrap it with a thick cloth immediately.
- When replacing a toner cartridge, be sure to replace the toner cartridge of the same color.
- Do not expose the toner cartridge to direct sunlight or strong light.
- Print quality may deteriorate if you touch or damage the photosensitive drum inside the toner cartridge. Be sure not to touch or open the drum protective shutter (A). Also, be careful not to hold or touch areas that are not specified in this procedure, such as the electrical contacts (B) or sensor (C). This may result in damage to the cartridge.

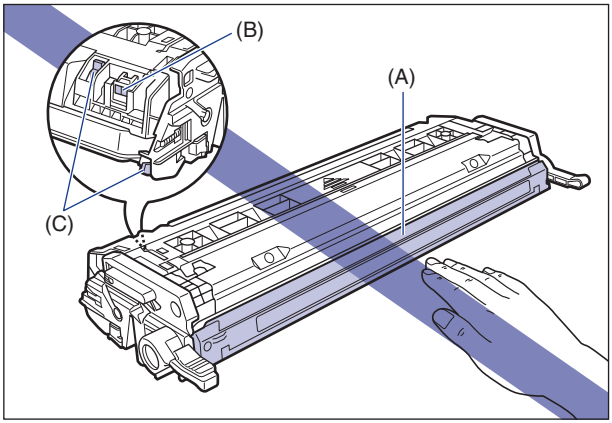

- Do not jolt the toner cartridge memory (D) or bring it near a magnetic field. This may result in damage to the cartridge.

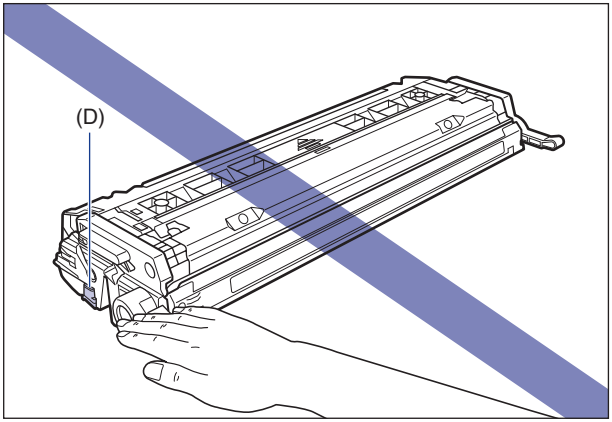

- When handling a toner cartridge, hold it properly as shown in the figure and handle it with the arrowed side facing up. Do not place it vertically or upside-down.

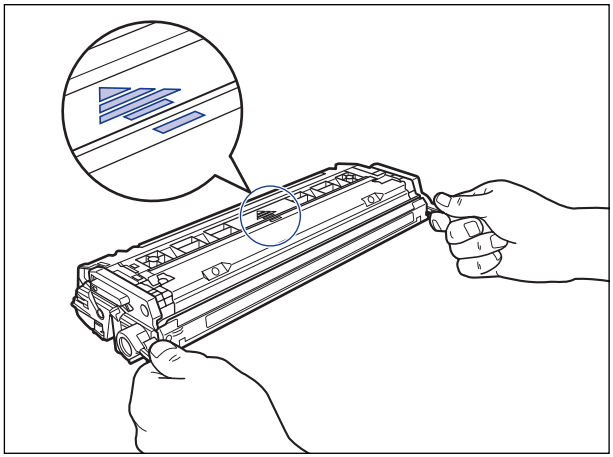

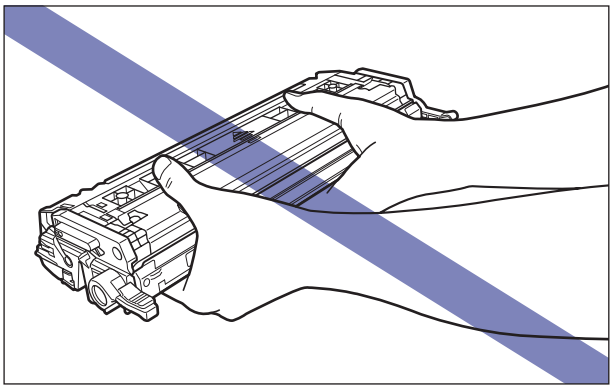

- Do not attempt to disassemble or modify the toner cartridge.
- Condensation may form in and on a toner cartridge if it is brought into an environment that exposes it to sudden changes in temperature and/or humidity. If you move the toner cartridge to a location that is warmer or has higher humidity, leave the cartridge in the new location for 2 hours or longer without opening the protective bag to allow it to adjust to the new temperature.
- Be sure to use new toner cartridges before the expiration date indicated on the package.
- Keep the toner cartridge away from products that generate magnetic waves, such as a display or computer.

Storing Toner Cartridges

Be careful of the following points when storing a new toner cartridge or handling a toner cartridge that has been taken out of the printer for maintenance or moving the printer.

IMPORTANT

- Do not take a new toner cartridge out of the protective bag until it is ready to be used.
- When you take the toner cartridge out of the printer for servicing the printer or other purposes, place the toner cartridge into the original protective bag, or wrap it with a thick cloth immediately.
- Do not place it vertically or upside-down. Store the toner cartridge in the same orientation as when installed in the printer.
- Do not store the toner cartridge in a place exposed to direct sunlight.
- Do not store cartridges in a hot or humid place, or a place where the temperature and humidity can change significantly.
  Storing environment temperature: 0 to 35°C (32 to 95°F)
  Storing humidity range: 35 to 85% RH (no condensation)
- Do not store the toner cartridge in a place where corrosive gases, such as ammonia, are generated, or where a considerable amount of salt is contained in the air, or where there is a lot of dust.
- Keep the toner cartridge out of the reach of small children.

■ Condensation

Even within the storable humidity range, water droplets may develop both inside and outside of the toner cartridge due to the difference in temperature. The development of water droplets is called condensation. Condensation will adversely affect the quality of the toner cartridge.

Calibrating the Printer

Perform calibration when the colors have changed and the data is not printed in the correct colors (specified colors) or a color deviation occurs. You can perform calibration manually or automatically at the designated time everyday. When data is not sent from the computer or when the printer status remains as it is longer than the fixed period, the printer can automatically perform calibration periodically.

NOTE

Calibration takes approximately 180 seconds.

Performing Calibration Manually

Perform calibration manually using the following procedure.

IMPORTANT

If you perform calibration frequently, this may affect the life of the toner cartridges.

1 Display the Printer Status Window.

For details on methods for displaying the Printer Status Window, see "Displaying the Printer Status Window," on p. 4-88.

2 From the [Options] menu in the Printer Status Window, select [Utility] → [Calibration].

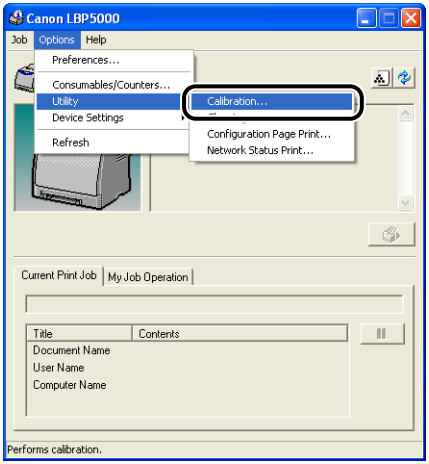

A confirmation message is displayed.

3 Click [OK].

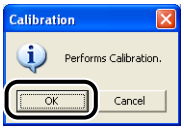

Performing Calibration Automatically at the Designated Time

Perform calibration automatically at the designated time using the following procedure.

IMPORTANT

When the time specified in the [Calibration Settings] dialog box has come within 30 minutes after performing calibration last time, another calibration is not performed.

1 Display the Printer Status Window.

For details on methods for displaying the Printer Status Window, see "Displaying the Printer Status Window," on p. 4-88.

2 From the [Options] menu in the Printer Status Window, select [Device Settings] → [Calibration Settings].

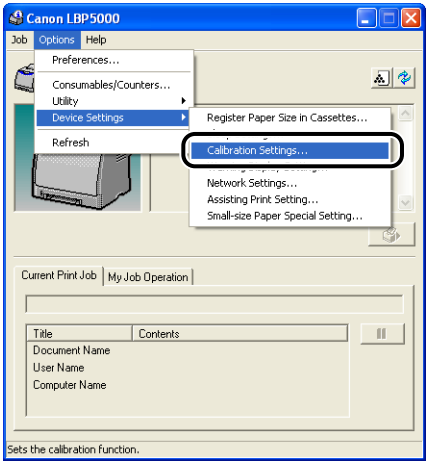

3 Select the [Use Periodical Calibration Timer] check box in the [Calibration Settings] dialog box, then specify the time to perform calibration in [Time].

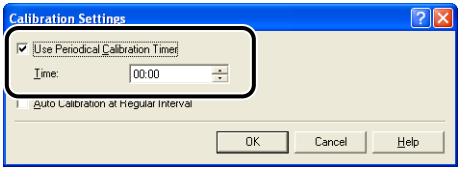

4 Click [OK].

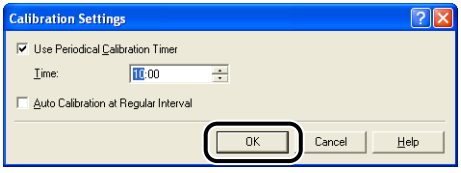

Automatically Performing Calibration Periodically

When data is not sent from the computer or when the printer status remains as it is longer than the fixed period, the printer can automatically perform calibration periodically.

IMPORTANT

- The printer does not perform calibration while it is in the sleep state.
- If you perform calibration frequently, this may affect the life of the toner cartridges.

1 Display the Printer Status Window.

For details on methods for displaying the Printer Status Window, see "Displaying the Printer Status Window," on p. 4-88.

2 From the [Options] menu in the Printer Status Window, select [Device Settings] → [Calibration Settings].

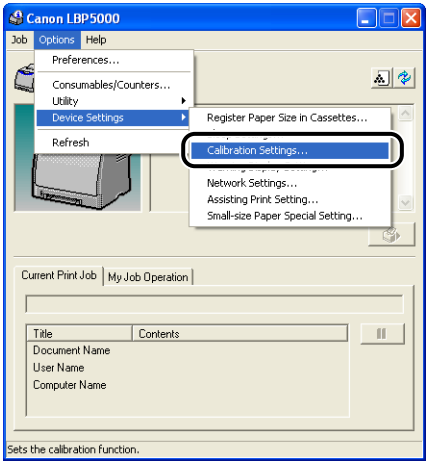

3 Select the [Auto Calibration at Regular Interval] check box in the [Calibration Settings] dialog box.

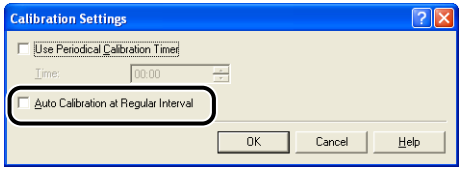

4 Click [OK].

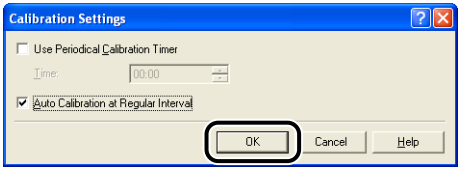
Calibration Settings
Use Periodical Calibration Timer
Time:
00:00
Auto Calibration at Regular Interval
OK
Cancel
Help

Cleaning the Fixing Roller

When the front or back of the printed paper has smudge marks, clean the fixing roller using the following procedure. Print quality deterioration can be prevented by cleaning the fixing roller.

IMPORTANT

The cleaning page cannot be printed on any paper other than A4. Be sure to use A4 size paper.

1 **Load A4 size paper in the manual feed slot.**

2 **Display the Printer Status Window.**

For details on methods for displaying the Printer Status Window, see "Displaying the Printer Status Window," on p. 4-88.

3 **From the [Options] menu in the Printer Status Window, select [Utility] → [Cleaning].**

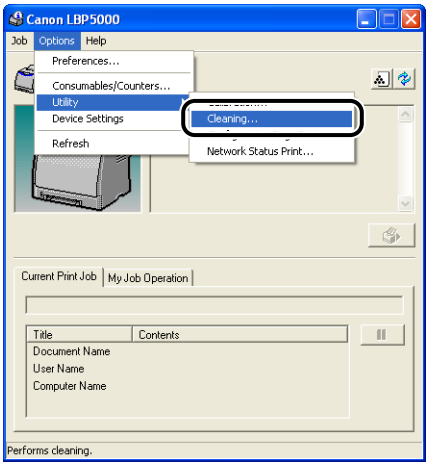

A confirmation message is displayed.

4 Click [OK].

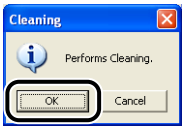

The cleaning page is printed.

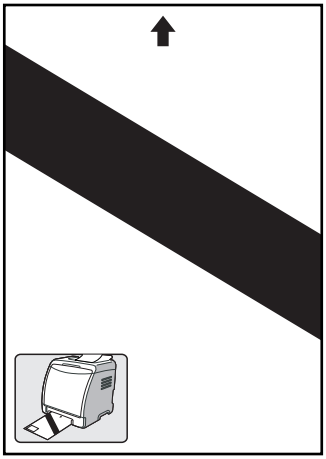

5 Load the cleaning page in the manual feed slot with the printed side facing up.

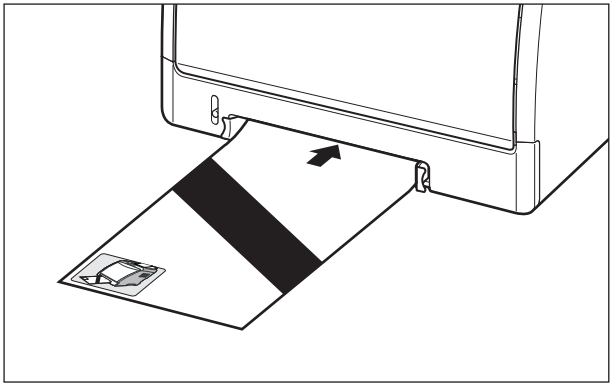

The paper is fed into the printer slowly, and the printer starts cleaning the fixing roller.

NOTE

- Cleaning takes approximately 90 seconds.
- The cleaning process cannot be canceled. Please wait until it is completed.

Cleaning the Outside of the Printer

Periodically clean the outer surfaces and ventilation slots of the printer to maintain the optimal printing quality. When cleaning the printer, be careful of the following points in order to prevent an electrical shock or printer malfunctions.

WARNING

- **When cleaning the printer, turn OFF the main power switch, and then unplug the power plug. Failure to observe these steps may result in a fire or electrical shock.**
- **Do not use alcohol, benzene, paint thinner, or other flammable substances. If flammable substances come into contact with electrical parts inside the printer, it may result in a fire or electrical shock.**

IMPORTANT

- Be careful not to use a cleaning agent other than water or a mild detergent diluted with water, as this may deform or crack the plastic materials in the printer.
- When using a mild detergent, be sure to dilute it with water.
- Grease or oil does not have to be applied to this printer. Be sure not to apply grease or oil.

1 Turn the printer and computer OFF ①, remove the USB cable ②, and then disconnect the power plug from the AC power outlet ③.

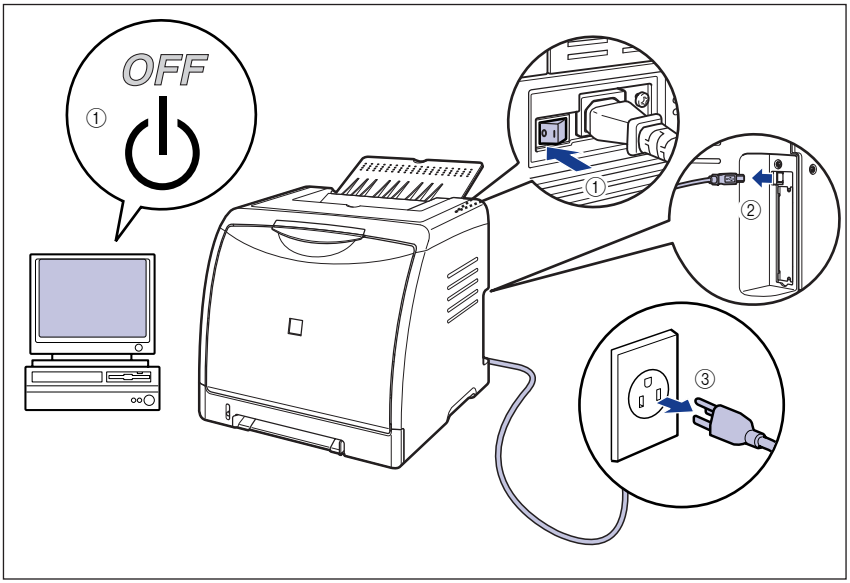

2 Firmly wring a soft cloth dampened with water or a mild detergent diluted with water, and wipe off the dirt.

If you use a mild detergent for cleaning, be sure to wipe away the detergent with a soft cloth dampened with water.

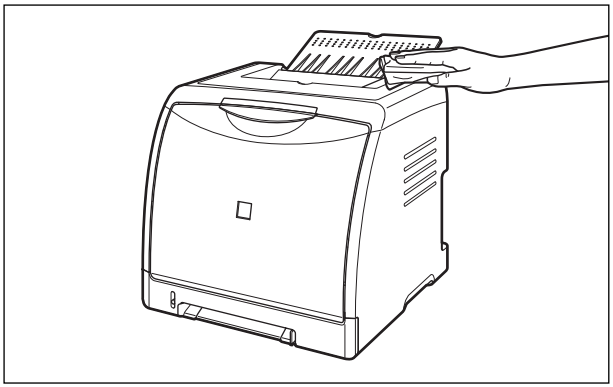

3 **After wiping off the dirt, wipe the printer with a dry cloth.**

4 **When the printer is completely dry, plug the power plug into the AC power outlet, and then connect the USB cable.**

Moving the Printer

When changing the location of the printer or moving the printer for maintenance, be sure to perform the following procedure.

IMPORTANT

Make sure that the front cover and output tray are closed before carrying the printer.

NOTE

For details on the installation site, see "Getting Started Guide".

1 **Turn the printer and computer OFF ①, remove the USB cable ②, and then disconnect the power plug from the AC power outlet ③.**

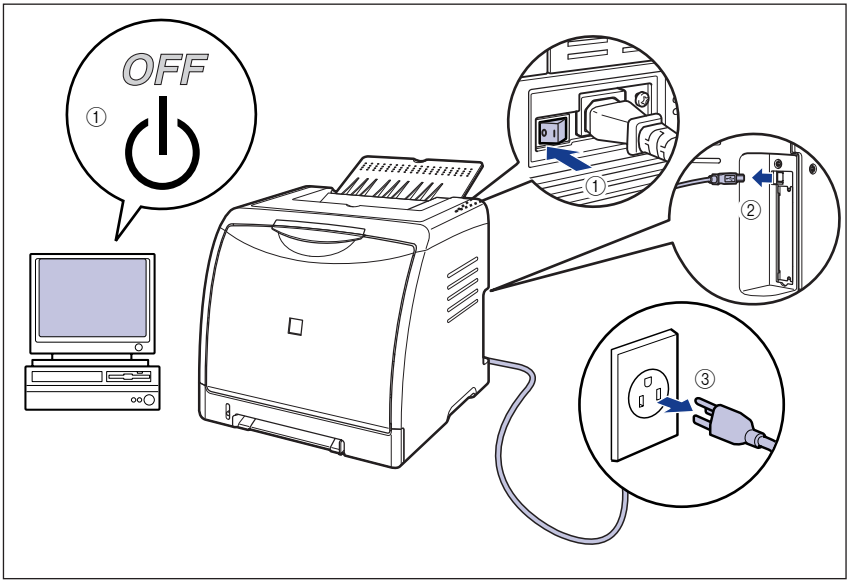

WARNING

Be sure to turn the printer and computer OFF, unplug the power plug, and then disconnect all the interface cables from the printer before moving the printer. Otherwise, the power cord or interface cables may be damaged, resulting in a fire or electrical shock.

2 **Remove all the interface cables and the power cord from the printer.**

3 **Close the output tray.**

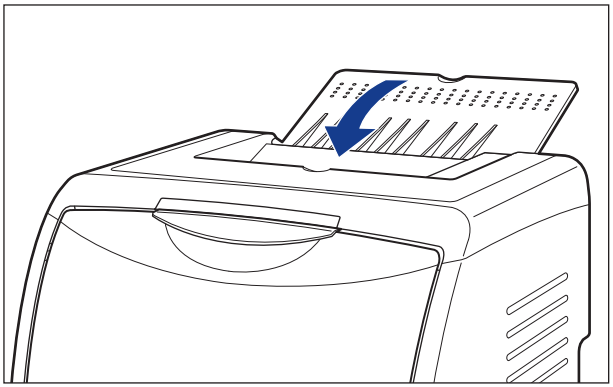

4 **Pull out the paper cassette.**

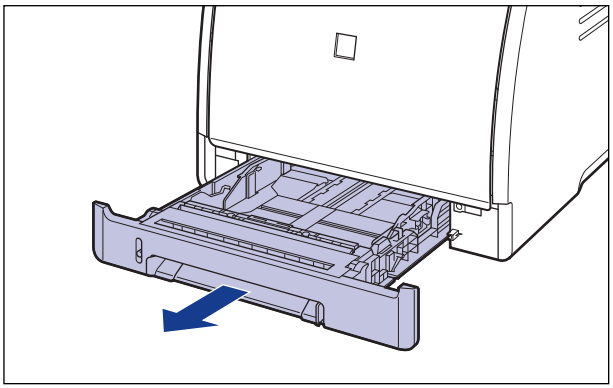

5 Remove the cassette protective cover.

Pressing the right side of the cassette protective cover ①, remove it ②.

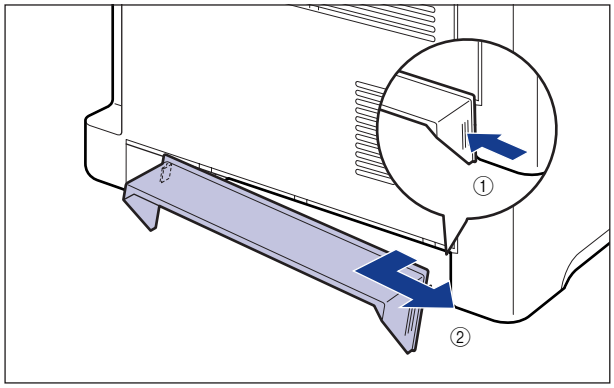

6 Move the printer unit from the installation site.

From the front side, securely hold the printer by the lift handles located on the lower portion of the printer with both hands.

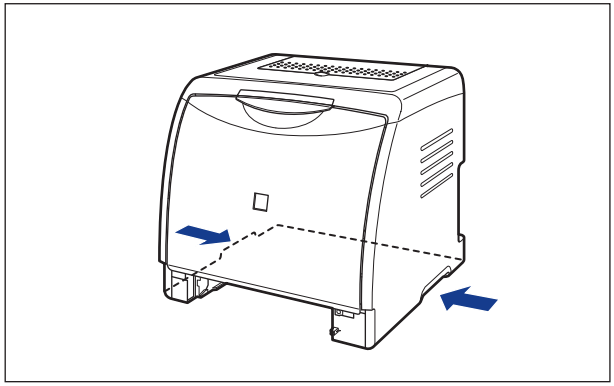

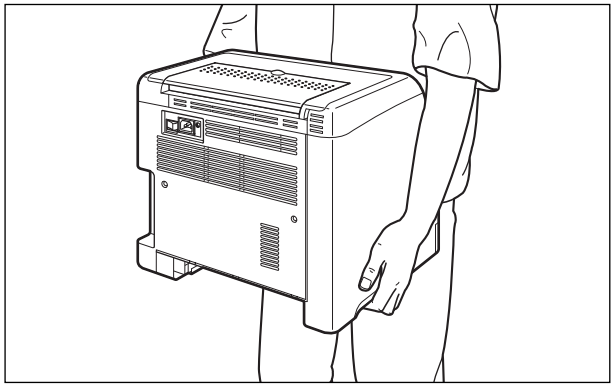

CAUTION

- **This printer weighs approximately 17.1 kg without the paper cassette and cassette protective cover installed (Printer Unit: approx. 14.7 kg; Toner Cartridge x 4: approximately 2.4 kg). Please be careful not to hurt your back or other portions of your body when carrying the printer.**
- **Be sure not to hold the printer by the front panel, delivery slots, or any portions other than the lift handles. If you do so, you may drop the printer, resulting in personal injury.**

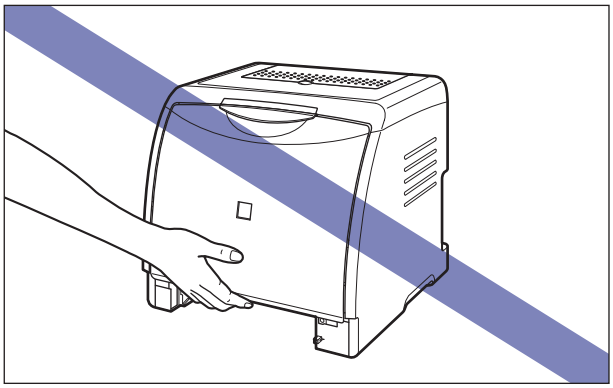

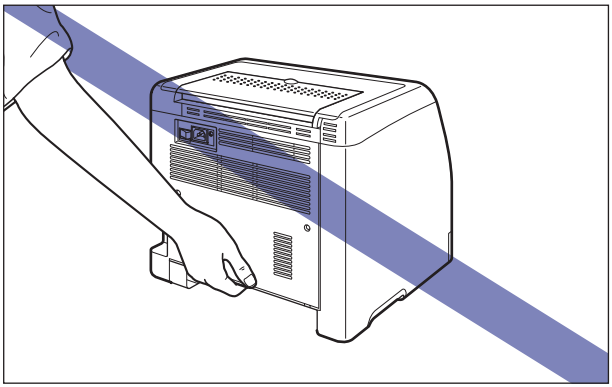

- **The front portion of the printer (A) is relatively heavy. Be careful not to get off-balanced when lifting the printer. If you do so, you may drop the printer, resulting in personal injury.**

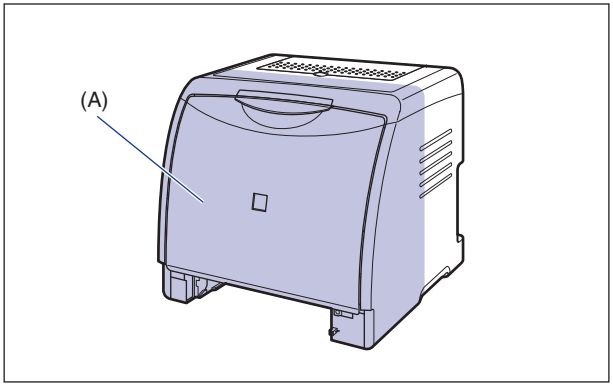

- **Be sure to hold the printer from the front side when carrying it. If you hold the printer from the rear side, you may get off-balanced and drop the printer, resulting in personal injury.**

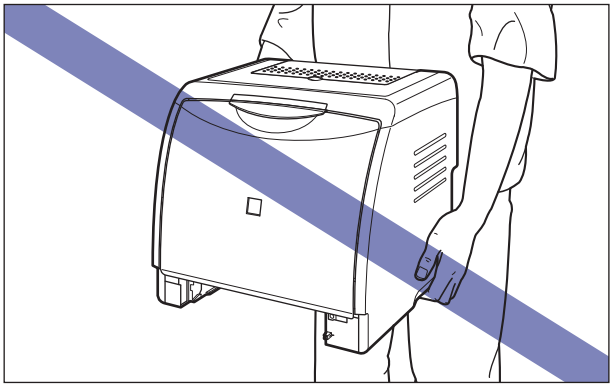

- **Do not carry the printer with the paper cassette attached. If you do so, the paper cassette may drop resulting in personal injury.**

- **Do not carry the printer with the paper feeder installed. If you do so, the paper feeder may drop resulting in personal injury.**

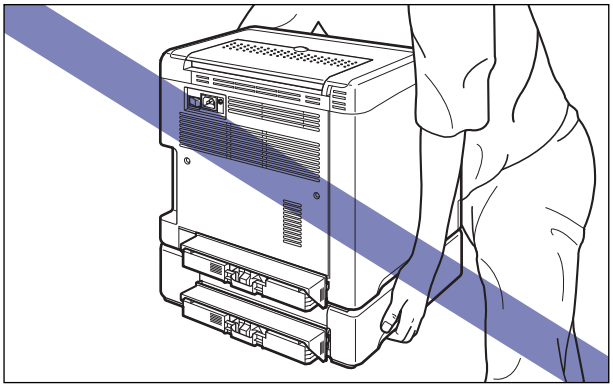

NOTE

If the optional paper feeder was previously installed in the printer, place the paper feeder on the new installation site before carrying the printer to the site. For details on the procedure for installing the paper feeder, see "Installing the Paper Feeder," on p. 6-14.

7 Put the printer down carefully at the new installation site.

CAUTION

Put the printer down slowly and carefully. Be careful not to hurt your hands.

IMPORTANT

Secure sufficient space around the printer at the installation site so that you can install the optional accessories and connect cables.

8 Install the cassette protective cover.

Install the left side of the cassette protective cover ① on the printer, then while pressing the right side of the cover ②, insert the cover into the back of the printer ③ as shown in the figure.

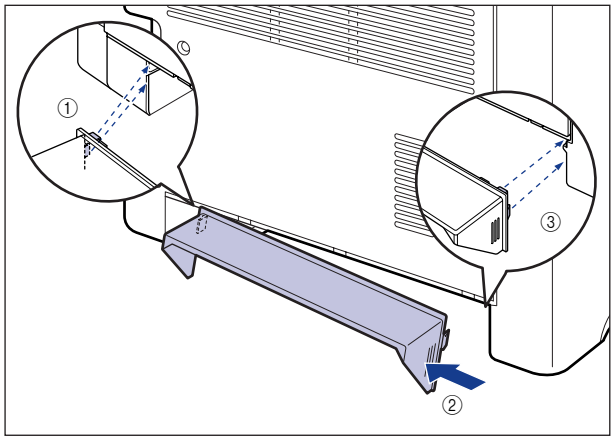

9 Set the paper cassette in the printer.

Push the paper cassette into the printer firmly until the front side of the cassette is flush with the front surface of the printer.

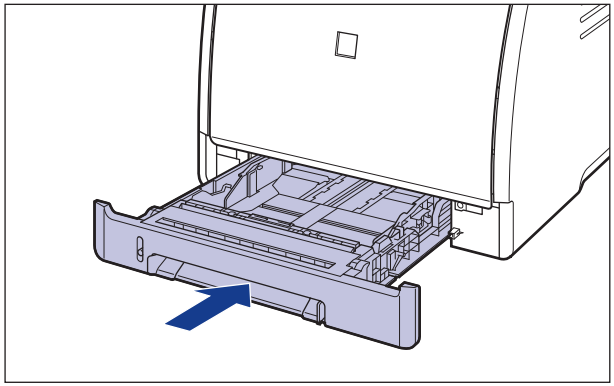

10 Open the output tray.

11 Connect the interface cables except for the USB cable, and connect the power cord.

12 Plug the power plug into the AC power outlet.

13 Connect the USB cable.

● Transporting the Printer

When transporting the printer for reasons such as relocating, remove the toner cartridges and store the printer and the parts in the package that they came in with the packing materials attached in order to prevent them from being damaged while being transported.
If the original package and packing materials are not available, find an appropriate box and packing materials and pack the printer and the parts appropriately.

Handling the Printer

This printer consists of various electronic and precise optical parts. Read the following section so that you can handle the printer properly.

IMPORTANT

- For details on how to handle the printer, also read "Important Safety Instructions" (See p. xvi).
- Do not place any heavy objects on the printer, trays, or covers. This may result in damage to the printer.

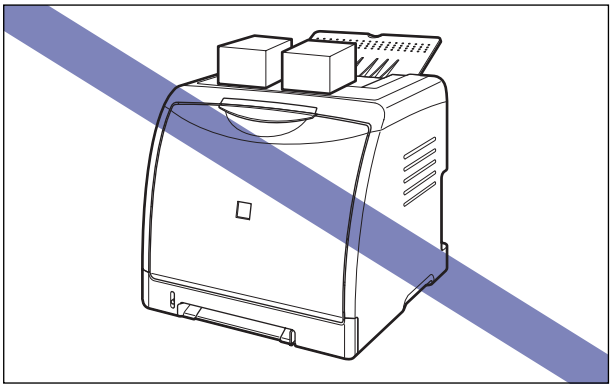

- Do not leave the front cover open longer than required. Exposing the printer to direct sunlight or strong light may result in deterioration in print quality.
- Avoid vibration while the printer is printing. This may result in deterioration in print quality.

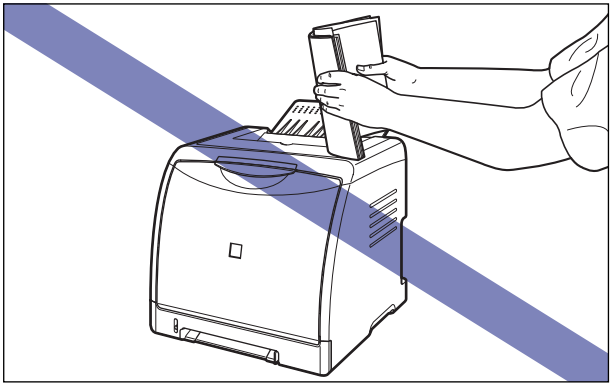

- Be sure not to open the covers on the printer during printing. This may result in damage to the printer.

- Handle the front cover and output tray gently when opening or closing them. Failure to do so may result in damage to the printer.
- If you want to spread a blanket on the printer to prevent dust from entering the printer, turn the power OFF and allow the printer to cool down sufficiently before covering the printer.
- If you do not plan to use the printer for a long period of time, unplug the power plug from the AC power outlet.
- Do not use or store the printer in a room where chemicals are used.

Optional Accessories

6
CHAPTER

This chapter describes the procedures for installing the optional accessories on the printer.

Optional Accessories 6-2
Paper Feeder 6-2
Network Board 6-3
Paper Feeder 6-4
Installation Space 6-5
Removing the Packing Materials 6-6
Moving the Printer 6-10
Installing the Paper Feeder 6-14
Removing the Paper Feeder 6-18
Network Board 6-20
Parts and Their Functions 6-21
Installing the Network Board 6-22
Setting the Network Board 6-26
Problems on Installing the Network Board 6-29
Resetting the Network Board 6-31
Removing the Network Board 6-33

Optional Accessories

The following optional accessories are available in order to use this printer to its full extent. Purchase them to fulfill your needs. For the optional accessories, contact your local authorized Canon dealer.

Paper Feeder

This printer is supplied with 2 paper sources: the paper cassette and manual feed slot. By installing the optional paper feeder, up to 3 paper sources can be used.

The paper feeder unit PF-92 consists of a paper feeder and paper cassette.

The paper cassette can be loaded with up to approximately 250 sheets of plain paper (64 g/m^2) at sizes of A4, B5, A5, Legal, Letter, Executive, Envelope, Index Card, and paper at the following custom paper sizes.

- Width 76.2 mm to 215.9 mm; Length 127.0 mm to 355.6 mm

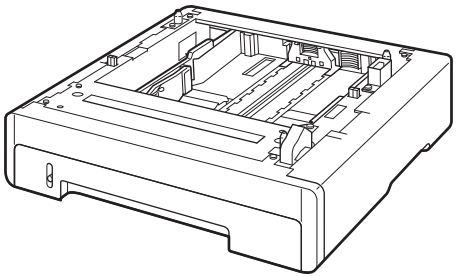

Paper Feeder Unit PF-92

NOTE

- The paper feeder is designed for LBP5000. You cannot use a paper feeder designed for other models.
- For details on the procedure for installing the paper feeder, see "Paper Feeder," on p. 6-4.

Network Board

The network board fits inside the printer and is compatible with the TCP/IP protocol for connecting the printer to LAN. The network board enables the operation of the printer using a built-in web browser "Remote UI" allowing you to specify settings and manage the printer from a computer on the network. Also, you can use "NetSpot Device Installer" and "NetSpot Console" that configure and manage a printer connected to a network on a computer.

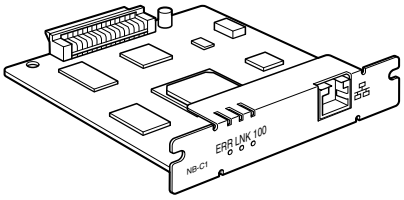

Network board (NB-C1)

NOTE

- For details on "Remote UI", see "Remote UI Guide".
- For more details on "NetSpot Device Installer", see "Network Guide". For details on "NetSpot Console", see "NetSpot Console User's Guide".
- For details on the procedure for installing the network board, see "Network Board," on p. 6-20.

Paper Feeder

The paper feeder is to be installed at the bottom of the printer unit.

Make sure that all the following items are contained in the package before installing the paper feeder. If any item is missing or damaged, please contact your local authorized Canon dealer.

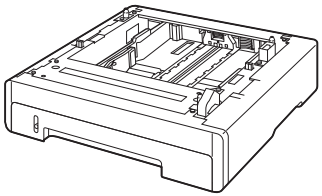

Paper Feeder Unit PF-92

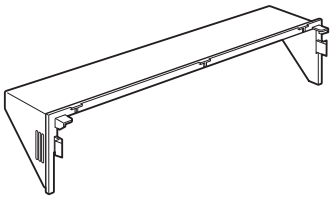

Cassette protective cover

WARNING

Be sure to turn the printer OFF, unplug the power plug, and then disconnect all the interface cables and power cord from the printer before installing the paper feeder. Otherwise, the power cord or interface cables may be damaged, resulting in a fire or electrical shock.

IMPORTANT

- Do not touch the connector (A) in the paper feeder. This may result in damage to the printer or misfeeds.

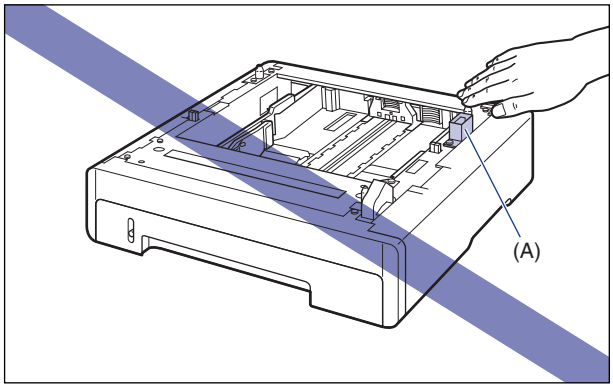

- If you are printing from Cassette 2, make sure that Cassette 1 is set before printing. If you print from Cassette 2 when Cassette 1 is not set, this will cause paper jams.

NOTE

Load paper in the paper feeder in the same manner as you load paper in Cassette 1. For more details, see "Chapter 2 Loading and Outputting Paper".

Installation Space

The dimensions of each part, foot positions, and the space required for using the printer with the paper feeder installed are indicated in the following figures:

Dimensions of the Printer

Front Surface

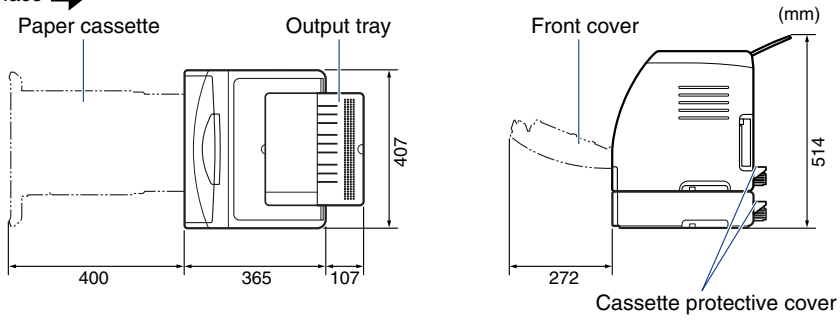

Required Peripheral Space

Front Surface

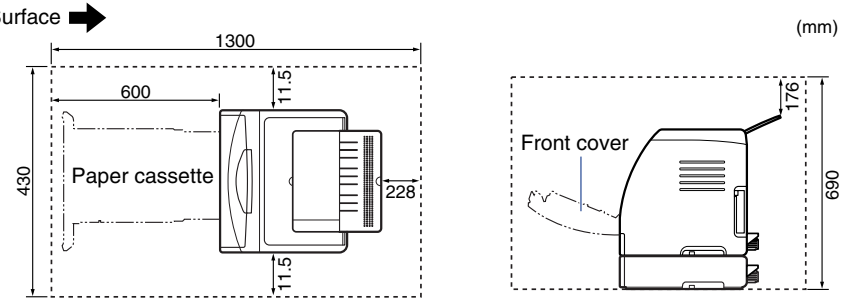

Foot Positions of the Paper Feeder

Front Surface

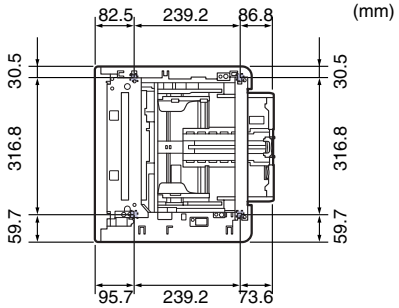

The right feet are 3.1 mm high and their top surface is 17.3 mm square.
The left feet are 2.5 mm high and their top surface is 17.3 mm square.

Removing the Packing Materials

The paper feeder is provided with tape and a packing material to be protected from excessive vibrations and shocks during delivery. Remove the tape and packing material before installing the paper feeder on the printer.

IMPORTANT

- If there is any packing material remaining inside the paper feeder, this may result in misfeeds or damage to the printer when operating the printer. Be sure to remove all the packing materials following the procedure.
- The removed packing materials are required when transporting the printer for relocation or maintenance. Keep them where they will not get lost.

NOTE

The packing materials may be changed in form or position to be placed, or may be added or removed without notice.

1 **Remove the tape that is securing the connector.**

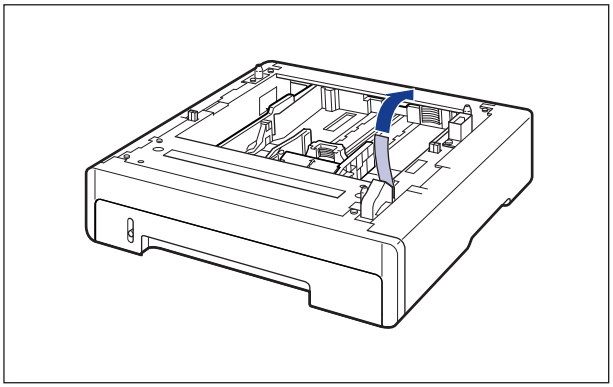

2 Pull out the paper cassette.

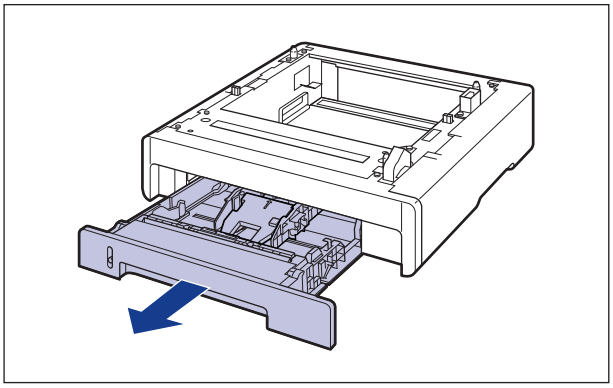

IMPORTANT

Do not touch the rubber pad (A) in the paper cassette. This may result in misfeeds.

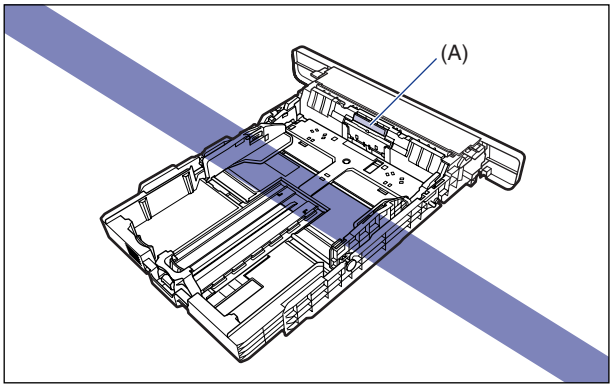

3 While holding the lock release lever of the side paper guides, slide the paper guides.

The side paper guides move together.

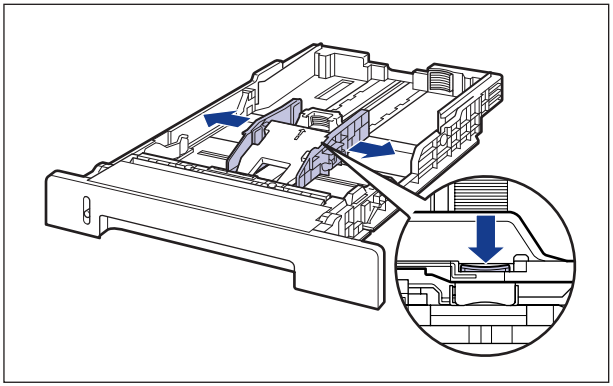

4 While holding the lock release lever of the rear paper guide, slide the paper guide.

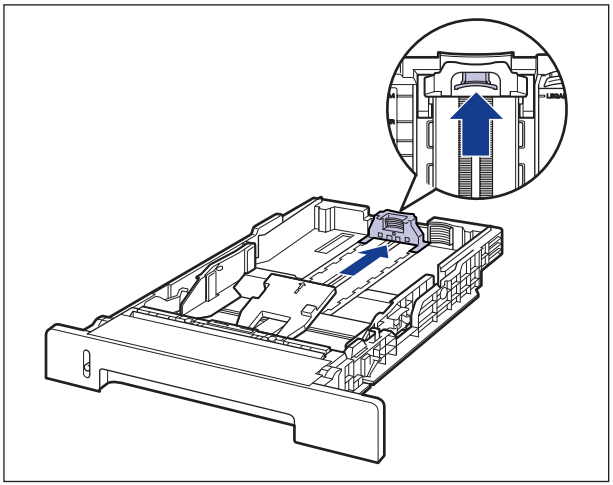

5 While pressing down the plate ①, remove the packing material ②.

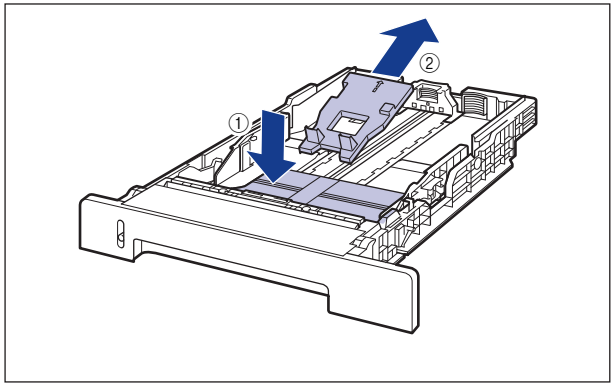

IMPORTANT

The paper cassette is provided with the packing materials. Be sure to take out the paper cassette to remove the packing materials.

6 Set the paper cassette in the paper feeder.

Push the paper cassette into the paper feeder firmly until the front side of the cassette is flush with the front surface of the paper feeder.

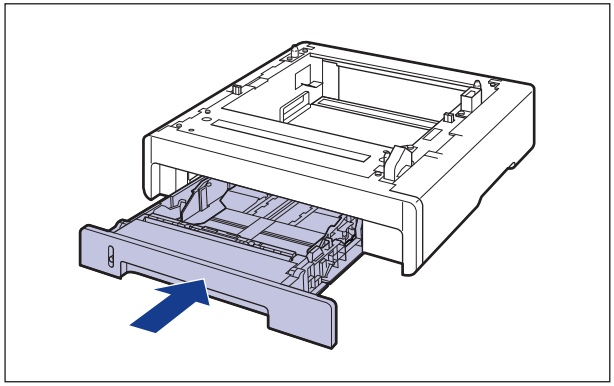

Moving the Printer

When installing the paper feeder in the printer after installing the printer, move the printer to an appropriate location temporarily using the following procedure.

WARNING

Be sure to turn the printer and computer OFF, unplug the power plug, and then disconnect all the interface cables from the printer before moving the printer. Otherwise, the power cord or interface cables may be damaged, resulting in a fire or electrical shock.

CAUTION

Do not carry the printer with the paper cassette attached. If you do so, the paper cassette may drop resulting in personal injury.

1 **Turn the printer and computer OFF ①, remove the USB cable ②, and then disconnect the power plug from the AC power outlet ③.**

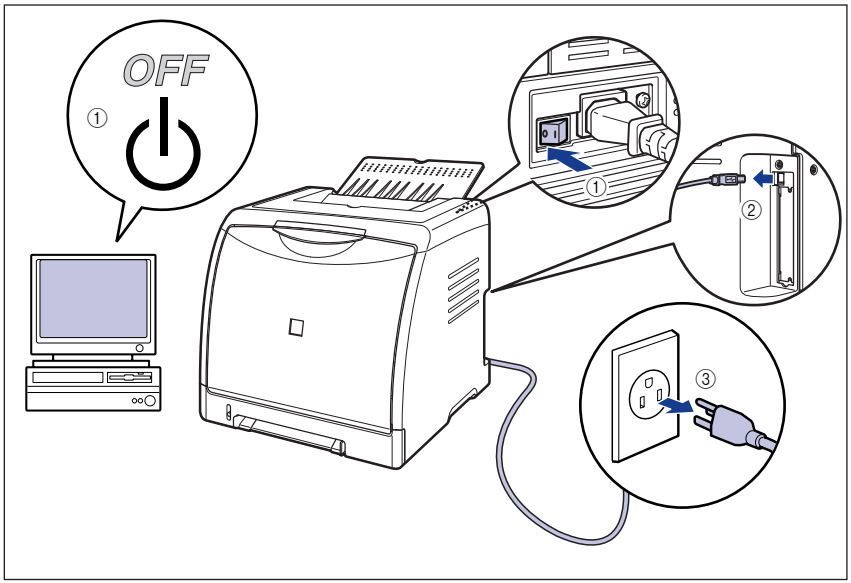

2 **Remove all the interface cables and the power cord from the printer.**

3 Close the output tray.

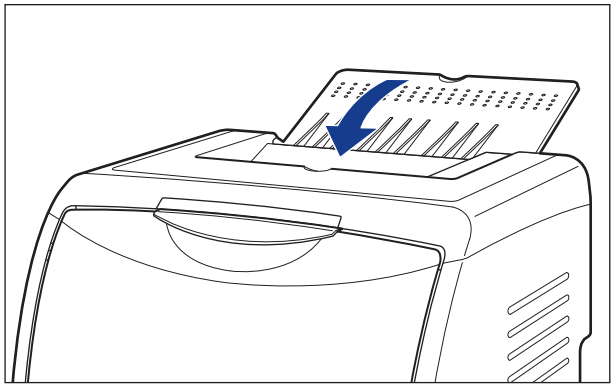

4 Pull out the paper cassette.

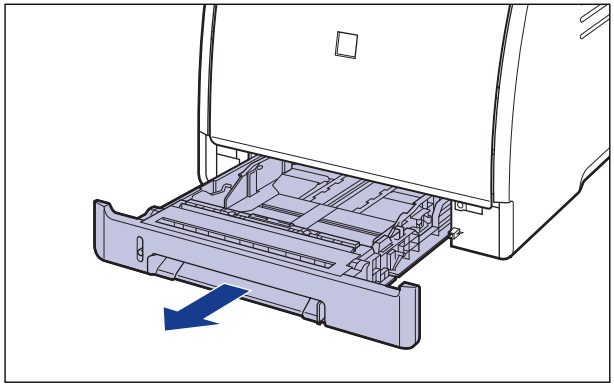

5 Remove the cassette protective cover.

Pressing the right side of the cassette protective cover ①, remove it ②.

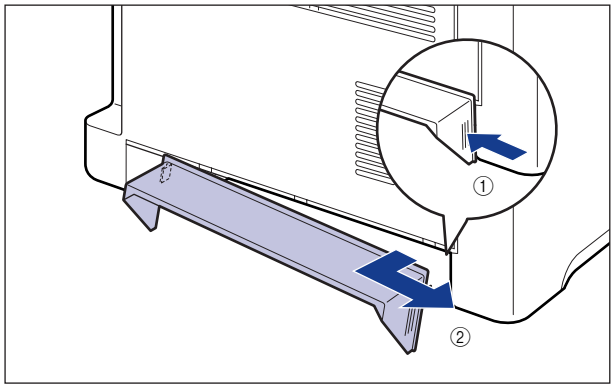

6 Move the printer unit from the installation site.

From the front side, securely hold the printer by the lift handles located on the lower portion of the printer with both hands.

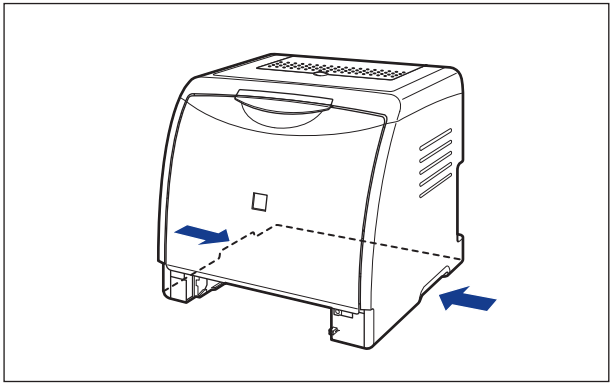

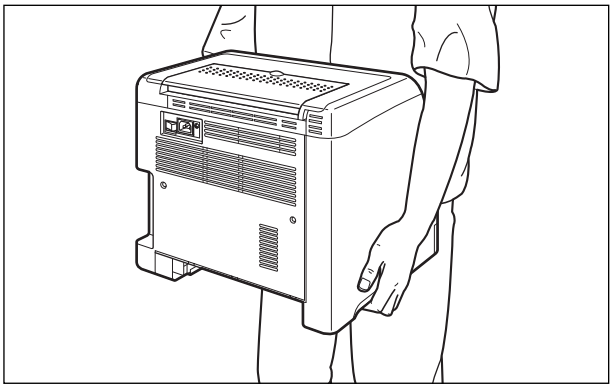

CAUTION

- **This printer weighs approximately 17.1 kg without the paper cassette and cassette protective cover installed (Printer Unit: approx. 14.7 kg; Toner Cartridge x 4: approximately 2.4 kg). Please be careful not to hurt your back or other portions of your body when carrying the printer.**

- **Be sure not to hold the printer by the front panel, delivery slots, or any portions other than the lift handles. If you do so, you may drop the printer, resulting in personal injury.**

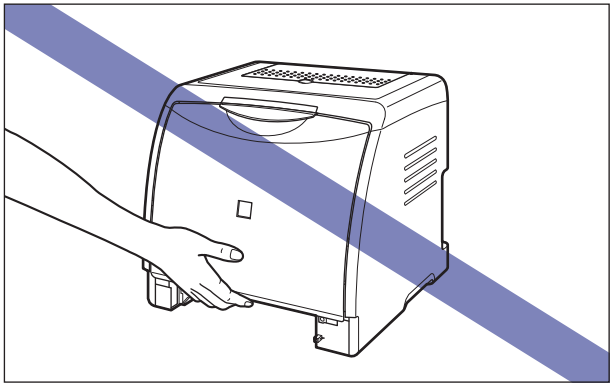

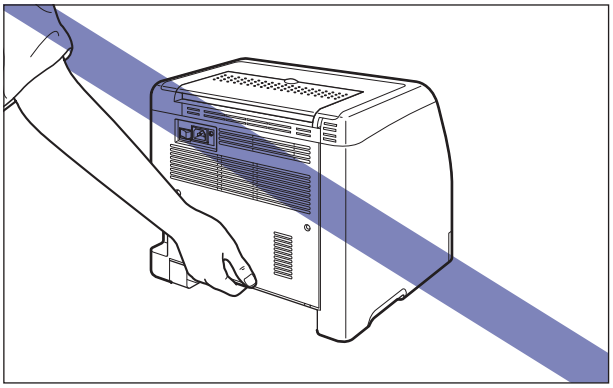

- **The front portion of the printer (A) is relatively heavy. Be careful not to get off-balanced when lifting the printer. If you do so, you may drop the printer, resulting in personal injury.**

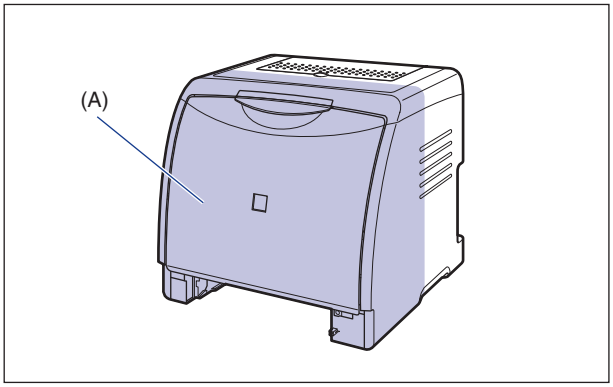

- **Be sure to hold the printer from the front side when carrying it. If you hold the printer from the rear side, you may get off-balanced and drop the printer, resulting in personal injury.**

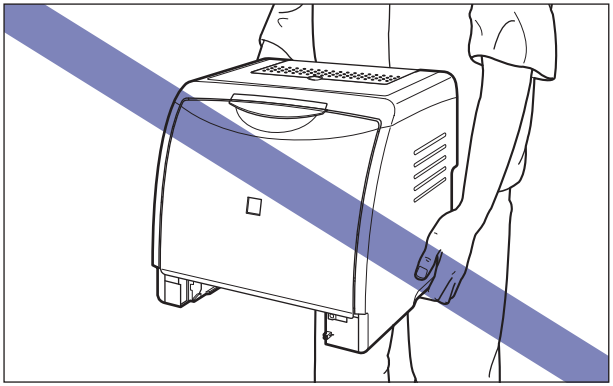

IMPORTANT

Make sure that the front cover and output tray are closed before carrying the printer.

Installing the Paper Feeder

The paper feeder is to be installed at the bottom of the printer unit.

CAUTION

- **Put the printer or paper feeder down slowly and carefully. Be careful not to hurt your hands.**
- **Do not carry the printer with the paper cassette attached. If you do so, the paper cassette may drop resulting in personal injury.**

1 Pull out the paper cassette from the paper feeder.

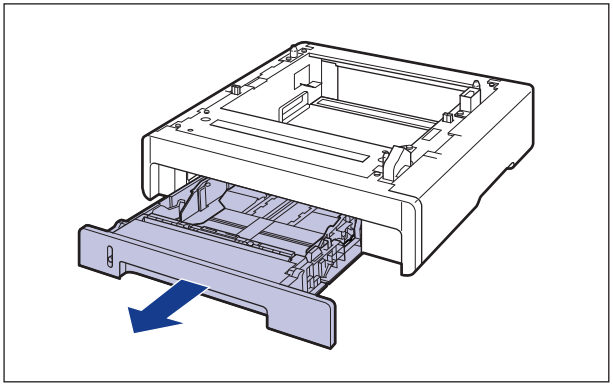

2 Place the paper feeder at the installation site.

When carrying the paper feeder, hold the lift handles on both sides with both hands as shown in the figure.

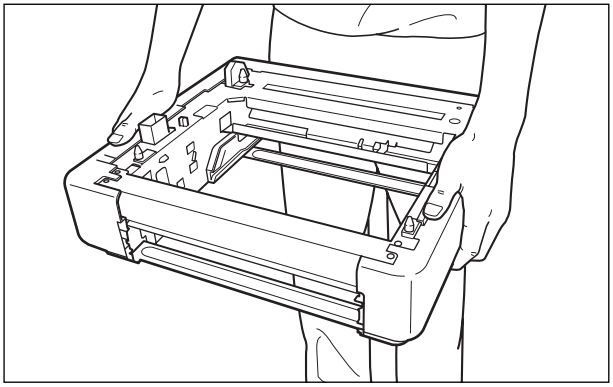

IMPORTANT

- Do not touch the connector (A) in the paper feeder. This may result in damage to the printer or misfeeds.

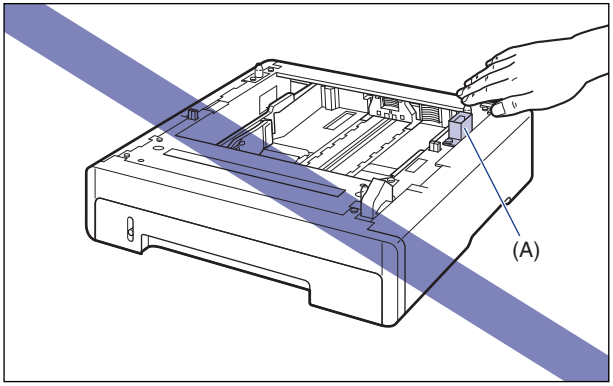

- Do not install the paper feeder on a platform that may warp from the weight of the printer and optional accessories, or where the printer is liable to sink (such as a carpet or mat).
- Secure sufficient space around the paper feeder so that you can install the printer and connect cords such as the power cord and interface cables.

3 When installing the printer unit on the paper feeder, gently set it down so that each surface of the printer unit is flush with the front or side surfaces of the paper feeder.

Also, match the positioning pins (A) and connector (B) when setting the printer unit.

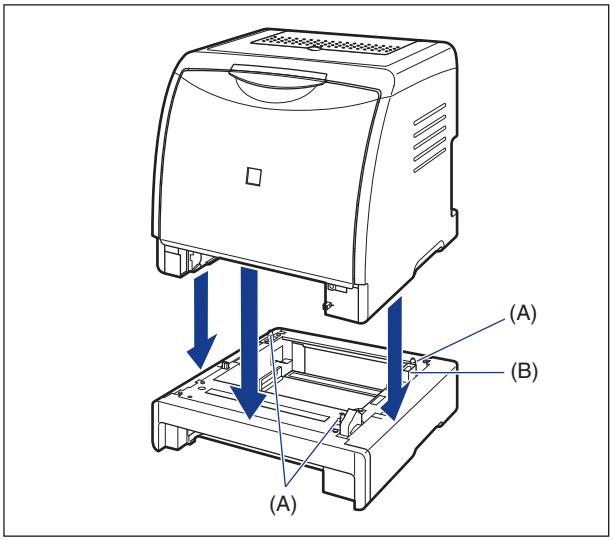

IMPORTANT

If the printer unit cannot be placed on the paper feeder properly, lift the printer unit once, hold it horizontally, and place it again. If you try to set the printer unit forcefully without lifting it, the connector and positioning pins may be broken.

4 Attach the cassette protective cover to the printer unit and paper feeder.

Install the left side of the cassette protective cover ① on the printer, then while pressing the right side of the cover ②, insert the cover into the back of the printer ③ as shown in the figure.

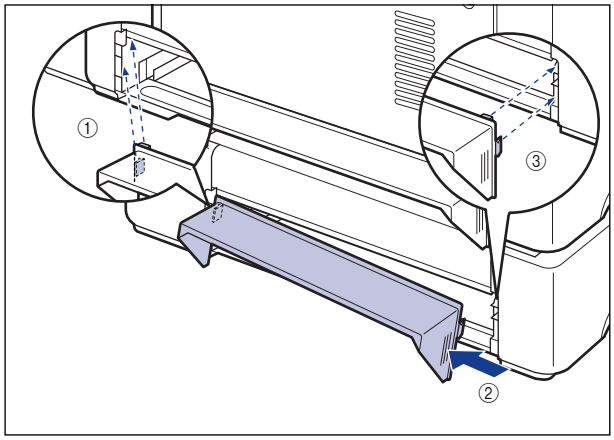

IMPORTANT

Do not put hands, press hard, or place objects on the cassette protective cover. It may damage to the cassette protective cover.

5 Set the paper cassette in the printer unit and paper feeder.

6 Open the output tray.

7 Connect the interface cables except for the USB cable, and connect the power cord.

8 Plug the power plug into the AC power outlet.

9 Connect the USB cable.

NOTE

After installing the paper feeder, you have to specify the settings for the optional accessories in the [Configuration]/[Device Settings] sheet in the printer driver. You can obtain the status of the optional accessories automatically by clicking [Get Device Status] in the [Configuration]/[Device Settings] sheet.

Removing the Paper Feeder

Remove the paper feeder using the following procedure.

WARNING

Be sure to turn the printer and computer OFF, unplug the power plug, and then disconnect all the interface cables and power cord from the printer before removing the paper feeder. Otherwise, the power cord or interface cables may be damaged, resulting in a fire or electrical shock.

CAUTION

- **Do not carry the printer with the paper cassette attached. If you do so, the paper cassette may drop resulting in personal injury.**
- **Do not carry the printer with the paper feeder installed. If you do so, the paper feeder may drop resulting in personal injury.**

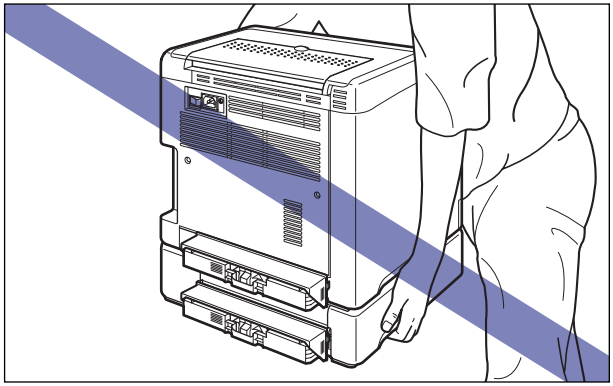

IMPORTANT

When moving or servicing the printer, remove the paper feeder and paper cassette.

1 **Turn the printer and computer OFF, remove the USB cable, and then disconnect the power plug from the AC power outlet.**

2 **Remove all the interface cables and the power cord from the printer.**

3 Close the output tray.

4 Pull out the paper cassette from the printer unit and all the paper feeder.

5 Remove the cassette protective cover from the printer unit and paper feeder.

6 Lift the printer unit and remove it from the paper feeder.

7 Move the paper feeder.

8 Move back the printer unit to the installation site.

9 Install the cassette protective cover.

10 Set the paper cassette in the printer.

11 Open the output tray.

12 Connect the interface cables except for the USB cable, and connect the power cord.

13 Plug the power plug into the AC power outlet.

14 Connect the USB cable.

Network Board

Install the network board in the expansion slot located on the rear of the printer.

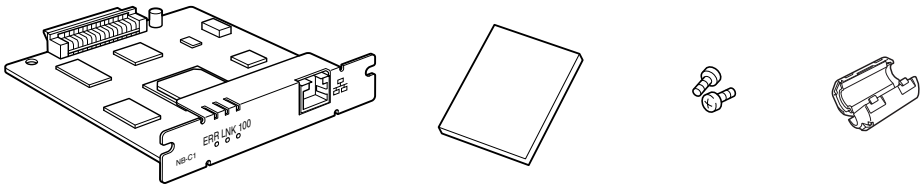

Network board (NB-C1) | Guide booklet | Screws (2 pieces) | Ferrite core

By installing the optional network board, you can use LBP5000 directly connected to a network.

Connecting the network board on the printer directly to the computer

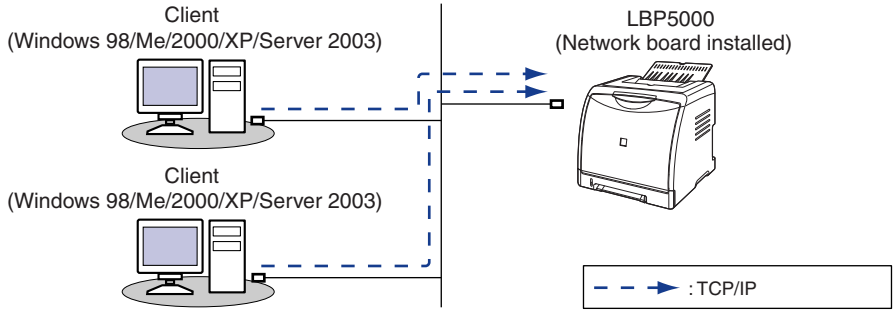

Connecting the printer to the computer via a print server

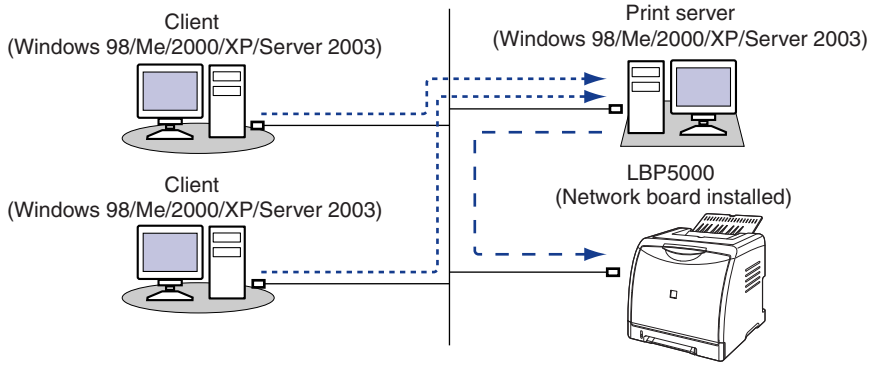

* If your print server is Windows 98/Me, you cannot download and install the driver on Windows 2000/XP/Server 2003

CAUTION

- **Be sure to turn the printer OFF, unplug the power plug, and then disconnect all the interface cables and power cord from the printer before installing the network board. If a USB cable is connected, turn the computer off, and then remove the USB cable. If you attempt to remove the network board when the printer is ON or any cable is connected to the printer, this may result in an electrical shock.**
- **Be careful when handling the network board. Touching the edges or a sharp portion of the network board may result in personal injury.**

IMPORTANT

The network board contains components that are sensitive to static electricity. Observe the following precautions when handling the network board to prevent damage from static electricity.

- Touch a metal object to dissipate static electricity before handling the network board.
- When handling the network board, do not touch anything that generates static electricity such as the computer display.
- Do not touch the network board parts, printed wire, or connectors with your hands.
- To prevent the network board from being affected by static electricity, keep it in the protective bag until it is ready to be installed. The protective bag is required after the network board is removed. Keep the protective bag and do not discard of it.

NOTE

This network board does not come with a LAN cable. A Category 5 twisted pair cable is required for installing the network board and connecting the printer to a network. Have cables or a hub ready as needed.

Parts and Their Functions

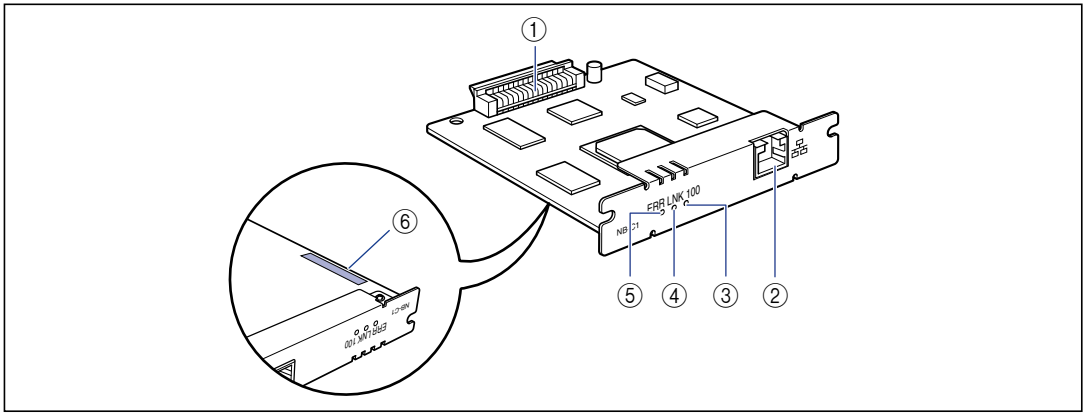

① Printer Connector

Connects to the printer. Do not touch the connector directly with your hands.

② LAN Connector

Connects to a 10BASE-T/100BASE-TX LAN cable.

③ **100 Indicator (Green)**

Comes on when the network board is connected to the network by 100BASE-TX.
Does not come on when connected by 10BASE-T.

④ **LNK Indicator (Green)**

Comes on when the network board is connected to the network properly.

⑤ **ERR Indicator (Orange)**

Comes on or blinks when the network board is not working properly.

⑥ **MAC Address**

It is required when setting the IP address using the ARP/PING command. It may be also required when installing the printer driver.

Installing the Network Board

Install the network board in the expansion slot of the printer using the following procedure. A Phillips screwdriver is required for installing the network board. Have a screwdriver ready in advance that matches the size of the screws.

1 **Turn the printer and computer OFF ①, remove the USB cable ②, and then disconnect the power plug from the AC power outlet ③.**

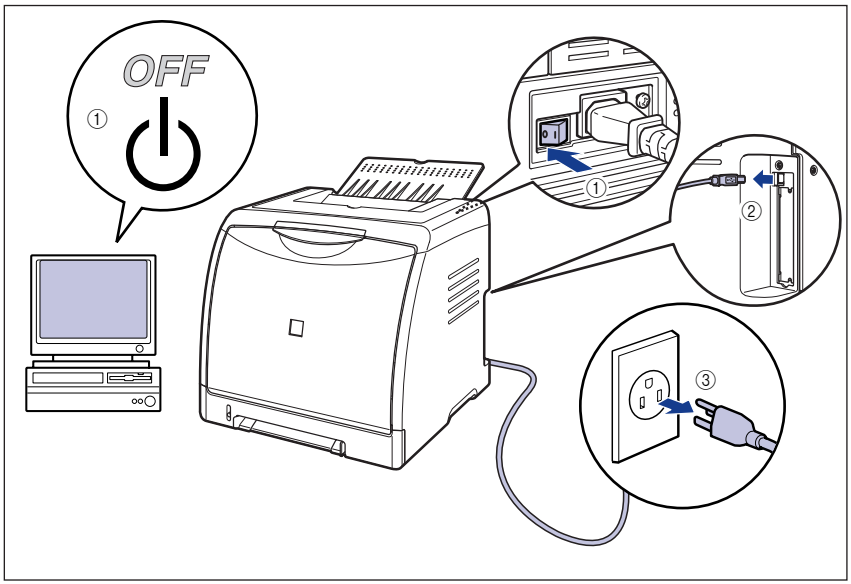

2 **Remove the power cord.**

If there is not enough space to install the network board, move the printer to a place where you can work easier.

3 Remove the screws and remove the protective plate for the expansion slot.

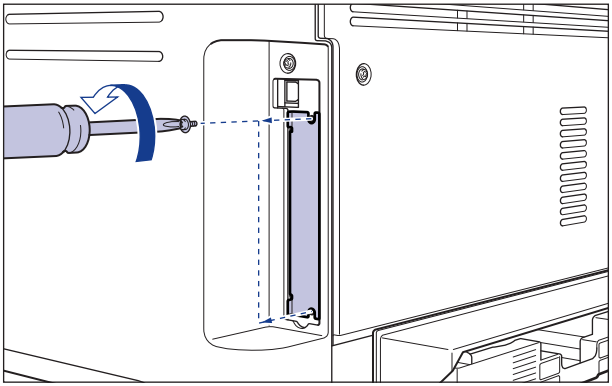

IMPORTANT

The removed protective plate and screws are required when the network board is removed. Keep them where they will not get lost.

4 Insert the network board into the expansion slot.

Hold the metal panel portions of the network board and insert the board while aligning it with the guide rails inside the expansion slot.

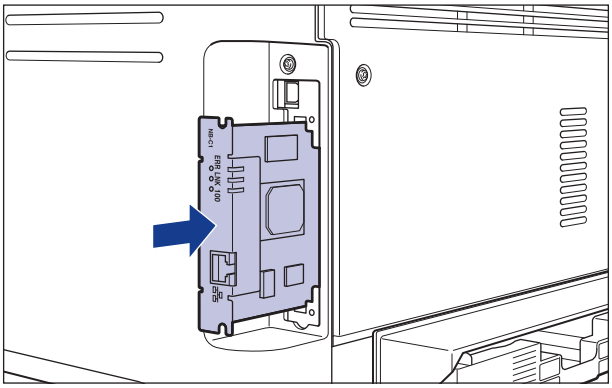

IMPORTANT

- Do not touch the network board parts, printed wire, or connectors with your hands.
- Insert the printer connector of the network board securely into the connector inside the expansion slot.

5 Secure the top and bottom portions of the network board with the two screws supplied with the network board.

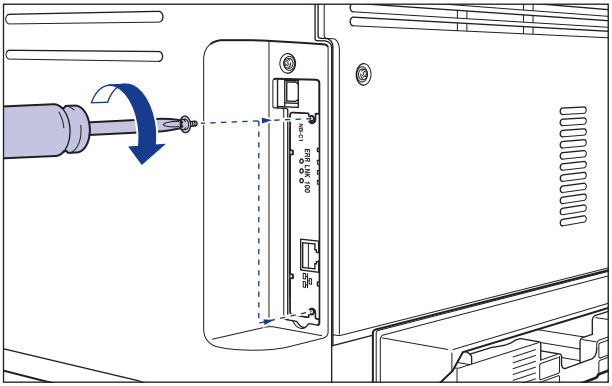

6 Attach the ferrite core to the LAN cable as shown in the figure.

Attach the ferrite core at 5 cm or less from the end of the connector which is connected to the printer.

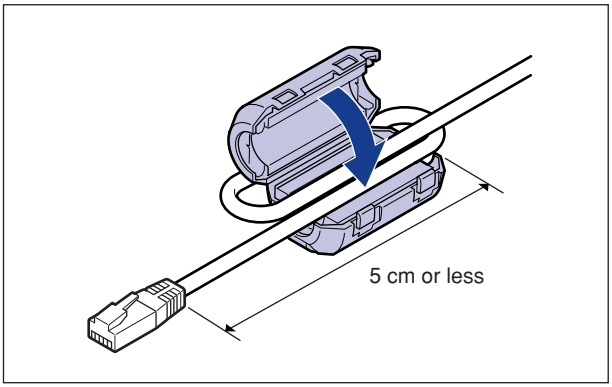

NOTE

This network board does not come with a LAN cable. A Category 5 twisted pair cable is required for installing the network board and connecting the printer to a network. Have cables or a hub ready as needed.

7 Connect the LAN cable.

Connect a LAN cable that is compatible with the LAN connector of the network board according to the network.

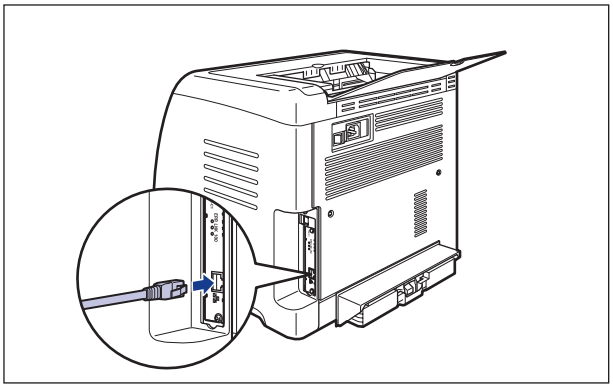

8 Connect the power cord.

9 Plug the power plug into the AC power outlet.

10 Connect the USB cable as needed.

11 Press "|" of the power switch to turn the printer ON.

IMPORTANT

If the printer does not operate properly, or an error message appears in the Printer Status Window, see "Troubleshooting," on p. 7-1.

12 Make sure that the LNK indicator (green) on the network board is on.

If the network board is connected by 10BASE-T, the board is working properly when the LNK indicator is on.
If the network board is connected by 100BASE-TX, the board is working properly when the LNK indicator and 100 indicator are on.
((A): ERR Indicator (B): LNK Indicator (C): 100 Indicator)

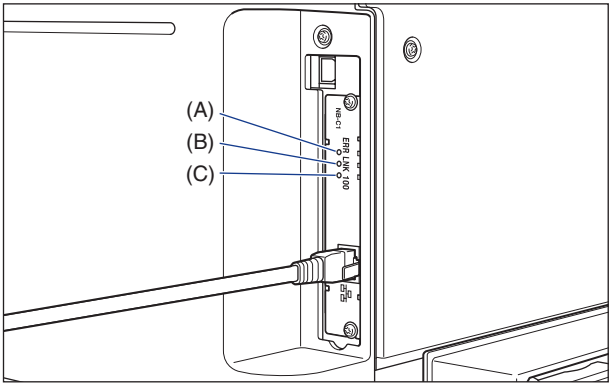

If the network board is not working properly, turn the printer OFF, and then check the LAN cable connection, hub performance, and network board installation.

Setting the Network Board

The default value of the network board is set at "Auto detect". Usually, you do not need to change the setting, since the transmission speed and transfer mode of 10BASE-T/100BASE-TX are detected automatically. If the printer cannot communicate with other devices on the network, set the DIP switches on the network board. Before setting the DIP switches, turn the printer OFF, then remove the network board. A Phillips screwdriver is required for removing the network board. Have a screwdriver ready in advance that matches the size of the screws. Set the DIP switches according to the transmission speed of the connected network as follows.

IMPORTANT

When setting the DIP switches, be careful not to damage the main board with the tip of a ball-point pen etc. Do not use a sharp object such as a mechanical pencil.

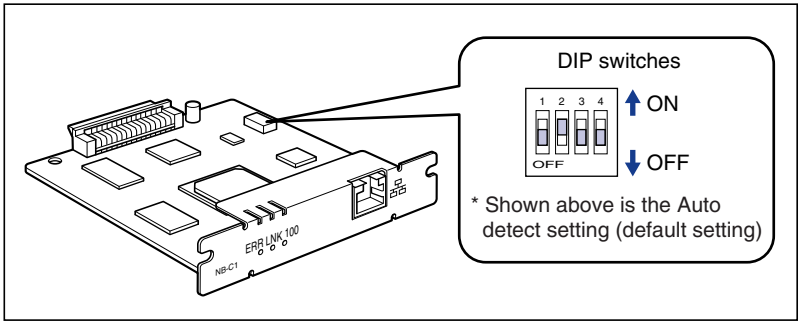

■ Setting the Network Transmission Speed/Transfer Mode and the DIP Switches

Communication speed and Transmission mode of LAN	DIP switch setting
Auto detect (default setting)	1 2 3 4 OFF ON OFF
10BASE-T/Half-duplex	1 2 3 4 OFF ON OFF
10BASE-T/Full-duplex	1 2 3 4 OFF ON OFF
100BASE-TX/Half-duplex	1 2 3 4 OFF ON OFF
100BASE-TX/Full-duplex	1 2 3 4 OFF ON OFF

1 Turn the printer and computer OFF, remove the USB cable, and then disconnect the power plug from the AC power outlet.

2 Remove all the interface cables and the power cord from the printer.

3 Remove the two screws and remove the network board.

IMPORTANT

Do not touch the network board parts, printed wire, or connectors with your hands.

4 Set the DIP switches.

Set the DIP switches with the tip of a ball-point pen etc. For details on methods for setting the DIP switches, see the table of p. 6-27.

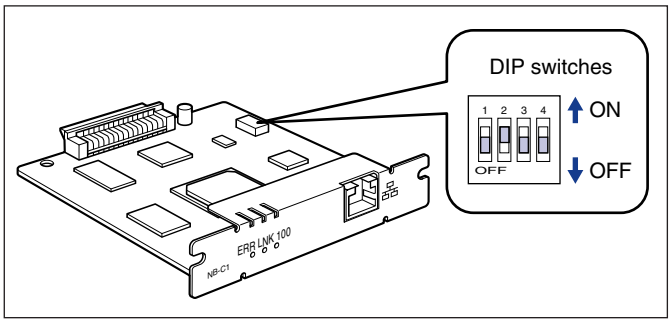

5 Insert the network board into the expansion slot.

Hold the metal panel portions of the network board and insert the board while aligning it with the guide rails inside the expansion slot.

IMPORTANT

- Do not touch the network board parts, printed wire, or connectors with your hands.
- Insert the printer connector of the network board securely into the connector inside the expansion slot.

6 Secure the top and bottom portions of the network board with the two screws supplied with the network board.

7 **Connect the LAN cable.**

8 **Connect the power cord.**

9 **Plug the power plug into the AC power outlet.**

10 **Connect the USB cable.**

Problems on Installing the Network Board

On checking the operation of the network board, if you find that all the indicators on the network board are off, or the ERR indicator is on or keeps blinking for a long time and does not go off, take the following measures.

NOTE

For details on problems on installing the CAPT software, see "Chapter 4 Troubleshooting" in Network Guide.

All the indicators on the network board are off.

Cause 1	The LAN cable is not connected properly or broken.
Remedy 1	Remove the LAN cable once, then connect it again.
Remedy 2	Replace the LAN cable with another one, then connect it.
Cause 2	The cable is connected to the UP-LINK (cascade) port on the hub.
Remedy 1	Connect the LAN cable to a port with a "X" mark.
Remedy 2	If the hub has a UP-LINK (cascade) switch, switch to "X".
Cause 3	A cross LAN cable is being used.
Remedy 1	Replace the cable with a straight LAN cable.
Remedy 2	Connect the cross LAN cable to the UP-LINK (cascade) port on the hub. If the hub has a UP-LINK (cascade) switch, switch to "=".

NOTE

A cross LAN cable is a cable used to connect a printer and computer directly.

Cause 4	Cannot communicate with the hub.
Remedy 1	Make sure that the power of the hub is on.

Remedy 2	Set the DIP switches according to the transmission speed of the connected hub. (See "Setting the Network Board," on p. 6-26)
Remedy 3	Replace the hub.
Cause 5	The network board is not installed properly.
Remedy	Remove the network board once, then install it again.
Cause 6	The hardware of the network board is in an abnormal condition.
Remedy	Report the problems to your local authorized Canon dealer.

The ERR indicator on the network board is on.

Cause	The network cable is disconnected or broken, or the network board is not installed properly.
Remedy 1	Make sure the network cable is connected properly.
Remedy 2	Replace the network cable with a proper one and check if there is no disconnection or damage.
Remedy 3	If the ERR indicator still comes on even after applying the Remedy 1 and 2, contact your local authorized Canon dealer for servicing.

The ERR indicator on the network board blinks at an interval of four times.

Cause	The DIP switch 1 on the network board is ON.
Remedy	Set the DIP switch 1 to OFF once.

The ERR indicator on the network board keeps blinking.

Cause	The hardware of the network board is in an abnormal condition.
Remedy	Contact your local authorized Canon dealer for servicing.

Resetting the Network Board

If you want to reset the network board to the default values, use the Remote UI or FTP Client. For details on the Remote UI, see "Chapter 3 Various Functions of Remote UI" in Remote UI Guide, and on FTP Client, see "Chapter 5 Appendix" in Network Guide.

Even if none of the above procedures work, you can reset the settings for the network board by manipulating the DIP switches using the following procedure. A Phillips screwdriver is required to reset the settings for the network board. Have a screwdriver ready in advance that matches the size of the screws.

1 **Turn the printer and computer OFF, remove the USB cable, and then disconnect the power plug from the AC power outlet.**

2 **Remove all the interface cables and the power cord from the printer.**

3 **Remove the two screws and remove the network board.**

IMPORTANT

Do not touch the network board parts, printed wire, or connectors with your hands.

4 **Switch the DIP switch 1 to ON.**

Set the DIP switches with the tip of a ball-point pen etc.

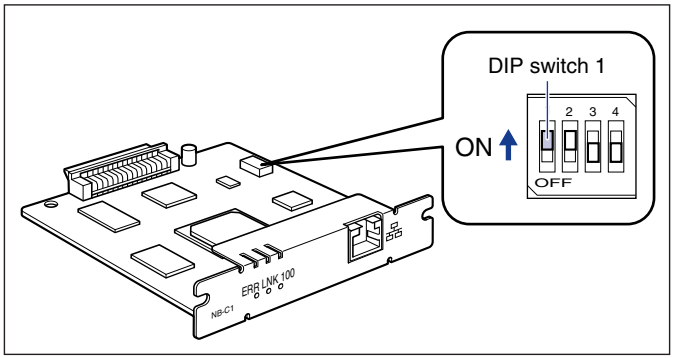

IMPORTANT

When setting the DIP switches, be careful not to damage the main board with the tip of a ball-point pen etc. Do not use a sharp object such as a mechanical pencil.

5 Insert the network board into the expansion slot.

Hold the metal panel portions of the network board and insert the board while aligning it with the guide rails inside the expansion slot.

IMPORTANT

- Do not touch the network board parts, printed wire, or connectors with your hands.
- Insert the printer connector of the network board securely into the connector inside the expansion slot.

6 Secure the top and bottom portions of the network board with the two screws supplied with the network board.

7 Connect the power cord.

8 Plug the power plug into the AC power outlet.

9 Press "|" of the power switch to turn the printer ON, wait until the ◡ (Ready) indicator comes on, and then press "○" of the power switch to turn the printer OFF.

10 Disconnect the power plug from the AC power outlet.

11 Remove the power cord.

12 Remove the network board, then reset the DIP switch 1 to OFF.

Set the DIP switches with the tip of a ball-point pen etc.

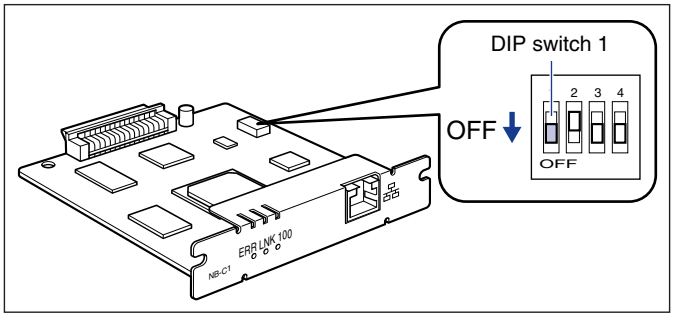

IMPORTANT

When setting the DIP switches, be careful not to damage the main board with the tip of a ball-point pen etc. Do not use a sharp object such as a mechanical pencil.

13 Install the network board.

14 Connect the interface cables except for the USB cable, and connect the power cord.

15 Plug the power plug into the AC power outlet.

16 Connect the USB cable as needed.

Removing the Network Board

Remove the network board using the following procedure. Have ready the protective plate and screws for the expansion slot removed when the network board was installed.

CAUTION

- **Be sure to turn the printer and computer OFF and disconnect all the interface cables and power cord from the printer before removing the network board. If a USB cable is connected, turn the computer off, and then remove the USB cable. If you attempt to remove the network board when the printer is ON or any cable is connected to the printer, this may result in an electrical shock.**
- **Be careful when handling the network board. Touching the edges or a sharp portion of the network board may result in personal injury.**

1 **Turn the printer and computer OFF, remove the USB cable, and then disconnect the power plug from the AC power outlet.**

2 **Remove all the interface cables and the power cord from the printer.**

3 **Remove the two screws and remove the network board.**

Store the network board in the protective bag that it came in.

IMPORTANT

- Do not touch the network board parts, printed wire, or connectors with your hands.
- The removed two screws are required when the network board is installed. Keep them where they will not get lost.

4 **Attach the protective plate to the expansion slot and secure it with the screws.**

5 **Connect the interface cables except for the USB cable, and connect the power cord.**

6 **Plug the power plug into the AC power outlet.**

7 **Connect the USB cable.**

Troubleshooting

7

CHAPTER

This chapter describes the remedies for problems such as a paper jam or poor print quality.

Troubleshooting Map 7-2

Alarm Indicator 7-3

Paper Jams 7-4

Procedure for Clearing Paper Jams 7-7

Service Call Display 7-14

Print Quality Problems 7-17

Paper Problems 7-26

When Nothing is Printed 7-28

Installation Problems 7-29

When Uninstallation Fails 7-30

Uninstalling the USB Class Driver 7-32

Problems on Local Installation 7-35

Installation Problems When the Printer is Shared on a Network 7-36

Problems on Installing the Network Board 7-37

Miscellaneous Problems 7-39

Confirming the Printer Features 7-41

Troubleshooting Map

If any problem occurs while you are using the printer, follow the flow chart shown below to check the problem.

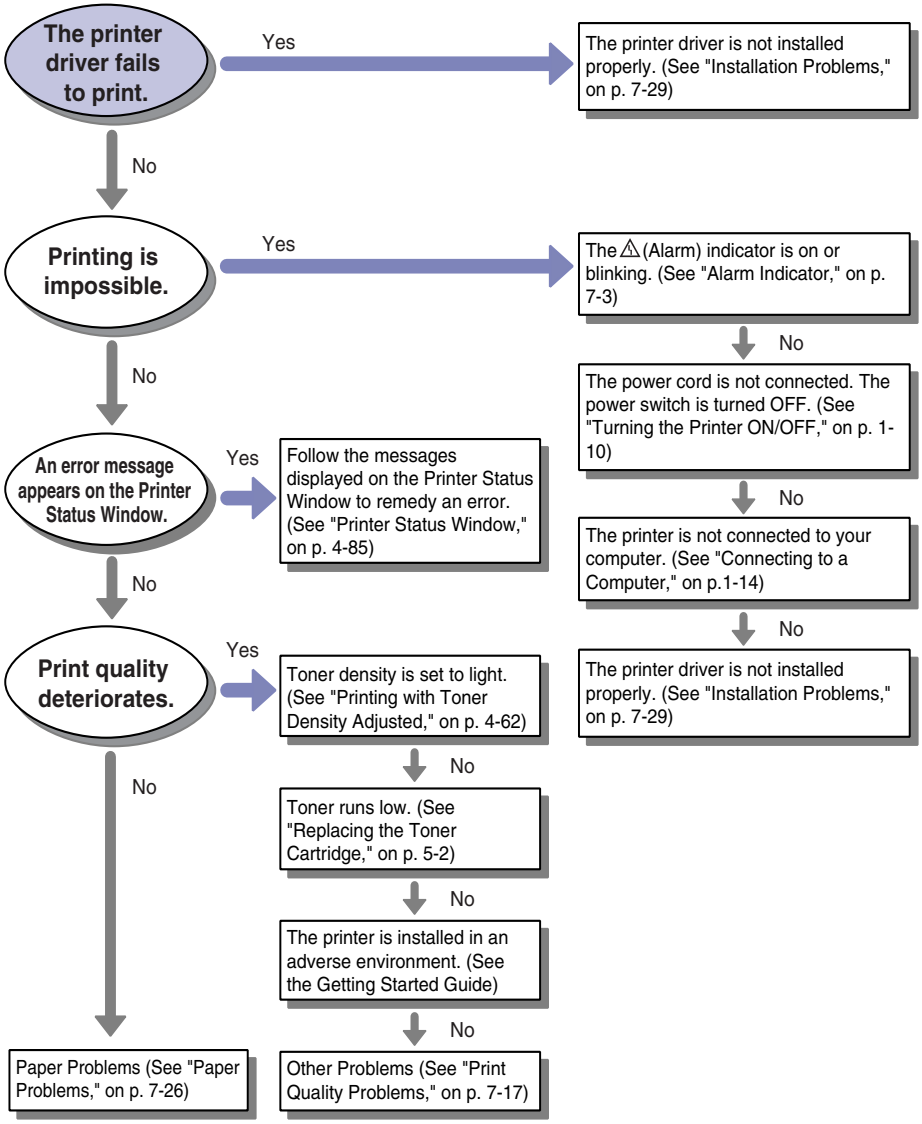

Alarm Indicator

When a problem has occurred in the printer, the ⚠ (Alarm) indicator (orange) comes on or blinks.

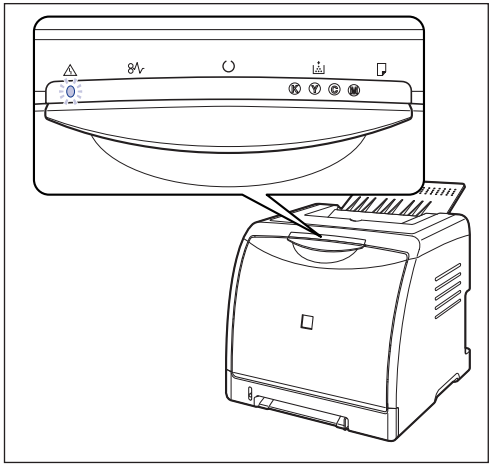

When the ⚠ (Alarm) indicator is on, a service error is occurring. In this case, see "Service Call Display," on p. 7-14.

If the ⚠ (Alarm) indicator is blinking, follow the directions displayed in the Printer Status Window.

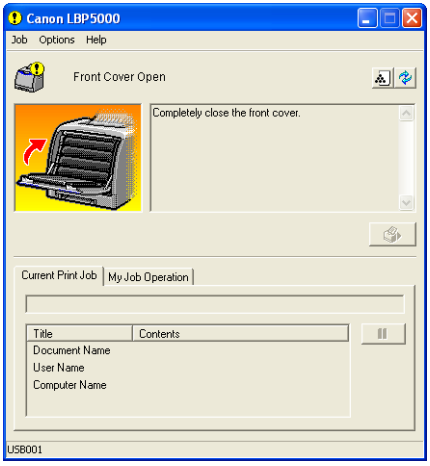

Paper Jams

When a paper jam occurs during printing, the Paper Jam indicator (orange) blinks, and the following messages appear in the Printer Status Window.

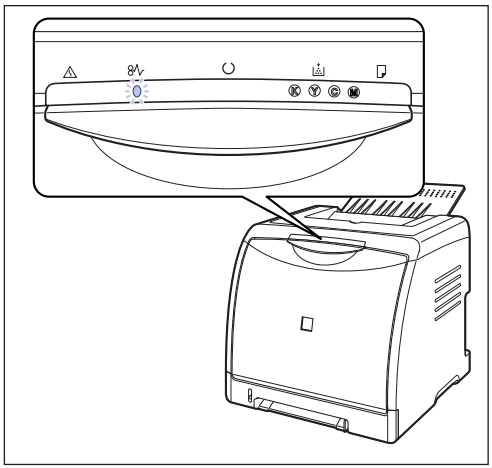

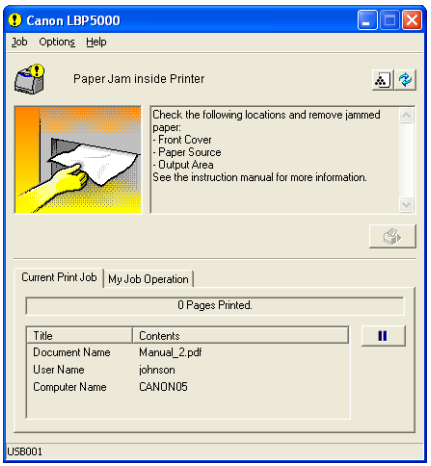

WARNING

There are some areas inside the printer which are subject to high-voltages. When removing jammed paper or when inspecting the inside of the printer, do not allow necklaces, bracelets, or other metal objects to touch the inside of the printer, as this may result in burns or electrical shock.

CAUTION

- **The fixing unit and its surroundings inside the printer are hot during use. Make sure the fixing unit is completely cool before removing the jammed paper. Touching the fixing unit when it is still hot may result in burns.**

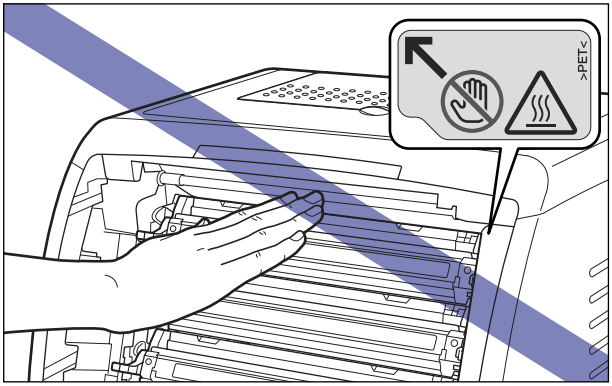

- **When removing jammed paper, take care not to allow the toner to come into contact with your hands or clothing, as this will dirty your hands or clothing. If they become dirty, wash them immediately with cold water. Washing with warm water will set the toner and make it impossible to remove the toner stains.**
- **When removing paper jammed inside the printer, remove the jammed paper gently to prevent the toner on the paper from scattering and getting into your eyes or mouth. If the toner gets into your eyes or mouth, wash them immediately with cold water and immediately consult a physician.**
- **When removing jammed paper, take care not to cut your hands with the edges of the paper.**

IMPORTANT

- Remove jammed paper while the power of the printer is ON. If the power is turned OFF, the data being printed will be deleted.
- Applying excess force may result in tearing paper or damaging the parts in the printer. When removing jammed paper, pull out the paper in the most appropriate direction, judging from the position of the paper.
- If paper is torn, be sure to find and remove any remaining pieces of paper.
- The error message may remain if jammed paper is removed without opening the front cover. In this case, open and close the front cover once.

- Do not place any object on or touch the transfer belt (A) of the ETB unit. The transfer belt of the ETB unit is supplied with a function that cleans itself, therefore, do not clean the belt even when the toner is on it. If the ETB unit is broken or transfer belt is damaged, this may result in misfeeds or deterioration in print quality.

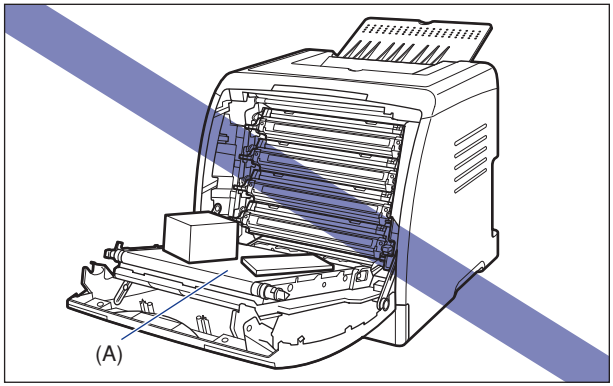

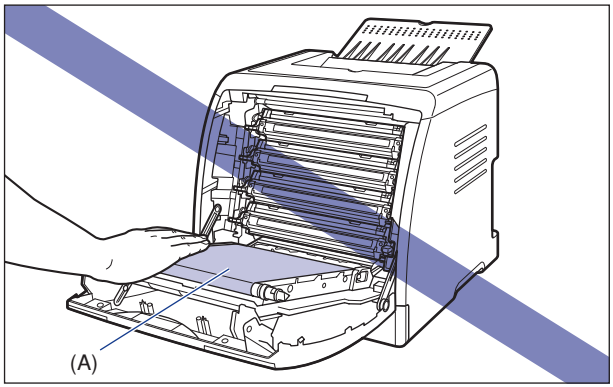

Procedure for Clearing Paper Jams

Follow the instructions below to remove the jammed paper:

1 Open the front cover.

Holding the opening of the front cover, open it gently.

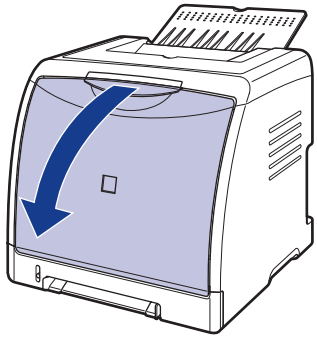

2 Remove any jammed paper by pulling it in the direction of the arrow.

Because unfixed toner is on the paper, be careful not to stain your hands or clothes with it when removing the paper. Remove the paper, being careful not to touch the transfer belt of the ETB unit or toner cartridge.

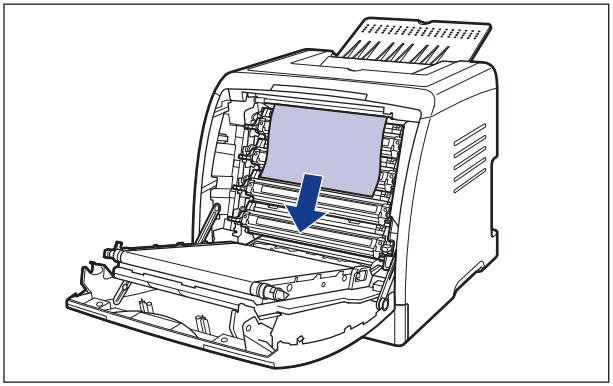

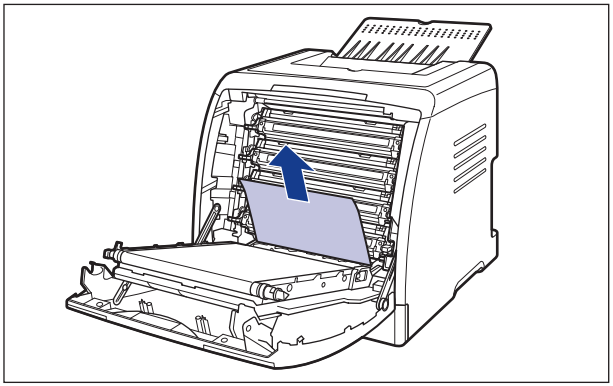

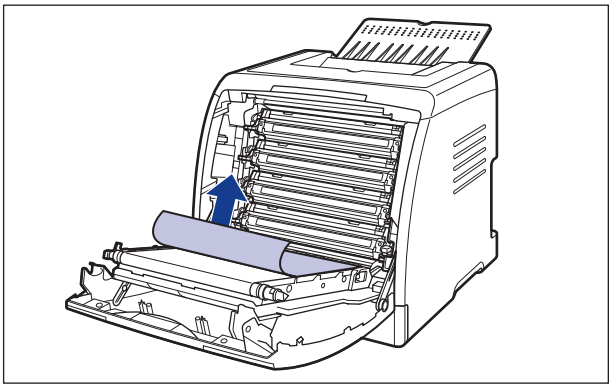

3 Check the output tray and remove any jammed paper.

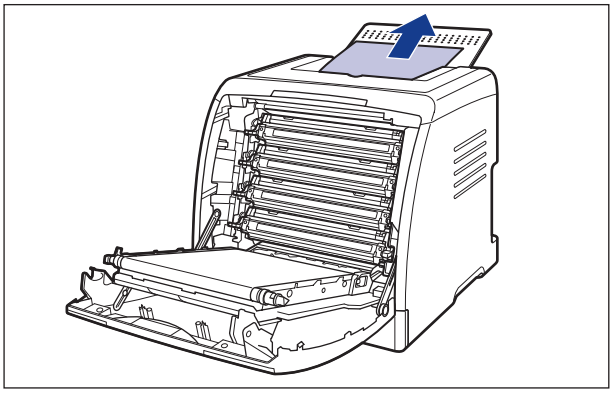

4 Close the front cover.

Holding the opening of the front cover, close it gently.

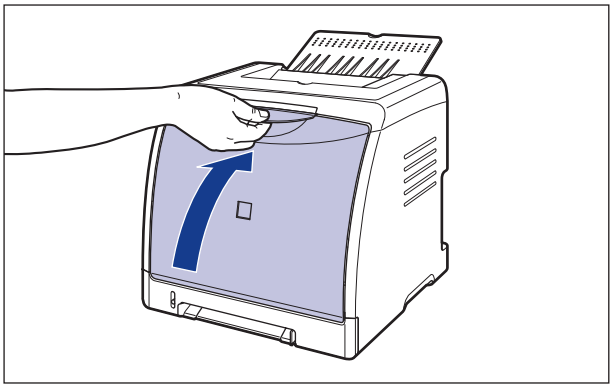

CAUTION

When closing the front cover, be careful not to catch your fingers.

5 If you are using the manual feed slot, remove any paper jammed in the manual feed slot.

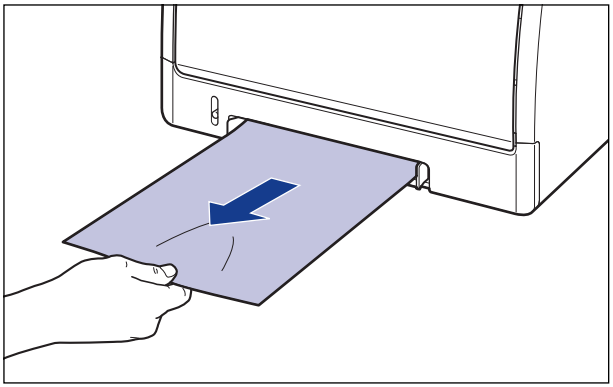

6 Pull out the paper cassette.

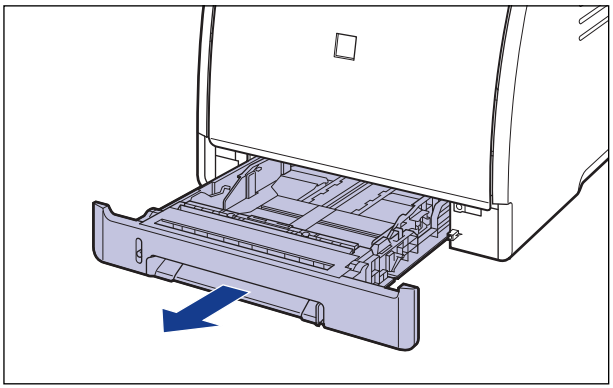

If the paper feeder is installed, pull out the paper cassette of the paper feeder also.

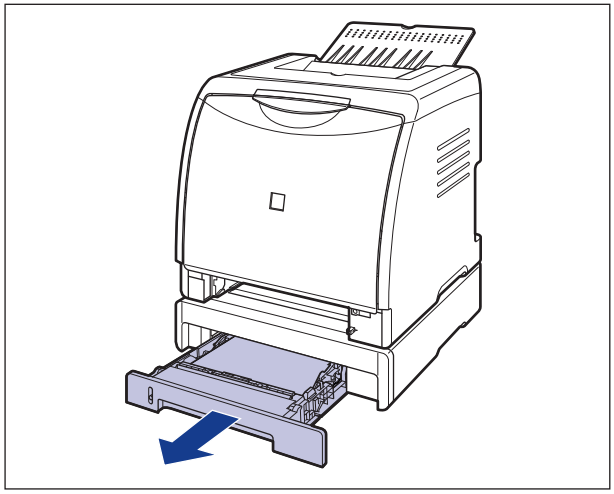

7 Remove any jammed paper while pushing it downward to some extent.

In case of the printer unit

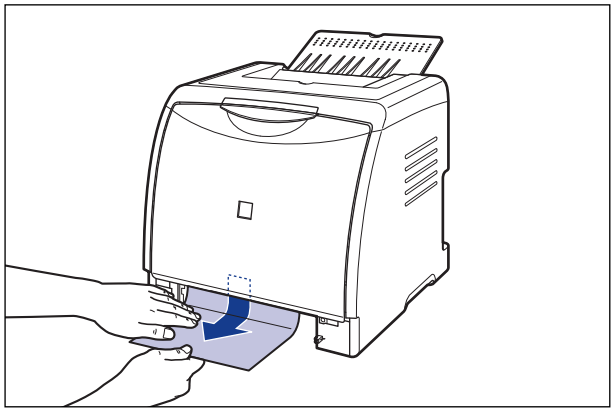

In case of the paper feeder

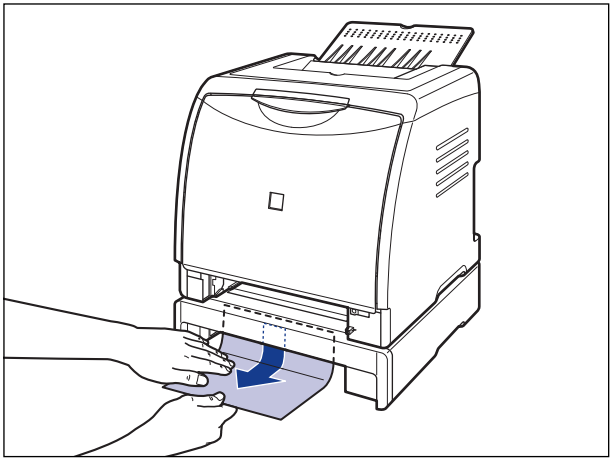

IMPORTANT

Do not touch the feed rollers (A) in the printer unit and paper feeder. This may result in damage to the printer or printer error.

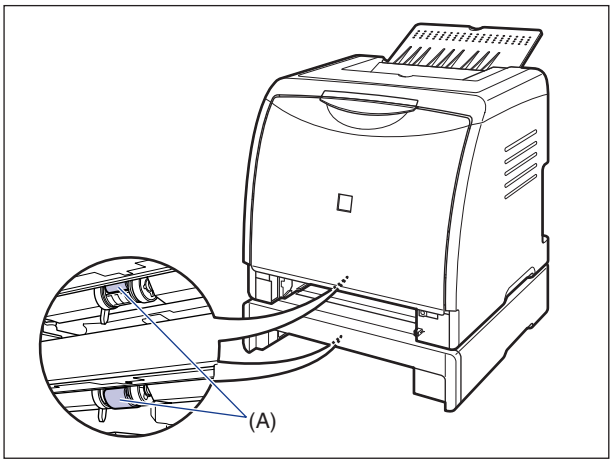

8 Set the paper cassette in the printer.

Push the paper cassette into the printer firmly until the front side of the cassette is flush with the front surface of the printer.

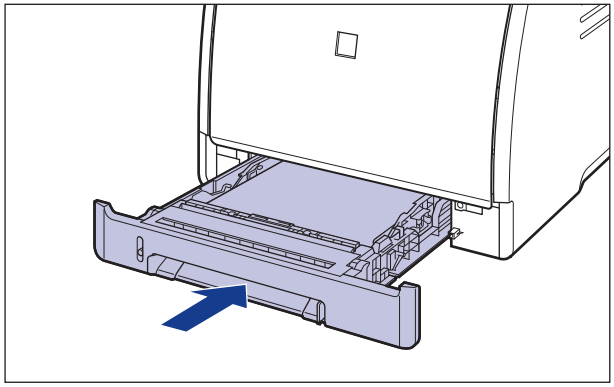

If the paper feeder is installed, set the paper cassette of the paper feeder also.

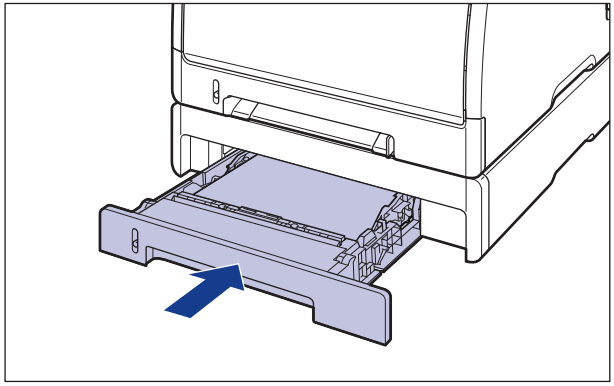

Service Call Display

When a problem has occurred and the printer does not work properly, the ⚠ (Alarm) indicator (orange) comes on and the following service call appears in the Printer Status Window.

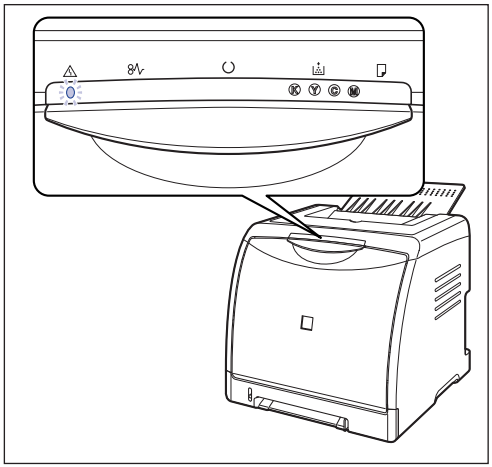

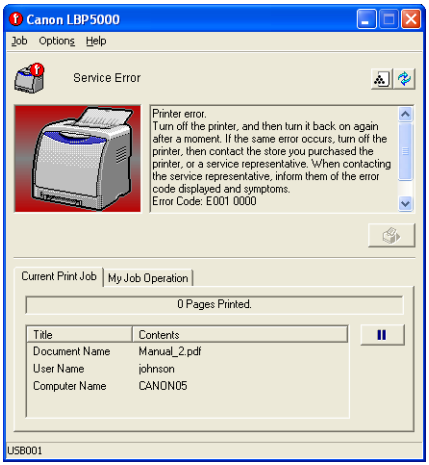

If the service call appears, cycle the power of the printer using the following procedure. This may clear the message.

1 **Turn the power OFF, wait for 10 seconds or longer, and then turn it ON again.**

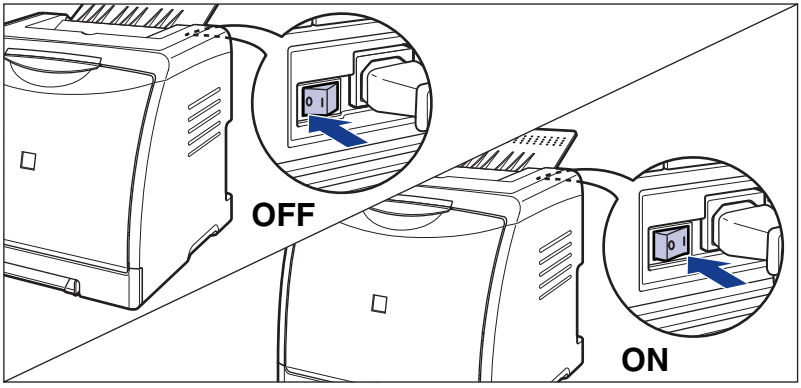

If the message does not reappear, the printer can be used as normal. If the error message still appears, proceed to the next step.

2 Note down the error code displayed in the Printer Status Window.

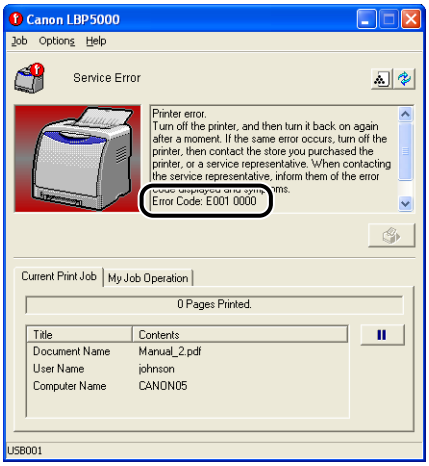

3 Turn the printer and computer OFF ①, remove the USB cable ②, and then disconnect the power plug from the AC power outlet ③.

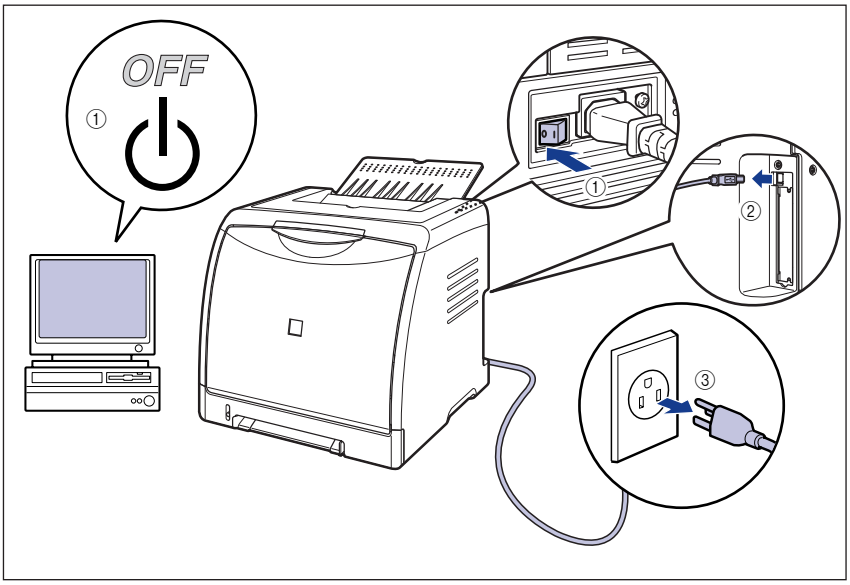

4 Contact your local authorized Canon dealer.

When contacting your Canon dealer, please report the problems and the error code that you have noted.

Print Quality Problems

If any problem occurs while you are using the printer, take the following measures depending on the symptoms.

IMPORTANT

- If a message appears in the Printer Status Window, follow the directions in the message.
- When a paper jam occurs, see "Paper Jams," on p. 7-4.
- If a symptom that is not indicated in this section occurs, if none of the indicated remedies do not solve the problem, or if you cannot determine the problem, contact your local authorized Canon dealer.

Paper comes out in certain color and nothing is printed on it.

Cause 1 The drum in any of the toner cartridges has deteriorated.

Remedy Replace the toner cartridge with a new one. (See "Replacing Toner Cartridges," on p. 5-2)

Cause 2 A problem has occurred inside the printer.

Remedy 1 If <Service Error> is displayed in the Printer Status Window, turn the power OFF, wait for 10 seconds or longer, and then turn the power ON again. This may clear the message.

Remedy 2 If the message does not disappear even after applying the Remedy 1, contact your local authorized Canon dealer for servicing.

White streaks appear.

Cause The drum in any of the toner cartridges has deteriorated.

Remedy Replace the toner cartridge with a new one. (See "Replacing Toner Cartridges," on p. 5-2)

Printed pages have white specks.

Cause 1 Appropriate paper is not being used.

Remedy Replace the paper with one that can be used and print again. (See "Paper Requirements," on p. 2-2)

Cause 2	Paper is damp since the paper has been stored in unsuitable condition.
Remedy	Replace the paper with new one and print again. (See "Paper Requirements," on p. 2-2)
Cause 3	The drum in any of the toner cartridges has deteriorated.
Remedy	Replace the toner cartridge with a new one. (See "Replacing Toner Cartridges," on p. 5-2)

Residual images appear on non-printed areas.

Cause 1	Printing paper is inappropriate.
Remedy	Change the paper and print again. (See "Paper Requirements," on p. 2-2)
Cause 2	Paper of a wider width was printed just after paper with a narrower width (A5 size etc.) was printed continuously.
Remedy 1	To lower the temperature of the fixing unit, wait for a while before printing again.
Remedy 2	In the Printer Status Window, select [Device Settings] from the [Options] menu, point to [Small-size Paper Special Setting], and then set [Small-size Paper Special Process] to [Image Quality Priority] (However, this may lengthen the waiting time before the operation begins).
Cause 3	The drum in any of the toner cartridges has deteriorated.
Remedy	Replace the toner cartridge with a new one. (See "Replacing Toner Cartridges," on p. 5-2)

The overall print result is faint.

Cause 1	The setting for [Toner Density] is not appropriate.
Remedy	Drag the [Toner Density] slider in the printer driver toward [Dark]. In order to specify the setting for [Toner Density], display the [Custom Settings] dialog box by clicking [Settings] in the [Quality] sheet.
Cause 2	[Use Draft Mode] is enabled.
Remedy	Clear the [Use Draft Mode] check box in the printer driver. In order to specify the setting for [Use Draft Mode], display the [Custom Settings] dialog box by clicking [Settings] in the [Quality] sheet.

The overall print result is dark.

Cause 1 The setting for [Toner Density] is not appropriate.

Remedy Drag the [Toner Density] slider in the printer driver toward [Light].
In order to specify the setting for [Toner Density], display the [Custom Settings] dialog box by clicking [Settings] in the [Quality] sheet.

Cause 2 The printer is exposed to direct sunlight or strong light.

Remedy Move the printer to a place where it will not be exposed to direct sunlight or strong light. Alternatively, move the strong light source away from the printer.

The print is uneven.

Cause 1 Paper is too moist or too dry.

Remedy Replace the paper with appropriate one and print again. (See "Paper Requirements," on p. 2-2)

Cause 2 The toner cartridge is nearing the end of its life.

Remedy Display the [Consumables/Counters] dialog box, then replace the toner cartridge that is almost empty with a new toner cartridge. (See "Replacing Toner Cartridges," on p. 5-2)

Cause 3 The printer has not printed for a long period of time.

Remedy Set [Special Print Mode] to [Special Settings 8] in the printer driver. If this solves the problem, set [Special Print Mode] to [Off].
In order to specify the setting for [Special Print Mode], display the [Advanced Settings] dialog box by clicking [Finishing Details] in the [Finishing] sheet, and then clicking [Advanced Settings] in the [Finishing Details] dialog box.

Front or back of the printed paper has smudge marks.

Cause The fixing roller is dirty.

Remedy Clean the fixing roller. (See "Cleaning the Fixing Roller," on p. 5-22)

Smudge marks of spattering toner appear around the text.

Cause 1 Paper is inappropriate.

Remedy Replace the paper with one that can be used and print again. (See "Paper Requirements," on p. 2-2)

Cause 2 The printer is being used in a low-humidity environment.

Remedy Set [Special Print Mode] to [Special Settings 4] in the printer driver. If this solves the problem, set [Special Print Mode] to [Off].
In order to specify the setting for [Special Print Mode], display the [Advanced Settings] dialog box by clicking [Finishing Details] in the [Finishing] sheet, and then clicking [Advanced Settings] in the [Finishing Details] dialog box.

Images in which two or more colors are overlaid come out faint.

Cause 1 Paper is inappropriate.

Remedy Replace the paper with one that can be used with this printer. (See "Paper Requirements," on p. 2-2)

Cause 2 The printer is being used in a high-humidity environment.

Remedy Set [Special Print Mode] to [Special Settings 1] in the printer driver. If this solves the problem, set [Special Print Mode] to [Off].
In order to specify the setting for [Special Print Mode], display the [Advanced Settings] dialog box by clicking [Finishing Details] in the [Finishing] sheet, and then clicking [Advanced Settings] in the [Finishing Details] dialog box.

Thin lines or halftone areas come out faint.

Cause 1 Paper is inappropriate.

Remedy Replace the paper with one that can be used with this printer. (See "Paper Requirements," on p. 2-2)

Cause 2 The printer is being used in a high-humidity environment.

Remedy Set [Special Print Mode] to [Special Settings 3] in the printer driver. If this solves the problem, set [Special Print Mode] to [Off].
In order to specify the setting for [Special Print Mode], display the [Advanced Settings] dialog box by clicking [Finishing Details] in the [Finishing] sheet, and then clicking [Advanced Settings] in the [Finishing Details] dialog box.

Toner gets on the non-printed areas.

Cause When printing paper with a glossy surface, toner gets on the non-printed areas.

Remedy Set [Special Print Mode] to [Special Settings 9] in the printer driver. If this solves the problem, set [Special Print Mode] to [Off].
In order to specify the setting for [Special Print Mode], display the [Advanced Settings] dialog box by clicking [Finishing Details] in the [Finishing] sheet, and then clicking [Advanced Settings] in the [Finishing Details] dialog box.

Outlines in the areas dense in color are emphasized.

Cause Depending on the print data, outlines in the areas dense in color are sometimes emphasized.

Remedy Set [Special Print Mode] to [Special Settings 10] in the printer driver. If this solves the problem, set [Special Print Mode] to [Off].
In order to specify the setting for [Special Print Mode], display the [Advanced Settings] dialog box by clicking [Finishing Details] in the [Finishing] sheet, and then clicking [Advanced Settings] in the [Finishing Details] dialog box.

A portion of a page is not printed.

Cause 1 The scale factor is incorrect.

Remedy 1 Clear the [Manual Scaling] check box in the printer driver. If the check box is cleared, the scale factor will be set according to [Page Size] and [Output Size] automatically.
In order to specify the setting for [Manual Scaling], display the [Page Setup] sheet.

Remedy 2 Select the [Manual Scaling] check box in the printer driver, then specify an appropriate scale factor according to the paper size to be used.
In order to specify the setting for [Manual Scaling], display the [Page Setup] sheet.

Cause 2 The position of the paper is incorrect.

Remedy Load the paper properly. (See "Loading Plain Paper, Heavy Paper, Transparencies, or Labels in the Paper Source," on p. 2-14, "Loading Index Card Size Media in the Paper Source," on p. 2-26, "Loading Envelopes in the Paper Source," on p. 2-37, "Loading Custom Size Paper (Non-Standard Paper) in the Paper Source," on p. 2-47)

Cause 3 A document with no margins was printed.

Remedy Data cannot be printed within a 5 mm margin (10 mm for envelopes) on all sides of the paper. Secure a margin of 5 mm or more (10 mm or more for envelopes) around the data.

The printing position is skewed.

Cause 1 [Gutter] is specified.

Remedy Specify [Gutter] in the printer driver to [0].
In order to specify the setting for [Gutter], display the [Gutter Settings] dialog box by clicking [Gutter] in the [Finishing] sheet.

Cause 2	"Top Margin" and "Paper Position" in the application are not specified properly.
Remedy	Specify the settings for "Top Margin" and "Paper Position" in the application properly. (See the instruction manual supplied with the application)

The next page is printed from halfway across the previous page.

Cause	"Line Spacing" or "Lines/Page" in the application is not specified properly.
Remedy	Specify the settings for "Line Spacing" and "Lines/Page" in the application so that data fits in one page, and print again. (See the instruction manual supplied with the application)

Nothing is printed on paper.

Cause 1	The toner cartridge was installed with the sealing tape still attached.
Remedy	Take the toner cartridge out of the printer, pull out the sealing tape, and reinstall the toner cartridge. (See "Replacing Toner Cartridges," on p. 5-2)
Cause 2	Multiple sheets of paper were fed at a time.
Remedy	Align the paper stack in the paper cassette properly and load it again. If you are using transparencies or labels, fan them thoroughly and load them again. (See "Loading Plain Paper, Heavy Paper, Transparencies, or Labels in the Paper Source," on p. 2-14, "Loading Index Card Size Media in the Paper Source," on p. 2-26, "Loading Envelopes in the Paper Source," on p. 2-37, "Loading Custom Size Paper (Non-Standard Paper) in the Paper Source," on p. 2-47)

Toner does not fix onto paper completely.

Cause 1	Appropriate paper is not being used.
Remedy	Replace the paper with one that can be used with this printer. (See "Paper Requirements," on p. 2-2)
Cause 2	Coarse paper is being used.
Remedy 1	Set [Paper Type] to [Heavy Paper 1] or [Heavy Paper 2] in the printer. In order to specify the setting for [Paper Type], display the [Paper Source] sheet.
Remedy 2	Set [Special Print Mode] to [Special Settings 5] in the printer driver. If this solves the problem, set [Special Print Mode] to [Off]. In order to specify the setting for [Special Print Mode], display the [Advanced Settings] dialog box by clicking [Finishing Details] in the [Finishing] sheet, and then clicking [Advanced Settings] in the [Finishing Details] dialog box.

Cause 3 A problem has occurred inside the printer.

Remedy 1 If <Service Error> is displayed in the Printer Status Window, turn the power OFF, wait for 10 seconds or longer, and then turn the power ON again. This may clear the message.

Remedy 2 If the message does not disappear even after applying the Remedy 1, contact your local authorized Canon dealer for servicing.

Colored lines and text come out faint.

Cause Thin lines or text are being used.

Remedy Select the [Prioritize Printing of Colored Lines and Text] check box in the printer driver.
In order to specify the setting for [Prioritize Printing of Colored Lines and Text], display the [Custom Settings] dialog box by clicking [Settings] in the [Quality] sheet.

Colored text appears to be blurred.

Cause A bold font is being used for the colored text.

Remedy Set [Matching Method] to [Perceptual [Monitor Color Matched]] in the printer driver.
In order to specify the setting for [Matching Method], display the [Matching] sheet by selecting the [Manual Color Settings] check box in the [Quality] sheet, and then clicking [Color Settings].

Data is not printed in the correct color (specified color), or colored text appears blurred due to color shift.

Cause 1 Any of the toner cartridges are not installed properly.

Remedy Make sure that the toner cartridges are installed properly. (See "Replacing Toner Cartridges," on p. 5-2)

Cause 2 Any of the four color cartridges is almost out of toner, or the drum in any of the toner cartridges has deteriorated.

Remedy 1 Perform calibration. (See "Calibrating the Printer," on p. 5-17)

Remedy 2 Display the [Consumables/Counters] dialog box, then replace the toner cartridge that is almost empty with a new toner cartridge. (See "Replacing Toner Cartridges," on p. 5-2)

Cause 3 Appropriate paper is not being used.

Remedy Replace the paper with one that can be used and print again. (See "Paper Requirements," on p. 2-2)

Cause 4 Data was sent before completing calibration, such as when the printer was first turned ON.

Remedy Make sure that the ❍ (Ready) indicator is on before sending data to the printer.

The colors of thin lines or filled-in patterns are different from the specified colors, or do not appear at all.

Cause 1 Some colors cannot be reproduced due to the combination of colors or patterns.

Remedy 1 Adjust the colors in the application and print again.

Remedy 2 Change the patterns in the application and print again.

Cause 2 The color may appear different depending on the fill-pattern.

Remedy 1 Readjust to a darker color and print again.

Remedy 2 Reload paper to change the feeding direction, then print again.

Fill-patterns are not printed in the correct color (specified color).

Cause The fill-pattern of the print data and the dither pattern of the printer are interfering with one another.

Remedy 1 Print again without specifying a fill-pattern in the application.

Remedy 2 Set [Color Halftones] or [B & W Halftones] to [Gradation] or [Color Tone] in the printer driver.
In order to specify the setting for [Color Halftones] or [B & W Halftones], display the [Custom Settings] dialog box by clicking [Settings] in the [Quality] sheet.

The displayed color and printed color differ when printing photos, etc.

Cause The method for adjusting color on the screen (RGB) and in the printer (YMC) is different. Therefore, there may be cases when the color on the screen cannot be printed out exactly as it appears.

Remedy 1 Set [Matching Method] to [Perceptual [Monitor Color Matched]] in the printer driver.
In order to specify the setting for [Matching Method], display the [Matching] sheet by selecting the [Manual Color Settings] check box in the [Quality] sheet, and then clicking [Color Settings].

Remedy 2 Adjust [Gamma] in the printer driver.
In order to specify the setting for [Gamma], display the [Matching] sheet by selecting the [Manual Color Settings] check box in the [Quality] sheet, and then clicking [Color Settings].

Streaks appear in the gradated portions when printing diagrams with gradations.

Cause [Use Pure Black] is applied to the gray color portions of the "streaks" in the diagrams.

Remedy Set [Use Pure Black] to [Never] in the printer.
In order to specify the setting for [Use Pure Black], display the [Custom Settings] dialog box by clicking [Settings] in the [Quality] sheet.

The back of the printed paper has smudge marks.

Cause The size of the print data was larger than that of the loaded paper.

Remedy Check if the size of the print data matches that of the loaded paper.

Paper Problems

Paper comes out wrinkled.

Cause 1 Paper is loaded in the paper cassette or manual feed slot at an angle.

Remedy Load the paper in the paper cassette or manual feed slot straight. (See "Loading Plain Paper, Heavy Paper, Transparencies, or Labels in the Paper Source," on p. 2-14, "Loading Index Card Size Media in the Paper Source," on p. 2-26, "Loading Envelopes in the Paper Source," on p. 2-37, "Loading Custom Size Paper (Non-Standard Paper) in the Paper Source," on p. 2-47)

Cause 2 Paper is damp since the paper has been stored in unsuitable condition.

Remedy Replace the paper with new one and print again. (See "Paper Requirements," on p. 2-2)

Paper curls.

Cause 1 Paper is damp since the paper has been stored in unsuitable condition.

Remedy Replace the paper with new one and print again. (See "Paper Requirements," on p. 2-2)

Cause 2 Paper is inappropriate.

Remedy Replace the paper with one that can be used with this printer. (See "Paper Requirements," on p. 2-2)

Cause 3 The paper is too thin.

Remedy 1 Set [Paper Type] to [Plain Paper L] in the printer driver.
In order to specify the setting for [Paper Type], display the [Paper Source] sheet.

Remedy 2 If the printed side curls outward, set [Special Print Mode] to [Special Settings 6]; if the non-printed side curls outward, set to [Special Settings 7]. If this solves the problem, set [Special Print Mode] to [Off].
In order to specify the setting for [Special Print Mode], display the [Advanced Settings] dialog box by clicking [Finishing Details] in the [Finishing] sheet, and then clicking [Advanced Settings] in the [Finishing Details] dialog box.

Flaps of the envelopes stick to the body.

Cause 1 Envelopes are inappropriate.

Remedy Replace the envelopes with those that can be used and print again. (See "Paper Requirements," on p. 2-2)

Cause 2 The printer is being used in a high-humidity environment.

Remedy Set [Special Print Mode] to [Special Settings 2] in the printer driver. If this solves the problem, set [Special Print Mode] to [Off].
In order to specify the setting for [Special Print Mode], display the [Advanced Settings] dialog box by clicking [Finishing Details] in the [Finishing] sheet, and then clicking [Advanced Settings] in the [Finishing Details] dialog box.

When Nothing is Printed

Check the following items if nothing is printed when printing from an application:

1 Check if any error message is displayed in the Printer Status Window.

IMPORTANT

If not, uninstall the CAPT software and install it again. (See "Uninstalling the CAPT Software," on p. 3-75)

2 Print a test page.

- **For Windows 98/Me**
  - ❑ Click [Print Test Page] in the [General] sheet in the [Printer Properties] dialog box.
- **For Windows 2000/XP/Server 2003**
  - ❑ Click [Print Test Page] in the [General] sheet in the [Printer Properties] dialog box.

■ When the test page is printed correctly

Printing can be performed from the CAPT software. Check the application to make sure that all the settings are specified properly.

■ When the test page cannot be printed

Uninstall the CAPT software, reinstall it, and then print a test page again. (See "Uninstalling the CAPT Software," on p. 3-75)

Installation Problems

If "USB Class Driver" and "LBP5000 Printer Driver" cannot be installed properly, perform the following procedure to check problems.

NOTE

For details on problems on the network installation, see "Chapter 4 Troubleshooting" in Network Guide.

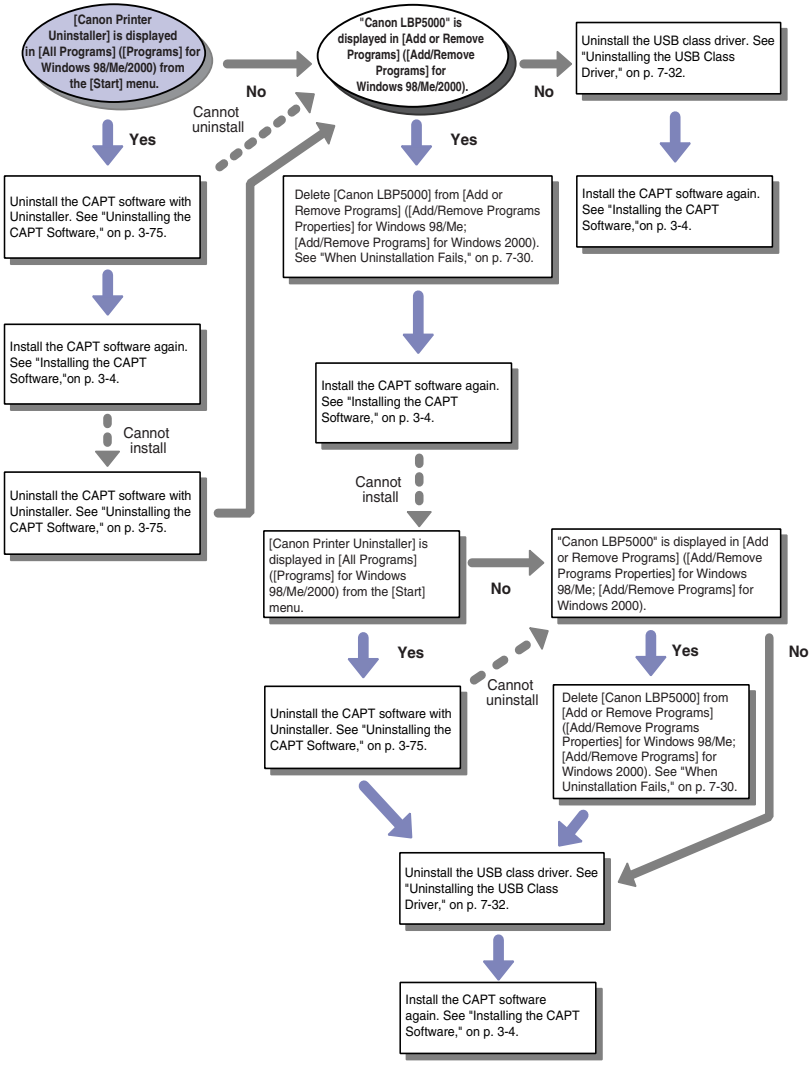

When Uninstallation Fails

If you cannot uninstall the CAPT software using the Uninstaller that was created during installation, use the following procedure to uninstall the CAPT software from [Add or Remove Programs] ([Add/Remove Programs Properties] for Windows 98/Me; [Add/Remove Programs] for Windows 2000).

1 From the [Start] menu, select [Control Panel], and then click [Add or Remove Programs].

For Windows 98/Me/2000: From the [Start] menu, select [Settings] → [Control Panel], and then double-click [Add/Remove Programs].
For Windows Server 2003: From the [Start] menu, select [Control Panel] → [Add or Remove Programs].

2 Select [Canon LBP5000] in the [Add or Remove Programs] dialog box, then click [Change/Remove].

For Windows 2000: Select [Canon LBP5000] in the [Add/Remove Programs] dialog box, then click [Change/Remove].
For Windows 98/Me: Select [Canon LBP5000] in the [Add/Remove Programs Properties] dialog box, then click [Add/Remove].

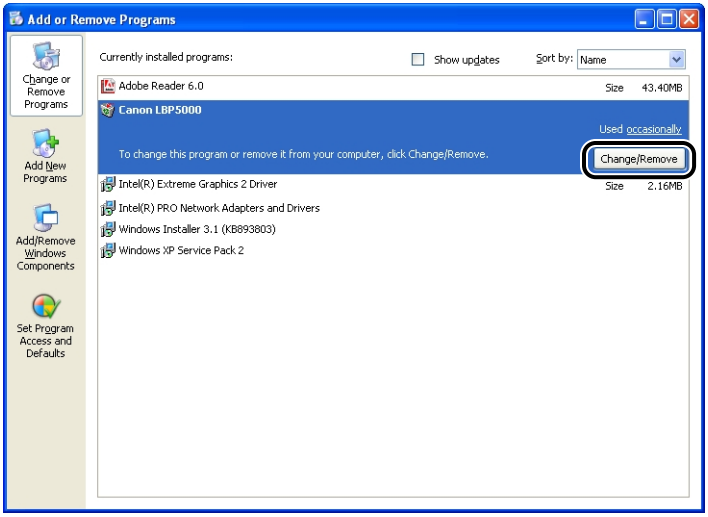

NOTE

If [Canon LBP5000] is not displayed in the [Add or Remove Programs] dialog box (the [Add/Remove Programs] dialog box for Windows 2000; the [Add/Remove Programs Properties] dialog box for Windows 98/Me), perform "Uninstalling the USB Class Driver" (See p. 7-32), and then install the CAPT software again.

3 Select the name of this printer, then click [Delete].

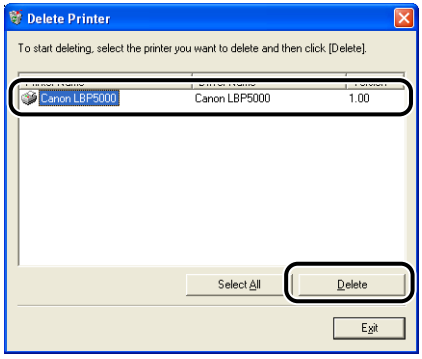

4 Click [Yes].

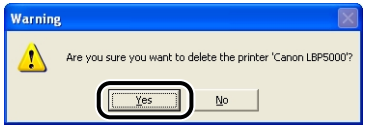

Uninstallation starts. Please wait a moment.

5 Click [Exit].

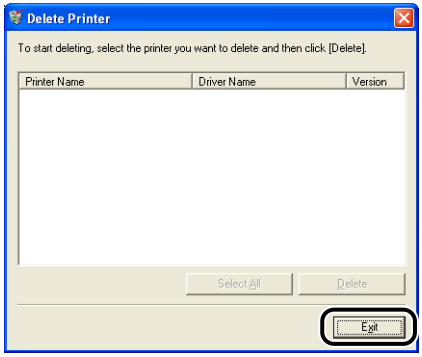

The [Delete Printer] dialog box closes.

6 Restart Windows.

Uninstalling the USB Class Driver

Uninstalling the USB class driver is required when you cannot install the CAPT software properly after uninstalling it once or when you cannot uninstall the CAPT software.

1 **Make sure that the computer is connected to the printer with the USB cable and that the printer is ON.**

2 **From the [Start] menu, select [Control Panel], and then click [Add or Remove Programs].**

For Windows 98/Me/2000: From the [Start] menu, select [Settings] → [Control Panel], and then double-click [Add/Remove Programs].
For Windows Server 2003: From the [Start] menu, select [Control Panel] → [Add or Remove Programs].

3 **Make sure that [Canon LBP5000] is not displayed in the [Add or Remove Programs] dialog box, and then click [✕].**

For Windows 2000: Make sure that [Canon LBP5000] is not displayed in the [Add/Remove Programs] dialog box, and then click [✕].
For Windows 98/Me: Make sure that [Canon LBP5000] is not displayed in the [Add/Remove Programs Properties] dialog box, and then click [✕].

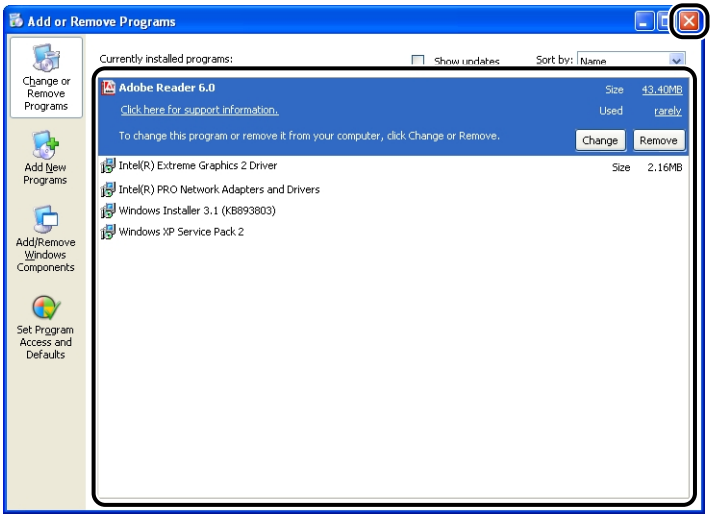

NOTE

If [Canon LBP5000] is displayed in the [Add or Remove Programs] dialog box (the [Add/Remove Programs] dialog box for Windows 2000; the [Add/Remove Programs Properties] dialog box for Windows 98/Me), see "When Uninstallation Fails" (p. 7-30) to delete [Canon LBP5000] from the [Add or Remove Programs] dialog box (the [Add/Remove Programs] dialog box for Windows 2000; the [Add/Remove Programs Properties] dialog box for Windows 98/Me).

4 From the [Start] menu, select [Control Panel], and then click [Performance and Maintenance] → [System].

For Windows 98/Me/2000: From the [Start] menu, select [Settings] → [Control Panel], and then double-click the [System] icon.
For Windows Server 2003: From the [Start] menu, select [Control Panel] → [System].

5 Click [Hardware] → [Device Manager], and then double-click [Universal Serial Bus controllers].

For Windows 98/Me: Display the [System Properties] dialog box, click the [Device Manager] tab, and then double-click [Universal Serial Bus controllers].

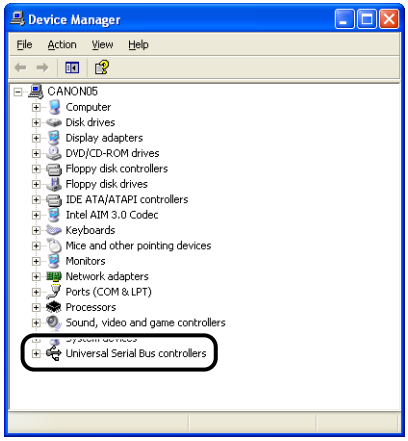

6 Right-click [USB Printing Support], then select [Uninstall] from the pop-up menu.

For Windows 98, select [Canon LBP5000], for Windows Me, select [Canon CAPT USB Device], and then click [Remove].

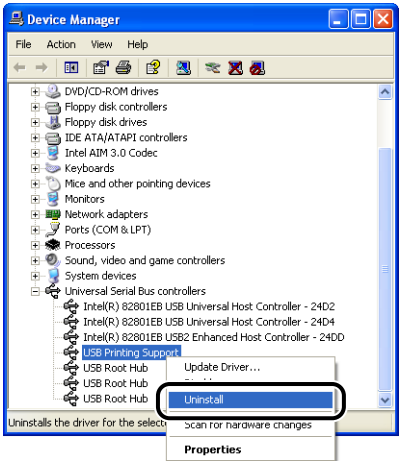

IMPORTANT

- If the USB class driver is under [Other Devices], the printer is not installed properly. According to your operating system, select and delete any one of [Canon LBP5000], [Canon CAPT USB Device], or [Unknown device].
- Never delete any drivers for other devices. If you delete them by mistake, Windows may not operate properly.
- If the USB class driver is not installed properly, [USB Printing Support] (for Windows 2000/XP/Server 2003), [Canon CAPT USB Device] (for Windows Me), or [Canon LBP5000] (for Windows 98) is not displayed.

7 When the [Confirm Device Removal] dialog box appears, click [OK].

8 Click [✕].

[Device Manager] closes.

9 Disconnect the USB cable from the computer, then restart Windows.

After Windows restarts, reinstall the CAPT software. (See "Installing the CAPT Software," on p. 3-4)

Problems on Local Installation

When installing the printer driver from the CD-ROM, the printer is not recognized automatically even after the USB cable is connected.

Cause 1 The USB cable has already been connected and the printer is ON before installing the printer driver.

Remedy Turn the printer OFF and disconnect the USB cable. Then, connect the USB cable again and turn the printer ON.

Cause 2 The printer is OFF.

Remedy Turn the printer ON.

Cause 3 The USB cable is not connected properly.

Remedy Make sure that the printer and computer are connected with the USB cable properly.

Cause 4 An inappropriate USB cable is being used.

Remedy Use a USB cable appropriate for the USB interface of this printer. The USB interface of this printer is USB 2.0 Hi-Speed (Windows 2000/XP/Server 2003 only) and USB Full-Speed (USB1.1 equivalent).
Use a USB cable with the following symbol.

Cause 5 The printer driver cannot be installed from CD-ROM Setup.

Remedy Install the printer driver with plug and play. (See "Installing with Plug and Play," on p. 3-13)

[Local printer attached to this computer]* cannot be selected in the [Add Printer Wizard] dialog box (Windows 2000/XP/Server 2003).

Cause	Installation was performed by a user who is not a member of Administrators.
Remedy	CAPT (Canon Advanced Printing Technology) software needs to be installed by a member of Administrators. Have a user with the correct permissions to install the software.

* On Windows 2000, this becomes [Local Printer].

Installation Problems When the Printer is Shared on a Network

The print server to be connected cannot be found.

Cause 1	The print server has not been started up.
Remedy	Start up the print server.
Cause 2	The printer is not specified as a shared printer.
Remedy	Specify the printer as a shared printer in the [Printer Properties] dialog box.
Cause 3	The user does not have permission to access the print server or printer.
Remedy	Ask your network administrator to change the user permissions.

Problems on Installing the Network Board

On checking the operation of the network board, if you find that all the indicators on the network board are off, or the ERR indicator is on or keeps blinking for a long time and does not go off, take the following measures.

NOTE

For details on problems on installing the CAPT software, see "Chapter 4 Troubleshooting" in Network Guide.

All the indicators on the network board are off.

Cause 1	The LAN cable is not connected properly or broken.
Remedy 1	Remove the LAN cable once, then connect it again.
Remedy 2	Replace the LAN cable with another one, then connect it.
Cause 2	The cable is connected to the UP-LINK (cascade) port on the hub.
Remedy 1	Connect the LAN cable to a port with a "X" mark.
Remedy 2	If the hub has a UP-LINK (cascade) switch, switch to "X".
Cause 3	A cross LAN cable is being used.
Remedy 1	Replace the cable with a straight LAN cable.
Remedy 2	Connect the cross LAN cable to the UP-LINK (cascade) port on the hub. If the hub has a UP-LINK (cascade) switch, switch to "=".

NOTE

A cross LAN cable is a cable used to connect a printer and computer directly.

Cause 4	Cannot communicate with the hub.
Remedy 1	Make sure that the power of the hub is on.
Remedy 2	Set the DIP switches according to the transmission speed of the connected hub. (See "Setting the Network Board," on p. 6-26)
Remedy 3	Replace the hub.
Cause 5	The network board is not installed properly.
Remedy	Remove the network board once, then install it again.

Cause 6	The hardware of the network board is in an abnormal condition.
Remedy	Report the problems to your local authorized Canon dealer.

The ERR indicator on the network board is on.

Cause	The network cable is disconnected or broken, or the network board is not installed properly.
Remedy 1	Make sure the network cable is connected properly.
Remedy 2	Replace the network cable with a proper one and check if there is no disconnection or damage.
Remedy 3	If the ERR indicator still comes on even after applying the Remedy 1 and 2, contact your local authorized Canon dealer for servicing.

The ERR indicator on the network board blinks at an interval of four times.

Cause	The DIP switch 1 on the network board is ON.
Remedy	Set the DIP switch 1 to OFF once.

The ERR indicator on the network board keeps blinking.

Cause	The hardware of the network board is in an abnormal condition.
Remedy	Contact your local authorized Canon dealer for servicing.

Miscellaneous Problems

LBP5000 does not function properly.

Cause 1 LBP5000 is not specified as the default printer.

Remedy Specify it as the default printer.

Cause 2 The CAPT software may not be installed properly.

Remedy In order to check if the CAPT software is installed properly, print from an application. If you cannot print properly, uninstall the CAPT software and install it again. (See "Uninstalling the CAPT Software," on p. 3-75, "Installing the CAPT Software," on p. 3-4)

The printer stops printing temporarily.

Cause When printing after the paper is changed from narrower one to wider one, the printer cools down the fixing unit so that the print quality is maintained.

Remedy 1 Please wait a moment. The printer cools down the fixing unit automatically. When the printer finished cooling down the fixing unit, it stops operation and becomes ready to print. If the printer was in the middle of printing, it resumes the job after finishing the cool down process.

Remedy 2 In the Printer Status Window, select [Device Settings] from the [Options] menu, point to [Small-size Paper Special Setting], and then set [Small-size Paper Special Process] to [Speed Priority] (However, previously printed text or residual images may be printed on both sides of the printed paper).

CD-ROM Setup does not appear automatically. (Windows 98/Me)

Cause [Auto insert notification] is not selected.

Remedy Display the properties for the CD-ROM drive from [Device Manager] and select [Auto insert notification] in the [Settings] sheet.

When the printer is shared over a network, it takes a long time to obtain the status in the Printer Status Window.

Cause	You are using a computer with Windows XP Service Pack 2 or another operating system equipped with Windows Firewall as the print server, and Windows Firewall is configured to block communication with the client computers.
Remedy	Start up the print server, then configure Windows Firewall to unblock communication with the client computers. (See "Windows Firewall," on p. 8-15)

The printer status is not displayed properly in the Printer Status Window when the printer is shared over a network.

Cause	You are using a computer with Windows XP Service Pack 2 or another operating system equipped with Windows Firewall as a client computer, and Windows Firewall is blocking communication with the print server.
Remedy	Configure Windows Firewall to unblock communication with the print server. (See "Windows Firewall," on p. 8-15)

Confirming the Printer Features

This printer is provided with a function of Configuration Page Print that allows you to confirm the optional settings of the printer, settings for [Device Settings] in the [Options] menu in the Printer Status Window, and the current printer status such as [Number of Total Printed Pages]. The printer driver is also provided with a function of Network Status Print that allows you to check the version of the optional network board or confirm the TCP/IP settings. Use these functions when required after installing and connecting the printer, for example when you want to check the operation.

NOTE

- Configuration Page Print is designed to be printed on A4 size paper. Load A4 size paper.
- For details on Network Status Print, see "Chapter 4 Troubleshooting" in Network Guide.

1 Display the Printer Status Window.

For details on methods for displaying the Printer Status Window, see "Displaying the Printer Status Window," on p. 4-88.

2 From the [Options] menu in the Printer Status Window, select [Utility] → [Configuration Page Print].

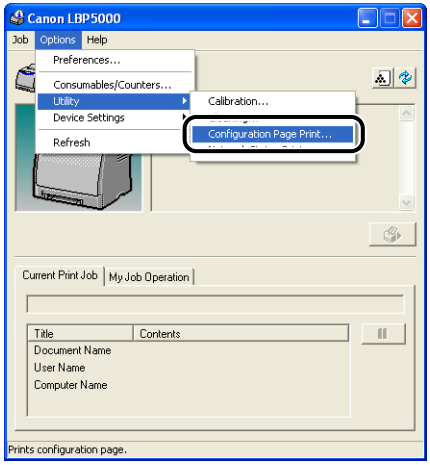

A confirmation message is displayed.

3 Click [OK].

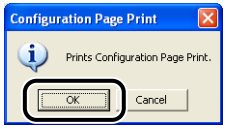

Configuration Page Print is printed.

4 Confirm the contents of the Configuration Page Print.

Configuration Page Print prints information as shown in the following figure. You can confirm the optional settings of the printer, settings for [Device Settings] in the [Options] menu in the Printer Status Window, and the current printer status such as [Number of Total Printed Pages].

IMPORTANT

This is a sample of Configuration Page Print. The contents may differ from the Configuration Page Print printed by your computer.

Canon **Configuration Page**

```
Options
        Cassette 2                                          : Exist
        Network Board                                       : Exist

Device Settings
        Sleep Mode Settings
                Sleep Mode                                  : On
                Time to Enter Sleep Mode                    : 30 minutes
        Calibration Settings
                Periodical Calibration Timer                : Off
                Calibration Time                            : 0:00
                Auto Calibration at Regular Interval        : Off
        Registered Paper Size in Cassettes
                Cassette 1                                  : A4
                Cassette 2                                  : B5
        Warning Display
                Toner Cartridge Replacement Notice          : On
        Assisting Print Setting
                Print Mixed Color/B&W Docs at Hi Speed      : On
        Small-size Paper Special Setting
                Small-size Paper Special Process            : Image Quality Priority
        Printer Date & Time                                 : 9/13/2005 11:48 PM

Product Name                                                : LBP5000
Controller Version                                          : XXXXX
Engine Version                                              : XXXXX
Driver Version                                              : XXXXXXXXXX

USB
        Vendor ID                                           : 0x04a9
        Product ID                                          : 0x2679
        Serial Number                                       : XXXXXXXXXXXX

Counter
        Date and Time                                       : 9/13/2005 11:48 PM
        Number of Total Printed Pages                       :    248
        Color Print Pages                                   :    228
        B&W  Print Pages                                    :     20
        Number of Jobs                                      :    149
```

Canon and Canon logo are trademarks of CANON INC.

Appendix

8
CHAPTER

This chapter describes the printer specifications and index.

Specifications 8-2
Hardware Specifications 8-2
Software Specifications 8-4
Dimensions of Each Part 8-5
About Color Printing 8-7
The Three Primary Colors of Light and Color 8-7
Method for Expressing Color 8-8
About Color Printing 8-9
Achieving More Beautiful Color Printing 8-10
NetSpot Device Installer 8-12
Print Monitor Installer 8-13
NetSpot Console 8-14
Windows Firewall 8-15
Configuring Windows Firewall to Unblock Communication with the Client Computers 8-16
Configuring Windows Firewall to Block Communication with the Client Computers 8-17
Configuring Windows Firewall to Unblock Communication with the Print Server 8-19
Index 8-20
Location of the Serial Number 8-25

Specifications

Hardware Specifications

Type		Desktop Page Printer
Printing method		Electrophoto Method (On-demand fixing)
Print speed **Plain paper (60 to 90 g/m^2)**		When printing A4 continuously 8 pages/min. * Print speed may drop in stages depending on the paper size, paper type, print copies, and the settings of the fixing mode. (This is because the safety function that prevents damage caused by heat becomes active.)
Warm-up time **(20°C (68°F))**		0 second (190 seconds or less when the printer is ON)* * 285 seconds or less immediately after the toner cartridges are replaced
First print time		When printing A4 20 seconds or less * May vary depending on the output environment.
Paper size	**Cassette 1**	A4, B5, A5, Legal, Letter, Executive, Envelope DL, Envelope COM10, Envelope C5, Envelope Monarch, Envelope B5, Index Card, Custom Paper Size (width 76.2 to 215.9 mm, length 127.0 to 355.6 mm) Paper capacity: approx. 250 sheets (64 g/m^2)
	Cassette 2 (Optional)	
	Manual feed slot	A4, B5, A5, Legal, Letter, Executive, Envelope DL, Envelope COM10, Envelope C5, Envelope Monarch, Envelope B5, Index Card, Custom Paper Size (width 76.2 to 215.9 mm, length 127.0 to 355.6 mm) Paper capacity: 1 sheet
Paper output		Face-down
Output capacity		Output tray: approx. 125 sheets (64 g/m^2)

Noise (Sound value released based on ISO9296)		Audio power level During standby: Background noise level During operation: 60 dB or less Sound pressure level (Bystander position) During standby: 25 dB [A] (Background noise level) or less During operation: 50 dB [A] or less
Operating environment (Printer unit only)		Operating environment temperature: 10 to 30°C (50 to 86°F) Humidity: 10 to 80 % RH (no condensation)
Host interface		USB interface - Windows 98/Me: USB Full-Speed (USB1.1 equivalent) - Windows 2000/XP/Server 2003: USB 2.0 Hi-Speed/USB Full-Speed (USB1.1 equivalent)
User interface		8 LED indicators
Expansion slot		1
Power supply		110 - 127 V (±10 %) 50/60 Hz (±2 Hz) 220 - 240 V (±10 %) 50/60 Hz (±2 Hz)
Power consumption (at temperature of 20°C (68°F))		110 - 127 V Average during operation: approx. 200 W*1 Average during standby: approx. 17 W*1 Average during the sleep mode: approx. 10 W*1 Maximum: 746 W*2 or less 220 - 240 V Average during operation: approx. 207 W*1 Average during standby: approx. 18 W*1 Average during the sleep mode: approx. 11 W*1 Maximum: 769 W*2 or less *1 When the printer is with standard equipment. *2 However, the instantaneous peak on startup shall not be counted.
Consumables	**Toner Cartridge**	- Canon Toner Cartridge (Black) Printable pages: approx. 2,500 pages* * Canon Genuine Cartridge, and for A4 or Letter size paper at 5 % page coverage with the default print density setting
		- Canon Toner Cartridge (Yellow) - Canon Toner Cartridge (Magenta) - Canon Toner Cartridge (Cyan) Printable pages: approx. 2,000 pages* * Canon Genuine Cartridge, and for A4 or Letter size paper at 5 % page coverage with the default print density setting

Weight	**Printer and included parts**	Printer unit (excluding the toner cartridges).....approx. 16 kg Toner cartridge (each) .....approx. 0.6 kg
	Consumables and optional accessories	Toner cartridge (Canon Genuine Cartridge) (each) .....approx. 0.6 kg Paper feeder unit PF-92 (including the cassette) .....approx. 3.7 kg

Software Specifications

Printing software	CAPT (Canon Advanced Printing Technology)
Printable area	Data cannot be printed within a 5 mm margin on all sides of the paper. (For envelopes, 10 mm margin on all sides)

Dimensions of Each Part

■ Printer

- Standard state

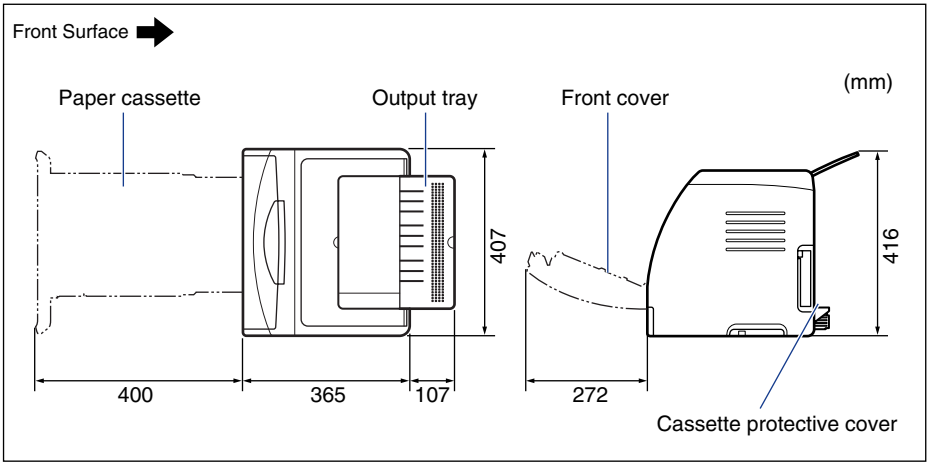

- State with the paper feeder installed

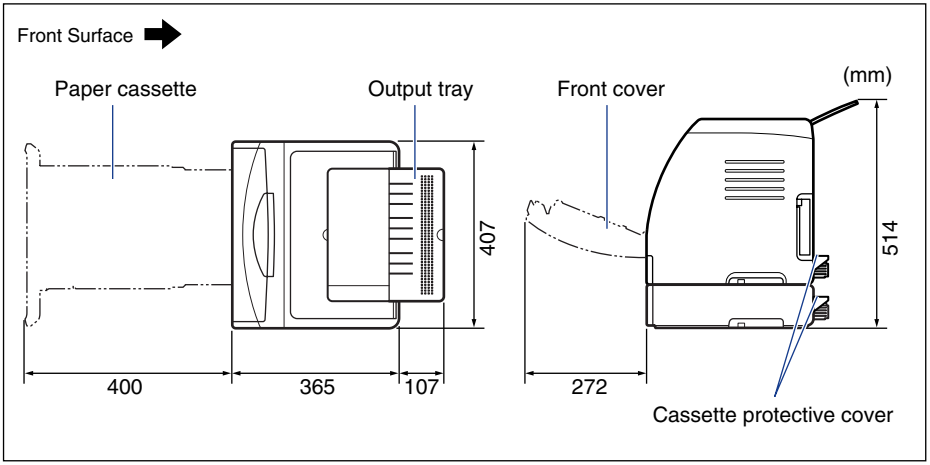

■ Paper Feeder Unit PF-92

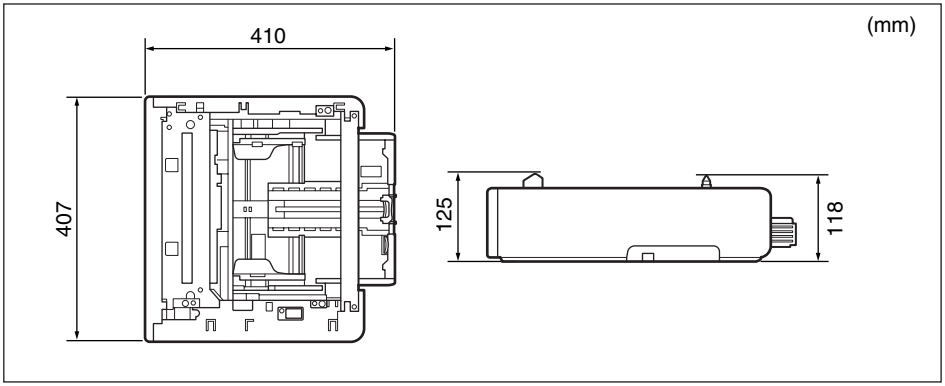

About Color Printing

This section describes the fundamentals of colors and the way this printer reproduces colors.

The Three Primary Colors of Light and Color

The colors that you see on a computer screen are reproduced from the three basic colors red, green and blue. The 3 primary colors of light, which are red, green and blue, can be combined to give white (additive color mixing).

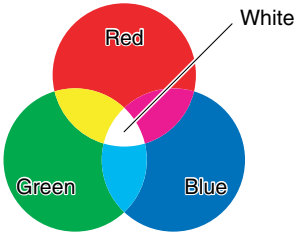

A color printer, however, does not use the 3 primary colors of light, but uses the same 3 primary colors as used in paintings to reproduce colors. If the 3 primary colors of paint, C (cyan), M (magenta) and Y (yellow) are mixed together, the resulting color is black (subtractive color mixing).

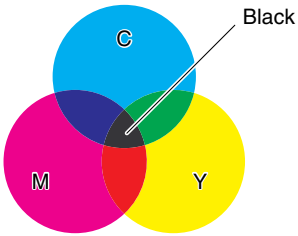

The three primary colors of light and color are thus in a complementary color relationship.
The red in light and cyan in color, green in light and magenta in color, and blue in light and yellow in color complement one another.

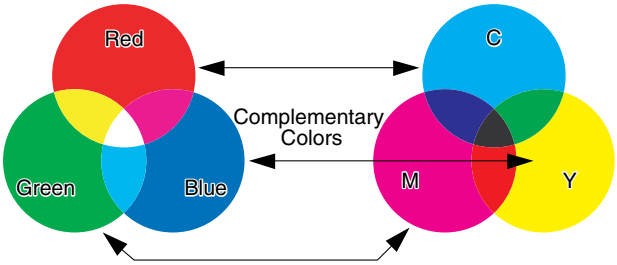

Method for Expressing Color

Creating colors for painting involves mixing the colors on a palette to get a match. In a computer display and printer, it is not possible to mix colors to match in the same way as paints, so colors are reproduced by groups of colored dots.

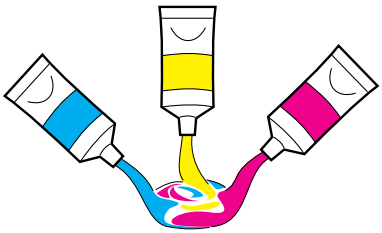

Paints

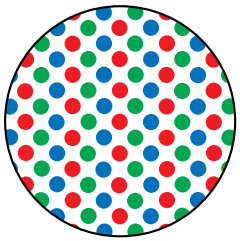

On a Monitor or Printer

On the computer display, various colors are reproduced by the intensity of three red, green, and blue dots.

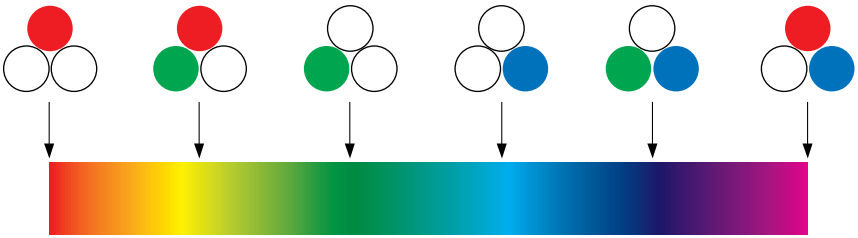

Color Bar

In the case of a printer, it is not possible to change the intensity of toner colors. Because of this, a much larger number of dots are used compared to a computer display, and various colors are reproduced by adding K (black) to the C (cyan), M (magenta) and Y (yellow). This means that higher resolution color prints are possible the smaller these dots are.

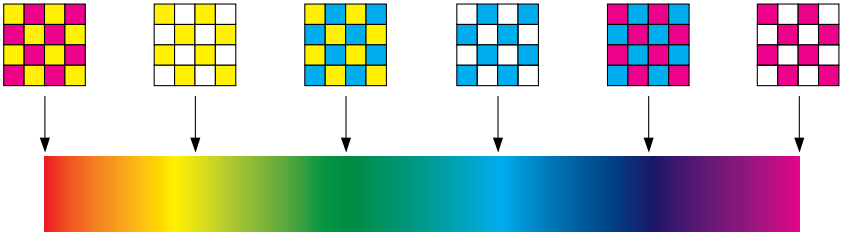

Color Bar

About Color Printing

A color printer expresses the shape and color of images in groups of minute C (Cyan), M (Magenta), Y (Yellow), and B (Black) dots.
Therefore, image data input to the printer is divided into cyan, magenta, yellow, and black.

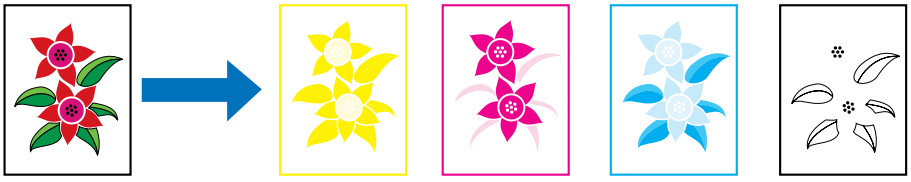

The data is reproduced separately by each toner cartridge, and the toner is transferred one after another.

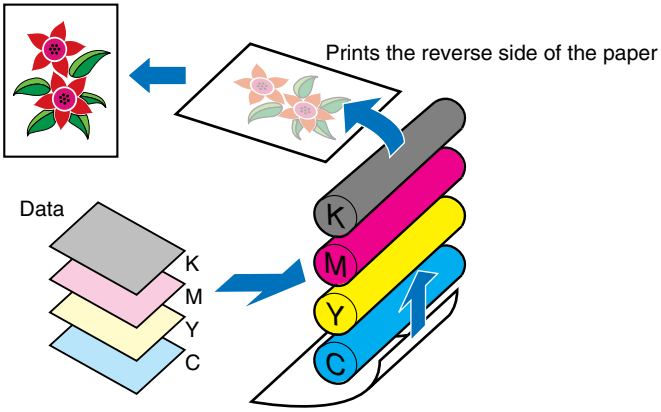

The data for all four colors is then transferred onto paper, and the paper passes through the fixing unit and is output.

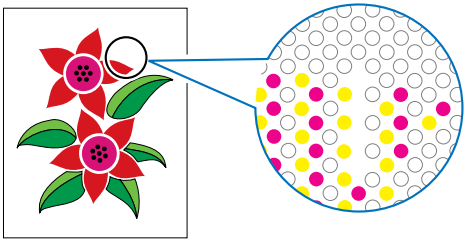

Achieving More Beautiful Color Printing

If the color in the print are not as expected, or the image quality is low, or the printout takes a long time, the printer performance is halved. By making minor adjustments and taking a little bit of care, we can make sure we get 100% out of the printer.

■ Adjusting the color on the display

Colors that you can see on the computer display are not limited to true colors. If we perform a color print based on the colors we can see on the computer display with the aim of matching those colors, the printed colors will be a little different.
Use the color samples or color adjustment tools that come with the application software to adjust the displayed colors to the colors that are actually printed.

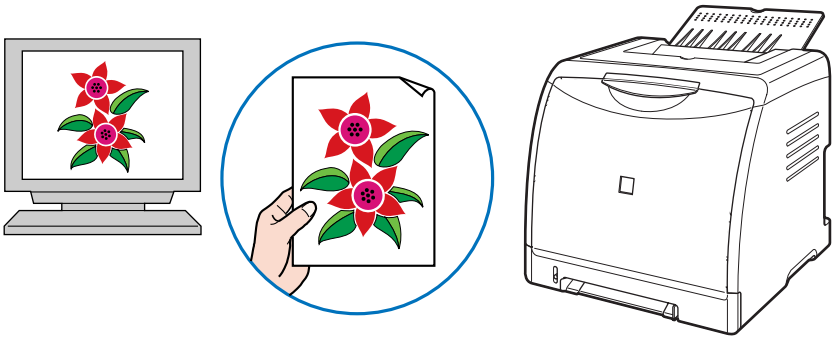

■ Adjusting the resolution

It does not matter how high the resolution of printing data is, you cannot get better picture quality than the resolution of the printer. A resolution of 600 dpi at printer sizes is sufficient. If the resolution of print data is too high, print processing will take a large amount of time, and the data size will also grow. Conversely, if the data resolution is too low, you cannot achieve sufficient image quality.
Check the dimensions and resolution of print data using an image processing application, and set the resolution to 300 dpi or 200 dpi.

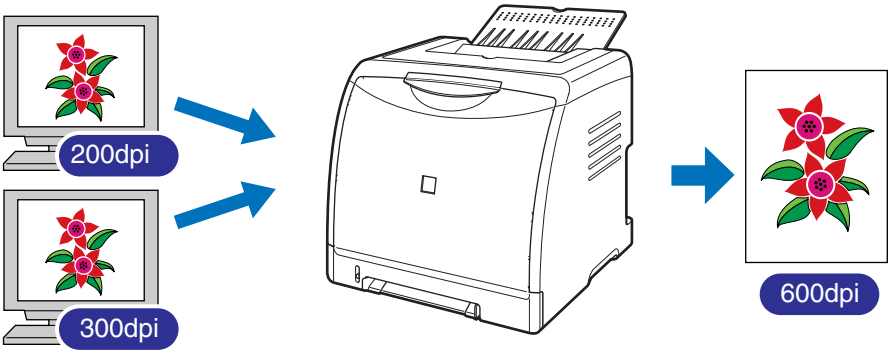

NOTE

For details on specifying the settings for [Quality], see "[Quality] Sheet," on p. 4-37.

■ Using the draft mode for confirming the text and layout

When checking the contents or layout of a document, print in the draft mode if you want to check the text or positions.

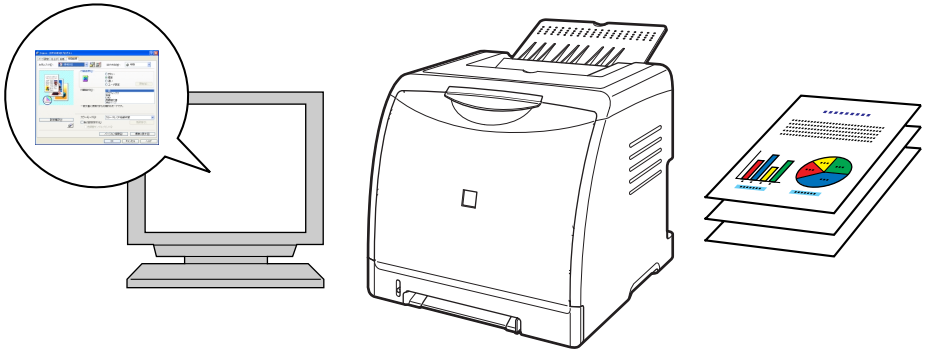

NOTE

For details on specifying the draft mode, see "[Quality] Sheet," on p. 4-37.

NetSpot Device Installer

The supplied CD-ROM includes the "NetSpot Device Installer", which is a utility that can initialize the settings of a printer connected to the network. The NetSpot Device Installer is software that allows you to easily initialize the settings of printers connected to the network.

For more details on NetSpot Device Installer, see "Network Guide".

NOTE

When the printer driver is installed from CD-ROM Setup, the initial settings for the network are performed automatically. Use "NetSpot Device Installer" as needed when you want to reset the IP address manually without using CD-ROM Setup.

Print Monitor Installer

The supplied CD-ROM includes "Print Monitor Installer" that creates a port (Canon CAPT Print Monitor) for connecting your computer to the printer on a TCP/IP network, as well as the printing software (CAPT). For details on Canon CAPT Print Monitor, see "Network Guide".

NOTE

When the printer driver is installed from CD-ROM Setup, a port (Canon CAPT Print Monitor) is created automatically. Use "Print Monitor Installer" as needed when you want to create the port without using CD-ROM Setup.

NetSpot Console

NetSpot Console is a utility program for managing printers that are connected to the network. NetSpot Console allows you to view a list of printers, display a printer map, specify detailed protocol settings, monitor printer states, perform job operations, and configure and view a variety of printer information using a web browser.
For more details on NetSpot Console, see "NetSpot Console User's Guide".

NOTE

You can download NetSpot Console from the Canon website.

Windows Firewall

Windows Firewall is a feature of Windows XP Service Pack 2 and other operating systems that protects your computer by blocking unauthorized access over the network.

Because of this, you need to configure Windows Firewall to unblock communication if you are using the printer with an operating system that is equipped with Windows Firewall.

The following settings are required on the print server (the computer to which the printer is directly connected) and client computers (the computers that use the printer via the network).

	Setting	See
Print server	■ When installing CAPT Software from CD-ROM Setup The [Warning] dialog box appears during the installation. Click [Yes] to configure Windows Firewall to unblock communication with the client computers. 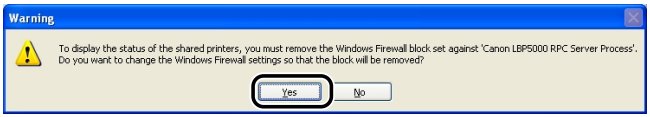 	See p. 3-5
	■ When installing CAPT Software from [Add Printer Wizard] or [Windows Explorer] Configure Windows Firewall to unblock communication with the client computers using "CAPT Windows Firewall Utility".	See p. 8-16
Clients	Configure Windows Firewall to unblock communication with the print server.	See p. 8-19

IMPORTANT

If you want to copy "CAPT Windows Firewall Utility" to your hard disk to run it, copy all of the files (CNAC4FW.EXE, CAPTRGFW.DLL, and CNAC4FW.INI) from the [WF_UTIL] folder on the supplied "LBP5000 User Software" CD-ROM to your hard disk.

Configuring Windows Firewall to Unblock Communication with the Client Computers

1 **Insert the supplied "LBP5000 User Software" CD-ROM into the CD-ROM drive.**

If CD-ROM Setup appears, click [Exit].

2 **From the [Start] menu, select [My Computer], right-click the CD-ROM icon, and then select [Open] from the pop-up menu.**

3 **Double-click [English] → [WF_UTIL] → [CNAC4FW.EXE].**

[CAPT Windows Firewall Utility] runs.

IMPORTANT

You can also run the utility by selecting [Run] from the [Start] menu, entering "D:\English\WF_UTIL\CNAC4FW.EXE", and then clicking [OK]. (The CD-ROM drive name is indicated as "D:" in this manual. The CD-ROM drive name may differ depending on the computer you are using.)

4 **Click [Unblock].**

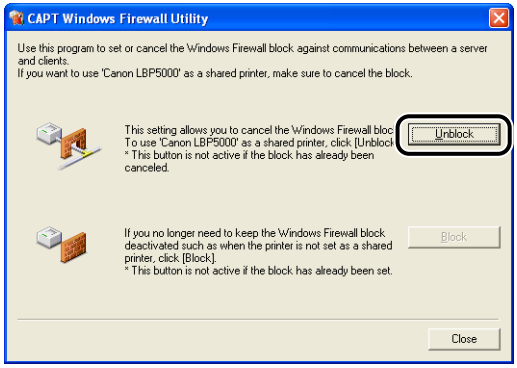

NOTE

You cannot click [Unblock] if the firewall is already configured to unblock communication with client computers.

5 Click [OK].

NOTE

To check if the Windows Firewall block has been properly cleared, select [Control Panel] from the [Start] menu, then click [Network and Internet Connections] → [Windows Firewall].
Make sure that the [Canon LBP5000 RPC Server Process] check box is selected in the [Exceptions] sheet in the [Windows Firewall] dialog box.

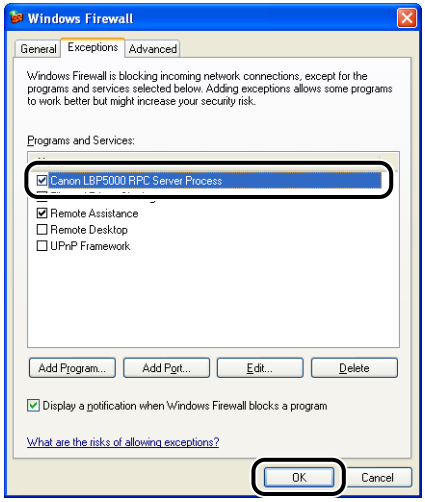

Windows Firewall is now configured to unblock communication with client computers.

Configuring Windows Firewall to Block Communication with the Client Computers

1 Insert the supplied "LBP5000 User Software" CD-ROM into the CD-ROM drive.

If CD-ROM Setup appears, click [Exit].

2 From the [Start] menu, select [My Computer], right-click the CD-ROM icon, and then select [Open] from the pop-up menu.

3 Double-click [English] → [WF_UTIL] → [CNAC4FW.EXE].

[CAPT Windows Firewall Utility] runs.

IMPORTANT

You can also run the utility by selecting [Run] from the [Start] menu, entering "D:\English\WF_UTIL\CNAC4FW.EXE", and then clicking [OK]. (The CD-ROM drive name is indicated as "D:" in this manual. The CD-ROM drive name may differ depending on the computer you are using.)

4 Click [Block].

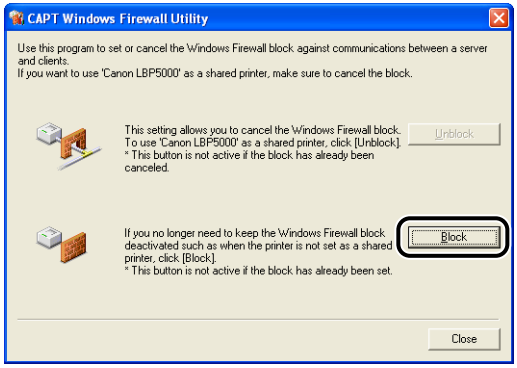

NOTE

You cannot click [Block] if Windows Firewall is already configured to block communication with client computers.

5 Click [OK].

Windows Firewall is now configured to block communication with the client computers.

Configuring Windows Firewall to Unblock Communication with the Print Server

IMPORTANT

If you do not perform the following settings on the client computers, the printer status may not be displayed properly in the Printer Status Window, and some of the printer functions may not operate properly.

1 **From the [Start] menu, select [Control Panel].**

2 **Click [Network and Internet Connections], then click [Windows Firewall].**

3 **In the [Exceptions] sheet in the [Windows Firewall] dialog box, select the [File and Printer Sharing] check box, and then click [OK].**

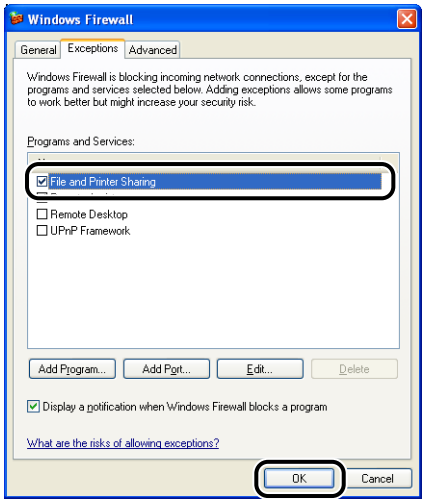

Windows Firewall is configured to unblock communication with the print server.

Index

Numerics

100 Indicator, 6-22

A

Add Printer Wizard
  Windows 2000, 3-36
  Windows 98/Me, 3-32
  Windows XP/Server 2003, 3-42
Administrators Permission, 3-23, 3-28, 3-36, 3-42
Advanced Settings, 4-36
Alarm Indicator, 1-7, 7-3

B

Binding Location, 4-32
Borders, 4-54
Brightness, 4-66

C

C (Cyan) Toner Cartridge Slot, 1-6
Calibration, 5-17
Canon CAPT Print Monitor, 8-13
Canon Printer Uninstaller, 3-49
CAPT (Canon Advanced Printing Technology), 3-4
Cassette Protective Cover, 1-5
Cleaning
  Fixing Roller, 5-22
  Outside of the Printer, 5-24
Client, 3-54, 3-62
[Color Adjustment] Sheet, 4-40
Color Mode, 4-38
Color Settings, 4-40
[Configuration] Sheet (Windows 98/Me), 4-43
Contrast, 4-66
Copies, 4-27
Custom Installation, 3-4
Custom Paper Size, 4-28
Custom Settings, 4-38

D

Deleting/Pausing/Resuming a Print Job, 4-17
Details, 4-33
[Device Settings] Sheet (Windows 2000/XP/Server 2003), 4-43
Dimensions, 8-5
Document Properties
  Windows 2000/XP/Server 2003, 4-12, 4-14, 4-26
  Windows 98/Me, 4-9, 4-25
Download Installation, 3-54, 3-62

E

Easy Installation, 3-4
Edit and Preview, 4-73
Edit Watermark, 4-29
Enable Image Correction, 4-61
Envelopes, 2-4
ERR Indicator, 6-22
ETB (Electro static Transfer Belt) Unit, 1-6
Expansion Slot, 1-5

F

Ferrite Core, 1-17
Finishing, 4-32, 4-57
Finishing Details, 4-34

[Finishing] Sheet, 4-32
Firewall, 8-15
Fixing Roller, 5-22
Foot Positions, 6-5
Format Settings, 4-31
Front Cover, 1-5

G

Get Device Status, 4-43
Gutter, 4-32, 4-34, 4-56

H

Heavy Paper, 2-3

I

Important Safety Instructions, xvi
Index Card, 2-4
Indicators, 1-4
Installation
  Manuals, 4-82
  Printer Driver, 3-4
Installation on Clients, 3-62
Installation Problems, 7-29

K

K (Black) Toner Cartridge Slot, 1-6

L

Labels, 2-4
LAN
  Cable, 1-16
  Connector, 6-21
Laser Beam, xx
Lift Handles, 1-4, 1-5
LNK Indicator, 6-22
Load Paper Indicator, 1-7
Loading Paper
  Custom Paper Size, 2-47
  Envelope, 2-37
  Heavy Paper, 2-14
  Index Card, 2-26
  Label, 2-14
  Plain Paper, 2-14
  Transparency, 2-14
Local Installation, 3-54
Local Printer, 3-33, 3-37, 3-43

M

M (Magenta) Toner Cartridge Slot, 1-6
MAC Address, 6-22
Manual Color Settings, 4-38, 4-64
Manual Feed Slot, 1-5, 2-12
Manual Scaling, 4-27
Manuals, 4-82
[Matching] Sheet, 4-41
Miscellaneous Problems, 7-39

N

NB-C1, 6-20
NetSpot Console, 8-14
NetSpot Device Installer, 8-12
Network Board, 6-3, 6-20
  Installation, 6-22
  Parts and Functions, 6-21
  Removal, 6-33
  Reset, 6-31
  Setting the DIP Switches, 6-26
Network Environment, 1-16, 3-54

O

Objective, 4-38
Online Help, 4-76
Online Manuals, 4-82
Optional Accessories, 6-2

Options
Network Board, 6-3
Paper Feeder, 6-2
Orientation, 4-27, 4-59
Output Size, 4-27
Output Tray
Output Tray, 1-4, 2-13
Paper Capacity, 2-13

P

Page Layout, 4-27
Page Options, 4-31
Page Order, 4-27
[Page Setup] Sheet, 4-27
Page Size, 4-27
PageComposer, 4-75
Paper
Printable Area, 2-6
Storage, 2-8
Storing Printouts, 2-8
Paper Alignment, 4-32
Paper Cassette, 1-4, 2-12
Paper Feeder, 6-2, 6-4
Installation, 6-14
Installation Space, 6-5
Removal, 6-18
Removing the Packing Materials, 6-6
Paper Guides, 1-5
Paper Jam Indicator, 1-7
Paper Jams, 7-4
Paper Selection, 4-36
Paper Size, 2-2
Abbreviations of Paper Sizes, 2-5
List, 2-2
Paper Source, 2-9
Paper Capacity, 2-10
Precautions for Handling, 2-12
Selection, 2-10
Type, 2-9
Paper Source Options, 4-43
[Paper Source] Sheet, 4-36
Paper Type, 4-37
Paper Type List, 2-3
Parts and Their Functions, 1-4
Peripheral Space Required, 6-5
Plain Paper, 2-3
Plug and Play
Windows 2000, 3-22
Windows 98/Me, 3-13
Windows XP/Server 2003, 3-27
Poster Printing, 4-51
Power Cord, 1-8
Power Socket, 1-5
Power Supply
Connecting the Power Cord, 1-8
Turning the Printer OFF, 1-11
Turning the Printer ON, 1-10
Power Switch, 1-5
Preview, 4-46
Print Color Sample, 4-38, 4-68
Print in Different Orientations, 4-32
Print Monitor Installer, 8-13
Print on the Other Side, 4-37
Print Server, 3-55
Print Server Settings, 3-55
Printer
Cleaning, 5-24
Handling, 5-35
Moving, 5-27
Parts and Their Functions, 1-4
Setting Printer Information, 4-3
Printer Connector, 6-21
Printer Driver
Installation, 3-4
Uninstallation, 3-75
Printer Name, 3-20, 3-35, 3-40, 3-46
Printer Properties
Windows 2000/XP/Server 2003, 4-15, 4-26
Windows 98/Me, 4-11, 4-25
Printer Sharing Settings
Windows 2000/XP/Server 2003, 3-57
Printer Status Window
Consumables/Counters Menu, 4-91
Device Settings Menu, 4-92
Display, 4-88
Displaying Printer Status When Using a Print Server, 4-93
Functions, 4-86
Preferences, 4-90
Refresh, 4-93

Resolve Error, 4-93
Utility Menu, 4-91
Printing, 2-26, 2-37, 2-47, 2-59, 4-5
Printing Date, 4-54
Printing Multiple Pages on One Sheet, 4-47
Printing Preferences, 4-9
Problems
Installation, 7-29
Network Board, 7-37
Others, 7-39
Paper, 7-26
Paper Jams, 7-4
Print Quality, 7-17
Service Call Display, 7-14
When Nothing is Printed, 7-28
[Profile] Sheet, 4-44
Profiles
Add/Edit, 4-45
Allow Profile Selection, 4-45
Allow Setting Edition, 4-45
Comment, 4-44
Define Document Property, 4-45
Delete, 4-44
Export, 4-45
Import, 4-44
Name, 4-44
Profile List, 4-44
Specifying Profiles, 4-69

Q

[Quality] Sheet, 4-37

R

Rating Label, 1-5
Ready Indicator, 1-7

S

Scaling, 4-49
Self-diagnostic Test, 1-10
Serial Number, 8-25
Service Call Display, 7-14
Settings, 4-38
Shared Printer, 3-54
Show Icon in the Taskbar, 4-43
Sleep Mode, 1-12
Specifications, 8-2
Hardware, 8-2
Software, 8-4
Spooling at Host, 4-43
System Requirements, 3-2

T

Toner Cartridges
Message, 5-2
Precautions for Handling, 5-14
Replacement, 5-2
Storage, 5-16
Toner Density, 4-62
Toner Indicator, 1-7
Transparencies, 2-3
Troubleshooting Map, 7-2

U

Uninstallation
Manuals, 4-84
Printer Driver, 3-75
Unusable Paper, 2-7
Usable Paper, 2-2
USB
Cable, 1-14
Class Driver, 3-10, 3-17
USB Connector, 1-5

V

Ventilation Slots (Exhaust Slots), 1-5

W

Watermark, 4-28, 4-52
When Nothing is Printed, 7-28
Windows Firewall, 8-15

Y

Y (Yellow) Toner Cartridge Slot, 1-6

Location of the Serial Number

The serial number is required for receiving maintenance service. The serial number for this printer is indicated at the location shown in the following figure.

IMPORTANT

The label on which the serial number is indicated is required for service or maintenance. Be sure not to remove them.

■ Inside of the Printer

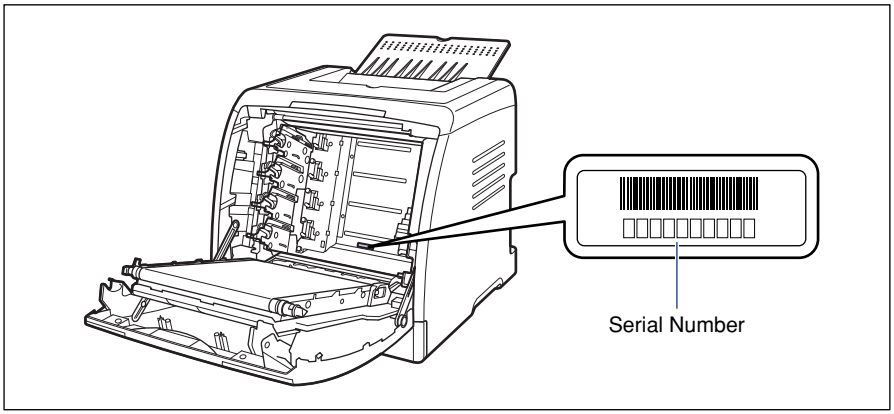

■ Outside View of the Packaging Box

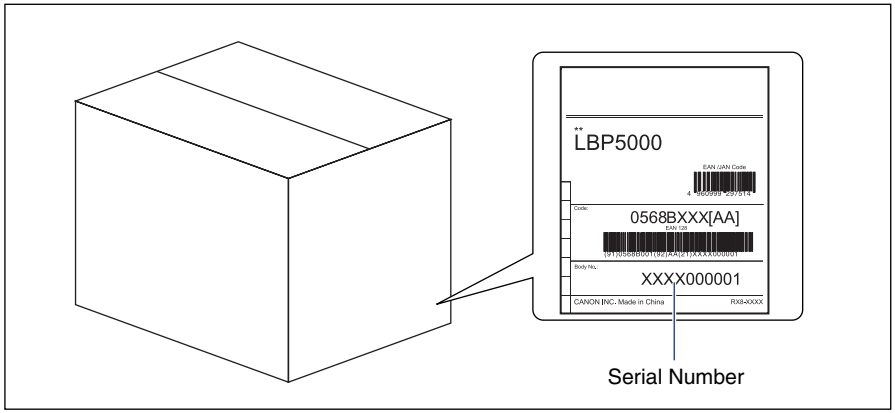

Canon

R-IE-695AA

© CANON INC. 2005