Canon

LASER SHOT

Laser Beam Printer

LASER SHOT
LBP5200

User's Guide

ENG

LBP5200
Laser Printer
User's Guide

Manuals for the Printer

The instruction manuals for this product are arranged as follows. Read the sections that are appropriate for your goals, to let you fully utilize this product.

Guides with this symbol are PDF manuals that are included on the accompanying CD-ROM.

- **Installation**
- **Connecting to a Computer**
- **Preparing to Print**

Getting Started Guide

- **Basic Operations**
- **Troubleshooting**

User's Guide (This Manual)

- To view the manual in PDF format, Adobe Reader/Adobe Acrobat Reader is required. If Adobe Reader/Adobe Acrobat Reader is not installed on your system, please download it from the Adobe Systems Incorporated website.
- The printer illustration on the cover may differ slightly from your printer.

How This Manual Is Organized

Chapter 1 Before You Start Using This Printer

Chapter 2 Loading and Collecting Paper

Chapter 3 Setting Up the Printing Environment

Chapter 4 Printing a Document

Chapter 5 Routine Maintenance

Chapter 6 Optional Accessories

Chapter 7 Troubleshooting

Chapter 8 Appendix

Considerable effort has been made to ensure that this manual is free of inaccuracies and omissions. However, as we are constantly improving our products, if you need an exact specification, please contact Canon.

Contents

Introduction . . . . . **viii**
How To Use This Manual . . . . . **viii**
Conventions viii
Notation for Keys and Buttons viii
Screen Shots ix
Abbreviations ix
Legal Notices . . . . . **x**
FCC (Federal Communications Commission) x
EMC Directive (220 - 240 V model) xi
Laser Safety (110 - 127 V/220 - 240 V models) xi
International Energy Star-Program xii
Trademarks. xii
Copyright xiii
Disclaimers. xiii
Legal Limitations on the Usage of Your Product and the Use of Images xiv
Important Safety Instructions . . . . . **xv**
Installation xv
Power Supply xvi
Handling xvii
Maintenance and Inspections xix
Consumables xx

Chapter 1 Before You Start Using This Printer

Features and Benefits **1-2**
Component Names and Functions. **1-4**
Front View. 1-4
Rear View 1-5
Inside the Printer 1-6
Indicator Lights and Toner Replacement Key 1-6
Connecting the Power Cord **1-8**
Connecting the Power Cord 1-8
Turning the Printer ON and OFF **1-11**
Turning the Printer ON 1-11
Turning the Printer OFF 1-12
Connecting to a Computer **1-13**
Using a USB Cable 1-13
Using a LAN Cable. 1-15

Chapter 2 Loading and Collecting Paper

Paper Requirements 2-2
Usable Paper 2-2
Paper Sizes 2-2
Paper Types 2-3
Printable Area 2-6
Paper You Cannot Use 2-7
Storing Blank Paper 2-8
Storing Printouts 2-8
Paper Sources 2-9
Paper Source Type 2-9
Paper Source Sheet Capacities 2-10
Paper Source Selection 2-10
Paper Output 2-12
Output Tray Type 2-12
Paper Output Tray Capacities 2-13
Output Tray Selection 2-14
Switching to the Sub-Output Tray 2-14
Switching to the Output Tray 2-14
Printing from the Multi-purpose Tray 2-15
Opening and Closing the Multi-Purpose Tray 2-16
Opening the Multi-Purpose Tray 2-16
Closing the Multi-Purpose Tray 2-17
Printing on Plain Paper, Heavy Paper or Transparencies 2-18
Printing Envelopes 2-26
Printing from the Paper Cassette 2-34
Loading Paper into the Paper Cassette 2-34
Changing the Paper Size of the Paper Cassette 2-40

Chapter 3 Setting Up the Printing Environment

Introduction 3-2
After Installing the Printer 3-2
Each Time You Print 3-2
System Requirements 3-3
Installing the CAPT Software 3-5
For Windows 98/Me 3-6
Installing from CD-ROM Setup 3-6
Installing with Plug and Play 3-10
Installing using the [Add Printer Wizard] 3-17
For Windows 2000 3-21
Installing from CD-ROM Setup 3-21
Installing with Plug and Play 3-26
Installing using the [Add Printer Wizard] 3-30

For Windows XP/Server 2003 3-37
Installing from CD-ROM Setup 3-37
Installing with Plug and Play 3-42
Installing using the [Add Printer Wizard] 3-45
After Completing Installation 3-53
Printing a Test Page 3-55
Printing from a Network Computer using a Shared Printer 3-58
Configuring the Print Server 3-60
For Windows 98/Me 3-60
For Windows 2000/XP/Server 2003 3-64
Installing the Client 3-70
Installing from CD-ROM Setup 3-71
Installing using the Add Printer Wizard 3-76
Installing using [Windows Explorer] 3-80
Uninstalling the CAPT Software 3-81

Chapter 4 Printing a Document

Setting Printer Information Before Printing 4-2
Printing from an Application 4-5
Specifying Printing Options 4-10
For Windows 98/Me 4-10
Opening the [Document Properties] Dialog Box from an Application 4-11
Opening the [Printer Properties] Dialog Box from the [Printers] Folder 4-13
For Windows 2000/XP/Server 2003 4-14
Opening the [Document Properties] Dialog Box from the Application 4-15
Opening the [Document Properties] Dialog Box from the [Printers and Faxes] Folder or [Printers] Folder 4-16
Opening the [Printer Properties] Dialog Box from the [Printers and Faxes] Folder or [Printers] Folder 4-18
Canceling a Print Job 4-20
Using the Printing Functions 4-21
Various Pages in the Printer Driver 4-21
[Page Setup] Sheet 4-23
[Finishing] Sheet 4-26
[Paper Source] Sheet 4-28
[Quality] Sheet 4-29
[General] Sheet 4-32
[Details] Sheet (Windows 98/Me only) 4-32
[Sharing] Sheet 4-33
[Ports] Sheet (Windows 2000/XP/Server 2003 only) 4-33
[Advanced] Sheet (Windows 2000/XP/Server 2003 only) 4-34

[Color Management] Sheet 4-34
[Security] Sheet (Windows 2000/XP/Server 2003 only) 4-35
[Configuration]/[Device Settings] Sheet 4-35
[Profile] Sheet (Windows 2000/XP/Server 2003 only) 4-36
Printing Multiple Pages on One Sheet 4-38
Scaling Printer Output 4-40
Scaling a Document Automatically 4-40
Scaling a Document Manually 4-41
Poster Printing 4-42
Watermark Printing 4-43
Watermark Printing 4-43
Editing Watermarks 4-45
Specifying Custom Paper (Non-Standard Paper) 4-47
Printing Borders and The Date 4-50
Gutters 4-52
Specifying the Finishing Method 4-53
Specifying the Paper Feed Method 4-55
Specifying the Print Quality 4-56
Color Settings 4-58
Selecting the Color Mode 4-58
Color Settings 4-59
Printing Color Samples (Windows 2000/XP/Server 2003 only) 4-61
Working with Profiles 4-64
Adding a Profile 4-64
Editing/Deleting a Profile 4-66
Editing Print Jobs with PageComposer 4-68
Viewing Printer Settings/Restoring the Default Settings 4-70
Viewing Printer Settings 4-70
Restoring the Default Settings 4-71
Printer Status Window 4-72
Using the Printer Status Window 4-72
Displaying the Printer Status Window 4-74
Setting Preferences 4-75
[Register Paper Size] Menu Item 4-77
[Consumables/Counters] Menu Item 4-78
[Refresh] Menu Item 4-78
[Utility] Menu Item 4-78
Displaying Printer Status When Using a Print Server 4-79

Chapter 5 Routine Maintenance

Replacing Toner Cartridges 5-2
When a Message Appears 5-2
The [Consumables/Counters] Dialog Box 5-4
Displaying the [Consumables/Counters] Dialog Box 5-4
Replacing Toner Cartridges 5-6

Precautions for Handling Toner Cartridges 5-13
Storing Toner Cartridges 5-15
Replacing the Drum Cartridge 5-17
When a Message Appears 5-17
The [Consumables/Counters] Dialog Box 5-18
Displaying the [Consumables/Counters] Dialog Box 5-18
Replacing the Drum Cartridge 5-20
Precautions for Handling the Drum Cartridge 5-27
Storing Drum Cartridges 5-29
Calibrating the Printer 5-30
Cleaning the Fixing Roller 5-33
Cleaning the Printer 5-37
Moving the Printer 5-39
Moving the Printer 5-40
When the 250-sheet paper feeder is installed 5-42
Handling the Printer 5-46
Precautions for Handling the Printer 5-46
Precautions for Storing the Printer 5-47

Chapter 6 Optional Accessories

Optional Accessories 6-2
250-sheet Paper Feeder 6-2
Network Board (AXIS 1611) 6-3
Installing the 250-sheet Paper Feeder 6-4
Installation Space 6-4
Verifying the Contents of the Package 6-5
Installing the 250-sheet Paper Feeder 6-5
Removing the 250-sheet Paper Feeder 6-10
Installing the Network Board (AXIS 1611) 6-12
Verifying the Contents of the Package 6-13
Parts and Their Functions 6-13
Installing the Network Board 6-14
Removing the Network Board 6-19

Chapter 7 Troubleshooting

Troubleshooting Map 7-2
Alarm Indicator 7-3
Paper Jams 7-4
Paper Jam Inside the Printer 7-6
Paper Jam Behind the Printer 7-13
Paper Jam in the Drum Cartridge 7-26
Service Call 7-28

Print Quality Problems **7-30**
Paper Problems **7-38**
When Nothing is Printed **7-40**
Installation Problems **7-41**
If Uninstallation Fails 7-42
Uninstalling the USB Class Driver 7-44
Problems During Local Installation 7-47
Problems sharing the printer 7-48
Miscellaneous Problems **7-49**

Chapter 8 Appendix

Specifications **8-2**
Hardware Specifications 8-2
Software Specifications 8-5
Dimensions of Each Part **8-6**
About Color Printing **8-7**
The Three Primary Colors of Light and Color 8-7
Method for Expressing Color 8-8
About Color Printing 8-9
Achieving More Beautiful Color Printing 8-10
NetSpot Device Installer **8-12**
NetSpot Console **8-13**
Windows Firewall **8-14**
Configuring Windows Firewall to unblock communication with client computers 8-14
Configuring Windows Firewall to block communication with client computers 8-16
Index **8-18**
Location of the Serial Number **8-23**

Introduction

Thank you for purchasing the Canon LBP5200. In order to fully understand the features of this product and thus be able to use it more effectively, please be sure to fully read this instruction manual before using the product. Store this manual in a safe place after reading it.

How To Use This Manual

Conventions

The following symbols are used in this manual to explain procedures, restrictions, handling precautions, and instructions that should be observed for safety.

WARNING	Indicates warnings that, if followed incorrectly, may lead to death or serious personal injury. To use the product safely, be sure to adhere to these warnings.
CAUTION	Indicates cautions that, if followed incorrectly, may lead to personal injuries or damage to property. To use the product safely, be sure to adhere to these cautions.
IMPORTANT	Indicates important points and limitations that need to be observed. Be sure to read these carefully to avoid running into problems operating the printer.
NOTE	Indicates additional information related to the operation of the printer. It is recommended that you read these points.

Notation for Keys and Buttons

In this manual, the following notation is used for key and button names.

- Buttons appearing on the computer screen: [Button Name]

  Examples: [OK]
  [Details]
- Control panel keys: <Key icon> + (Key Name)

  Example: (Toner Replacement)

Screen Shots

The screen shots shown in this manual may differ slightly from the screens on your computer depending on the operating system.

The locations of buttons that you need to press during a procedure are circled with a ⬭ as shown below.

When there is a choice of buttons that can be pressed during a procedure, all of the buttons are circled. Select the button that suits your needs.

4 **Click [Install].**

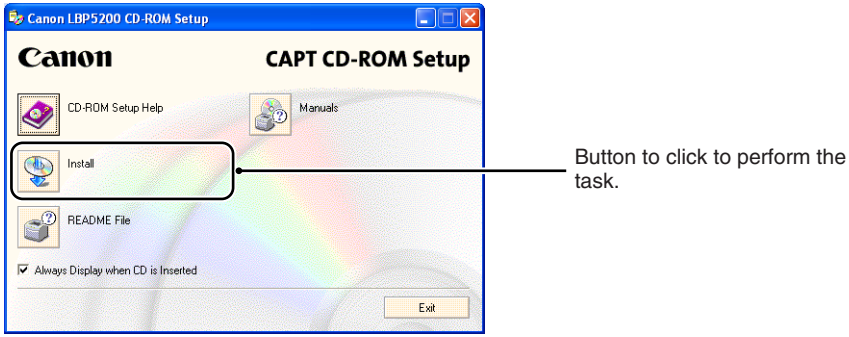

Abbreviations

In this manual, product names and model names are abbreviated as follows:

Microsoft® Windows® 95 operating system:	Windows 95
Microsoft® Windows® 98 operating system:	Windows 98
Microsoft® Windows® Millennium Edition operating system:	Windows Me
Microsoft® Windows® 2000 operating system:	Windows 2000
Microsoft® Windows® XP operating system:	Windows XP
Microsoft® Windows Server™ 2003 operating system:	Windows Server 2003
Microsoft® Windows® operating system:	Windows
LASER SHOT LBP5200:	LBP5200

Legal Notices

FCC (Federal Communications Commission)

Laser Beam Printer, Model L10981A

■ 110 - 127 V model

This device complies with part 15 of the FCC Rules. Operation is subject to the following two conditions: (1) This device may not cause harmful interference, and (2) this device must accept any interference received, including interference that may cause undesired operation.
This equipment has been tested and found to comply with the limits for a class B digital device, pursuant to Part 15 of the FCC rules. These limits are designed to provide reasonable protection against harmful interference in a residential installation. This equipment generates, uses and can radiate radio frequency energy and if not installed and used in accordance with the instructions, may cause harmful interference to radio communications. However, there is no guarantee that interference will not occur in a particular installation.

If this equipment does cause harmful interference to radio or television reception, which can be determined by turning the equipment off and on, the user is encouraged to try to correct the interference by one or more of the following measures:

- Reorient or relocate the receiving antenna.
- Increase the separation between the equipment and receiver.
- Connect the equipment into an outlet on a circuit different from that to which the receiver is connected.
- Consult the dealer or an experienced radio/TV technician for help.

Use of shielded cable is required to comply with class B limits in Subpart B of Part 15 of FCC Rules.

Do not make any changes or modifications to the equipment unless otherwise specified in the manual. If such changes or modifications should be made, you could be required to stop operation of the equipment.

Canon U.S.A. Inc.
One Canon Plaza, Lake Success, NY 11042, U.S.A.
Tel No. (516) 328-5600

EMC Directive (220 - 240 V model)

"This equipment has been tested in a typical system to comply with the technical requirements of EMC Directive."

- Use of shielded cable is necessary to comply with the technical requirements of EMC Directive.

The product is in conformity with the EMC directive at nominal mains input 220 - 240 V, 50 Hz although the rated input of the product is 220 - 240 V, 50/60 Hz.

C-tick marking on the rating label means that we declare the product is in conformity with the relevant requirements at nominal mains input 240 V, 50 Hz although the rated input of the product is 220 - 240 V, 50/60 Hz.

Laser Safety (110 - 127 V/220 - 240 V models)

Laser radiation could be hazardous to the human body. For this reason, laser radiation emitted inside this printer is hermetically sealed within the protective housing and external cover. No radiation can leak from the printer in the normal operation of the product by the user.

This printer is classified as a Class 1 laser product under IEC60825-1:1993, EN60825-1:1994, and as for the U.S.A., it is classified as Class 1 under the Code of Federal Regulations, 1040.10 of Title 21.

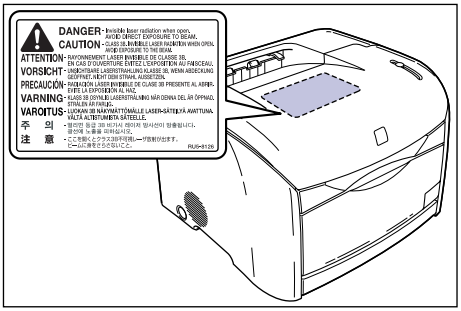

This printer has been classified under IEC60825-1:1993, EN60825-1:1994 and conforms to the following classes:

CLASS 1 LASER PRODUCT
LASER KLASSE 1
APPAREIL A RAYONNEMENT LASER DE CLASSE 1
APPARECCHIO LASER DI CLASSE 1
PRODUCTO LASER DE CLASE 1
APARELHO A LASER DE CLASSE 1
(220 - 240 V model only)

CAUTION

Performance of procedures other than those specified in this guide may result in hazardous radiation exposure.

International Energy Star-Program

As an ENERGY STAR Partner, Canon Inc. has determined that this product meets the ENERGY STAR Program for energy efficiency.

The International ENERGY STAR Office Equipment Program is an international program that promotes energy saving through the use of computers and other office equipment.

The program backs the development and dissemination of products with functions that effectively reduce energy consumption. It is an open system in which business proprietors can participate voluntarily.

The targeted products are office equipment, such as computers, displays, printers, facsimiles, and copiers. The standards and logos are uniform among participating nations.

Trademarks

Canon, the Canon Logo, LASER SHOT, LBP, and NetSpot are trademarks of Canon Inc.

Adobe® Acrobat is a trademark of Adobe Systems Incorporated.

Microsoft and Windows are trademarks of Microsoft Corporation in the U.S. and other countries.

Other product and company names herein may be the trademarks of their respective owners.

Copyright

Copyright 2005 by Canon Inc. All rights reserved.

No part of this publication may be reproduced or transmitted in any form or by any means, electronic or mechanical, including photocopying and recording, or by any information storage or retrieval system without the prior written permission of Canon Inc.

Disclaimers

The information in this manual is subject to change without notice.

CANON INC. MAKES NO WARRANTY OF ANY KIND WITH REGARD TO THIS MATERIAL, EITHER EXPRESS OR IMPLIED, EXCEPT AS PROVIDED HEREIN, INCLUDING WITHOUT LIMITATION, THEREOF, WARRANTIES AS TO MARKETABILITY, MERCHANTABILITY, FITNESS FOR A PARTICULAR PURPOSE OF USE OR AGAINST INFRINGEMENT OF ANY PATENT. CANON INC. SHALL NOT BE LIABLE FOR ANY DIRECT, INCIDENTAL, OR CONSEQUENTIAL DAMAGES OF ANY NATURE, OR LOSSES OR EXPENSES RESULTING FROM THE USE OF THIS MATERIAL.

Legal Limitations on the Usage of Your Product and the Use of Images

Using your product to scan, print or otherwise reproduce certain documents, and the use of such images as scanned, printed or otherwise reproduced by your product, may be prohibited by law and may result in criminal and/or civil liability. A non-exhaustive list of these documents is set forth below. This list is intended to be a guide only. If you are uncertain about the legality of using your product to scan, print or otherwise reproduce any particular document, and/or of the use of the images scanned, printed or otherwise reproduced, you should consult in advance with your legal advisor for guidance.

- Paper Money
- Money Orders
- Certificates of Deposit
- Postage Stamps (canceled or uncanceled)
- Identifying Badges or Insignias
- Selective Service or Draft Papers
- Checks or Drafts Issued by Governmental Agencies
- Motor Vehicle Licenses and Certificates of Title
- Travelers Checks
- Food Stamps
- Passports
- Immigration Papers
- Internal Revenue Stamps (canceled or uncanceled)
- Bonds or Other Certificates of Indebtedness
- Stock Certificates
- Copyrighted Works/Works of Art without Permission of Copyright Owner

Important Safety Instructions

Before using this product, make sure you read this section (Important Safety Instructions) thoroughly, and that you use the product correctly. The purpose of the warnings and cautions contained in this section is to prevent injuries to the user and other people, and to prevent damage to property. Make sure you adhere to these warnings and cautions. Do not perform any actions that are not explicitly written in this manual.

Installation

WARNING

- **Do not install the printer in a location near alcohol, thinners, or other flammable substances. If a flammable substance comes into contact with the electrical unit inside the printer it may ignite or cause an electrical shock.**
- **Do not put any of the following types of objects on top of this printer. If any of these items come into contact with the electrical unit inside the printer it may ignite or cause an electrical shock.**
  If any of these objects fall into the printer, turn the printer off immediately ①, and disconnect the USB cable if it is connected ②. After this, pull out the power plug ③, and contact the store where you purchased this printer.
  - Necklaces, jewellery and other metal objects
  - Cups, vases, flowerpots, and other containers filled with water or liquids

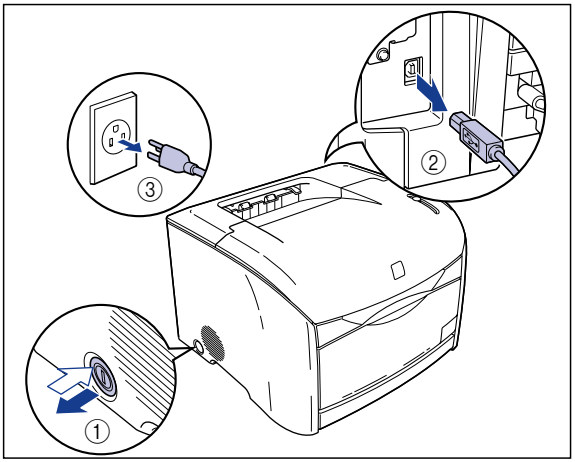

CAUTION

- Do not install the printer on an unsteady platform, an uneven surface, or any other unstable location, or any location subject to vibrations. If the printer falls down or the platform tips over, someone may be injured.
- Do not install this printer in a location where a wall or other object will block the ventilation slots in the printer. Do not install the printer on a bed, sofa, thick carpet, etc. If the ventilations slots are blocked, the internal printer components will overheat, and this may cause a fire.
- Do not install the printer in any of the following locations. Doing so may cause fire or electrical shock.
  - A damp or dusty location
  - A location exposed to smoke and steam, such as next to a stove or humidifier
  - A location exposed to rain or snow
  - A location near water faucets or water
  - A location exposed to direct sunlight
  - A location subject to high temperatures
  - A location near open flames
- When you are installing the printer, work slowly and carefully to avoid pinching your hands between the printer and the floor, or between the printer and another product. You may be injured if your hands, etc. are pinched by the printer.
- When connecting the interface cables, connect the cables correctly by following the directions in this manual. Failure to properly connect cables can damage the printer or cause electrical shocks.
- When you are carrying the printer, hold the printer correctly by following the directions in this manual. Dropping the product may lead to personal injuries. (See "Moving the Printer," on p. 5-39.)

Power Supply

WARNING

- Do not scratch, damage or modify the power cord. Do not place heavy items on the cord, pull on the cord, or bend the cord excessively. Electrical current may flow out from damaged parts of the cord, causing fire or electrical shock.
- Do not place the cord near any heating appliance. Doing so may melt the cord insulation, causing fires or electrical shock.
- Do not plug in or unplug the electrical cord if your hands are wet. Doing so may cause an electrical shock.
- Do not connect more than one appliance to a single power outlet. Doing so may cause fire or electrical shock.
- Do not coil or tie knots in the electrical cord. Doing so may cause fire or electrical shock.
- Make sure the plug is fully inserted into the power outlet. If the plug is not fully inserted, fires and electrical shock can result.

- Do not use any electrical cables other than the supplied cord. Doing so may cause fire or electrical shock.
- As a general rule, do not connect the printer using an extension cord or connect more than one appliance to a single power outlet. However, if there is no choice but to use an extension cord or connect multiple appliances to a single power outlet, it is the responsibility of the user to observe the following precautions. If these points are not followed correctly, a fire or electrical shock may result.
  - Do not connect one extension cord to another.
  - Make sure that the voltage rating of the power plug for the product you are using is the same as the voltage printed on the rating label (Detailed on the rear surface of the product).
  - Use an extension cord that can carry an electrical current sufficiently larger than the electrical current requirements shown on the rating label of the printer (Detailed on the rear surface of the product).
  - When you use an extension cord, uncoil the cord and insert the power plug completely into the extension cord outlet to ensure a firm connection between the power cord and the extension cord.
  - Periodically check that the extension cord is not overly warm.

CAUTION

- Do not use a power source with a voltage other than that indicated. Doing so may cause fire or electrical shock.
- When you unplug the power cord, make sure you hold the cord by the plug. If you pull on the cord itself, the cord may experience damage such as exposure of the core wires or an open circuit, and electrical current leaking out of the damaged section can cause fires or electrical shock.
- Whenever you pull out the power plug, make sure there are no objects around the power plug. Do not pull out the power plug in an emergency.

Handling

WARNING

- Do not disassemble or modify this product. This product contains high voltage and high temperature internal parts, which could cause a fire or electrical shock if tampered with.
- Electrical components can produce unexpected hazards if not handled correctly. Make sure that the power cord, cables, and internal gears and electrical components are kept out of reach of children.
- If this product emits strange noises, smoke, excess heat, or unusual smells, turn the power off immediately, and disconnect the USB cable if it is connected. Next, pull out the power plug, and contact the store where you purchased this printer. Continuing to use a faulty printer may cause fire or electrical shock.
- Do not use flammable sprays near this product. If the gas from the spray comes into contact with the electrical unit inside the printer it may ignite or cause an electrical shock.

- **When you are moving the printer, always turn the printer off, unplug the power plug, and remove the interface cable. If you move the printer without unplugging the cables, the electrical cord and interface cable may be damaged, causing a fire or electrical shock.**
- **Do not drop paper clips, staples, or any other metallic objects into the printer. Do not spill water, liquids, or flammable substances (alcohol, benzene, thinners, etc.) onto the printer. If any of these items come into contact with the electrical unit inside the printer they may ignite or cause an electrical shock. If any of these objects fall into the printer, turn the printer off immediately, and disconnect the USB cable if it is connected. After this, pull out the power plug, and contact the store where you purchased this printer.**
- **If you are connecting or disconnecting the USB cable while the printer power plug is connected to a power outlet, make sure that you do not touch the metal parts of the connector. Doing so may cause an electrical shock.**

⚠ CAUTION

- **Do not put any heavy objects on top of this product. If a heavy object topples over or falls it can cause personal injuries.**
- **Take care when you are handling expansion boards. Do not touch the corners or sharp areas of an expansion board as this may cause personal injury.**
- **If you will not use the printer for a long period of time, such as at night time, turn the printer off for safety reasons. Furthermore, if you will not use the printer for a longer period of time, such as a weekend, turn the printer off and unplug the power plug for safety.**
- **Laser light can be harmful to the human body. In products that are designed for laser light, the laser scanning unit is sealed behind a cover, and there is virtually no risk of being exposed to the laser light if the product is operated normally. Be sure to observe the following safety precautions.**
  - **Never open any of the covers unless directed to by this manual.**
  - **Do not remove the caution label attached to the cover of the laser scanner unit.**

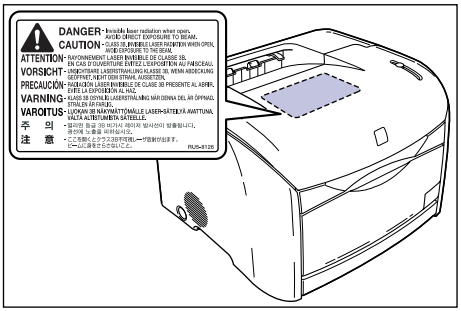

- **If the laser beam escapes from the printer, exposure may cause serious damage to your eyes.**
- **The LBP5200 has been verified as a Class 1 laser product in compliance with IEC60825-1:1993.**

Maintenance and Inspections

WARNING

- **Turn the printer off, disconnect the USB cable and remove the power plug from the wall when you are cleaning the printer. Failure to do so may cause fire or electrical shock.**
- **When cleaning the printing, always use a cloth dipped in plain water or water containing a mild soap solution and firmly wring the excess moisture out of the cloth before use. Do not use alcohol, benzene, thinners or any other inflammable substance. If an inflammable substance comes into contact with the electrical unit inside the printer it may ignite or cause an electrical shock.**
- **There is a high-voltage unit inside this product. When you are clearing paper jams or inspecting the interior of the printer, make sure that a necklace, bracelet, or other metallic object does not touch the inside of the printer. Doing so may cause burns or an electrical shock.**
- **Do not put spent drum cartridges or spent toner cartridges into a fire. Any toner remaining in the drum or toner cartridges may ignite, causing burns or fire.**
- **Unplug the power plug periodically and wipe away any dust or dirt that has built up around the power outlet. If the power plug is left connected for a long period of time in a dusty, humid, or smoky environment, dust that gathers around the power outlet will absorb moisture and reduce the effectiveness of the insulation, leading to fires.**

CAUTION

- **Never attempt to service this printer yourself, except as explained in this manual. There are no user serviceable parts inside the printer. Adjust only those controls that are covered in the operating instructions. Improper adjustment could result in personal injury and/or damage requiring extensive repair that may not be covered under your Limited Warranty.**
- **The area around the fuser unit inside the printer becomes hot during use. If you are inspecting the inside of the printer while you are clearing a paper jam, etc. take care not to touch the area around the fuser unit. Doing so can cause burns.**

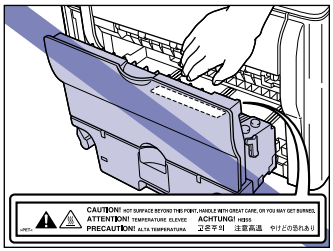

- **Be careful to avoid staining your clothes or hands with toner while you are clearing a paper jam, replacing the drum cartridge or replacing a toner cartridge. If you do get any toner on your clothes or hands, wash it off immediately with cold water. If you rinse using hot water the toner may become fixed, creating a stain that cannot be removed.**

- When you are clearing jammed paper from inside the printer, remove the paper gently so that toner that is on the jammed paper does not spray out of the printer. This could lead to toner getting in your eyes or mouth. If toner gets into your eyes or mouth, wash it out immediately with cold water and consult a doctor.
- When loading paper or removing jammed paper, take care not to cut your hands with the edges of the paper.
- When removing used toner cartridges from the toner cartridge slot, remove the cartridge carefully to prevent the toner from scattering and entering your eyes or mouth. If the toner enters your eyes or mouth, wash them immediately with cold water and immediately consult a physician.

Consumables

WARNING

- Do not put spent toner cartridges into a fire. The toner may ignite cause burns and fires.
- Do not store toner cartridges or paper in a location where there are open flames. Toner and paper could ignite, causing burns and fires.

CAUTION

Store toner cartridges and other consumables out of reach of infants. If toner from a toner cartridge is swallowed, seek medical attention immediately.

Before You Start Using This Printer

1

CHAPTER

This chapter describes the major features and basic functions of this printer.

Features and Benefits 1-2

Component Names and Functions 1-4

Front View 1-4

Rear View 1-5

Inside the Printer 1-6

Indicator Lights and Toner Replacement Key 1-6

Connecting the Power Cord 1-8

Connecting the Power Cord 1-8

Turning the Printer ON and OFF 1-11

Turning the Printer ON 1-11

Turning the Printer OFF 1-12

Connecting to a Computer 1-13

Using a USB Cable 1-13

Using a LAN Cable 1-15

Features and Benefits

■ High Definition Full Color Printing

This printer is fitted with a 600 dpi full color laser printer engine. Through additional gradation control, this delivers 9600 dpi equivalent x 600 dpi high quality printing. Furthermore, calibration processing provides consistently stable images.

■ High Performance Printing System "CAPT"

Canon's latest high performance printing system for the Windows operating system, CAPT (Canon Advanced Printing Technology), has been built into a color printer for the first time. This system allows the data processing that was previously handled by the printer during printing to be batch processed by the computer, delivering high-speed printing that utilizes the full power of the computer. In addition, this means that even heavy data can be processed without the need for expansion memory in the printer.

■ Compact Design

Although LBP5200 is a color printer, it is compact enough to fit on a desktop.

■ USB 2.0 High Speed Installed as Standard

The LBP5200 delivers high-speed transmission by supporting a high-speed USB 2.0 interface that offers up to 480 Mbps transmission speeds.

■ Easy Maintenance

While the "intermediate transfer unit", "light sensitive drum" and "waste toner box" consumable parts are typically separated in a normal printer, in the LBP5200, these have been integrated into a single drum cartridge (Canon Genuine Parts), which reduces the number of points at which consumable parts need to be replaced.
In addition, replacement of the toner cartridges (Canon Genuine Parts) and other principle consumables can be done through the front panel, providing complete operation from the front of the printer.

■ Low Power Consumption and Quick Startup

The use of On-Demand Fixing Technology delivers low power consumption and quick startup. This unique Canon technology means that the fixing heater is only turned on momentarily during printing, and no time is needed to warm up the printer. As a result, you can always start printing directly from standby mode without any delay. This energy saving design also means that the fuser unit uses virtually no power while the printer is in standby mode.

■ Support for Various Types of Media

The LBP5200 is capable of printing various types of media including plain paper, heavy paper, envelopes, index card and transparency (black and white printing only).

■ Network-Capable Printer

The LBP5200 can be used as an Ethernet network printer by installing the optional network board.

■ User-Friendly Color Control

The user interface with thumbnails delivers intuitive and easy to use color tone adjustment.

Component Names and Functions

This section describes the names and functions of each part of the printer so that you can use the printer properly and make full use of all the printer features.

CAUTION

Because this printer has ventilation slots (inlet and exhaust slots), make sure that the printer is setup so that the ventilation slots are not blocked by a wall or other object. If the ventilation slots (inlet or exhaust slots) are blocked, the printer will heat up internally, and this may cause a fire.

Front View

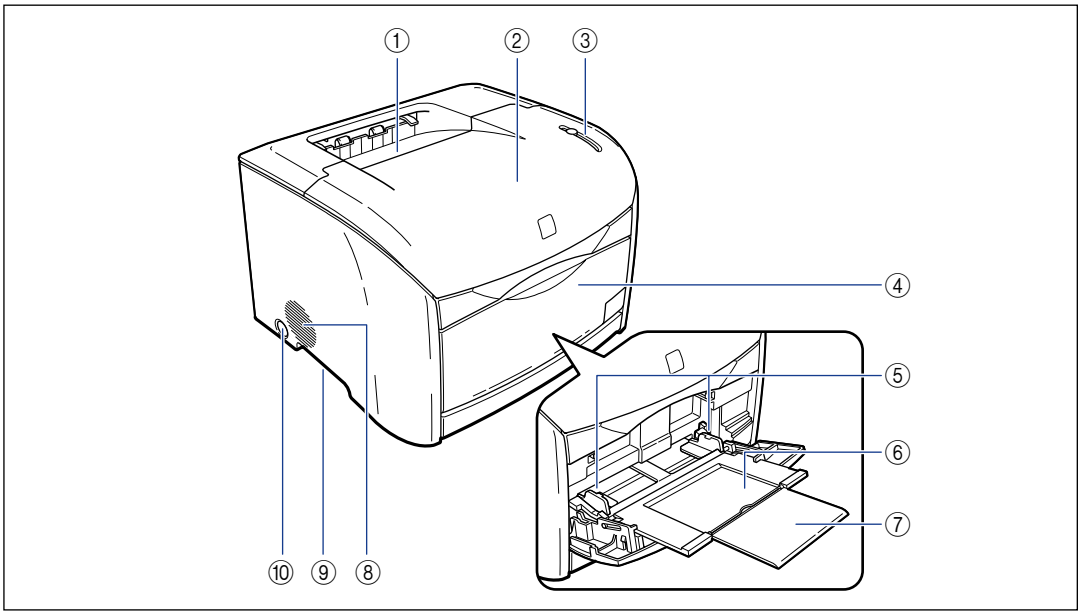

① Output Tray

Collects output paper with the printed side facing down. (See p. 2-12)

② Top Cover

This cover needs to be opened to replace toner cartridges or the drum cartridge, or to clear paper jams. (See p. 5-2, p. 5-17)

③ Indicator Lights and Toner Replacement Key

The indicator lights show the printer status, and the button is used when replacing a toner cartridge. (See p. 1-6)

④ Multi-purpose Tray

To feed paper to the printer from the multi-purpose tray, open this panel and load the tray with paper. (See p. 2-16)

⑤ Paper Guides

The positions of the guides can be adjusted to match the width of paper loaded in the multi-purpose tray. The tray is also fitted with paper limit guides, and paper can be loaded up to the bottom of these guides. (See p. 2-18)

⑥ Auxiliary Tray

This tray should be extended when paper is loaded in the multi-purpose tray. Make sure you extend this tray before loading paper in the multi-purpose tray.

⑦ Extension Tray

Open the extension tray when loading longer paper sizes, such as A4 paper, to prevent the paper from hanging out of the tray.

⑧ Ventilation Slots (Air Intake)

These slots draw air into the printer to cool the internal components.

⑨ Grips for Moving

When you are carrying the printer, put your hands in these grips and grasp the printer firmly. (See p. 5-39)

⑩ Power Switch

This switch turns the printer ON and OFF.

Rear View

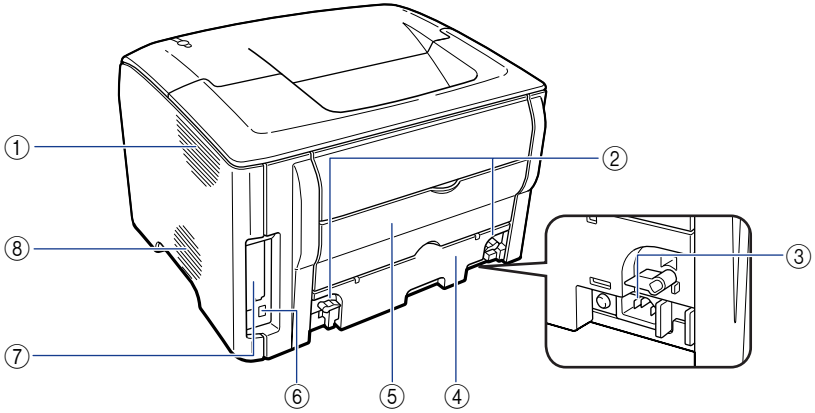

① Ventilation Slots (Exhaust)

The exhaust slots are used to cool the internal printer components.

② Lock Release Levers

Turn these levers to remove the fuser unit when you are replacing the fuser unit or clearing paper jams from the fuser unit. (See p. 7-22)

③ Power Socket

Connect the supplied power cord to this socket.

④ Fuser Unit

This unit fixes the toner to the paper.

⑤ Sub-Output Tray

Collects output paper with the printed side facing up. (See p. 2-12)

⑥ USB Socket

The USB cable plugs into this socket. This is used to connect the printer to the USB port on a computer, etc. (See p. 1-13)

⑦ Expansion Slot

This expansion slot is used for installing the optional internal network board. (See p. 6-12)

⑧ Ventilation Slots (Exhaust)

The exhaust slots are used to cool the internal printer components.

Inside the Printer

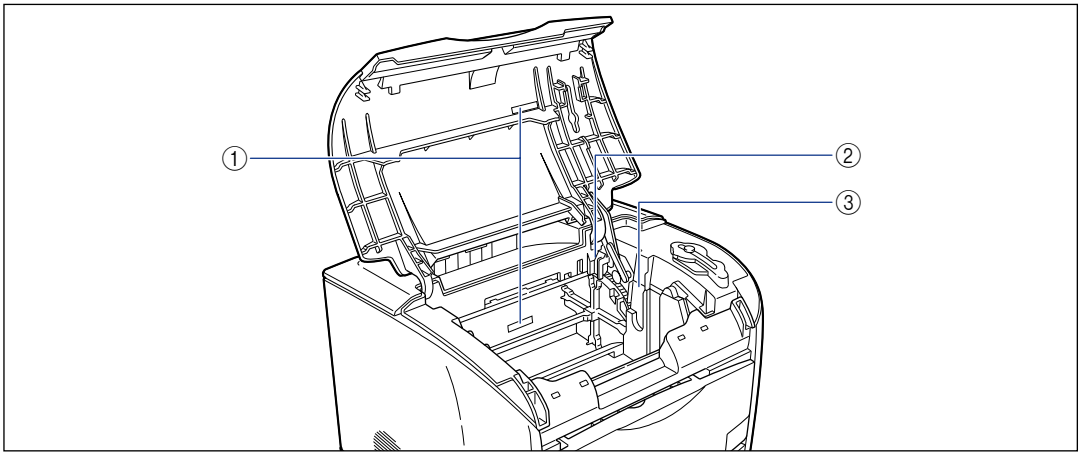

① Serial Number Label

The serial number used for printer identification is written on this label. This is needed when servicing or repairing the printer. Do not remove this label.

② Toner Cartridge Slots

This slot is used for loading toner cartridges.

③ Drum Cartridge Slot

This slot is used for loading the drum cartridge.

Indicator Lights and Toner Replacement Key

NOTE

Detailed printer status information can also be checked from the Printer Status Window on the computer you are using. For details on the Printer Status Window, refer to "Printer Status Window," on p. 4-72.

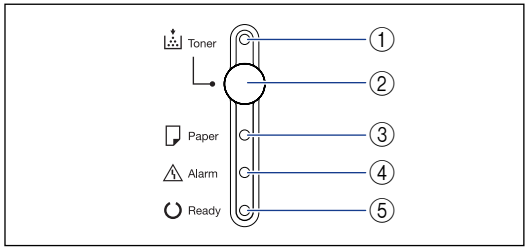

① Toner Lamp (Red)

On: The printer is in "Toner Cartridge Replacement Mode". (See p. 5-6)
Flashing: One or more of the toner cartridges need to be replaced. The toner cartridges are not installed correctly. (See p. 5-2)

② Toner Replacement Key

This button is used when replacing toner cartridges. To replace the toner cartridges on this printer, the printer needs to be in "Toner Cartridge Replacement Mode". Hold down the Toner Replacement Key for two seconds to enter or leave "Toner Cartridge Replacement Mode". The toner lamp comes on when the printer enters "Toner Cartridge Replacement Mode".

③ Paper Lamp (Red)

Blinking: The printer is out of paper or the size of the paper loaded in the printer is incorrect.

④ Alarm Lamp (Red)

On: A serious error has occurred and the printer needs to be serviced.
Blinking: An error has occurred that has stopped the printer from printing, but the printer does not require servicing.

⑤ Ready Lamp (Blue)

On: The printer is ready to print.
Blinking: The printer is busy performing some kind of processing or operation, such as printing, warming up, or calibrating.

Connecting the Power Cord

This section explains how to connect the power cord to the printer. Refer to "Important Safety Instructions," on p. xv before connecting the printer.

Connecting the Power Cord

WARNING

- **Do not scratch, break or work on the power cord. Do not place heavy items on the cord, pull on the cord, or bend the cord excessively. Electrical current may flow out from damaged parts of the cord, causing fire or electrical shock.**
- **Do not place the cord near any heating appliance. This can melt the cord insulation, causing fires or electrical shock.**
- **Do not plug in or unplug the electrical cord if your hands are wet. Doing so may cause electrical shock.**
- **Do not connect an excessive number of appliances to a single outlet. Doing so may cause fire or electrical shock.**
- **Do not coil or tie knots in the electrical cord. Doing so may cause fire or electrical shock.**
- **Make sure the plug is fully inserted into the power outlet. If the plug is not fully inserted, fires and electrical shock can result.**
- **Do not use any electrical cables other than the supplied cord. Doing so may cause fire or electrical shock.**
- **In principle, you should not connect the printer using an extension cord or connect too many appliances to a single power outlet. However, if there is no choice but to use an extension cord or connect multiple appliances to a single power outlet, it is the responsibility of the user to take care of the following cautions. If these points are not followed correctly, as fire or electrical shock may result.**
  - **Do not connect one extension cord to another.**
  - **Make sure that the voltage rating of the power plug for the product you are using is the same as the voltage printed on the rating label (Detailed on the rear surface of the product).**
  - **Use an extension cord that can carry an electrical current sufficiently larger than the electrical current requirements shown on the rating label of the printer (Detailed on the rear surface of the product).**
  - **When you use an extension cord, untie the cord binding, and insert the power plug completely into the extension cord outlet to ensure a firm connection between the power cord and the extension cord.**
  - **Periodically check that the extension cord is not overly warm.**

CAUTION

- **Do not use a power source with a voltage other than that indicated. Doing so may cause fire or electrical shock.**
- **When you unplug the power cord, make sure you hold the cord by the plug. If you pull on the cord itself, the cord may experience damage such as exposure of the core wires or an open circuit, and electrical current flowing out of the damaged section can cause fires or electrical shock.**
- **Whenever you pull out the power plug, make sure there are no objects around the power plug. Do not pull out the power plug in an emergency.**

IMPORTANT

- Do not plug the power cord into the auxiliary power outlet of a computer.
- One AC power outlet should be used exclusively for the printer.
- Do not connect this printer to an uninterruptible power supply. The printer may malfunction when a power outage occurs, and there is a risk of damaging the printer.

1 Make sure that the power switch of the printer is turned OFF.

The printer is off when the switch is flush with the surface of the printer.

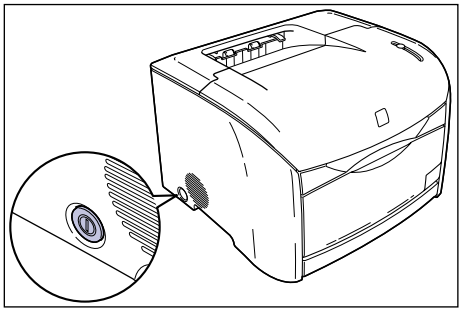

2 Plug the supplied power cord securely into the power socket on the printer.

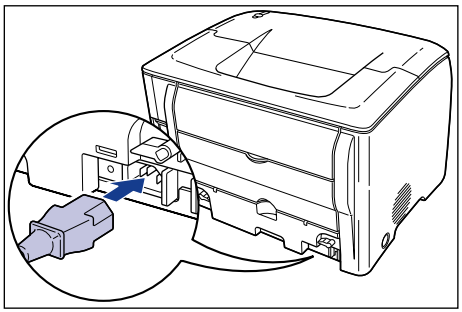

3 Plug the power plug into the AC power outlet.

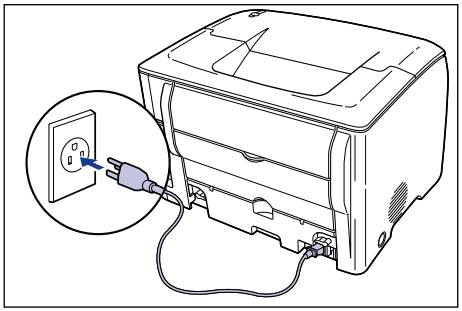

Turning the Printer ON and OFF

The printer can be turned on and off using the power switch on the left side of the printer body. To avoid running into unexpected problems, be sure to correctly memorize the procedure.

Turning the Printer ON

To begin using the printer, press the power switch to turn the printer on. After running a check on the state of the main unit and optional accessories (self-diagnostic test), the printer is ready to print.

IMPORTANT

- Do not turn the printer on again immediately after turning the printer off. If you want to turn the printer on again after turning it off, wait at least 3 seconds after turning the printer off before turning it on again.
- Refer to "Troubleshooting," on p. 7-1 if the printer does not operate properly, or an error message appears in the Printer Status Window.

1 Press the power switch.

The printer is on when the power switch is depressed.

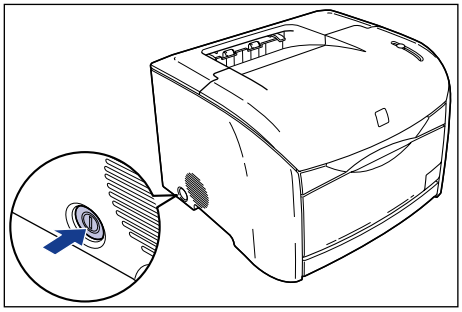

The indicator lights on the printer turn on and the printer initiates a self-diagnostic test of the main unit and optional accessories.
If no abnormalities are found during the self-diagnostic test, the Ready lamp (blue) lights up, and the printer is ready to print.

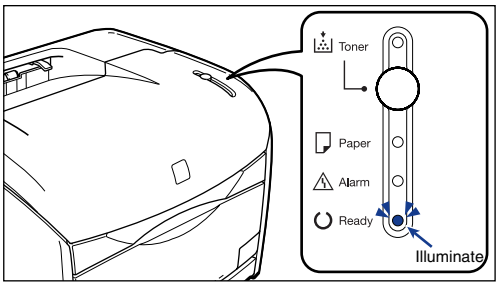

Turning the Printer OFF

Use the following procedure to turn the printer off.

IMPORTANT

- If the printer is used on a network, make sure that it is not printing data from another computer before turning the power off.
- When the printer is turned off, any remaining print data in the printer's memory is erased. If you need the print data, wait for the printer to finish printing before turning the power off.
- Do not turn the power off under any of the following conditions:
  - The printer is in the middle of printing.
  - The printer is in the middle of the self-diagnostic test that runs immediately after the power is turned on.

1 Press the power switch.

The printer is off when the switch is flush with the surface of the printer.

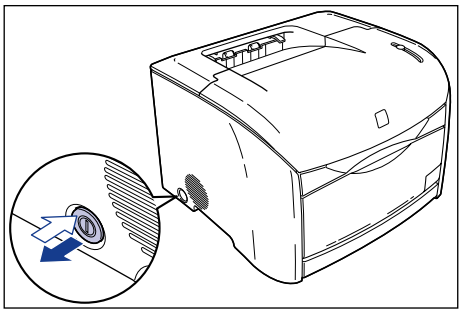

IMPORTANT

When the power switch is not pressed in, the power consumption is 0 W.

Connecting to a Computer

This section explains how to connect the printer to a computer.

This printer is fitted with a USB connector as standard, and can be connected to a computer using a USB cable. If the optional network board is installed, the printer can also be connected directly to a network using a LAN cable.

Using a USB Cable

Connect the printer to a computer equipped with a USB port using a USB cable.

WARNING

If you are connecting or disconnecting the USB cable while the printer power plug is connected to a power outlet, make sure that you do not touch the metal parts of the connector. Doing so may cause an electrical shock.

IMPORTANT

- The USB cable can be connected and disconnected even if the computer or printer are turned on. However, do not connect or disconnect the USB cable under the following circumstances. Doing so may cause invalid operations on the computer or printer.
  - While the computer operating system is starting up immediately after the computer is turned ON
  - The printer is in the middle of printing
- If you are connecting or disconnecting the USB cable while the computer and printer are turned on, make sure you wait at least 5 seconds after unplugging the cable before reconnecting. Reconnecting the cable immediately after disconnecting it may cause the computer or printer to become inoperable.
- This printer use bidirectional communication. Operation of the printer when connected via unidirectional communication equipment has not been tested, and as a result, Canon cannot guarantee printer operation when the printer is connected using unidirectional print servers, USB hubs and switching devices.

NOTE

- The USB interface of the printer depends on the OS of the computer it is connected to as follows. For further details, please inquire at the store where you purchased the printer.
  - Windows 98/Me: USB Full-Speed (USB1.1 equivalent)
  - Windows 2000/XP/Server 2003: USB 2.0 Hi-Speed/USB Full-Speed (USB1.1 equivalent)
- When connecting this printer to a computer via a USB cable, make sure you use a computer where the manufacturer has guaranteed operation of the USB port.

- A USB cable is not supplied with this printer. Obtain a USB cable that matches the computer you are using.

1 Plug the B-type (square) end of the USB cable into the USB socket on the rear side of the printer.

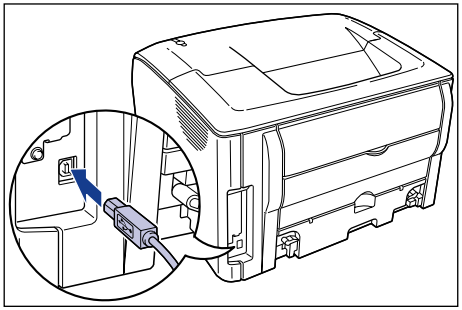

2 Plug the A-type (flat) end of the USB cable into the USB port on the computer.

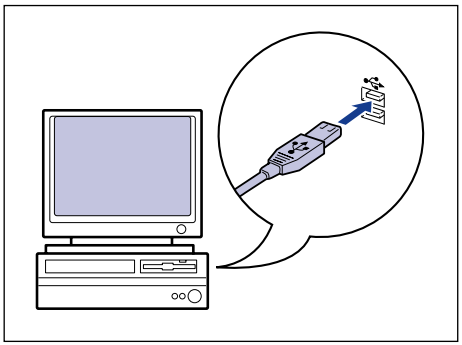

NOTE

- If the Plug and Play automatic setup feature of the computer displays a Wizard after you connect the USB cable, install the printer software using one of the following procedures. Refer to "Installing the CAPT Software," on p. 3-5 for more details.
  - Click [Cancel] and install the software from CD-ROM Setup.
  - Install the software using Plug and Play.
- If you are not sure about the USB cable that is supported by your computer, contact the store where you purchased the computer.

Using a LAN Cable

When the optional network board (AXIS 1611) is installed, the printer can be connected to a network using a LAN cable. The cables, hubs, etc. should be obtained separately as required.

NOTE

- For details on the procedure for installing the network board, see "Installing the Network Board (AXIS 1611)," on p. 6-12.
- If this printer is connected to a network, network settings will need to be configured, the printer will need to be installed as a network printer, the print server will need to be configured, etc. For information on the steps required, refer to the users manual included with your network operating system and the users manual included with AXIS 1611.

■ Network Environment

The optional network board supports 10BASE-T and 100BASE-TX connections.

- When connecting to a 10BASE-T Ethernet network

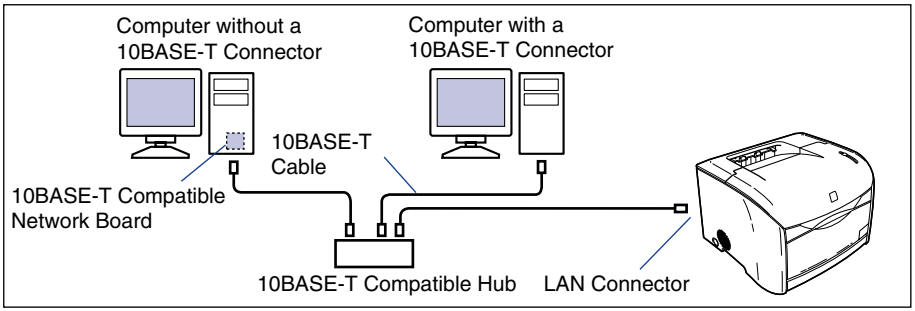

- When connecting to a 100BASE-TX Ethernet network

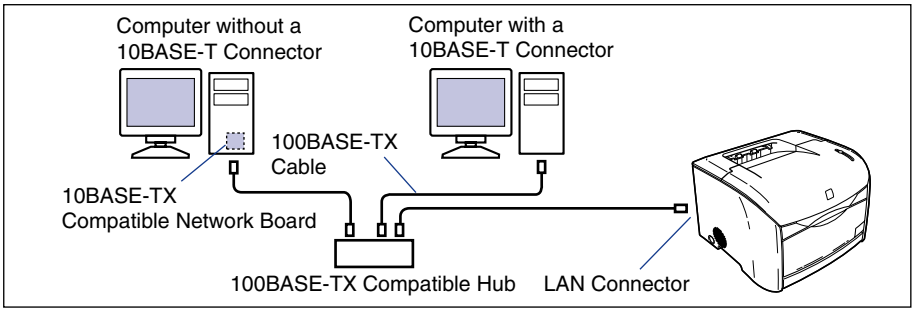

IMPORTANT

- The network board for this printer cannot connect to networks other than those listed above.
- Make sure there is port available on the hub you will connect to. If there are no available ports, the hub will need to be expanded.

NOTE

If you are connecting the printer to a 100BASE-TX Ethernet network, all of the hubs, LAN cables, computer network boards and other devices connected to the LAN will need to support 100BASE-TX. For further details, please inquire at the store where you purchased the printer.

1 Connect the LAN cable to the LAN socket in the network board.

Make sure to use a LAN cable that is compatible with the LAN socket on the network board as appropriate for the network you are using.

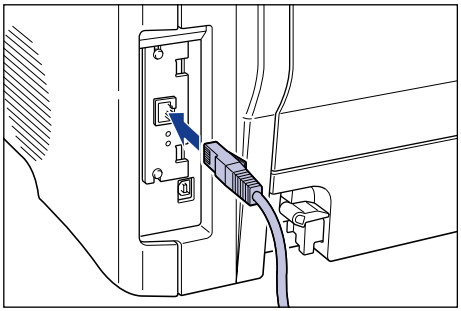

2 Connect the other end of the LAN cable to a hub.

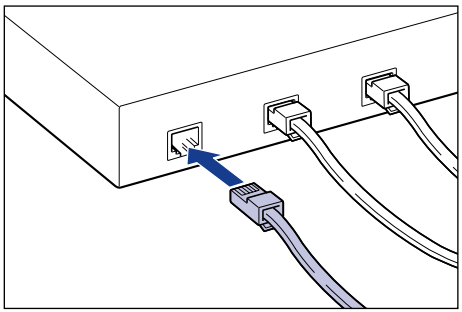

Loading and Collecting Paper

2
CHAPTER

This chapter describes the types of paper that can be used with this printer, and how to use the paper sources and catch trays.

Paper Requirements 2-2
- Usable Paper 2-2
- Printable Area 2-6
- Paper You Cannot Use 2-7
- Storing Blank Paper 2-8
- Storing Printouts 2-8

Paper Sources 2-9
- Paper Source Type 2-9
- Paper Source Sheet Capacities 2-10
- Paper Source Selection 2-10

Paper Output 2-12
- Output Tray Type 2-12
- Paper Output Tray Capacities 2-13
- Output Tray Selection 2-14

Printing from the Multi-purpose Tray 2-15
- Opening and Closing the Multi-Purpose Tray 2-16
- Printing on Plain Paper, Heavy Paper or Transparencies 2-18
- Printing Envelopes 2-26

Printing from the Paper Cassette 2-34
- Loading Paper into the Paper Cassette 2-34
- Changing the Paper Size of the Paper Cassette 2-40

Paper Requirements

Usable Paper

To get the most out of the features of this printer, you should use the right kind of paper. If you use poor quality paper, the printing quality will deteriorate and the paper will jam easily.

IMPORTANT

- The printing speed may drop depending on the paper orientation, paper size, paper type and number of papers printed.
  - Envelopes: Color Approx. 2.5 ppm, Black and White Approx. 4 ppm
- When you print continuously on paper narrower the A4 size (210.0 mm), a safety feature that prevent printer damage due to overheating, etc. may be activated, causing the printing speed to drop. (When black and white printing, the printing speed may even drop to Approx. 4 ppm.)

Paper Sizes

You can use the following paper sizes with this printer. The symbol "O" indicates paper sizes that can be loaded, and "X" indicates paper that cannot be loaded.

Paper Size	Dimensions	Paper Source	
		Multi-purpose Tray	Cassette 1 (Optional)
A5	148.5 mm x 210.0 mm	O	O
B5	182.0 mm x 257.0 mm	O	O
A4	210.0 mm x 297.0 mm	O	O
Letter	215.9 mm x 279.4 mm	O	O
Executive	184.2 mm x 266.7 mm	O	O
Legal	215.9 mm x 355.6 mm	O	O
Envelope DL	110.0 mm x 220.0 mm	O	X
Envelope COM10	105.0 mm x 241.0 mm	O	X
Envelope C5	162.0 mm x 229.0 mm	O	X
Envelope Monarch	98.0 mm x 191.0 mm	O	X
Envelope B5	176.0 mm x 250.0 mm	O	X

Paper Size	Dimensions	Paper Source	
		Multi-purpose Tray	Cassette 1 (Optional)
Index Card	76.2 mm x 127.0 mm	O	X
Custom Paper Size Width: 76.2 - 215.9 mm Height: 127.0 - 355.6 mm	-	O	X

Paper Types

You can use the following types of paper with this printer. The symbol "O" indicates paper types that can be loaded, and "X" indicates paper that cannot be loaded.

Paper Type	Printer Driver Setting	Paper Source	
		Multi-purpose Tray	Cassette 1 (Optional)
Plain Paper (64 - 105 g/m^2)	Plain Paper	O	O
Heavy Paper (106 - 135 g/m^2)	Heavy Paper	O	X
Transparency (Only for black and white printing)	Transparency	O	X
Envelope	Envelope*	O	X

* The envelope paper type is automatically selected when either [Page Size] or [Output Size] is set to an envelope size.

■ Capacities

Paper Type	Paper Source	
	Multi-purpose Tray	Cassette 1 (Optional)
Plain Paper (64 g/m^2)	Approx. 125 sheets	Approx. 250 sheets
Heavy Paper (135 g/m^2)	Approx. 80 sheets	-
Transparency (Only for black and white printing)	Approx. 60 sheets	-
Envelope	Approx. 10 sheets	-

■ Plain Paper

This printer can print on plain paper with width in the range of 76.2 to 215.9 mm, length in the range of 127.0 to 355.6 mm, and weight in the range of 64 to 105 g/m^2 including the standard paper sizes: A4, B5, A5, Legal, Letter, and Executive.

Plain paper can be loaded in either the multi-purpose tray or in the paper cassette (only when the optional 250-sheet paper feeder is installed).

■ Heavy Paper

This printer can print on heavy paper with width in the range of 76.2 to 215.9 mm, length in the range of 127.0 to 355.6 mm, and weight in the range of 106 to 135 g/m^2 including the standard paper sizes: A4, B5, A5, Legal, Letter, and Executive. Heavy paper should be loaded in the multi-purpose tray with the surface to be printed on facing up.

IMPORTANT

The printing speed drops when printing on heavy paper.

■ Transparency

This printer can print on A4 or Letter size transparencies. Transparencies should be loaded in the multi-purpose tray.

IMPORTANT

- Transparencies can only be printed in black and white.
- Thoroughly fan through each sheet before loading transparencies as they easily stick to each other.
- The printing speed drops when printing transparencies.

■ Envelope

The envelopes that can be used with this printer are as follows:

Envelope DL
(110.0 mm x 220.0 mm)

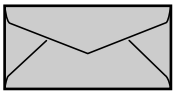

Envelope Monarch
(98.0 mm x 191.0 mm)

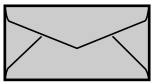

Envelope B5
(176.0 mm x 250.0 mm)

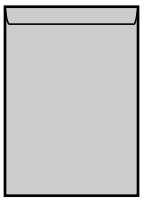

Envelope COM10
(105.0 mm x 241.0 mm)

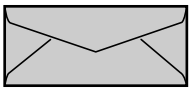

Envelope C5
(162.0 mm x 229.0 mm)

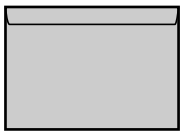

*You cannot use envelopes (Envelope DL, Envelope COM10, Envelope Monarch, Envelope C5) that have a flap on the short edge.

IMPORTANT

- The following envelopes cannot be used with this printer. Using any of these envelopes may result in paper jams that are difficult to clear or may cause damage to the printer.
  - Envelopes with fasteners or snaps
  - Envelopes with address windows
  - Envelopes with adhesive on the surface
  - Wrinkled or creased envelopes
  - Poorly manufactured envelopes in which the glued parts are uneven
  - Irregularly-shaped envelopes
- Before loading the envelopes, push down on the stack of envelopes to expel any remaining air, then press down firmly along the folded edges to crease the edges flat.
- Do not print on the reverse side (glued side) of envelopes.
- The printing speed drops when printing on envelops.

NOTE

Printing on envelopes may produce wrinkles in the envelopes.

Printable Area

The printable area of this printer is as follows.

■ Plain Paper / Heavy Paper / Transparency

You cannot print on any area within 5 mm of the edges of the paper.

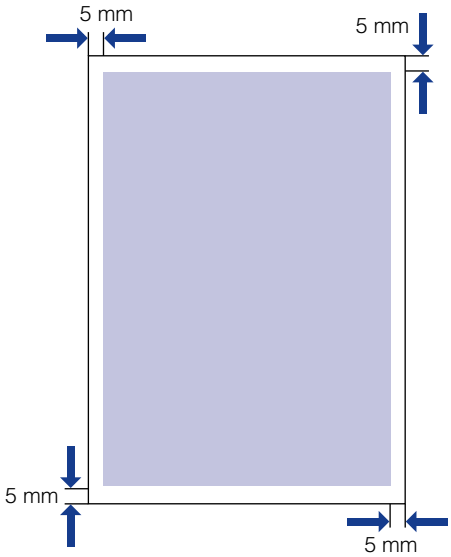

■ Envelope

You cannot print on any area within 10 mm of the edges of an envelope.
Depending the application you use for printing, you may need to adjust the position of the envelopes during printing.

(Sample : Envelope COM10)

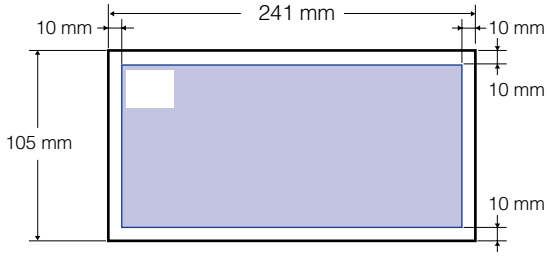

Paper You Cannot Use

To avoid problems such as paper jams and damage to the printer, do not use any of the following types of paper.

IMPORTANT

- Paper that jams easily
  - Paper that is too thick or too thin
  - Irregularly-shaped paper
  - Wet or moist paper
  - Torn or damaged paper
  - Rough, extremely smooth, or glossy paper
  - Paper with binding holes or perforations
  - Curled or creased paper
  - Specially coated paper (coated paper for ink jet printers, etc.)
  - Paper that has already been printed on using a copy machine or other laser printer. (The reverse side of the paper is also unusable.)
  - Paper with jagged edges
  - Wrinkled paper
  - Paper with the corners folded
- Paper that changes properties at high temperatures
  - Paper that contains ink that could melt, burn, evaporate or emit harmful gases under the heat (approx. 185°C or 365°F) of the fuser unit.
  - Heat-sensitive paper
  - Treated color paper
  - Specially coated paper (coated paper for ink jet printers, etc.)
  - Paper with adhesive on the surface
- Paper that causes the printer to malfunction or damages the printer
  - Carbon paper
  - Paper with staples, clips, ribbons or tape
  - Paper that has already been printed on using a copy machine or other laser printer. (The reverse side of the paper is also unusable.)
- Paper that is difficult for the toner to fix onto
  - Paper with rough surfaces, such as handmade or rice paper
  - Specially coated paper (coated paper for ink jet printers, etc.)
  - Paper containing thick fibers

Storing Blank Paper

Even standard paper may deteriorate if not stored correctly. Degraded paper can cause paper feed problems and paper jams, and may reduce printing quality.

Observe the following guidelines when storing and handling paper:

IMPORTANT

- Store paper away from moisture since paper quality deteriorates in a moist environment.
- The paper wrapper around new paper acts to prevent dampness and drying. Leave the wrapper intact until you are ready to use the paper. You should also re-wrap the wrapper around paper that you do not use.
- Store paper on a flat surface.
- Do not store paper on the floor where water and moisture can accumulate.
- Do not store paper in a place where it will curl or be creased.
- Do not store paper vertically or store too many stacks of paper in one pile.
- Do not store paper in places exposed to direct sunlight or high humidity.
- If there are extreme differences in temperature between the storage area and the place where the paper is used, leave the paper in the wrapper in the usage area for about a day to allow the paper to adjust before using it. Rapid changes in temperature and humidity can cause paper to curl or wrinkle.

Storing Printouts

Observe the following guidelines when handling or storing documents printed using this printer.

IMPORTANT

- Do not store in clear folders or with other PVC materials. This can dissolve the toner, causing the paper to stick to the PVC material.
- When gluing paper, be sure to use insoluble adhesive. The use of soluble adhesives can cause the toner to dissolve. When you first use an adhesive, test it on an unneeded printout before use.
  Whenever you stack printouts, check that the documents are completely dry. If the printouts are stacked before they are not completely dry, the toner may dissolve.
- Store paper on a flat surface. If the paper becomes folded or wrinkled, the toner may peel.
- Do not store in a high temperature place. This can cause the toner to melt, making the colors bleed.
- If you are storing printouts for a long period of time (2 years or more), store them in a binder, etc. (Long-term storage can make printouts appear discolored due to discolorations in the paper.)

Paper Sources

The standard configuration of the printer only provides the multi-purpose tray as a paper source. By installing the optional 250-sheet paper feeder, paper can be fed from a total of 2 paper sources.

Paper Source Type

This printer has the following paper sources:

■ Paper Source / Capacity

Multi-purpose Tray	125 sheets (64 g/m^2)
Cassette 1	250 sheets (64 g/m^2)

■ Maximum Capacity

375 sheets (64 g/m^2)

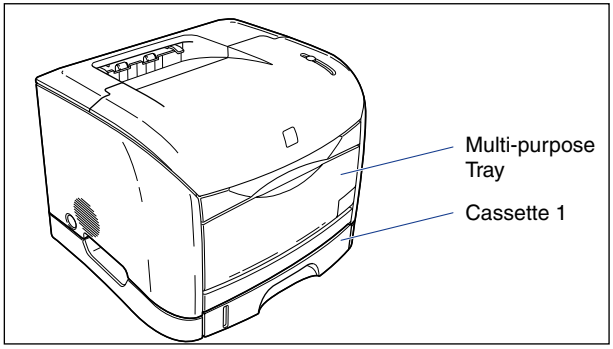

Paper Source Sheet Capacities

Paper Type	Paper Source	
	Multi-purpose Tray	Cassette 1
Plain Paper (64 g/m²)	Approx. 125 sheets	250 sheets
Heavy Paper (135 g/m²)	Approx. 80 sheets	-
Transparency (Only for black and white printing)	Approx. 60 sheets	-
Envelope	Approx. 10 sheets	-

Paper Source Selection

You can choose the paper source using the [Paper Source] sheet in the printer driver.

1 Display the [Paper Source] sheet and select the paper source.

To display the [Paper Source] sheet in the printer driver, refer to "Specifying Printing Options," on p. 4-10.

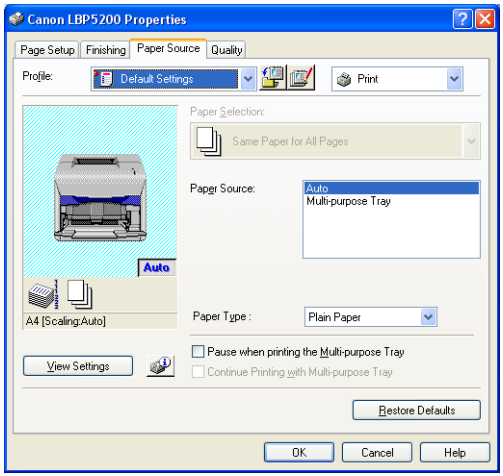

Setting Name	Setting Value	Description
Paper Selection	Same Paper for All Pages	Uses the same paper source for the entire print job. If the [Paper Source] is set to [Auto] and [Continue Printing with Multi-purpose Tray] is checked, however, the printer automatically switches the paper source to the multi-purpose tray when cassette1 runs out of paper during a print job.
	Different for First, Others, and Last*	Different paper can be selected for each page, such as for printing the covers on a different type of paper.
	Different for First, Second, Others, and Last*	
	Transparency Interleaving*	Allows you to place paper sheets between transparencies.
Paper Source	Auto Multi-purpose Tray Cassette 1*	Selects the paper source to feed paper from. The settings that are displayed vary depending on the [Paper Selection] setting.
First Page*		
Second Page*		
Other Pages*		
Last Page*		
Interleaf Sheet*	Auto Cassette 1*	
Paper Type	Plain Paper Heavy Paper Transparencies Envelope	Selects the type of paper being used. (See p. 2-3)
Pause When Printing from the Multi-purpose Tray	-	Determines whether the printer will pause and display a message or print without delay when feeding paper from the multi-purpose tray.
Continue Printing with Multi-purpose Tray*	-	Determines whether the printer will automatically switch the paper source to the multi-purpose tray when cassette1 runs out of paper during a print job.

* These settings are only available when the optional 250-sheet paper feeder is installed.

Paper Output

Output Tray Type

This printer is fitted with two output trays, the "Output Tray" on the top of the printer and the "Sub-Output Tray" on the rear.

■ Output Tray

Pages are output to the output tray on the top of the printer with the printed side facing down.

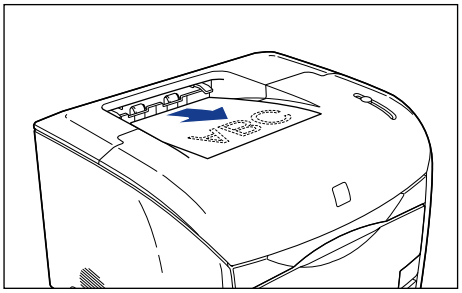

NOTE

The output tray can hold up to approximately 125 sheets of plain paper (64 g/m^2).

■ Sub-Output Tray

Pages are output to the sub-output tray on the rear of the printer with the printed side facing up. Because paper output to the sub-output tray is ejected directly from the printer, it is suitable for printing on transparencies, envelopes and other media that is easy to curl.

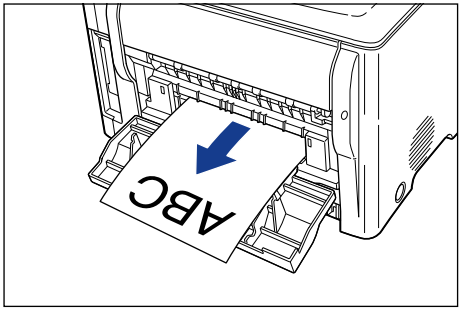

IMPORTANT

Paper should be removed from the sub-output tray one sheet at a time as it is ejected from the printer.

Paper Output Tray Capacities

The number of sheets that can be output to each of the Output Tray and the Sub-Output Tray is as follows.

Paper Type	Paper Source	
	Output Tray	Sub-Output Tray
Plain Paper (64 g/m^2)	Approx. 125 sheets	1 sheet
Heavy Paper (135 g/m^2)	Approx. 50 sheets	1 sheet
Transparency (black and white printing only)	Approx. 10 sheets	1 sheet
Envelope	Approx. 10 sheets	1 sheet

Switching to the Sub-Output Tray

To print to the sub-output tray, simply open the sub-output tray.

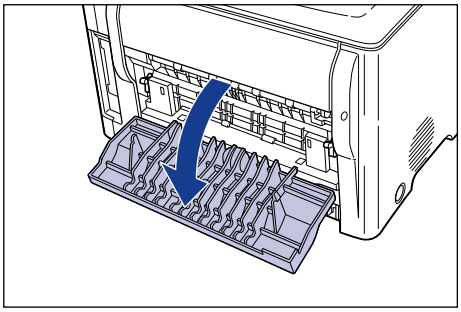

CAUTION

The fuser unit is inside the sub-output tray. Because the area around the fuser unit becomes hot while the printer is in use, take care to avoid touching this area. Doing so may cause burns.

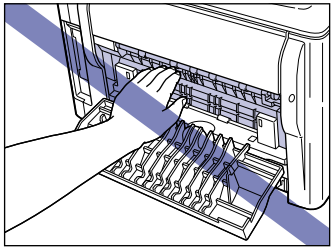

Switching to the Output Tray

To print to the output tray, simply close the sub-output tray.

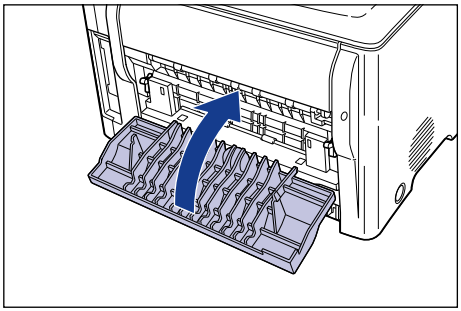

Printing from the Multi-purpose Tray

The multi-purpose tray can be loaded with up to 125 sheets of paper (64 g/m^2) with dimensions in the range of 76.2 to 215.9 mm wide and 127.0 to 355.6 mm long. You can also load transparencies, envelopes and other paper that cannot be loaded in the paper cassette.

Because the procedure for loading paper varies depending on the paper type, refer to the appropriate procedure for the paper you want to load.

- Plain Paper / Heavy Paper / Transparency (See "Printing on Plain Paper, Heavy Paper or Transparencies," on p. 2-18)
- Envelope (See "Printing Envelopes," on p. 2-26)

IMPORTANT

Do not place anything on the multi-purpose tray apart from the paper that you will print on. Do not push down on the tray, or apply any unnecessary force. Doing so may damage the multi-purpose tray.

NOTE

Remove all paper from the multi-purpose tray before closing it. Keep the multi-purpose tray closed when you are not using it.

Opening and Closing the Multi-Purpose Tray

Opening the Multi-Purpose Tray

Open the multi-purpose tray using the following procedure.

1 **Open the multi-purpose tray.**

Grasp the handhold in the center of the printer, and open the multi-purpose tray.

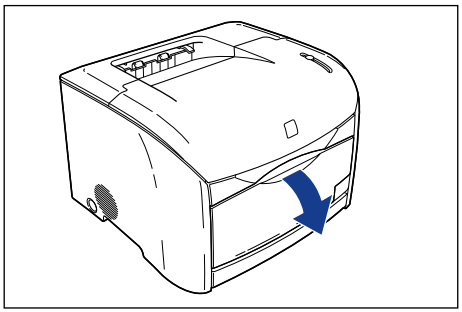

2 **Pull out the auxiliary tray.**

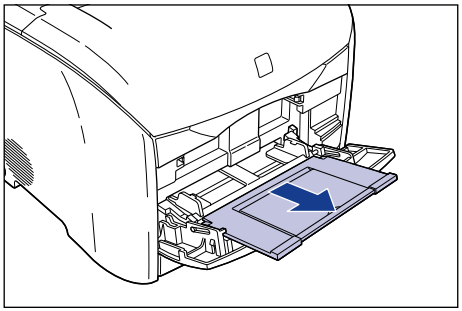

IMPORTANT

Be sure to pull out the auxiliary tray when you load paper in the multi-purpose tray.

3 **Open the extension tray when you are loading longer paper sizes such as A4.**

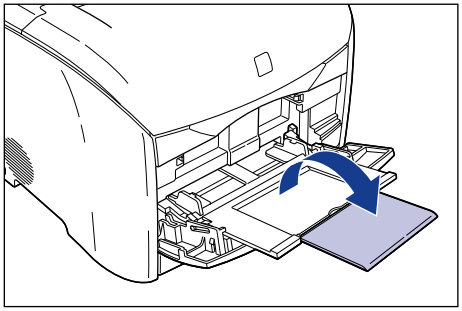

Closing the Multi-Purpose Tray

Close the multi-purpose tray using the following procedure. Keep the multi-purpose tray closed when you are not using it.

---

1 **Remove any paper from the tray, then close the extension tray and return the auxiliary tray to its original position.**

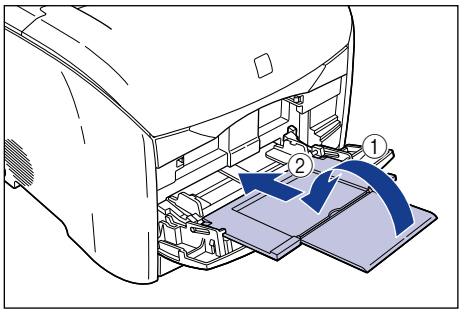

2 **Close the multi-purpose tray.**

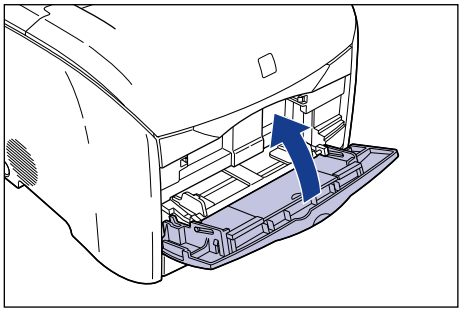

Printing on Plain Paper, Heavy Paper or Transparencies

Use the following procedure to load plain paper, heavy paper, or transparencies.

IMPORTANT

- Transparencies can only be printed in black and white.
- Thoroughly fan through each sheet before loading transparencies as they easily stick to each other.
- The printing speed drops when printing transparencies.

1 Open the multi-purpose tray and pull out the auxiliary tray.

Refer to "Opening the Multi-Purpose Tray," on p. 2-16 for instructions on opening the multi-purpose tray.

2 Push the paper guides out a little bit wider than the actual paper width.

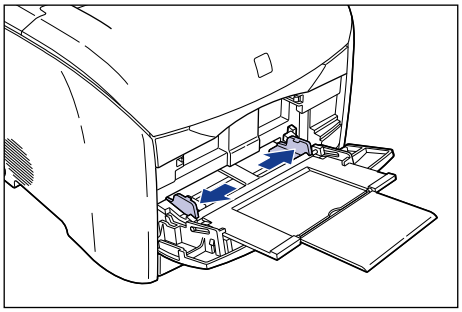

3 When loading transparencies, fan them in small batches and line up the edges.

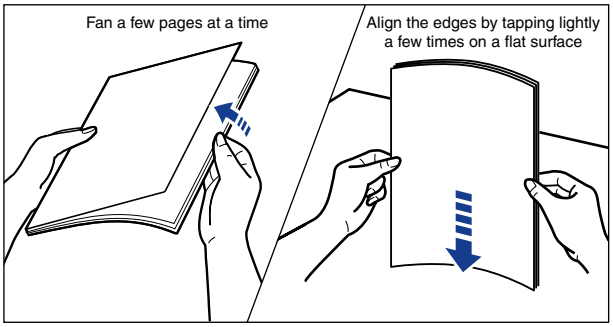

CAUTION

When loading paper, take care not to cut your hands with the edges of the paper.

IMPORTANT

- Make sure to thoroughly separate individual sheets of transparency before loading them. If the sheets are sufficiently separated, multiple sheets will feed at once causing paper jams.
- When fanning or aligning the transparencies, try to hold the edges to avoid touching the printing surface.
- Take care not to mark or stain the printing surface of the transparencies with fingerprints, dust, or oil, as this may result in poor print quality.

4 Gently load the stack of paper with the printing side facing up until it touches the back of the tray.

Be sure that the stack of paper passes under the paper limit guides.

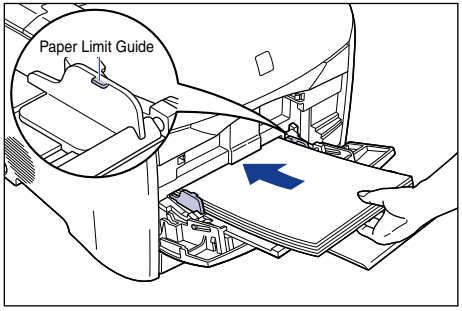

CAUTION

When loading paper, take care not to cut your hands with the edges of the paper.

IMPORTANT

- The multi-purpose tray can be loaded with up to the number of sheets listed below.
  - Plain Paper: Approx. 125 sheets (64 g/m^2)
  - Heavy Paper: Approx. 80 sheets (128 g/m^2)
  - Transparency: Approx. 60 sheets
- Check that there is sufficient clear space between the paper limit guides and the paper. If there is no free space, slightly reduce the amount of paper.
- Load the paper so that it is straight.
- If the rear edge of the paper stack is not properly aligned, the paper may misfeed or become jammed.
- If the paper is curled or folded at the corners, flatten it out before loading.

- If you use paper that has been poorly cut, the paper may have a tendency to double-feed. In this case, thoroughly line up the edges of the paper on a flat surface before loading it.

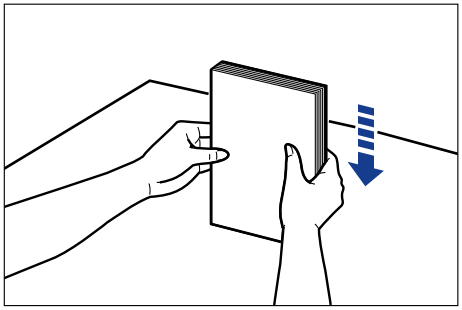

NOTE

To print on letterhead paper or paper with a logo already printed on it, load the paper so that the printed side is facing up, as shown below.

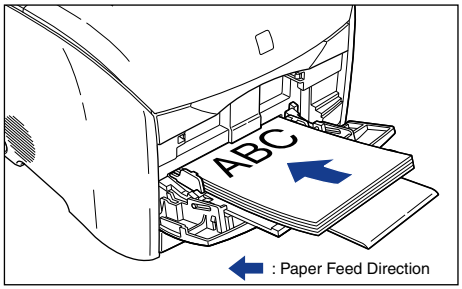

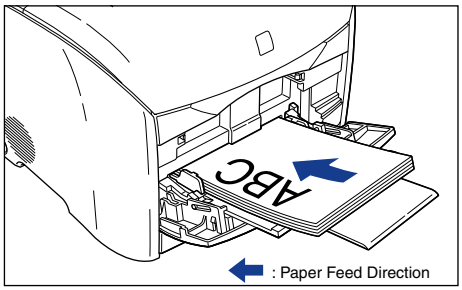

5 Adjust the paper guides to meet both sides of the stack.

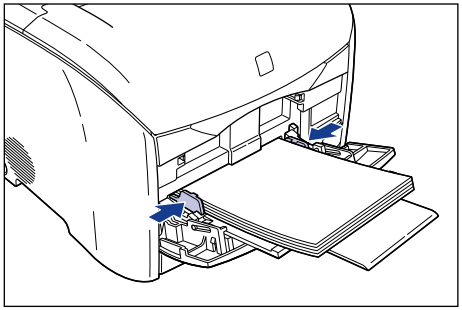

IMPORTANT

- Always make sure the paper guides match the width of the paper. If the paper guides are too loose or too tight, the paper will not feed properly and this will cause paper jams.

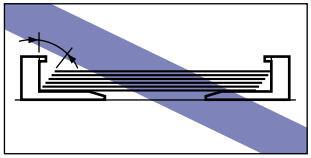

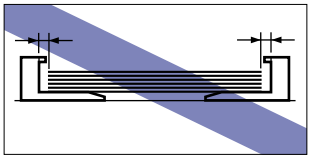

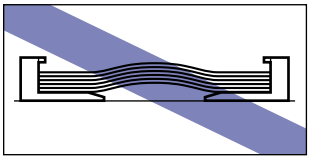

- Store unopened transparencies at a temperature between 0 and 35˚C (32 to 95˚F) and a humidity between 35 and 85%.
- Avoid leaving the transparencies exposed to air. Store them in their packaging.
- Do not touch the paper in the multi-purpose tray or pull it out during printing as this may cause printer errors.

You are now ready to configure the printer driver settings.

6 Select [Print] from the [File] menu in the application. Select the name of this printer from the [Name] or [Printer Name] field and click [Properties].

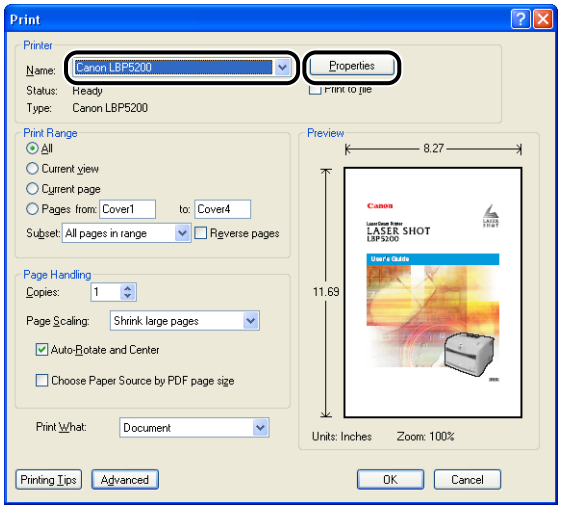

The Properties dialog box for the printer is displayed.

7 Display the [Page Setup] sheet, then set the [Page Size] field to the size of the document that you created in the application.

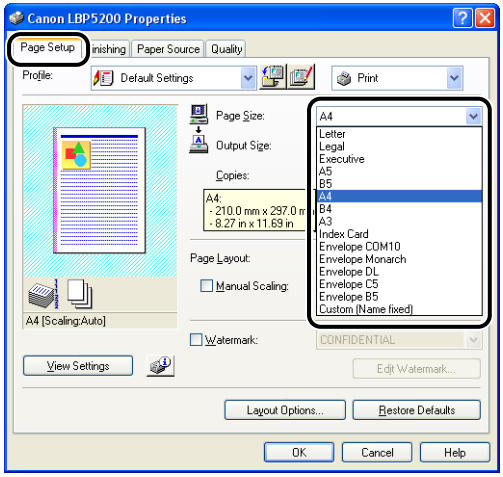

8 Set the [Output Size] to the size of the paper loaded in the tray as needed.

Select [A4] or [Letter] when printing transparencies.

Leave this field set to [Match Page Size] when the document page size and the size of the paper loaded in the multi-purpose tray are the same, since there is no need to change the setting.

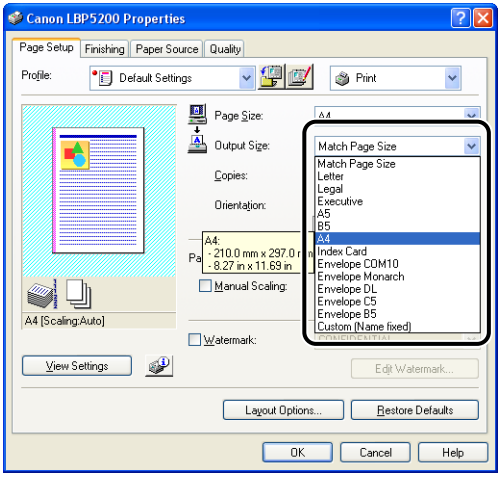

IMPORTANT

If the [Page Size] and [Output Size] settings are different, the printer automatically enlarges or reduces the printout.

9 Display the [Paper Source] sheet and set the [Paper Source] setting to [Multi-purpose Tray].

If you change the [Paper Selection] setting to a value other than [Same Paper for All Pages], even though the [Paper Source] field will be replaced by [First Page], [Other Pages], and other fields, these are all configured in the same way as the [Paper Source] setting.

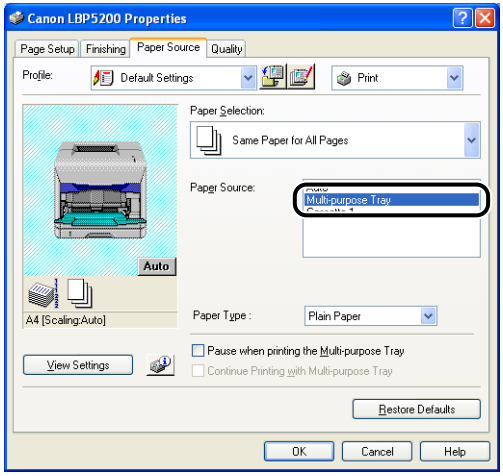

NOTE

When the optional 250-sheet paper feeder is installed you can interleave paper sheets between transparencies by setting the [Paper Selection] field to [Transparency Interleaving].

10 Change the [Paper Type] setting to match the type of paper loaded in the paper tray.

Set this to [Plain Paper] for regular paper, [Heavy Paper] for thick paper and cardboard, and to [Transparencies] for transparencies.

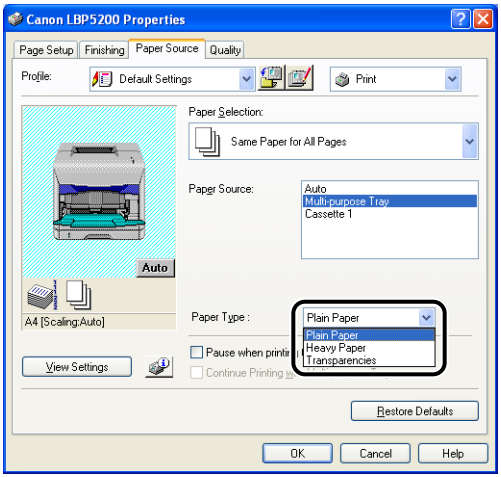

11 Click the [OK] button to close the Properties dialog box.

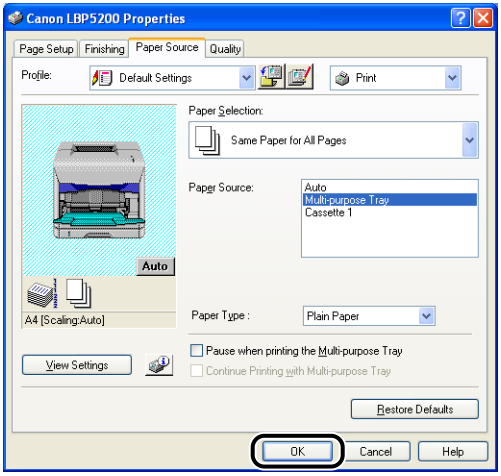

12 Click the [OK] button to start printing.

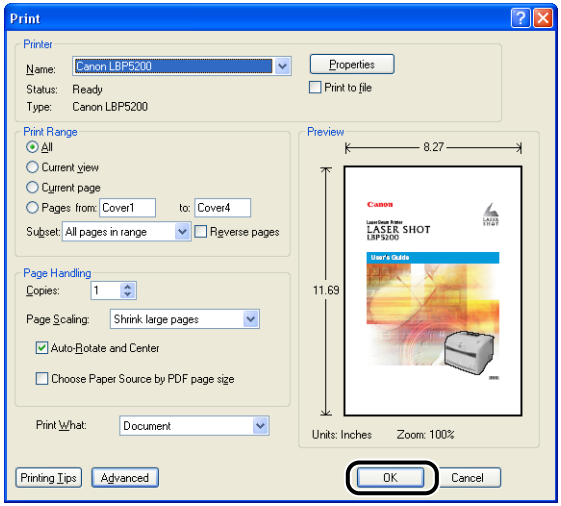

Printing Envelopes

Perform the following procedure to load envelopes in the multi-purpose tray.

IMPORTANT

- The envelopes that can be used with this printer are as follows:

Envelope DL
(110.0 mm x 220.0 mm)

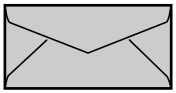

Envelope Monarch
(98.0 mm x 191.0 mm)

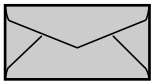

Envelope B5
(176.0 mm x 250.0 mm)

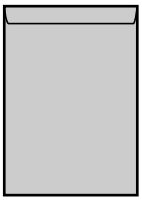

Envelope COM10
(105.0 mm x 241.0 mm)

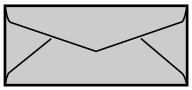

Envelope C5
(162.0 mm x 229.0 mm)

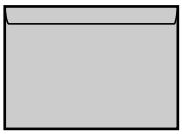

*You cannot use envelopes (Envelope DL, Envelope COM10, Envelope Monarch, Envelope C5) that have a flap on the short edge.

- The following envelopes cannot be used with this printer. Using any of these envelopes may result in paper jams that are difficult to clear or may cause damage to the printer.
  - Envelopes with fasteners or snaps
  - Envelopes with address windows
  - Envelopes with adhesive on the surface
  - Wrinkled or creased envelopes

- Poorly manufactured envelopes in which the glued parts are uneven
- Irregularly-shaped envelopes

- Before loading the envelopes, flatten the stack of envelopes to release any remaining air, and press the fold lines along the edges tight.
- Do not print on the reverse side (glued side) of envelopes.
- The printing speed drops when printing envelopes.

NOTE

Printing on envelopes may produce wrinkles in the envelopes.

1 Open the multi-purpose tray and pull out the auxiliary tray.

Refer to "Opening the Multi-Purpose Tray," on p. 2-16 for instructions on opening the multi-purpose tray.

2 Push the paper guides out a little wider than the actual width of the envelopes.

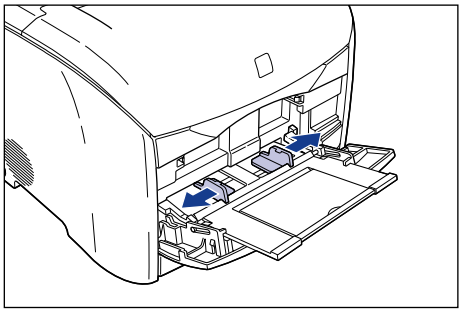

3 Place the stack of envelopes on a flat surface and push on the top surface to clear out any trapped air, then push down firmly along the folded edges to flatten the envelopes.

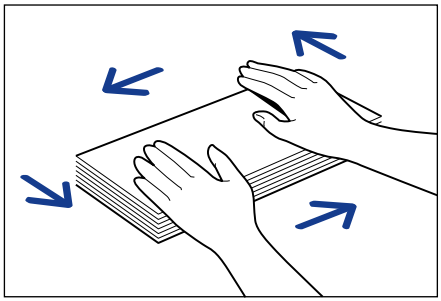

CAUTION

When loading envelopes, be careful not to cut your hands with the edges of the envelopes.

4 Loosen any stiff corners of the envelopes and flatten curls as shown in the figure.

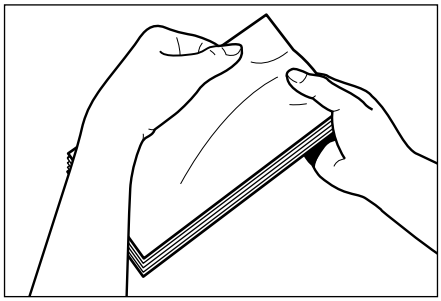

5 Align the edges of the envelopes on a flat surface.

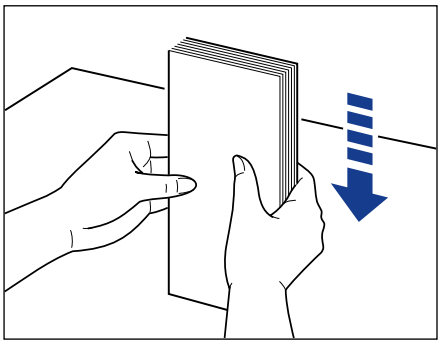

6 Load the stack of envelopes with the flaps closed and on the left side, and the address side facing up. Gently insert the stack until it touches the back of the multi-purpose tray as shown in the figure.

Be sure that the stack of envelopes passes beneath the paper limit guides.

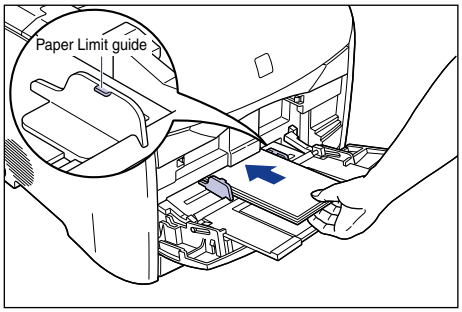

CAUTION

When loading envelopes, be careful not to cut your hands with the edges of the envelopes.

IMPORTANT

- Up to 10 envelopes can be loaded at a time.
- Check that there is sufficient clear space between the paper limit guides and the envelopes. If there is no free space, take out a few of the envelopes.
- You cannot print on the reverse side (glued side) of envelopes.
- Load the envelopes so that the flaps are on the left side.

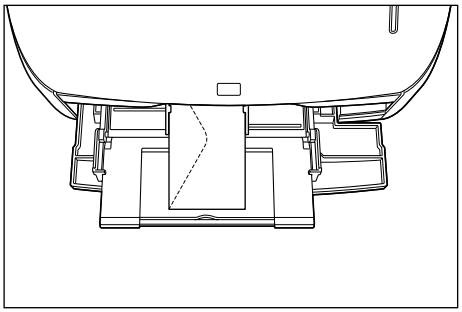

- When printing to "Envelope B5", load the envelopes with the flaps closed and the top edge facing into the printer.

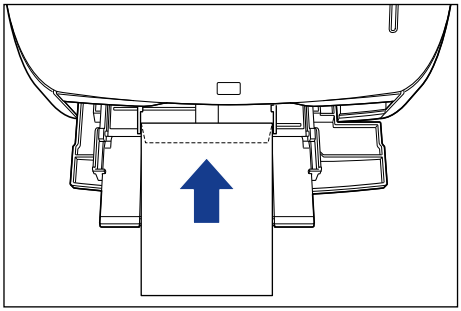

7 Adjust the paper guides to meet both sides of the stack.

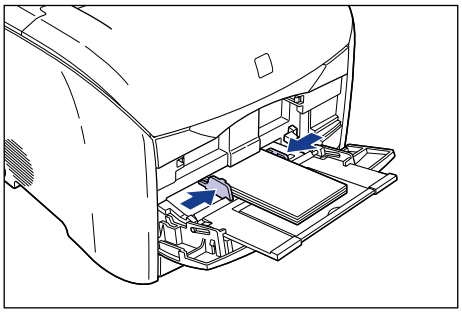

IMPORTANT

- Although you should not leave any space between the paper guides and the envelopes, do not push the paper guides so strongly that the envelopes buckle. If the paper guides are too loose or too tight, the envelopes will not feed properly and this will cause paper jams.

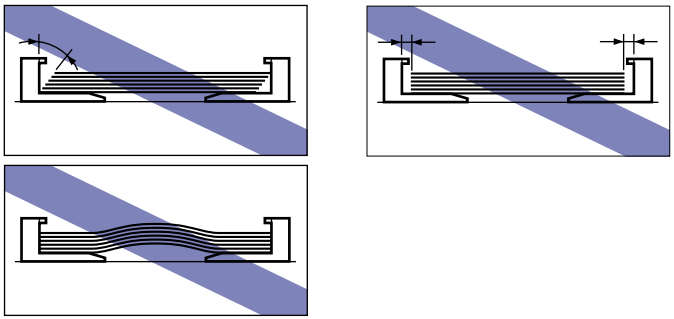

- Do not touch the envelopes in the multi-purpose tray or pull them out during printing as this may cause printer errors.

You are now ready to configure the printer driver settings.

8 Select [Print] from the [File] menu in the application. Select the name of this printer from the [Name] or [Printer Name] field and click [Properties].

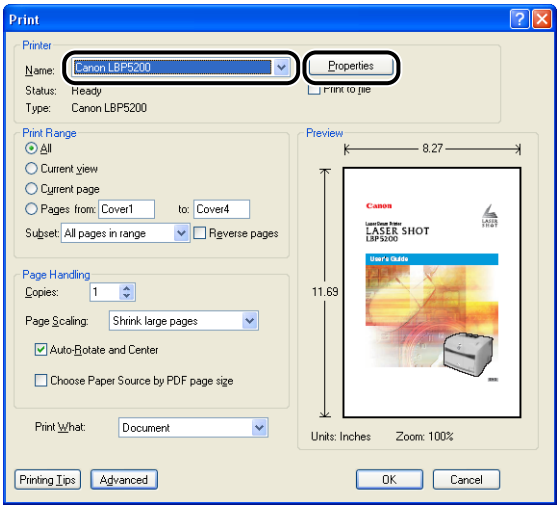

The Properties dialog box for the printer is displayed.

9 Display the [Page Setup] sheet, then set the [Page Size] field to the size of the document that you created in the application.

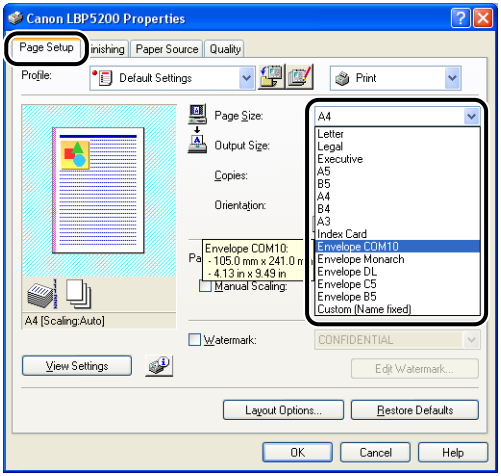

NOTE

If you set the page size to [Envelope DL], [Envelope COM10], [Envelope C5], [Envelope Monarch], or [Envelope B5], a message is displayed and the paper type is set to [Envelope] automatically.

10 Set the [Output Size] field to the size of the paper loaded in the tray as necessary.

Leave this field set to [Match Page Size] when the document page size and the size of the paper loaded in the multi-purpose tray are the same, since there is no need to change the setting.

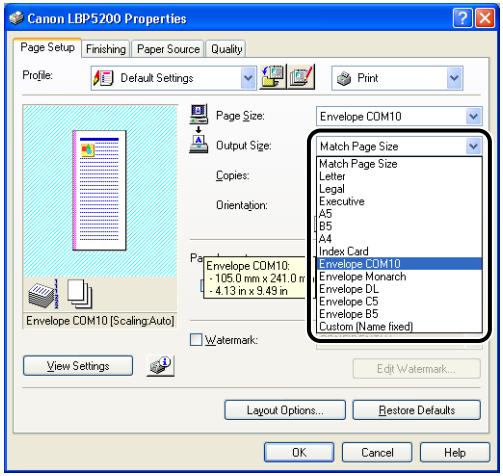

IMPORTANT

If the [Page Size] and [Output Size] settings are different, the printer automatically enlarges or reduces the printout.

11 Click [OK] to close the Properties dialog box.

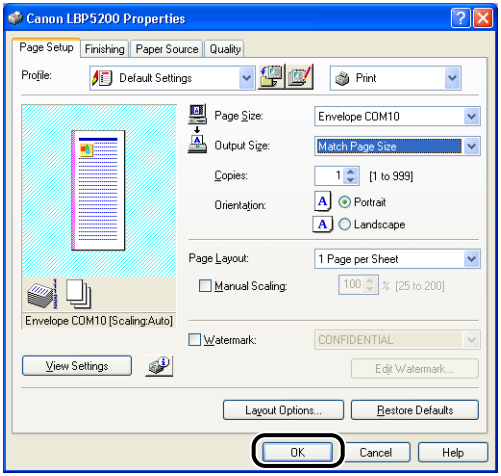

12 Click the [OK] button to start printing.

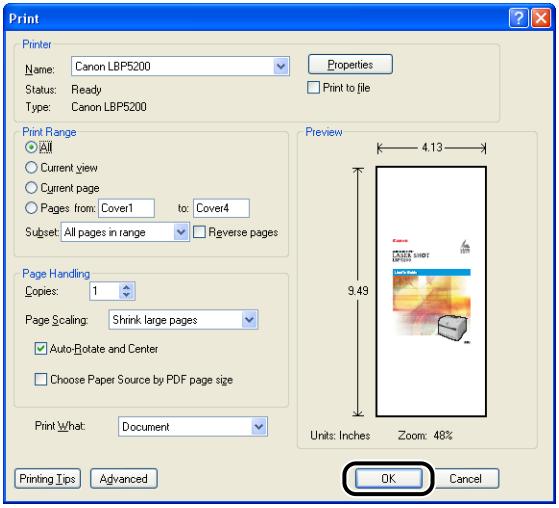

Printing from the Paper Cassette

Up to approximately 250 sheets of plain paper (64 g/m^2) in sizes of A4, B5, A5, Legal, Letter, and Executive can be loaded in the paper cassette (Cassette1) of the optional 250-sheet paper feeder. If the paper source runs out of paper, the paper lamp (red) will flash and you will need to load more paper.

Loading Paper into the Paper Cassette

Use the following procedure to load the paper cassette with paper.

Always load the paper lengthways when loading the paper cassette.

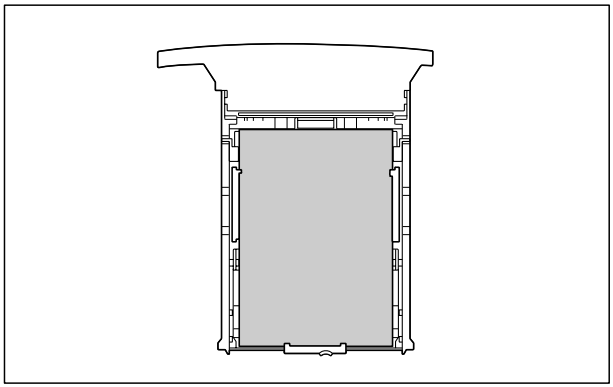

IMPORTANT

- When loading paper for the first time after installing the paper feeder, be sure to turn the printer on at least once before loading the paper.
- Do not pull paper out of the paper cassette while the printer is printing. Doing so can cause paper jams and printer faults.
- Do not load the paper cassette with anything other than plain paper (64 to 105 g/m^2). Doing so can cause paper jams and printer faults.
- Do not load paper that has jagged edges, creases, or that is extremely curly. Doing so can cause paper jams and printer faults.
- The number of sheets of plain paper that can be loaded in the paper cassette is approximately 250 (for 64 g/m^2 paper). Make absolutely sure that you do not load paper beyond the paper limit marks. Loading paper past the paper limit marks can cause paper feeding errors.
- Refer to "Usable Paper," on p. 2-2 for more details on the paper that can be used.

- Do not refill the tray until after all of the paper has run out. Refilling the cassette before it is empty can cause paper feeding errors.
- Do not touch the black rubber pad on the paper cassette. Doing so may cause paper feeding errors.

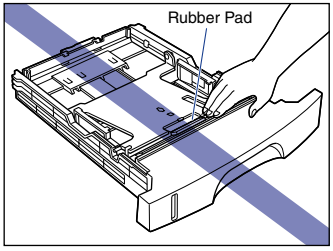

NOTE

Refer to "Changing the Paper Size of the Paper Cassette," on p. 2-40 for information on changing the paper size.

1 Pull out the paper cassette.

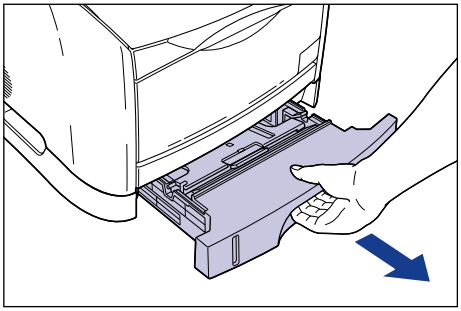

CAUTION

When loading paper, make sure that the paper cassette is pulled fully out of the printer. If you attempt to load paper when the cassette is only pulled out partway you may drop the paper cassette or knock over the printer, which can cause personal injuries.

2 Push down the plate in the paper cassette to lock it.

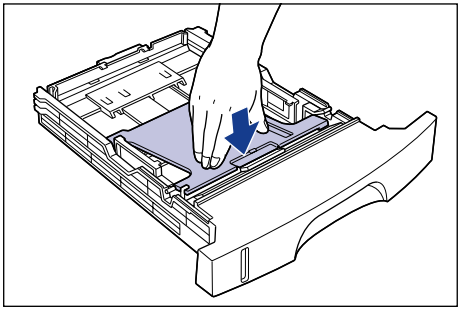

CAUTION

When the plate in the paper cassette is locked, do not touch the lock release levers on the left and right sides of the paper cassette. If the locks are released, the plate springs up forcefully, and this can cause personal injuries.

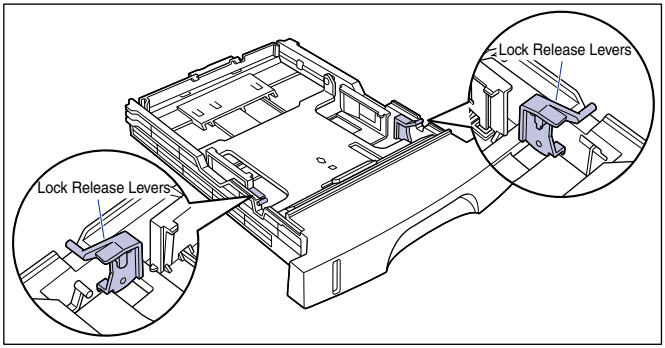

3 Load paper so that the back edge of the page touches the paper guide.

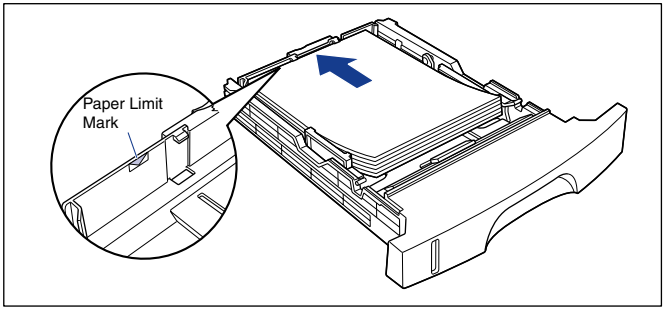

CAUTION

When loading paper, take care not to cut your hands with the edges of the paper.

IMPORTANT

- Always check that the paper guide matches the size of the paper you are loading. If the paper guide does not match the paper size that you load, paper feeding errors will occur.
- The number of sheets of plain paper that can be loaded in the paper cassette is approximately 250 (for 64 g/m^2 paper). Make absolutely sure that you do not load paper beyond the paper limit mark on the paper guide. Loading paper past the paper limit mark can cause paper feed errors.
- If you use paper that has been poorly cut, the paper may have a tendency to double-feed. In this case, thoroughly line up the edges of the paper on a flat surface before loading it.

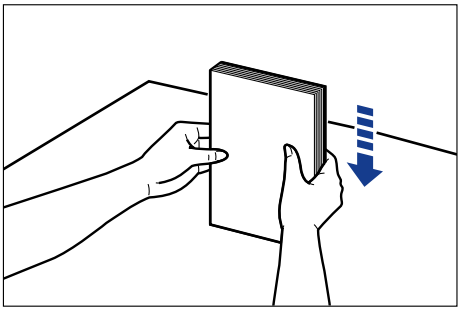

NOTE

To print on letterhead paper or paper that already has a logo already printed on it, load the paper so that the printed side is facing down, as shown below.

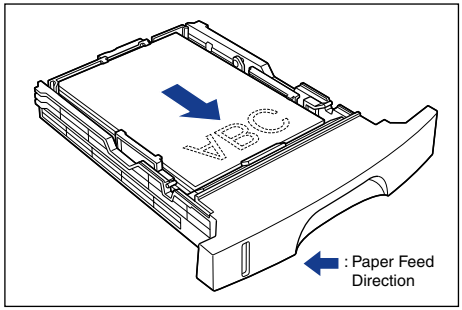

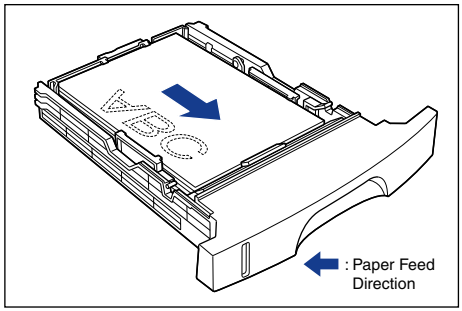

4 Press down on both sides of the paper stack to make sure that it is under the tabs on the side paper guides.

Check that there is sufficient clear space between the tabs and the paper.If there is no free space, slightly reduce the amount of paper.

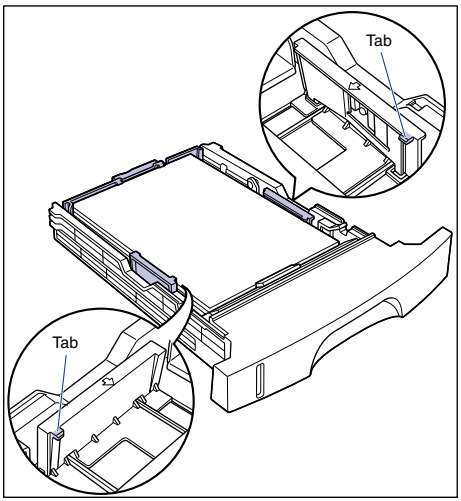

5 Insert the paper cassette into the printer.

Push the paper cassette firmly into the printer until the front side of the cassette is flush with the front surface of the printer.

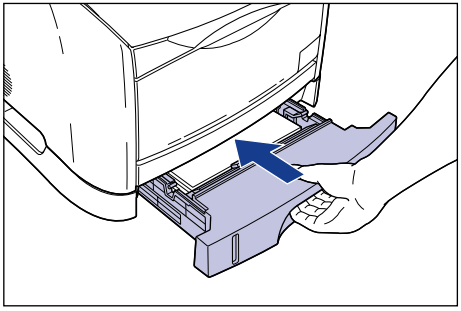

● Paper Level Indicator

The paper cassette has a paper level indicator that shows the amount of paper remaining in the cassette. If the cassette is fully loaded, the paper level indicator is at the top. Because the indicator moves down as the amount of paper drops, this gives a rough estimate of the amount of paper remaining.

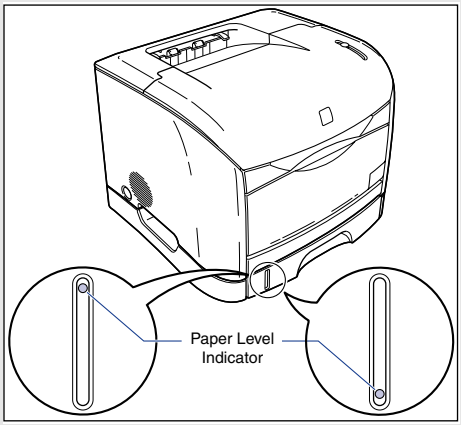

Changing the Paper Size of the Paper Cassette

The size of paper in the paper cassettes can be changed using the following procedure.

The paper sizes that can be loaded in the paper cassette are A4, B5, A5, Legal, Letter, and Executive.

IMPORTANT

Always check that the paper guide matches the size of the paper you are loading. If the paper guide does not match the paper size that you load, paper feed errors will occur.

1 Pull out the paper cassette.

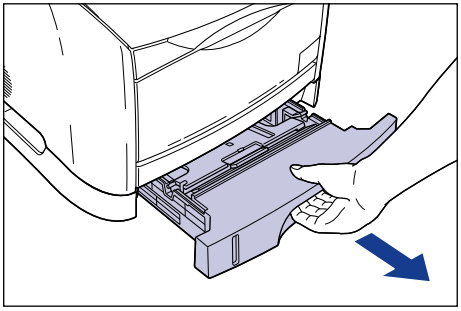

CAUTION

When loading paper, make sure that the paper cassette is pulled fully out of the printer. If you attempt to load paper when the cassette is only pulled out partway you may drop the paper cassette or knock over the printer, which can cause personal injuries.

2 Remove any remaining paper from the paper cassette.

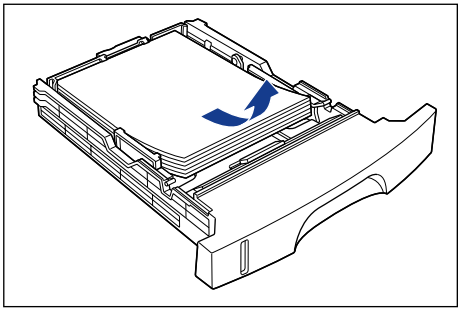

3 Push down the plate in the paper cassette to lock it.

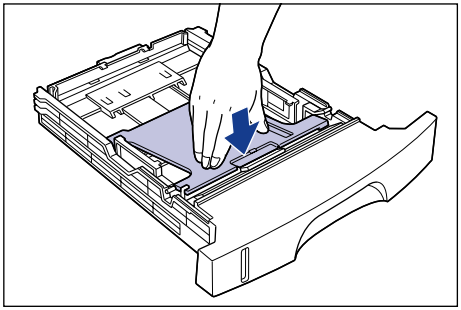

CAUTION

When the plate in the paper cassette is locked, do not touch the lock release levers on the left and right sides of the paper cassette. If the locks are released, the plate springs up forcefully, and this may cause personal injuries.

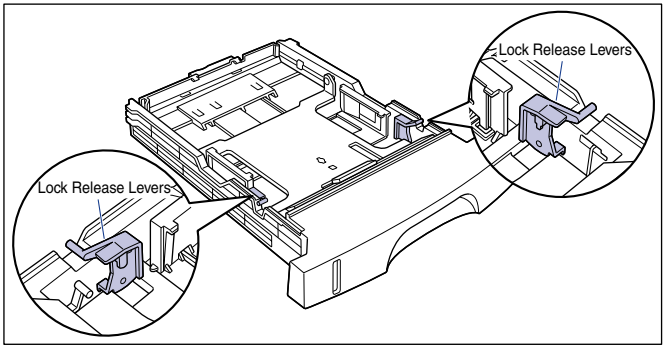

4 Squeeze the lock release lever on the rear paper guide and slide the paper guide to the mark corresponding to the paper size you want to use.

The paper size indicated on the paper guide should be aligned with the ◁ mark.

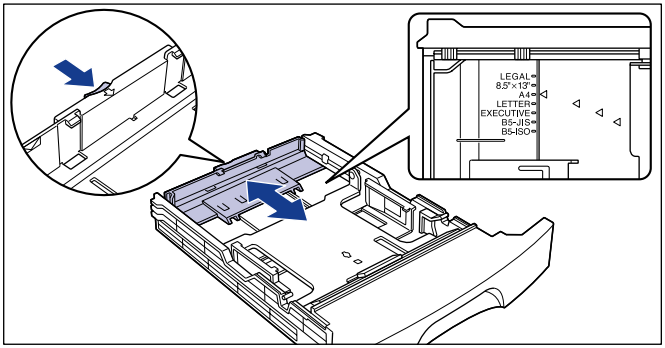

IMPORTANT

If you are using B5 size paper (182 mm x 257 mm), set the paper guide to [B5-JIS]. Do not use the [B5-ISO] position. Also, do not use the [8.5" x 13"] position.

5 Adjust the positions of both of the side paper guides to match the paper size.

When adjusting the side paper guides, hold both of the guides at the same time.

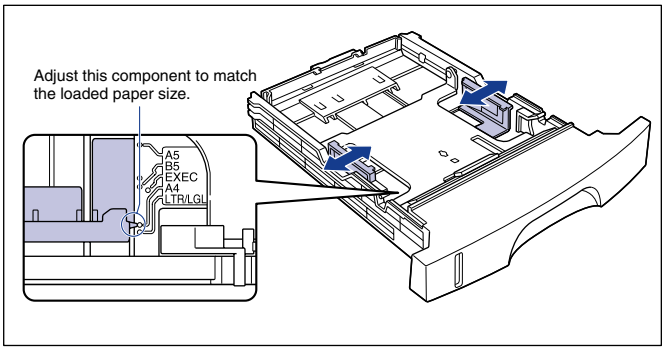

IMPORTANT

If you are using B5 size paper (182 mm x 257 mm), set the paper guides to the positions shown in the diagram ([B5-JIS] position). Do not use the [B5-ISO] position.

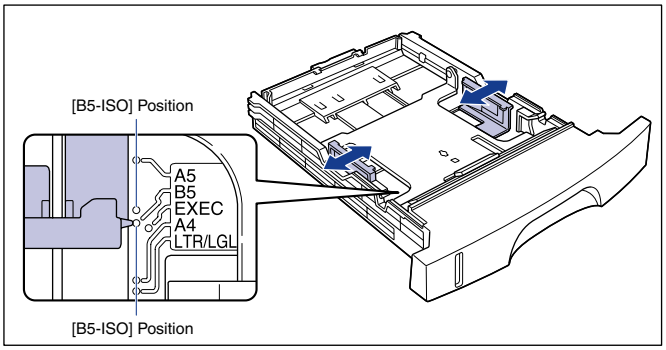

6 Load paper into the paper cassette and insert the cassette into the printer.

Refer to "Loading Paper in the Paper Cassette" (→ The previous section) for information on loading paper.

7 Using the following steps to register the size of the paper that you loaded.

This printer's paper cassette cannot automatically detect the paper size. Therefore, you need to register the size of the paper that is loaded.

8 Open the [Printers and Faxes] folder or [Printers] folder.

For Windows 98/Me/2000: Select [Settings] → [Printers] from the [Start] menu.

For Windows XP Professional/Server 2003: Select [Printers and Faxes] from the [Start] menu.

For Windows XP Home Edition: Select [Control Panel] from the [Start] menu, then click [Printers and Other Hardware] → [Printers and Faxes].

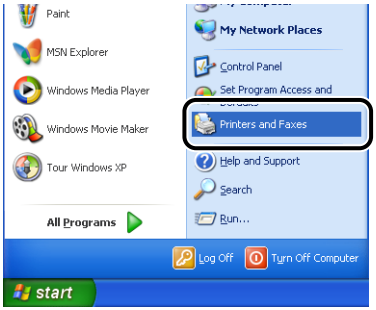

9 Select the [Canon LBP5200] icon, then select [Printing Preferences] (For Windows 2000/XP/Server 2003) or [Properties] (For Windows 98/Me) from the [File] menu.

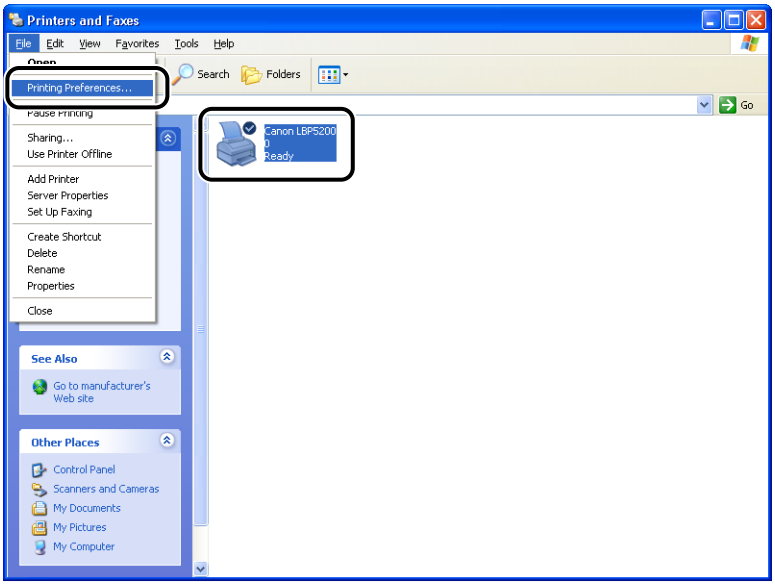

The [Properties] dialog box for the printer is displayed.

10 Display the [Page Setup] sheet, then click [ ] (Display Printer Status Window).

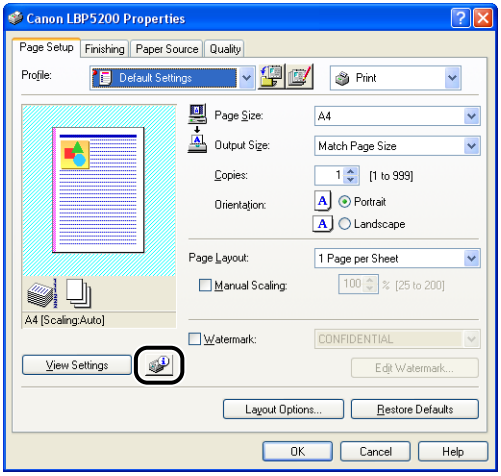

The Printer Status Window appears.

11 Select [Register Paper Size] from the [Options] menu in the Printer Status Window.

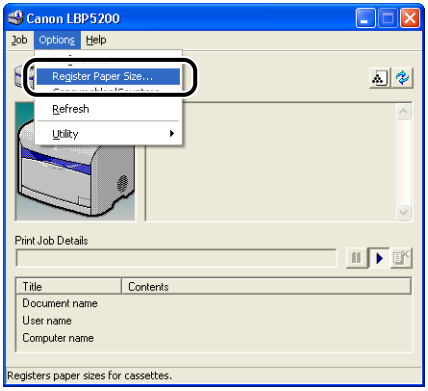

The [Register Paper Size] dialog box will appear.

12 From [Cassette 1], select the size of paper loaded in the paper cassette, then click [OK].

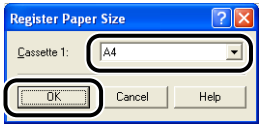

Setting Up the Printing Environment

3

CHAPTER

This chapter describes the procedure for installing the printer driver in a computer and the settings for using the printer in a network environment.

Introduction 3-2

After Installing the Printer 3-2

Each Time You Print 3-2

System Requirements 3-3

Installing the CAPT Software 3-5

For Windows 98/Me 3-6

For Windows 2000 3-21

For Windows XP/Server 2003 3-37

After Completing Installation 3-53

Printing a Test Page 3-55

Printing from a Network Computer using a Shared Printer 3-58

Configuring the Print Server 3-60

Installing the Client 3-70

Uninstalling the CAPT Software 3-81

Introduction

After Installing the Printer

The following tasks need to be performed after you have set up the printer:

■ Installing the printer driver

The printer driver is a piece of software that is needed when you are printing from application software. Settings related to printing can be configured using the printer driver. The procedure for installing the printer driver varies depending on your environment.

- If you are printing with the printer connected to the computer using a USB cable (See p. 3-5)
- If you have installed the optional network board and the computer is connected to the printer over a LAN, refer to the user manual supplied with your network operating system and the user manual supplied with the AXIS 1611 for details about printing.

■ Using a computer to share the printer on a network (See p. 3-58)

If the printer is shared over a network from one computer and you want to use it from other computers on the network, you first need to configure the computer settings and install the printer driver on the client computers.

Each Time You Print

The following tasks need to be performed each time you print:

■ Specifying print settings

The printer paper size, original document size, number of copies, etc. are configured using the printer driver. If these settings are not configured correctly, you will not be able to achieve the expected results.

■ Printing

Select the printing option from the menu of the application software you are using. As the method for printing varies depending on the application, refer to the individual users manuals of each application.

System Requirements

Your operating environment needs to meet the following requirements for you to use the printer driver:

■ Operating system

- Microsoft Windows 98
- Microsoft Windows Me
- Microsoft Windows 2000 Server/Professional
- Microsoft Windows XP Professional/Home Edition
- Microsoft Windows Server 2003 (32-bit processor version only)

- Operating Environment

	Windows 98/Me	Windows 2000/XP/Server 2003
CPU	Pentium 300MHz or higher	Pentium 300MHz or higher
Memory (RAM)*	64MB or more	Windows 2000: 64MB or more Windows XP/Server 2003: 128MB or more
Hard Disk	20MB or more	15MB or more

(PC/AT Compatibles)

* As the actual amount of memory that is available for use differs depending on the configuration of your computer system and the application you are using, printing cannot be guaranteed in all cases in the above environments.

- Recommended Environment

	Windows 98/Me	Windows 2000/XP/Server 2003
CPU	Pentium III 600MHz or higher	Pentium III 600MHz or higher
Memory (RAM)	64MB or more	Windows 2000: 128MB or more Windows XP/Server 2003: 256MB or more

■ Interface

When connecting via USB

- Windows 98/Me: USB Full-Speed (USB1.1 equivalent)
- Windows 2000/XP/Server 2003: USB 2.0 Hi-Speed/USB Full-Speed (USB1.1 equivalent)

When connecting via a network (Requires the optional network board)

- Connector: 10BASE-T or 100BASE-TX
- Protocol: TCP/IP, NetBIOS/NetBEUI (Windows XP/Server 2003 only supports TCP/IP)

NOTE

- If you want to use the sounds from the printer driver, a PC synthesizer (and the PCM synthesizer driver) needs to be installed in your computer. Do not use the PC speaker driver (speaker.drv).

- This printer use bidirectional communication. Operation of the printer when connected via unidirectional communication equipment has not been tested, and as a result, Canon cannot guarantee printer operation when the printer is connected using unidirectional print servers, USB hubs and switching devices.

Installing the CAPT Software

This section describes the procedure for installing the CAPT software on a computer that is directly connected to the printer using a USB cable.

- For Windows 98/Me (See p. 3-6)
- For Windows 2000 (See p. 3-21)
- For Windows XP/Server 2003 (See p. 3-37)

IMPORTANT

- The CAPT software is required for printing using this printer. Make sure that you install it.
- If there is not enough free space remaining on the hard disk, the following dialog will appear during the installation. Click the [OK] button to quit the installation and create more space on the disk before beginning the installation again.

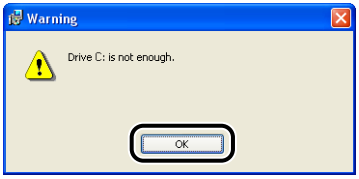

NOTE

- For details on the procedure for installing this software when the optional network board is installed in the printer and the computer is connected to the printer over a LAN, refer to the users manual supplied with the AXIS 1611.
- For details on the procedure for installing this software when the printer is shared on the network from one computer and you are printing from another computer over the network, see "Printing from a Network Computer using a Shared Printer," on p. 3-58.
- A USB cable is not supplied with the printer. Obtain a USB cable that matches the computer you are using.

For Windows 98/Me

The example screen shots shown in this section are from Windows Me.

Installing from CD-ROM Setup

1 Make sure that the printer is turned off and that the computer and printer are not connected with a USB cable.

IMPORTANT

- At some point during the installation procedure (step 10 → p. 3-8) you will need to connect the USB cable and turn the printer on.
- If the Plug and Play automatic setup wizard appears, click [Cancel] and install the CAPT software using this procedure.

2 Turn the computer on and start up Windows 98/Me.

3 Insert the supplied "LBP5200 User Software" CD-ROM into the CD-ROM drive.

If the CD-ROM is already in the drive, eject the disk and re-insert it into the drive.

CD-ROM Setup starts automatically.

IMPORTANT

If the CD-ROM Setup program does not start automatically, select [Run] from the [Start] menu, enter "D:\English\CNAC3MNU.exe", and click the [OK] button. (In this case the CD-ROM drive is assumed to be assigned to "D:". The actual CD-ROM drive letter may be different depending on the computer you are using.)

4 Click [Install].

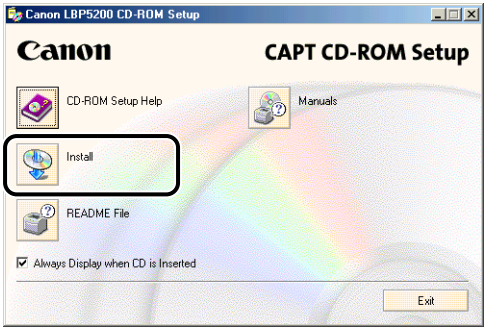

A dialog box is displayed to confirm the language.

5 Check that the language is correct and click [Yes].

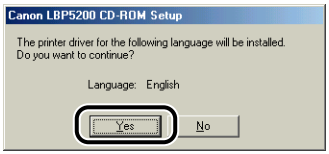

After the preparation for installation is complete, the CAPT (Canon Advanced Printing Technology) software installer starts up, and the [Setup Wizard] dialog box appears.

6 Click [Next].

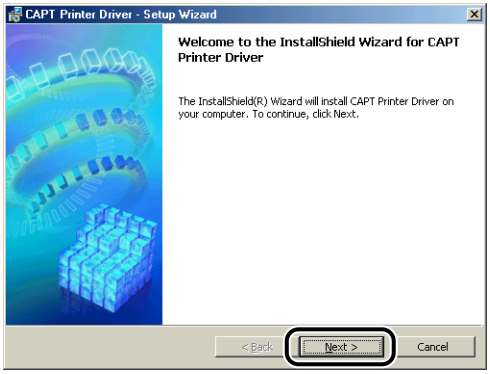

The [License Agreement] dialog box is displayed.

7 Confirm the contents and select [I accept the terms in the license agreement], and then click [Next].

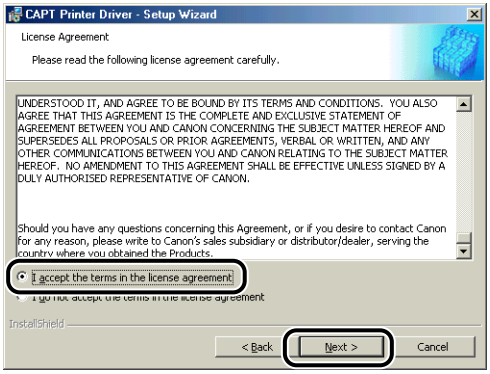

8 Select the [Install Printer Driver through a USB Connection] checkbox, then click [Next].

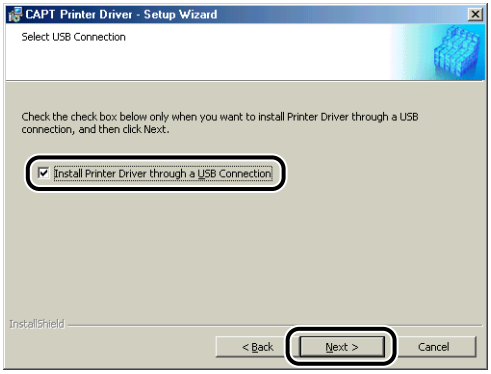

Depending on your system, a message may appear prompting you to restart your computer. If this happens, restart the computer before continuing with the installation.

9 The message [Unable to cancel setup after setup is started. Are you sure you want to start setup now?] is displayed. Click [Yes].

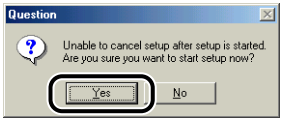

10 When the following window is displayed, connect the printer to the computer with the USB cable and turn the printer on.

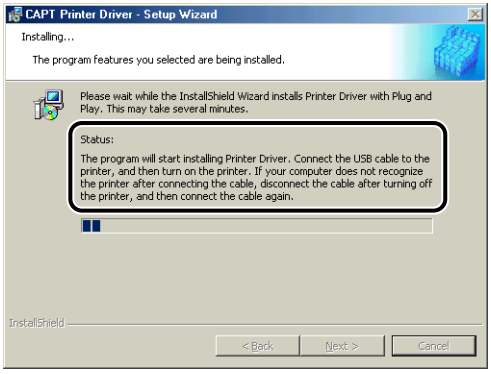

Connect the printer to the computer using the USB cable.

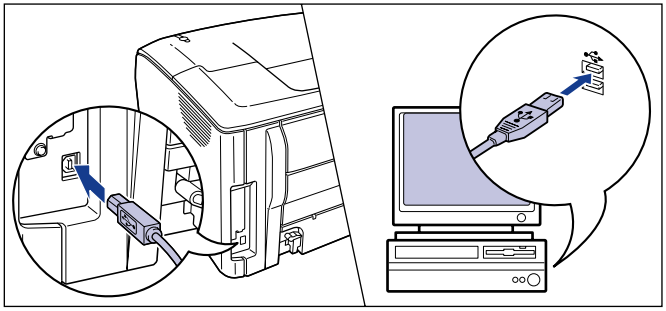

Press the power switch to turn the printer on.

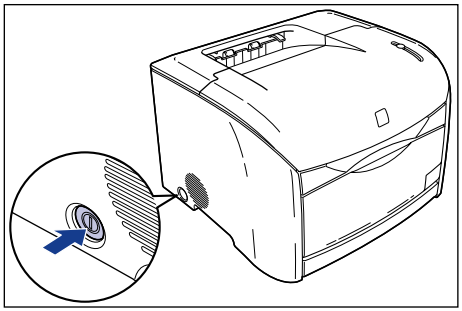

Installation of the USB class driver and the printer driver starts automatically.

NOTE

If the computer does not automatically recognize the printer after you connect the USB cable, refer to "Installation Problems," on p. 7-41.

11 Once the installation complete screen is displayed, select [Yes, I want to restart my computer now.] and click the [Exit] button.

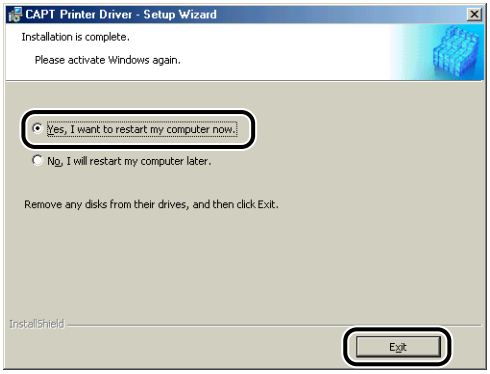

Windows will restart.

This completes the installation of the USB class driver and printer driver.

Installing with Plug and Play

IMPORTANT

Before using Plug and Play to install the CAPT software, make sure that the printer is properly connected to the computer and that the printer is turned on.

1 Turn the computer on and start up Windows 98/Me.

The [Add New Hardware Wizard] dialog box appears.

● **For Windows Me**

If the following dialog box appears, proceed to Step 2.

If the following dialog box appears, proceed to Step 9.

● **For Windows 98**

If the following dialog box appears, click [Next], then proceed to Step 2.

If the following dialog box appears, click [Next], then proceed to Step 9.

2 Select [Specify the location of the driver (Advanced)], then click [Next].

For Windows 98: Select [Search for the best driver for your device. (Recommended)], then click [Next].

A dialog box is displayed that allows you to specify the places to search.

3 Insert the supplied "LBP5200 User Software" CD-ROM into the CD-ROM drive.

If CD-ROM Setup appears, click [Exit].

4 Select [Search for the best driver for your device. (Recommended).] and clear the checkmark next to [Removable Media (Floppy, CD-ROM...)], then select [Specify a location].

For Windows 98: Clear the checkmarks from [Floppy disk drives] and [CD-ROM drive], then select [Specify a location].

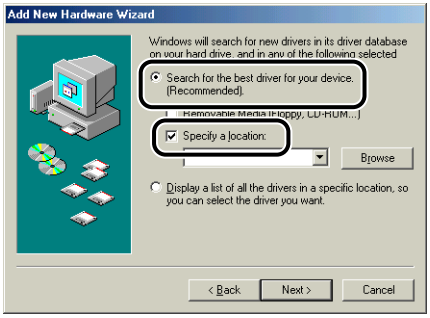

5 Click [Browse], then select a folder.

For Windows Me: Select [D:\English\USBPORT\WinMe], and then click [OK].

For Windows 98: Select [D:\English\USBPORT\Win98], and then click [OK].
In this case the CD-ROM drive is assumed to be assigned to "D:" The actual CD-ROM drive letter may be different depending on the computer you are using.

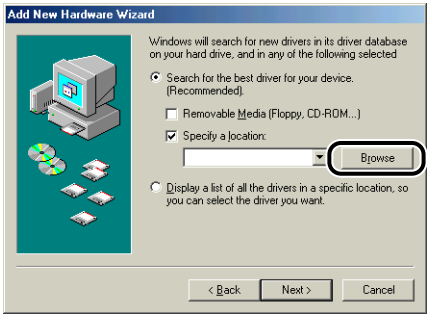

6 Make sure that the correct path is shown in the [Specify a location] field, and then click [Next].

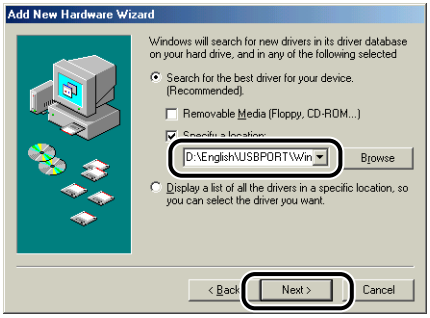

7 Click [Next].

Installation of the USB class driver starts.

8 Click [Finish]

The computer automatically detects the printer. Please wait a moment.

The [Add New Hardware Wizard] dialog box is displayed. For Windows 98, click [Next].

9 Select [Specify the location of the driver (Advanced)], then click [Next].

For Windows 98: Select [Search for the best driver for your device. (Recommended)], then click [Next].

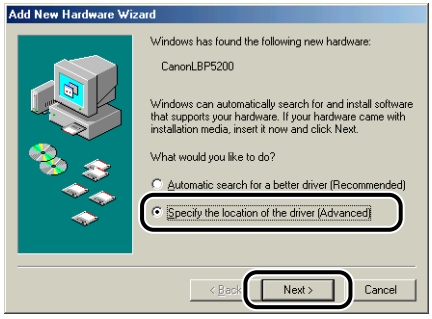

A dialog box is displayed that allows you to specify the places to search.

10 If the supplied "LBP5200 User Software" CD-ROM is not in the CD-ROM drive, insert the "LBP5200 User Software" CD-ROM into the drive.

If CD-ROM Setup appears, click [Exit].

11 Select [Search for the best driver for your device. (Recommended).] and clear the checkmark next to [Removable Media (Floppy, CD-ROM...)], then select [Specify a location].

For Windows 98: Clear the checkmarks from [Floppy disk drives] and [CD-ROM drive], then select [Specify a location].

12 Click [Browse], then select a folder.

Select [D:\English\Win98_Me], and then click [OK].
In this case the CD-ROM drive is assumed to be assigned to "D:". The actual CD-ROM drive letter may be different depending on the computer you are using.

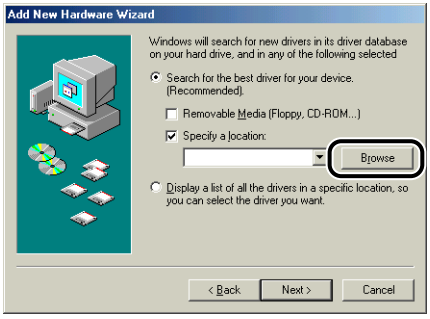

13 Make sure that the correct path is shown in the [Specify a location] field, and then click [Next].

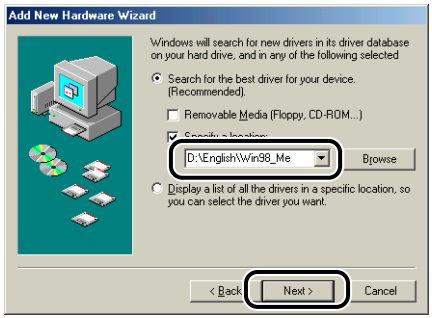

14 Click [Next].

15 Enter a new name in the [Printer name] field if you want to change the name of the printer.

If another printer driver has already been installed on the computer, the message [Do you want your Windows-based programs to use this printer as the default printer?] will appear. In this case, select either [Yes] or [No].

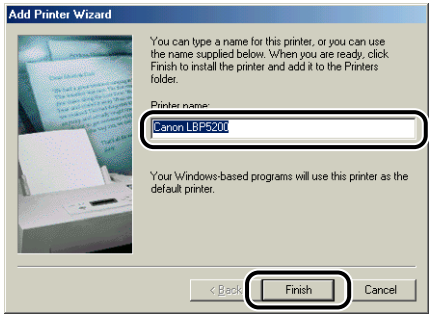

16 Click [Finish].

Windows will begin copying files.

17 Once the installation complete dialog is displayed, click [OK].

18 Click [Finish].

This completes the installation of the USB class driver and printer driver.

Installing using the [Add Printer Wizard]

NOTE

When installing the CAPT software using the [Add Printer Wizard], the USB port that you connect the printer to needs to have been setup previously.

1 On the [Start] menu, select [Settings] and then click [Printers]. The [Printers] folder will open. Double-click the [Add Printer] icon.

The [Add Printer Wizard] dialog box is displayed.

NOTE

The [Add Printer Wizard] dialog box can also be opened using the following procedure:

- Double-click [My Computer] → [Control Panel] → [Printers] → [Add Printer] (Windows Me only).
- Double-click [My Computer] → [Printers] → [Add Printer] (Windows 98 only).

2 Click [Next].

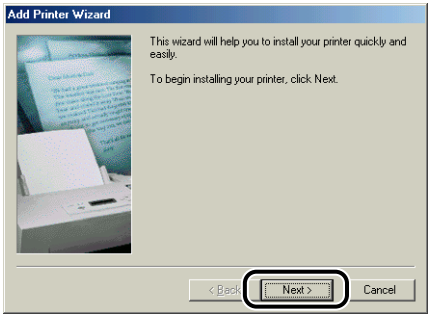

3 Select [Local printer] and then click [Next].

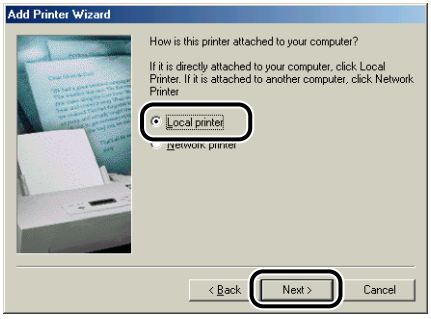

NOTE

This window is not displayed if the network has not been configured.

4 Click [Have Disk].

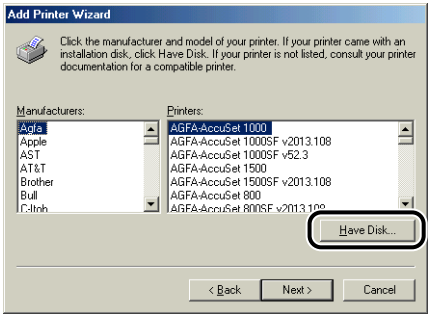

5 Insert the supplied "LBP5200 User Software" CD-ROM into the CD-ROM drive, then click [Browse].

If CD-ROM Setup appears, click [Exit].

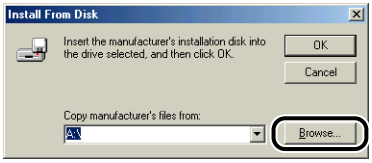

6 Select [D:\English\Win98_Me], and then click [OK].

In this case the CD-ROM drive is assumed to be assigned to "D:". The actual CD-ROM drive letter may be different depending on the computer you are using.

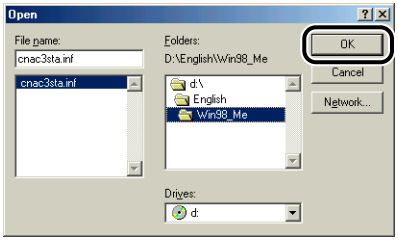

7 Confirm the path shown in the [Copy manufacturer's files from] field, then click [OK].

For example, [D:\English\Win98_Me] is displayed when the CD-ROM drive is drive [D:].

"Canon LBP5200" is displayed in the [Add Printer Wizard] dialog box.

8 Select this printer from the [Printers] list, then click [Next].

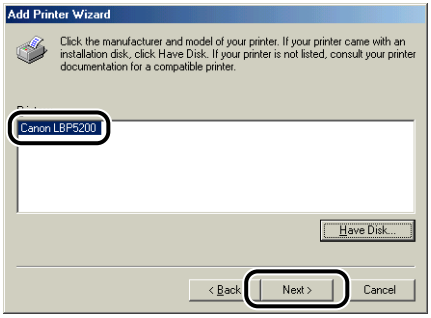

9 Select the USB port that you will connect the printer to, and then click [Next].

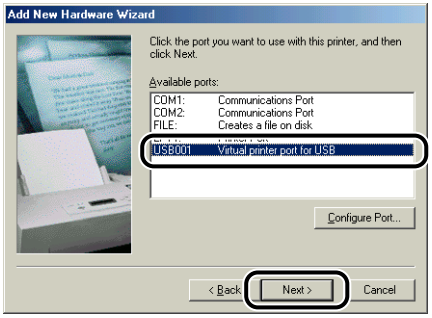

10 Enter a new name in the [Printer name] field if you want to change the name of the printer.

If another printer driver has already been installed on the computer, the message [Do you want your Windows-based programs to use this printer as the default printer?] will appear. In this case, select either [Yes] or [No].

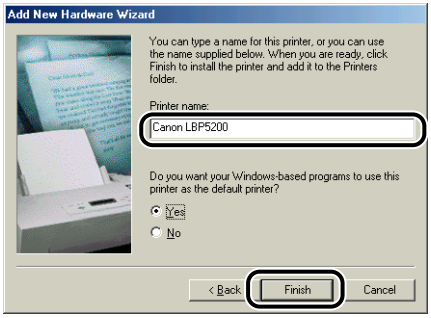

11 Click [Finish].

Windows will begin copying files.

12 Once the installation complete dialog is displayed, click [OK].

13 If the printer is not connected to the computer, connect it using a USB cable and turn the printer on.

This completes the installation of the printer driver.

For Windows 2000

Installing from CD-ROM Setup

1 Make sure that the printer is turned off and that the computer and printer are not connected by a USB cable.

IMPORTANT

- At some point during the installation procedure (step 11 → p. 3-24) you will need to connect the USB cable and turn the printer on.
- If the Plug and Play automatic setup wizard appears, click [Cancel] and install the CAPT software using this procedure.

2 Turn the computer on and start up Windows 2000.

3 Log on as a user who is a member of the Administrators group.

NOTE

Full Control Permission is required for the installation of the printer driver.

4 Insert the supplied "LBP5200 User Software" CD-ROM into the CD-ROM drive.

If the CD-ROM is already in the drive, eject the disk and re-insert it into the drive.

CD-ROM Setup starts automatically.

IMPORTANT

If the CD-ROM Setup program does not start automatically, select [Run] from the [Start] menu, enter "D:\English\CNAC3MNU.exe", and click the [OK] button. (In this case the CD-ROM drive is assumed to be assigned to "D:". The actual CD-ROM drive letter may be different depending on the computer you are using.)

5 Click [Install].

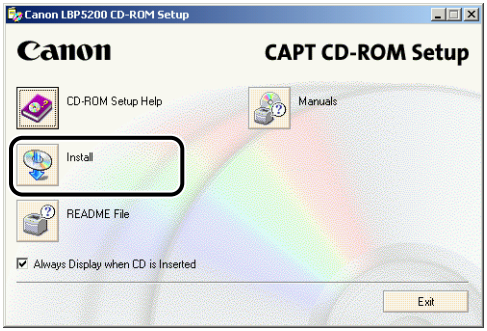

A dialog box is displayed to confirm the language.

6 Check that the language is correct and click [Yes].

After the preparation for installation is complete, the CAPT (Canon Advanced Printing Technology) software installer starts up, and the [Setup Wizard] dialog box appears.

7 Click [Next].

The [License Agreement] dialog box is displayed.

8 Confirm the contents and select [I accept the terms in the license agreement], and then click [Next].

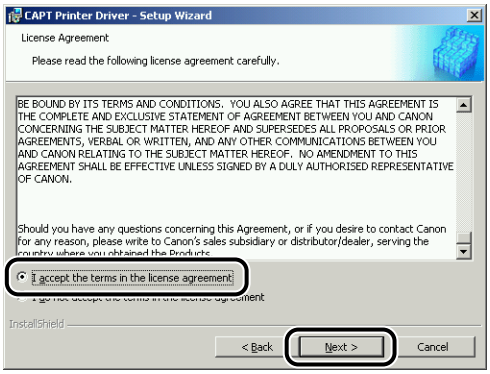

9 **Select the [Install Printer Driver through a USB Connection] checkbox, then click [Next].**

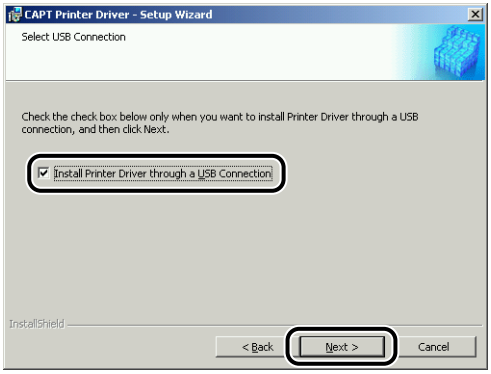

10 **The message [Unable to cancel setup after setup is started. Are you sure you want to start setup now?] is displayed. Click [Yes].**

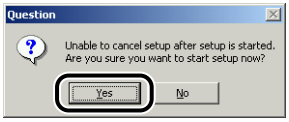

11 **When the following window is displayed, connect the printer to the computer with the USB cable and turn the printer on.**

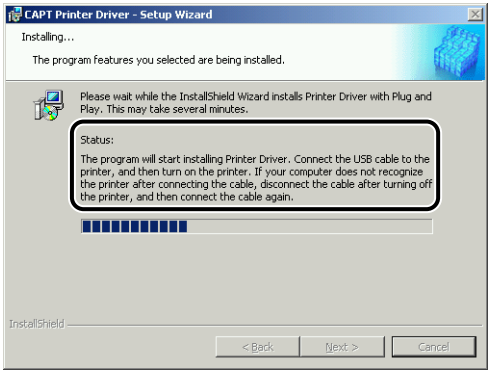

Connect the printer to the computer using the USB cable.

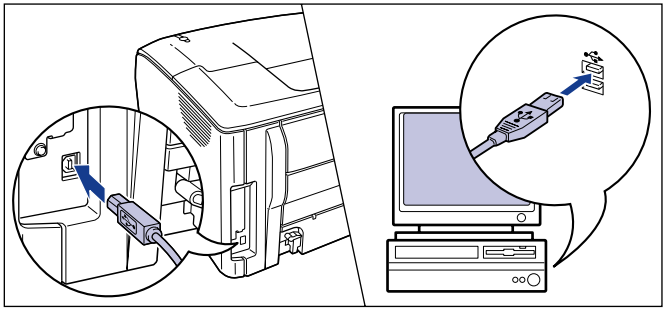

Press the power switch to turn the printer on.

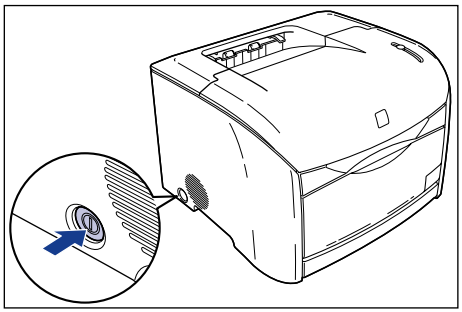

Installation of the USB class driver (supplied with OS) and the printer driver starts automatically.

NOTE

If the computer does not automatically recognize the printer after you connect the USB cable, refer to "Installation Problems," on p. 7-41.

12 **Once the installation complete screen is displayed, select [Yes, I want to restart my computer now.] and click the [Exit] button.**

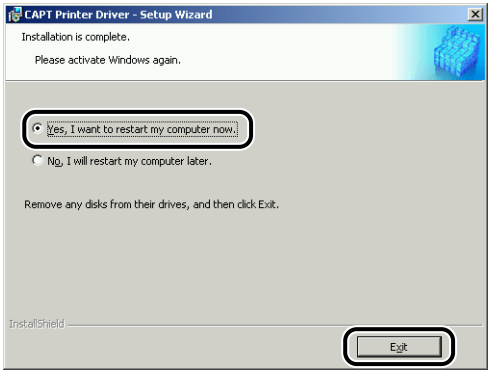

Windows will restart.

This completes the installation of the USB class driver (supplied with OS) and printer driver.

Installing with Plug and Play

IMPORTANT

Before using Plug and Play to install the CAPT software, make sure that the printer is properly connected to the computer and that the printer is turned on.

1 **Turn the computer on and start up Windows 2000.**

2 **Log on as a user who is a member of the Administrators group.**

NOTE

Full Control Permission is required for the installation of the printer driver.

3 Click [Next].

4 Select [Search for a suitable driver for my device (recommended)], then click [Next].

NOTE

[Unknown] may be displayed as the name of the device.

5 Clear the checkmarks from [Floppy disk drives] and [CD-ROM drives], then select [Specify a location] and click [Next].

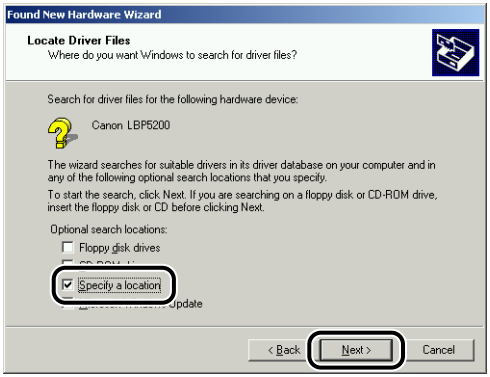

6 Insert the supplied "LBP5200 User Software" CD-ROM into the CD-ROM drive, then click [Browse].

If CD-ROM Setup appears, click [Exit].

7 Select [D:\English\Win2K_XP]. Select [CNAC3STK.INF] and click [Open].

In this case the CD-ROM drive is assumed to be assigned to "D:". The actual CD-ROM drive letter may be different depending on the computer you are using.

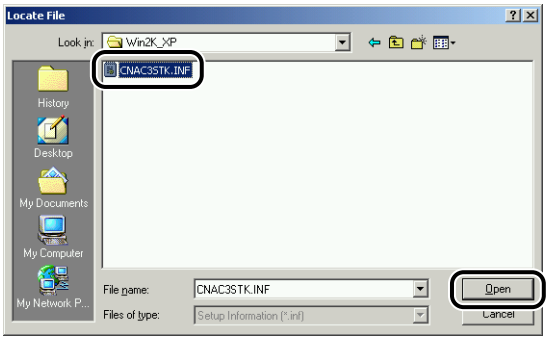

8 Make sure that the correct path is displayed in the [Copy manufacturer's files from] field, then click [OK].

A dialog box is displayed when the search for driver files is complete.

9 Click [Next].

Windows will begin copying files.
The [Completing the Found New Hardware Wizard] dialog is displayed next.

NOTE

If the [Digital Signature Not Found] dialog box appears, click [Yes].

10 Click [Finish].

This completes the installation of the USB class driver (supplied with OS) and printer driver.

Installing using the [Add Printer Wizard]

IMPORTANT

If you want to print a test page, make sure that the printer is properly connected to the computer and that the printer is turned on before installing the CAPT software.

NOTE

When installing the CAPT software using the [Add Printer Wizard], the USB port that you connect the printer to needs to have been setup previously.

1 Turn the computer on and start up Windows 2000.

2 Log on as a user who is a member of the Administrators group.

IMPORTANT

If the Plug and Play automatic setup wizard appears, click [Cancel] and install the CAPT software using this procedure.

NOTE

Full Control Permission is required for the installation of the printer driver.

3 On the [Start] menu, select [Settings] and then click [Printers]. The [Printers] folder will open. Double-click the [Add Printer] icon.

The [Add Printer Wizard] dialog box is displayed.

NOTE

The [Add Printer Wizard] dialog box can also be opened by double-clicking [My Computer] → [Control Panel] → [Printers] → [Add Printer].

4 Click [Next].

5 Make sure that [Local printer] is selected, then click [Next].

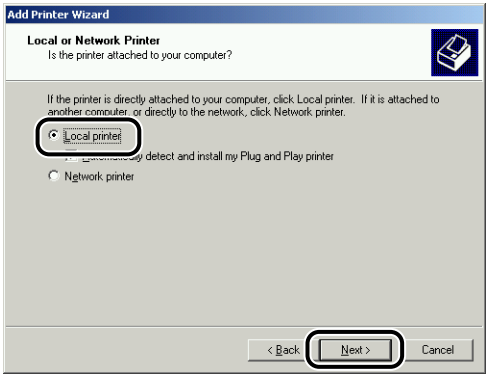

NOTE

Do not select [Automatically detect and install my Plug and Play printer].

6 Select the USB port that you will connect the printer to, and then click [Next].

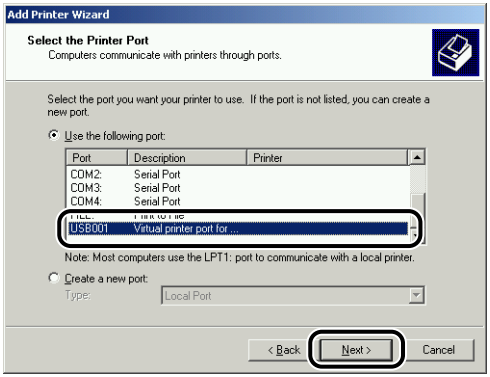

7 Click [Have Disk].

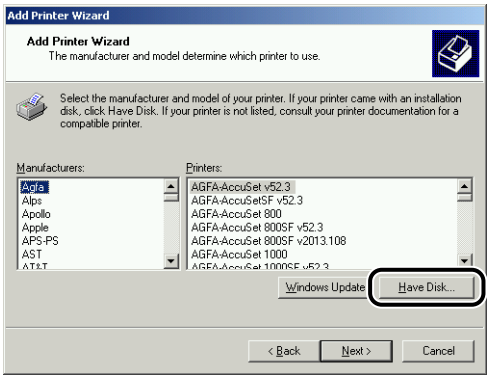

8 Insert the supplied "LBP5200 User Software" CD-ROM into the CD-ROM drive, then click [Browse].

If CD-ROM Setup appears, click [Exit].

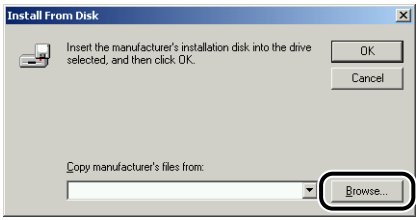

9 Select [D:\English\Win2K_XP]. Select [CNAC3STK.INF] and click [Open].

In this case the CD-ROM drive is assumed to be assigned to "D:". The actual CD-ROM drive letter may be different depending on the computer you are using.

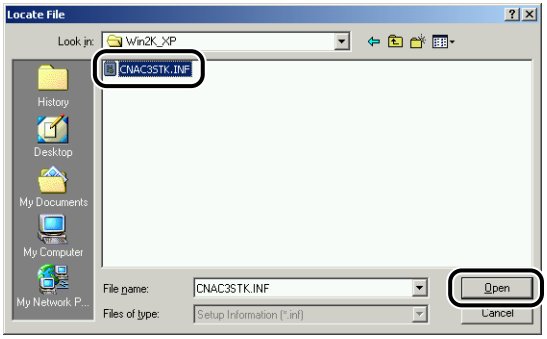

10 Confirm the path shown in the [Copy manufacturer's files from] field, then click [OK].

For example, [D:\English\Win2K_XP] is displayed when the CD-ROM drive is drive [D:].

"Canon LBP5200" is displayed in the [Add Printer Wizard] dialog box.

11 Click [Next].

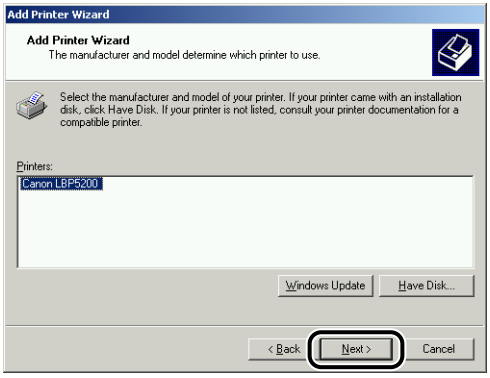

12 Enter a new name in the [Printer name] field if you want to change the name of the printer, then click [Next].

If another printer driver has already been installed on the computer, the message [Do you want your Windows-based programs to use this printer as the default printer?] appears. In this case, select either [Yes] or [No].

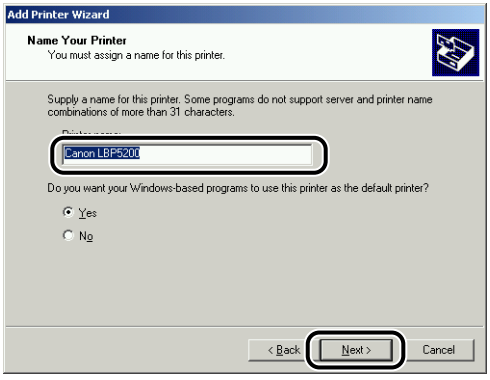

13 Click [Next].

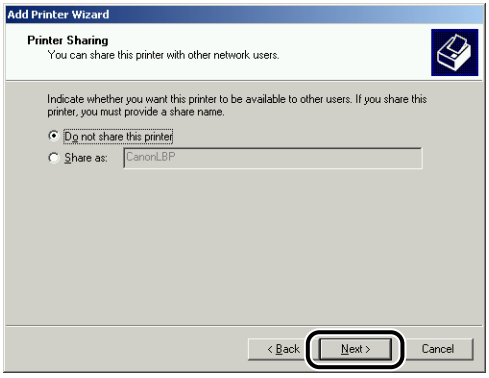

NOTE

If you want to share the printer over the network, select [Share as] and click [Next]. A screen is displayed that allows you to enter a [Location] and [Comment] for the printer. Enter this information as required and click [Next].

14 If you want to print a test page, select [Yes], then click [Next].

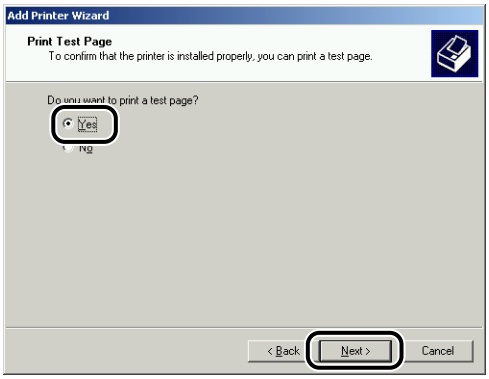

15 Click [Finish].

Windows will begin copying files.

If you chose to print a test page, a dialog box is displayed after the page finishes printing. Click [OK] to close the dialog box.

NOTE

If the [Digital Signature Not Found] dialog box appears, click [Yes].

16 If the printer is not connected to the computer, connect it using a USB cable and turn the printer on.

This completes the installation of the printer driver.

For Windows XP/Server 2003

The screen shots shown in this section are taken from Windows XP.

Installing from CD-ROM Setup

1 Make sure that the printer is turned off and that the computer and printer are not connected by a USB cable.

IMPORTANT

- At some point during the installation procedure (step 11 → p. 3-40) you will need to connect the USB cable and turn the printer on.
- If the Plug and Play automatic setup wizard appears, click [Cancel] and install the CAPT software using this procedure.

2 Turn the computer on and start up Windows XP/Server 2003.

3 Log on as a user who is a member of the Administrators group.

NOTE

Full Control Permission is required for the installation of the printer driver.

4 Insert the supplied "LBP5200 User Software" CD-ROM into the CD-ROM drive.

If the CD-ROM is already in the drive, eject the disk and re-insert it into the drive.

CD-ROM Setup appears automatically.

IMPORTANT

If the CD-ROM Setup program does not start automatically, select [Run] from the [Start] menu, enter "D:\English\CNAC3MNU.exe", and click the [OK] button. (In this case the CD-ROM drive is assumed to be assigned to "D:". The actual CD-ROM drive letter may be different depending on the computer you are using.)

5 Click [Install].

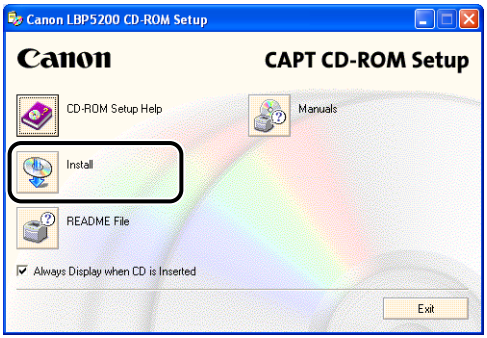

A dialog box is displayed to confirm the language.

6 Check that the language is correct and click [Yes].

After the preparation for installation is complete, the CAPT (Canon Advanced Printing Technology) software installer starts up, and the [Setup Wizard] dialog box is displayed.

7 Click [Next].

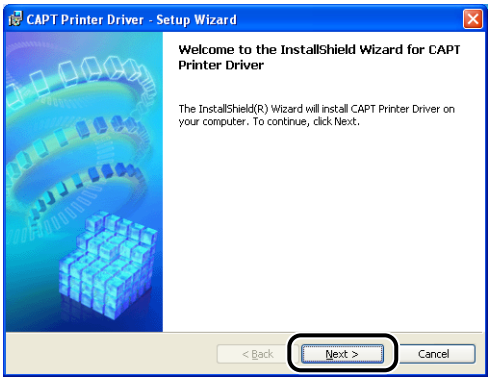

The [License Agreement] dialog box is displayed.

8 Check the contents of the agreement and select [I accept the terms in the license agreement], and then click [Next].

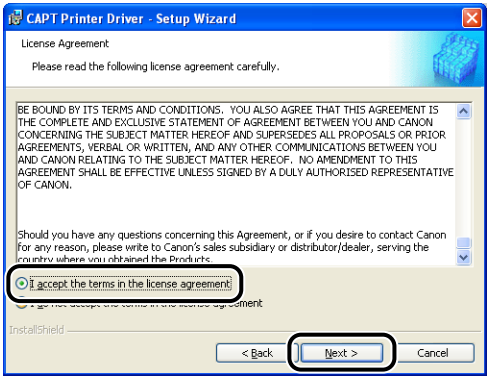

9 Select [Install Printer Driver through a USB Connection], then click [Next].

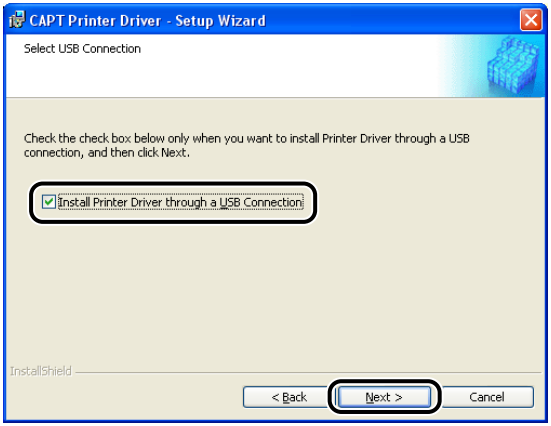

If you are using an operating system equipped with Windows Firewall, such as Windows XP Service Pack 2, the following window is displayed. Click [Yes] or [No].

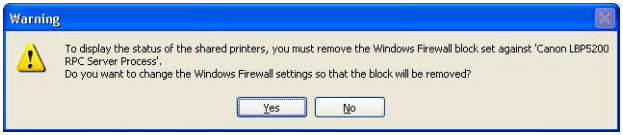

Click [Yes] to configure Windows Firewall to unblock communication with client computers. Select this option if the computer you are currently installing is a print server.

Click [No] to configure Windows Firewall to block communications with client computers.

10 The message [Unable to cancel setup after setup is started. Are you sure you want to start setup now?] is displayed. Click [Yes].

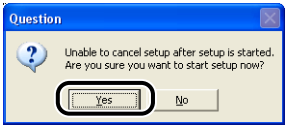

NOTE

If the [Software Installation] dialog box appears, click [Continue Anyway].

11 When the following window is displayed, connect the printer to the computer with the USB cable and turn the printer on.

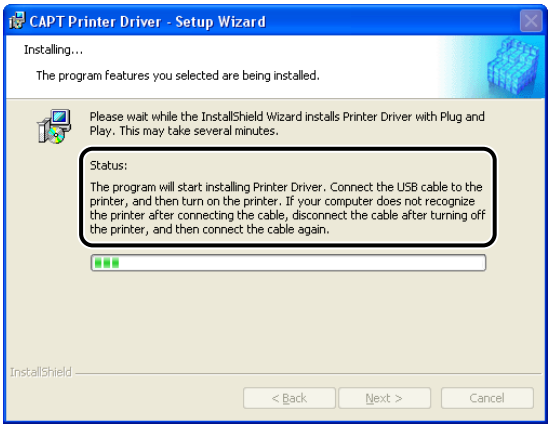

Connect the printer to the computer using the USB cable.

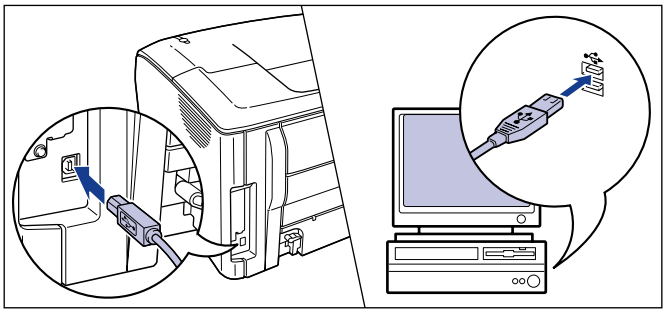

Press the power switch to turn the printer on.

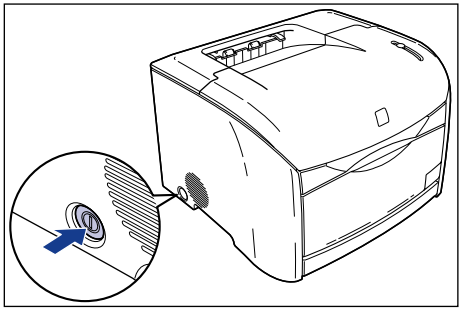

Installation of the USB class driver (supplied with OS) and the printer driver starts automatically.

NOTE

- If the computer does not automatically recognize the printer after you connect the USB cable, refer to "Installation Problems," on p. 7-41.
- If the [Hardware Installation] dialog box appears, click [Continue Anyway].

12 Once the installation complete screen is displayed, select [Yes, I want to restart my computer now.] and click the [Exit] button.

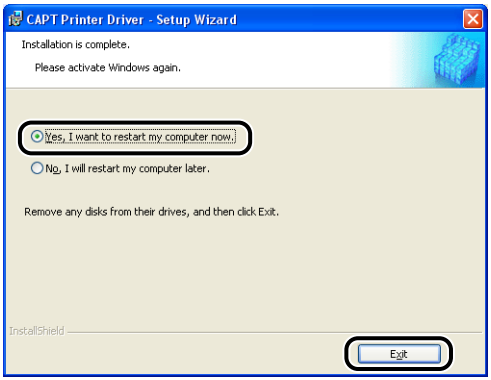

Windows restarts.

This completes the installation of the USB class driver (supplied with OS) and printer driver.

Installing with Plug and Play

IMPORTANT

Before using Plug and Play to install the CAPT software, make sure that the printer is properly connected to the computer and that the printer is turned on.

1 **Turn the computer on and start up Windows XP/Server 2003.**

2 **Log on as a user who is a member of the Administrators group.**

NOTE

Full Control Permission is required for the installation of the printer driver.

3 **Insert the "LBP5200 User Software" CD-ROM into the CD-ROM drive. Select [Install from a list or specific location (Advanced)], then click [Next].**

If CD-ROM Setup appears, click [Exit].

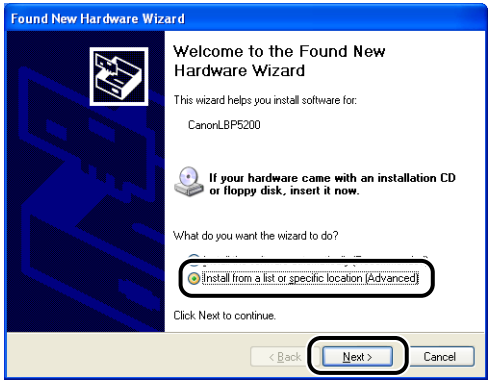

4 Select [Search for the best driver in these locations.] and clear the checkmark from [Search removable media (floppy, CD-ROM...)], then select [Include this location in the search].

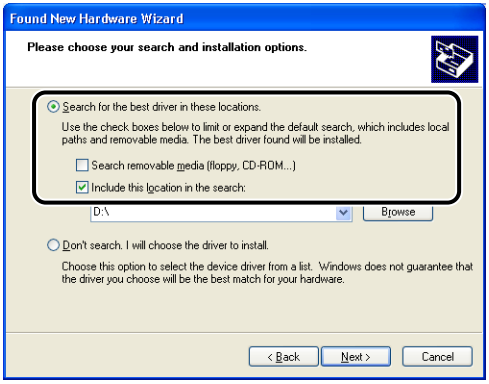

5 Click [Browse], then select a folder.

Select [D:\English\Win2K_XP], and then click [OK].
In this case the CD-ROM drive is assumed to be assigned to "D:". The actual CD-ROM drive letter may be different depending on the computer you are using.

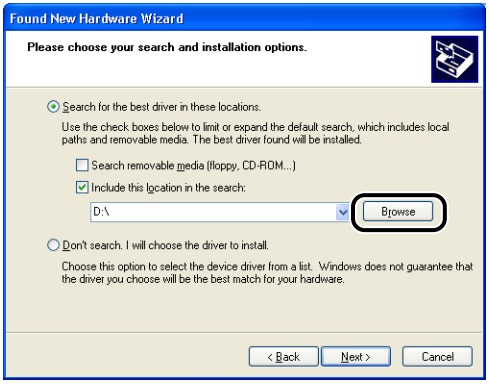

6 Make sure that the correct path is displayed in the [Include this location in the search] field, then click [Next].

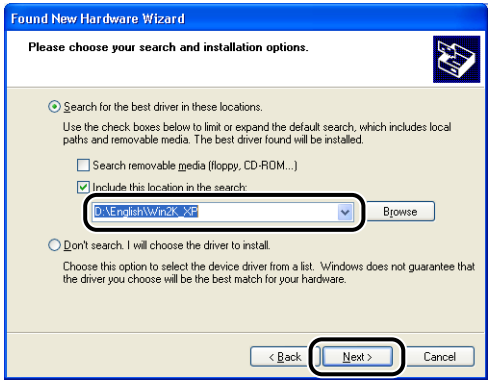

An installation in progress screen is displayed.

After this, the [Completing the Found New Hardware Wizard] dialog is displayed.

NOTE

If the [Hardware Installation] dialog box appears, click [Continue Anyway].

7 Click [Finish].

IMPORTANT

If you are using an operating system equipped with Windows Firewall, such as Windows XP Service Pack 2, as a print server, you need to configure Windows Firewall to unblock communication with the client computers. (See p. 8-14)

This completes the installation of the USB class driver (supplied with OS) and printer driver.

Installing using the [Add Printer Wizard]

IMPORTANT

If you want to print a test page, make sure that the printer is properly connected to the computer and that the printer is turned on before installing the CAPT software.

NOTE

When installing the CAPT software using the [Add Printer Wizard], the USB port that you connect the printer to needs to have been setup previously.

1 Turn the computer on and start up Windows XP/Server 2003.

IMPORTANT

If the Plug and Play automatic setup wizard appears, click [Cancel] and install the CAPT software using this procedure.

2 Log on as a user who is a member of the Administrators group.

NOTE

Full Control Permission is required for the installation of the printer driver.

3 Open the [Printers and Faxes] folder.

For Windows XP Professional/Server 2003:
Select [Printers and Faxes] from the [Start] menu.
For Windows XP Home Edition:
Select [Control Panel] from the [Start] menu, then click [Printers and Other Hardware] → [Printers and Faxes].

4 Click [Add a printer].

For Windows Server 2003: Double-click [Add Printer].

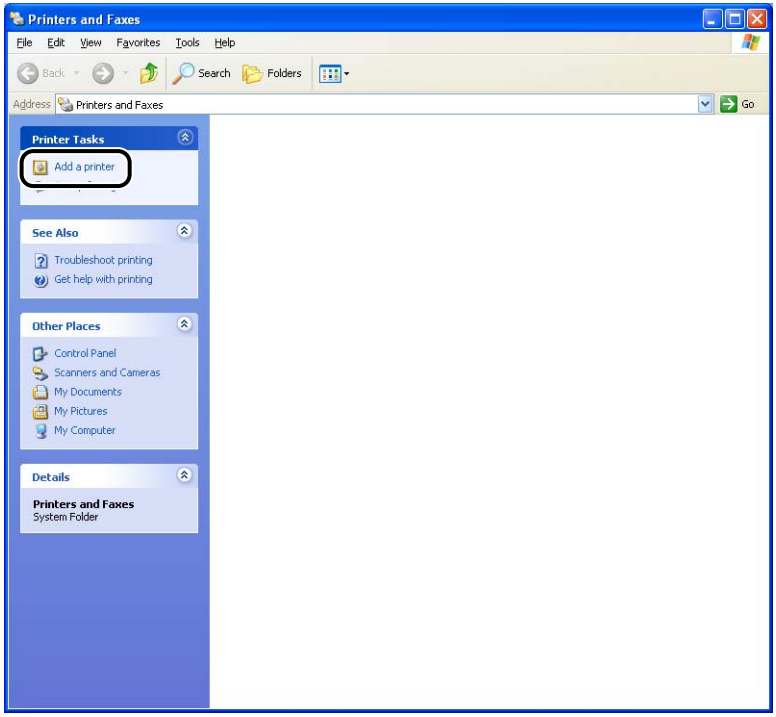

The [Add Printer Wizard] dialog box is displayed.

5 Click [Next].

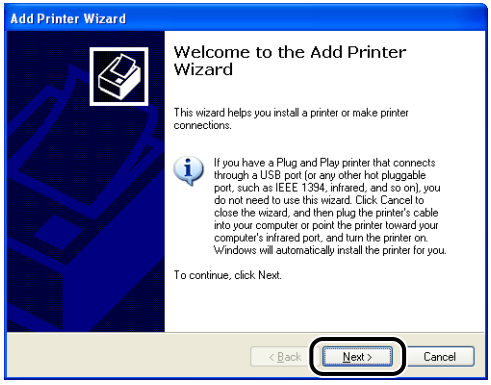

6 Make sure that [Local printer attached to this computer] is selected, then click [Next].

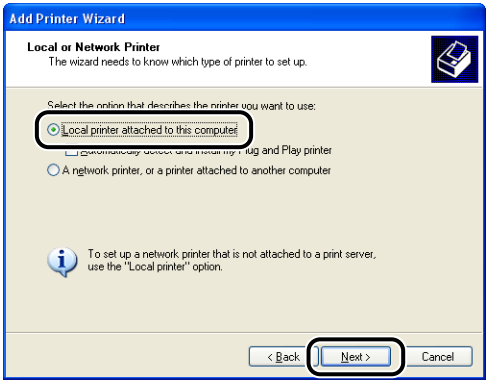

NOTE

Do not select [Automatically detect and install my Plug and Play printer].

7 Make sure that [Use the following port] is selected, then select the USB port that you will connect the printer to and click [Next].

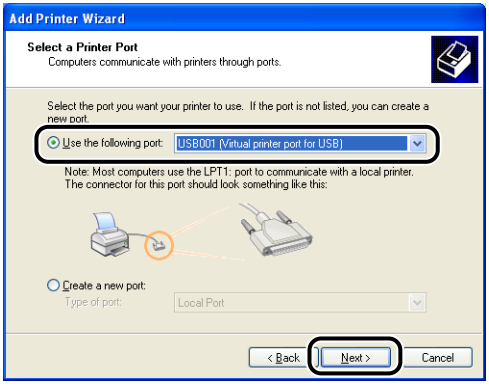

8 Click [Have Disk].

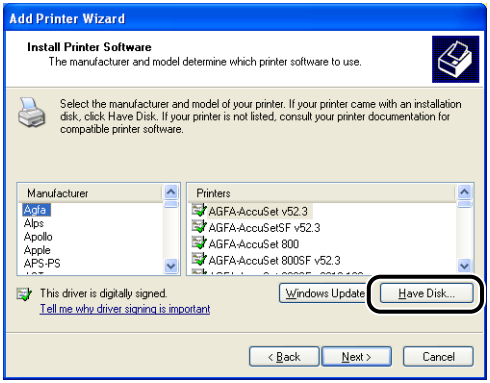

9 Insert the supplied "LBP5200 User Software" CD-ROM into the CD-ROM drive, then click [Browse].

If CD-ROM Setup appears, click [Exit].

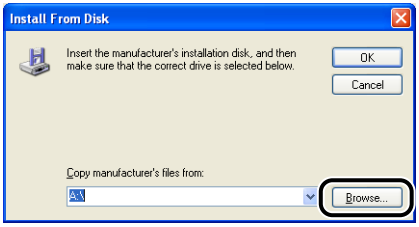

10 Select [D:\English\Win2K_XP]. Select [CNAC3STK.INF] and click [Open].

In this case the CD-ROM drive is assumed to be assigned to "D:". The actual CD-ROM drive letter may be different depending on the computer you are using.

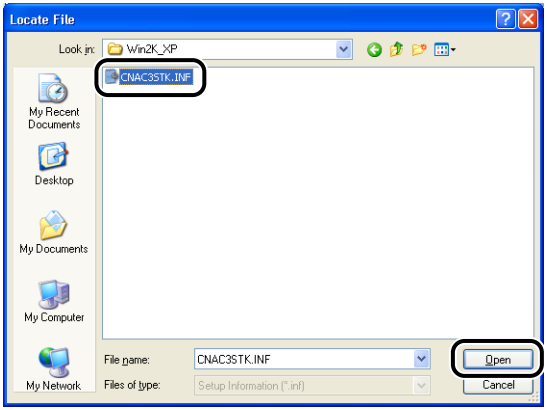

11 Confirm the path shown in the [Copy manufacturer's files from] field, then click [OK].

For example, [D:\English\Win2K_XP] is displayed when the CD-ROM drive is drive [D:].

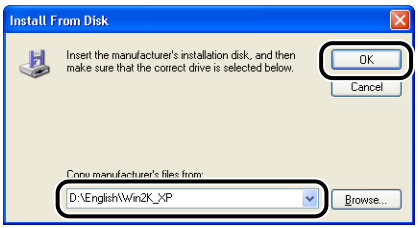

"Canon LBP5200" is displayed in the [Add Printer Wizard] dialog box.

12 Click [Next].

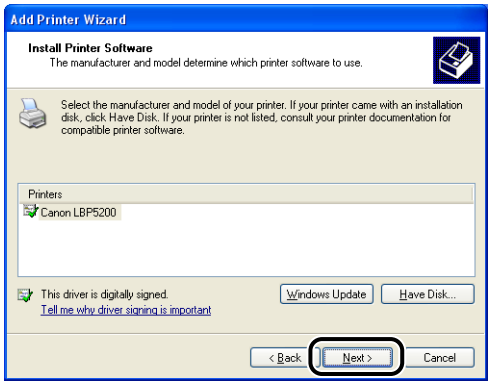

13 Enter a new name in the [Printer name] field if you want to change the name of the printer, then click [Next].

If another printer driver has already been installed in the computer, the message "Do you want your Windows-based programs to use this printer as the default printer?" appears. In this case, select [Yes] or [No].

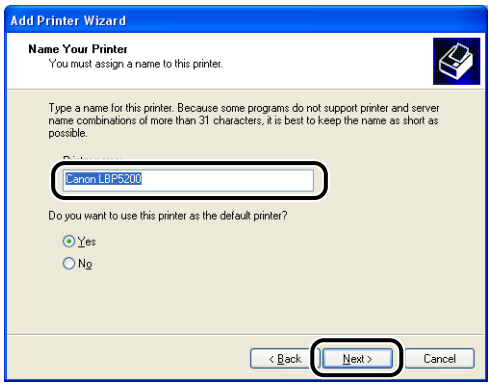

14 Click [Next].

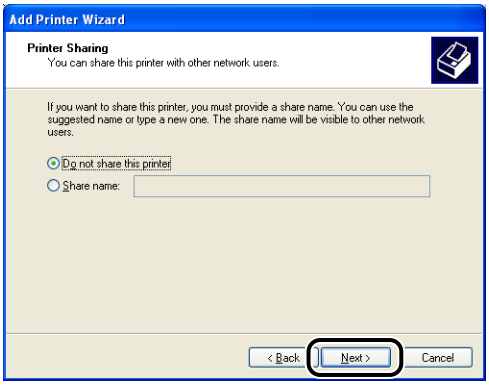

NOTE

If you want to share the printer over the network, select [Share name] and click [Next]. A screen is displayed that allows you to enter a [Location] and [Comment] for the printer. Enter this information as required and click [Next].

15 If you want to print a test page, select [Yes], then click [Next].

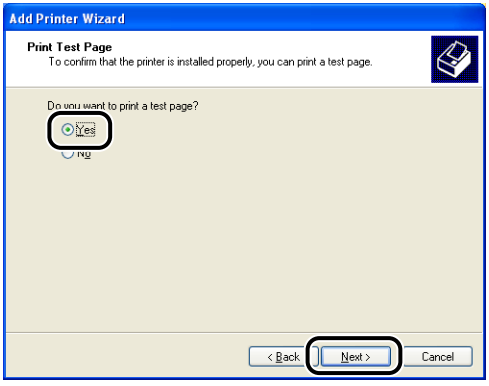

16 Click [Finish].

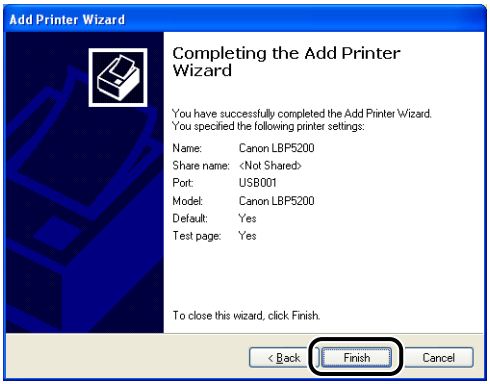

Windows will begin copying files.

If you chose to print a test page, a dialog box is displayed after the page finishes printing. Click [OK] to close the dialog box.

NOTE

If the [Hardware Installation] dialog box appears, click [Continue Anyway].

17 If the printer is not connected to the computer, connect it using a USB cable and turn the printer on.

IMPORTANT

If you are using an operating system equipped with Windows Firewall, such as Windows XP Service Pack 2, as a print server, you need to configure Windows Firewall to unblock communication with the client computers. (See p. 8-14)

This completes the installation of the printer driver.

After Completing Installation

When the installation of the CAPT software is complete, an icon and folder will be created for the printer.

■ For Windows 98/Me/2000

- The icon for the printer is displayed in the [Printers] folder.
- [Canon Printer Uninstaller] is added to [Programs] under the [Start] menu.

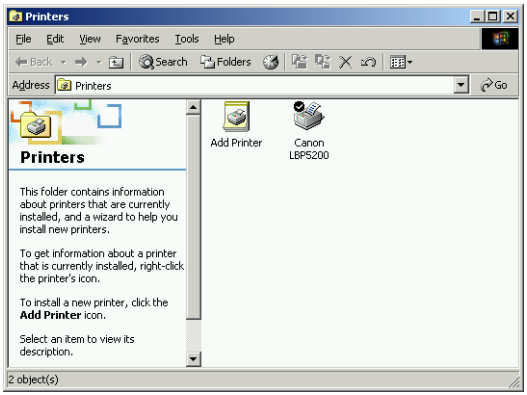

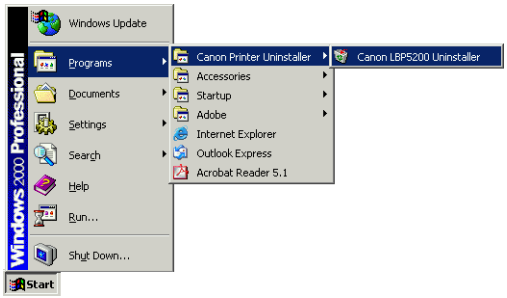

■ For Windows XP/Server 2003

- The icon for the printer is displayed in the [Printers and Faxes] folder.
- [Canon Printer Uninstaller] is added to [All Programs] under the [Start] menu.

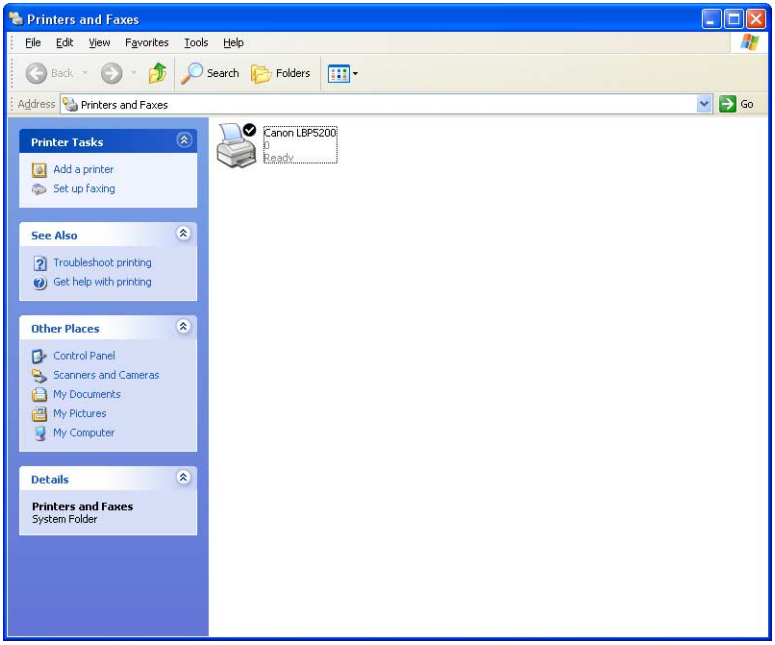

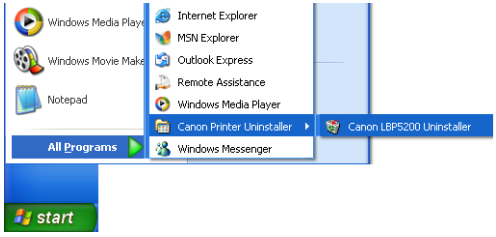

Printing a Test Page

Before using the printer for the first time, be sure to print a test page using the following procedure.

NOTE

The screen shots shown here are taken from Windows XP Professional.

1 Open the [Printers] folder or [Printers and Faxes] folder.

For Windows 98/Me/2000: Select [Settings] → [Printers] from the [Start] menu.
For Windows XP Professional/Server 2003: Select [Printers and Faxes] from the [Start] menu.
For Windows XP Home Edition: Select [Control Panel] from the [Start] menu, then click [Printers and Other Hardware] → [Printers and Faxes].

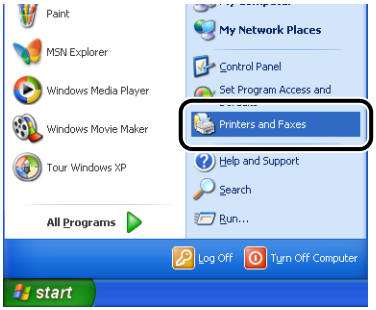

The [Printers] folder or the [Printers and Faxes] folder is displayed.

2 Select the icon for the printer, then select [Properties] from the [File] menu.

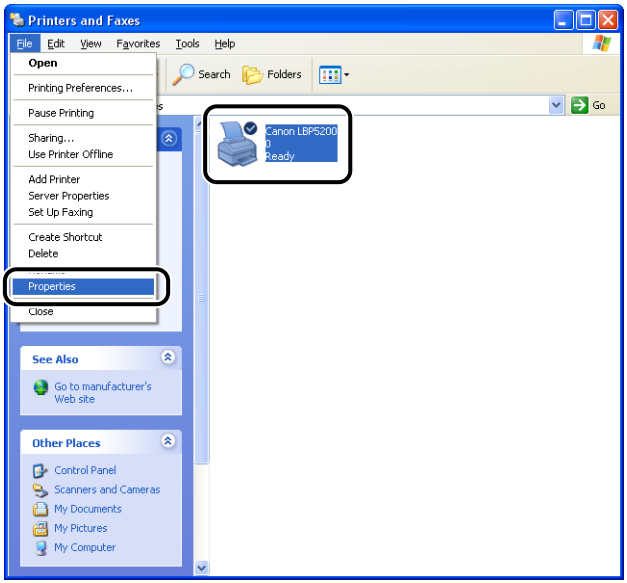

The Properties dialog box for the printer is displayed.

3 Click [Print Test Page] on the [General] sheet.

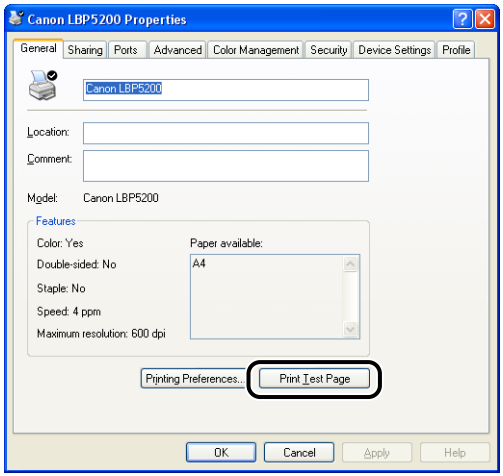

The printer will begin printing a test page.

4 If the test page printed properly, click [OK] or [Yes].

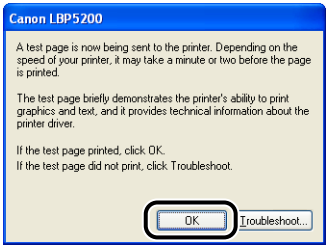

NOTE

If the test page did not printed properly, refer to Chapter 7 "Troubleshooting".

Printing from a Network Computer using a Shared Printer

If you set the printer up as a shared network printer, you will be able to print directly to the printer from any computer on the network.

If you want to use the printer as a shared printer, perform the following configuration. In this section, the computer that is directly connected to the printer is called the print server, and other computers that access the printer over the network are called client computers.

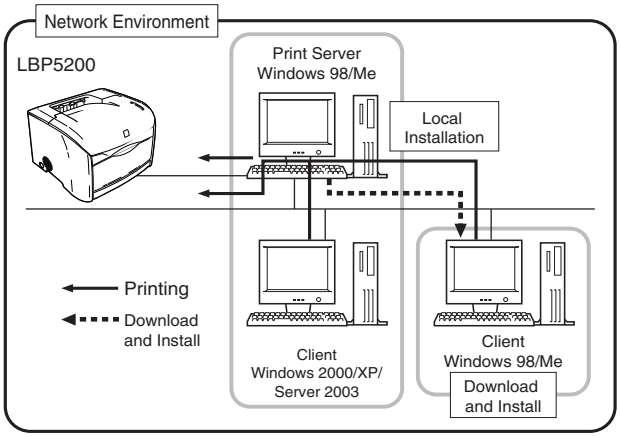

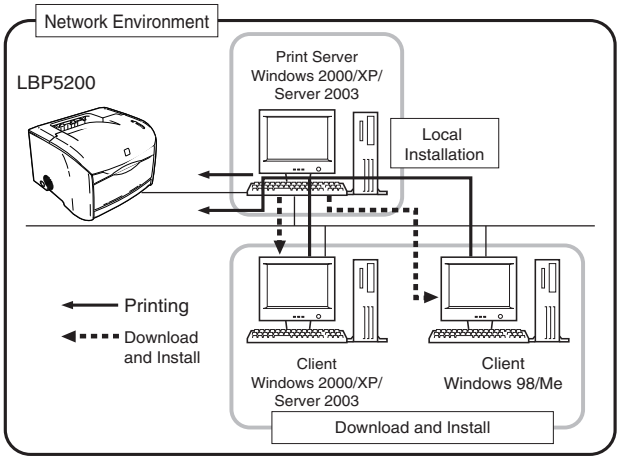

If you want to use a print server, perform the following steps.

Items to Configure		Refer to
1	**Install the printer driver on the print server**	
	• If the printer and print server are connected via a USB cable	p. 3-5
	• If the optional network card is installed, and the printer and print server are connected by a LAN cable	The instruction manual supplied with your network OS and the instruction manual for the AXIS 1611
2	**Configure the Print Server**	
	• For Windows 98/Me	p. 3-60
	• For Windows 2000/XP/Server 2003	p. 3-64
3	**Install the Clients**	p. 3-70

NOTE

Using this printer on your network requires that both the print server and clients are using Windows 98/Me or Windows 2000/XP/Server 2003.

For Windows 98/Me

NOTE

The example screen shots shown in this section are from Windows Me.

■ Preparing the Print Sharing Settings

1 **Double-click [My Computer] → [Control Panel] → the [Network] icon.**

The [Network] dialog box is displayed.

2 **Open the [Configuration] sheet, then click [Add].**

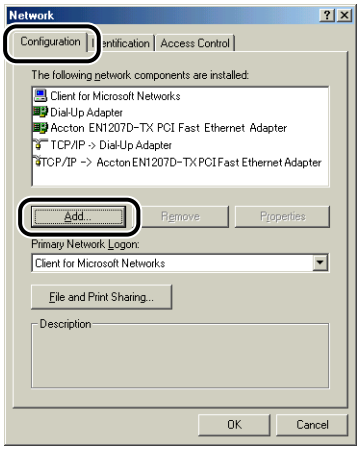

The [Select Network Component Type] dialog box is displayed.

3 **Select the [Service] icon, then click [Add].**

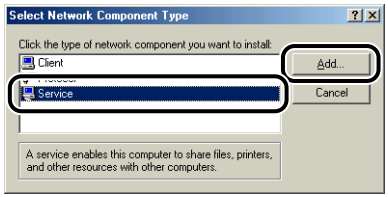

4 Select [File and printer sharing for Microsoft Networks], then click [OK].

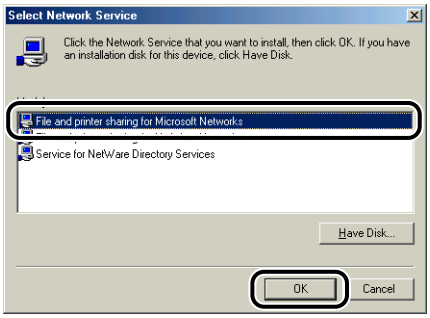

The [Select Network Component Type] dialog box appears momentarily, then the [Network] dialog box reappears.

5 Click [File and Print Sharing].

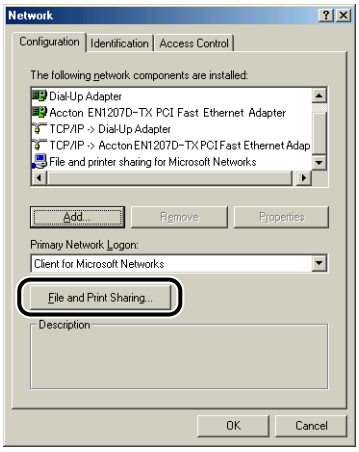

6 Make sure that [I want to be able to allow others to print to my printer(s).] is selected, then click [OK].

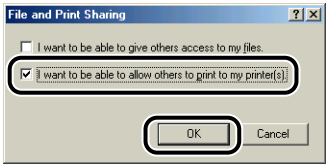

7 **Go to the [Access Control] sheet and select either [Share-level access control] or [User-level access control].**

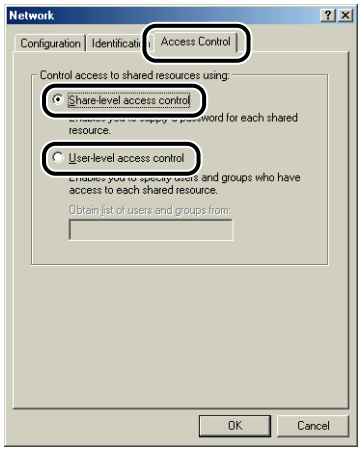

8 **Click [OK], then restart Windows.**

■ *Printer Sharing Settings*

1 **From the [Start] menu, select [Settings] → [Printers].**

The [Printers] folder opens.

2 **Right-click the icon for the printer, then select [Sharing] from the pop-up menu.**

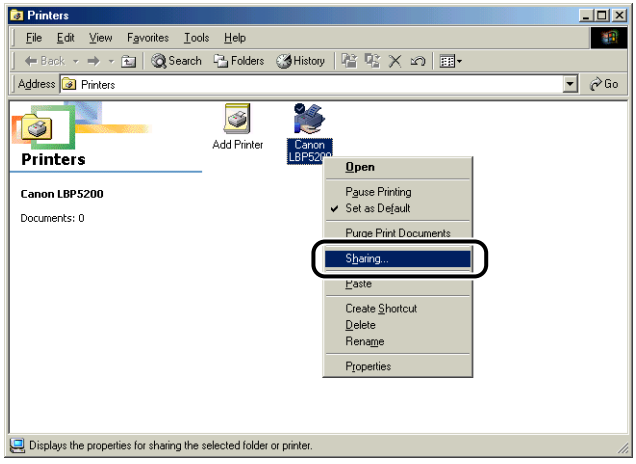

3 Select [Shared As]. Change the [Share Name] and enter a [Comment] and [Password] as needed.

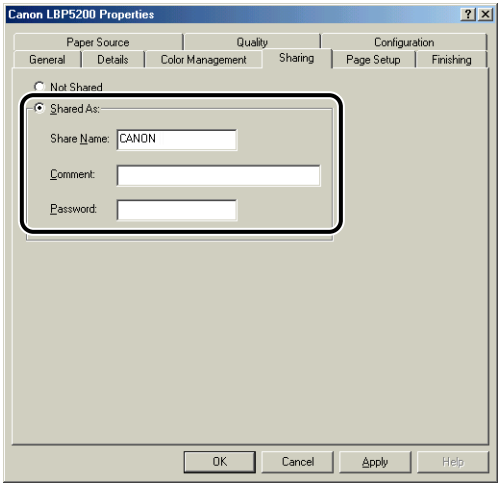

NOTE

- If you selected [User-level access control] in Step 7 of the "Network Settings" procedure (See p. 3-62), click [Add] and select the users that can use the printer.
- Do not enter blank or special characters in [Shared As].

4 Click the [OK] button.

The printer icon changes to the shared printer icon.

For Windows 2000/XP/Server 2003

NOTE

The screen shots shown in this section are taken from Windows XP Professional.

■ Preparing the Print Sharing Settings

1 **Select [Control Panel] from the [Start] menu, then click [Network and Internet Connections] → [Network Connections].**

For Windows 2000: Select [Settings] → [Network and Dial-up Connections] from the [Start] menu.
For Windows Server 2003: Select [Control Panel] → [Network Connections] → [Local Area Connection] from the [Start] menu, and then proceed to Step 3.

For Windows 2000: The [Network and Dial-up Connections] folder is displayed.
For Windows XP: The [Network Connections] folder is displayed.

2 **Right-click the [Local Area Connection] icon, then select [Properties] from the pop-up menu.**

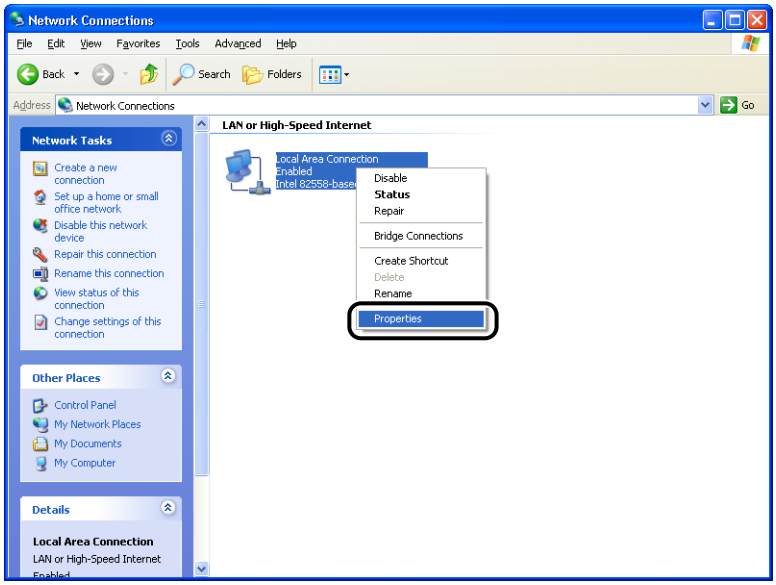

The [Local Area Connection Properties] dialog box appears.

3 Check that [File and Printer Sharing for Microsoft Networks] is selected, then click [OK].

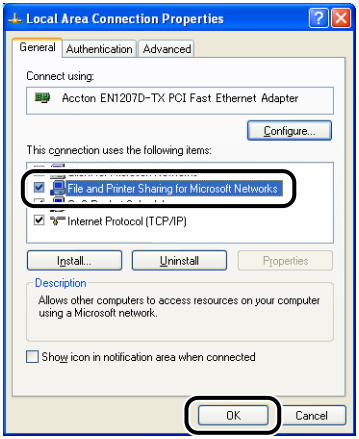

■ *Printer Sharing Settings*

NOTE

On Windows XP, printer sharing cannot be configured using the default settings (the settings immediately after installation).
To configure printer sharing, you need to run the [Network Setup Wizard] and enable the printer sharing.
For more details, see the Windows online help files.

1 Open the [Printers] folder or [Printers and Faxes] folder.

For Windows 2000: Select [Settings] → [Printers] from the [Start] menu.
For Windows XP Professional/Server 2003: Select [Printers and Faxes] from the [Start] menu.
For Windows XP Home Edition: Select [Control Panel] from the [Start] menu, then click [Printers and Other Hardware] → [Printers and Faxes].

The [Printers] folder or the [Printers and Faxes] folder is displayed.

2 Right-click the icon for the printer, then select [Sharing] from the pop-up menu.

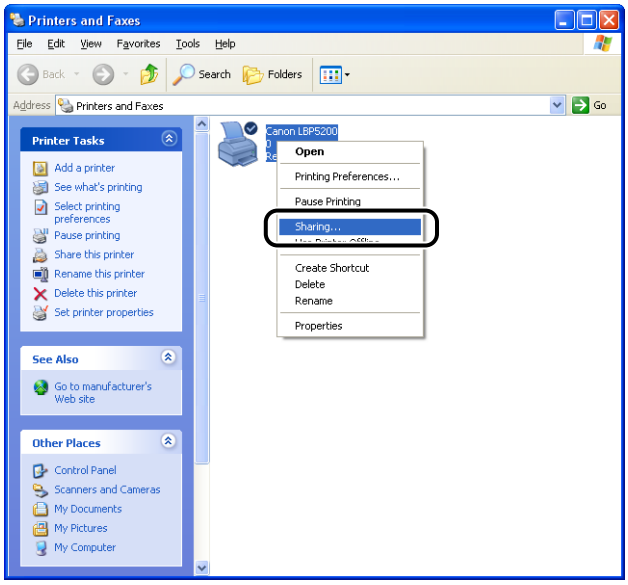

3 Select [Share this printer]. Change the share name if required.

For Windows 2000: Select [Shared as].

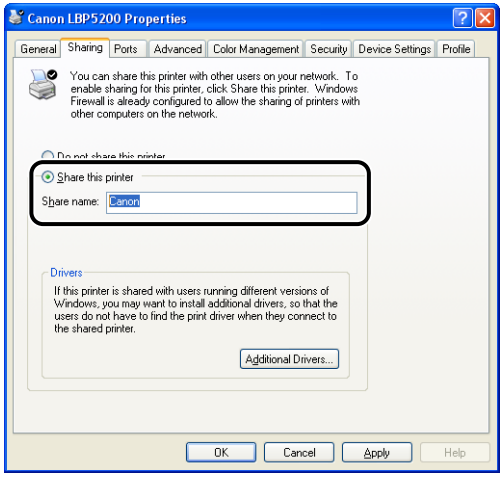

NOTE

- You can also specify the sharing settings during the local installation.
- Do not enter blank or special characters in the share name.

4 Click [Additional Drivers].

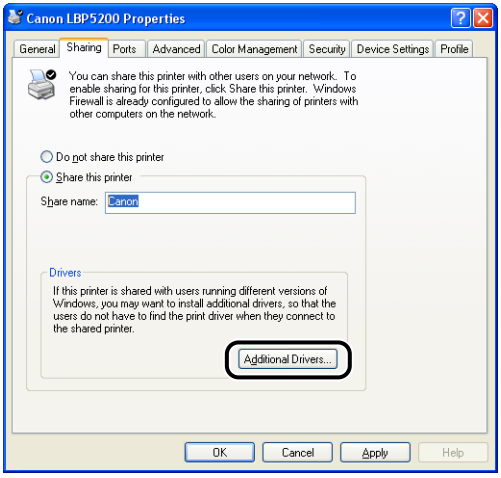

The [Additional Drivers] dialog box is displayed.

5 Place a checkmark next to [Windows 95, 98 and Me], then click [OK].

For Windows 2000: Place a checkmark next to [Windows 95 or 98], and then click [OK].

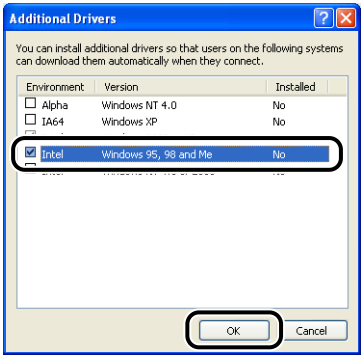

6 Insert the supplied "LBP5200 User Software" CD-ROM into the CD-ROM drive.

If the [Insert Disk] dialog box appears, click [OK].

7 Click [Browse]. If your CD-ROM drive is drive [D:], select [D:\English\Win98_Me], and then click [OK].

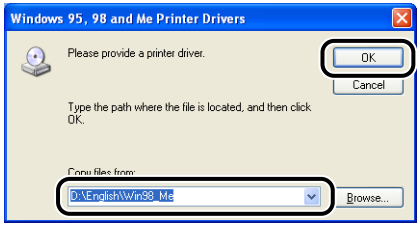

Windows will begin copying files.

8 Click [OK].

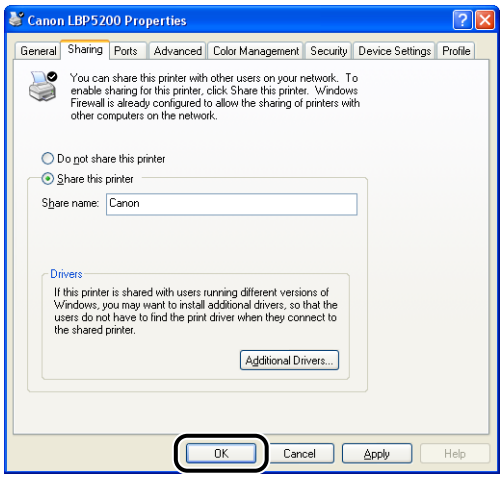

The printer icon changes to the shared printer icon.

IMPORTANT

Select [Do not share this printer] on the [Sharing] sheet to clear the printer share settings. If you are clearing printer share settings on an operating system equipped with Windows Firewall, such as Window XP Service Pack 2, you need to use the utility software to clear the settings that were previously registered with Windows Firewall. (See p. 8-14)

■ *Configuring Windows Firewall*

If you are using an operating system equipped with Windows Firewall, such as Windows XP Service Pack 2, as a print server, you need to configure Windows Firewall to allow communication with the client computers.

Use the following procedure to ensure that Windows Firewall does not block this communication.

- If you installed the CAPT software from CD-ROM Setup, a [Warning] dialog box was displayed.

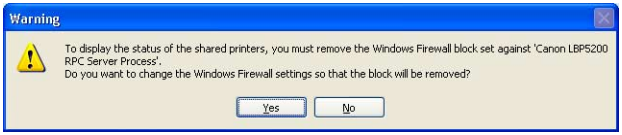

  - If you clicked [Yes], Windows Firewall was configured to allow communication with the client computers.
  - If you clicked [No], however, Windows Firewall was configured to block communication with the client computers, and you will need to use the following method to clear that block.
    1. Select [Control Panel] from the [Start] menu, then click [Network and Internet Connections] → [Windows Firewall].
    2. On the [Exceptions] sheet in the [Windows Firewall] dialog box, place a checkmark next to [Canon LBP5200 RPC Server Process], and click the [OK] button.

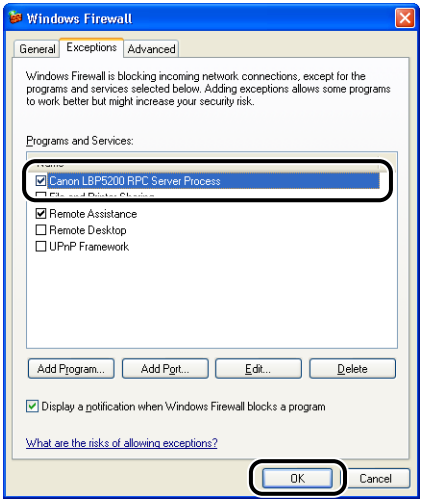

- If you installed the CAPT software by any method other than CD-ROM Setup, you need to use the utility software to configure Windows Firewall to unblock communication with the client computers. (See p. 8-14)

Installing the Client

This section describes the procedure for installing the printer driver on a client computer.

There are two ways to install the printer driver: local installation and download installation.

■ Local Installation (See p. 3-71)

This installs the printer driver using the supplied CD-ROM.

■ Download and Install

This installs the printer driver by downloading it from the print server, without needing to use the supplied CD-ROM. There are two ways for download and install the driver:

- Installing using the [Add Printer Wizard] (See p. 3-76)
- Installing using [Windows Explorer] (See p. 3-80)

IMPORTANT

- If you are using Windows 2000/XP/Server 2003, be sure to log on as a user who is a member of the Administrators group after starting the computer.
- If you are using Windows XP Service Pack 2 or another operating system equipped with Windows Firewall on the client side, configure the following settings. If you do not setup the following settings on the client side, the printer status may not display properly in the Printer Status Window and you may not be able to access some of the printer functions.
  1. Select [Control Panel] from the [Start] menu, then click [Network and Internet Connections] then [Windows Firewall].
  2. On the [Exceptions] sheet in the [Windows Firewall] dialog box, place a checkmark next to [File and Printer Sharing], and click the [OK] button.

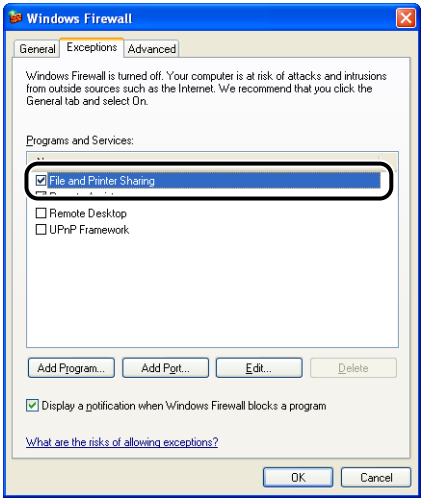

NOTE

- Clients can use both Windows 98/Me and Windows 2000/XP/Server 2003.
- If your print server is Windows 98/Me, you cannot download and install on Windows 2000/XP/Server 2003.
- The screen shots shown in this section are taken from Windows XP Professional.

Installing from CD-ROM Setup

1 Insert the supplied "LBP5200 User Software" CD-ROM into the CD-ROM drive.

If the CD-ROM is already in the drive, eject the disk and re-insert it into the drive.

The CD-ROM Setup program starts automatically.

IMPORTANT

If the CD-ROM Setup program does not start automatically, select [Run] from the [Start] menu, enter "D:\English\CNAC3MNU.exe", and click the [OK] button. (In this case the CD-ROM drive is assumed to be assigned to "D:". The actual CD-ROM drive letter may be different depending on the computer you are using.)

2 Click [Install].

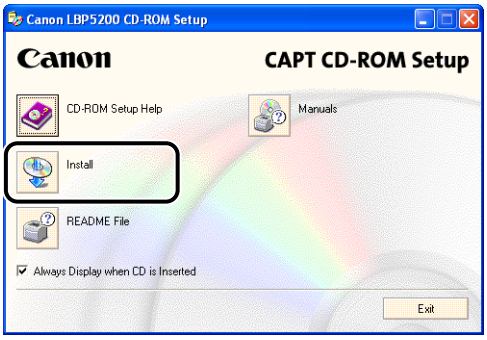

A dialog box is displayed to confirm the language.

3 Check that the language is correct and click [Yes].

After the preparation for installation is complete, the CAPT (Canon Advanced Printing Technology) software installer starts up, and the [Setup Wizard] dialog box appears.

4 Click [Next].

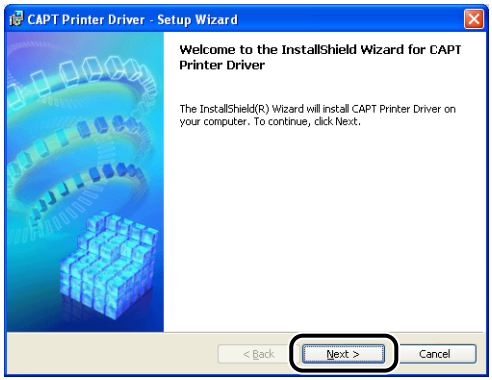

The [License Agreement] dialog box is displayed.

5 Check the contents of the agreement and select [I accept the terms in the license agreement], and then click [Next].

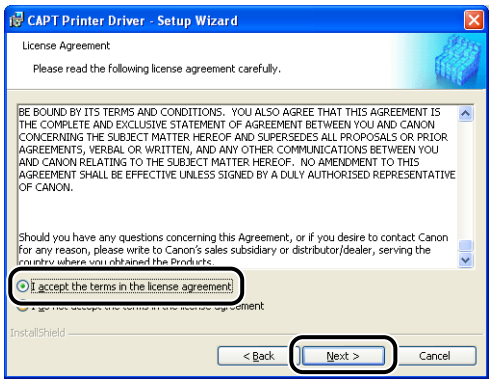

6 If the box for [Install Printer driver through a USB Connection] is checked, uncheck the box, then click [Next].

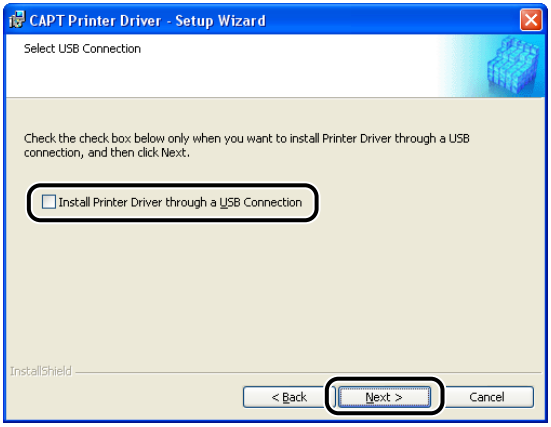

NOTE

Do not select [Install Printer Driver through a USB Connection].

7 Set [Port Settings] to [Use Network Printer], then click [Settings].

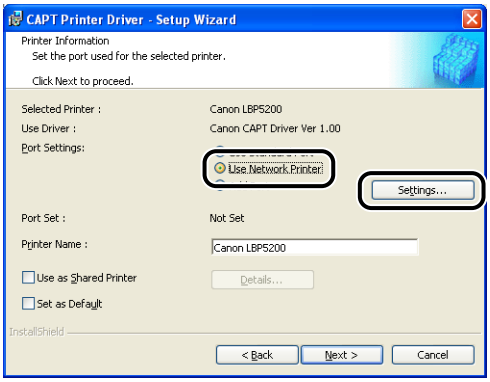

8 Select the directory of the print server, then click [OK].

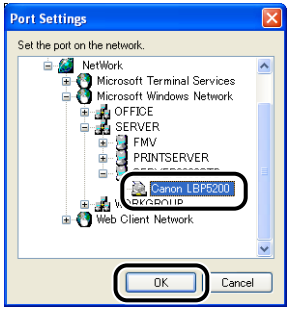

9 Select whether or not to use this printer as the default printer, then click [Next].

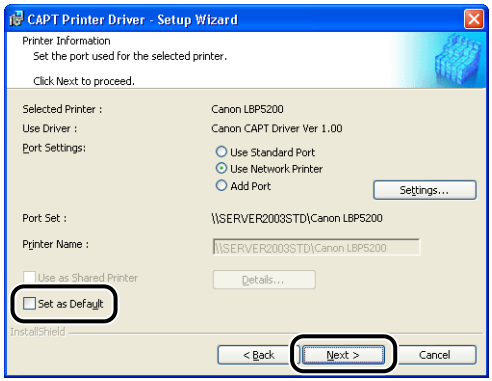

10 Click [Start].

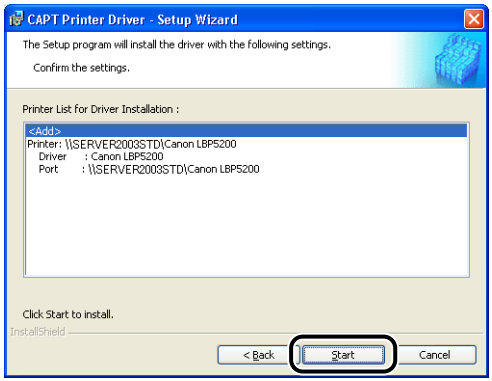

If you are using an operating system equipped with Windows Firewall, such as Windows XP Service Pack 2, the following window is displayed. Click [No].

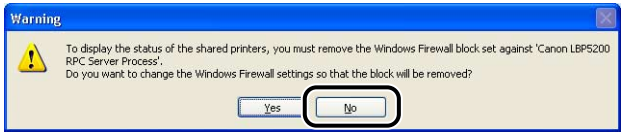

You should only choose [Yes] if the computer you are currently installing is a print server.

11 The message [Unable to cancel setup after setup is started. Are you sure you want to start setup now?] is displayed. Click [Yes].

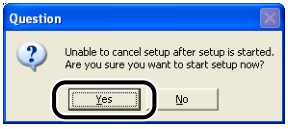

The installation of the printer driver starts.

12 Once the installation complete screen is displayed, select [Yes, I want to restart my computer now.] and click the [Exit] button.

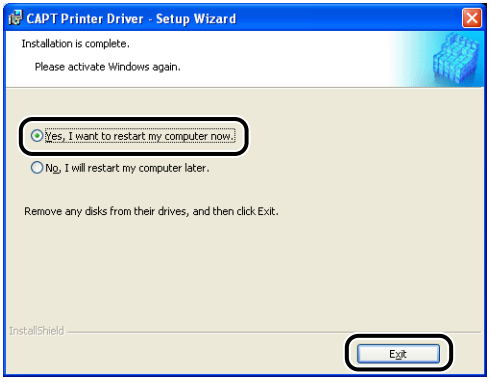

Windows restarts.

Installing using the Add Printer Wizard

1 Open the [Printers] folder or [Printers and Faxes] folder.

For Windows 98/Me/2000: Select [Settings] → [Printers] from the [Start] menu.
For Windows XP Professional/Server 2003: Select [Printers and Faxes] from the [Start] menu.
For Windows XP Home Edition: Select [Control Panel] from the [Start] menu, then click [Printers and Other Hardware] → [Printers and Faxes].

The [Printers] folder or the [Printers and Faxes] folder is displayed.

2 The [Add Printer Wizard] dialog box is displayed.

For Windows 98/Me/2000: Double-click [Add Printer].
For Windows XP Professional/Home Edition: Click [Add a printer].
For Windows Server 2003: Double-click [Add Printer].

The [Add Printer Wizard] dialog box is displayed.

3 Click [Next].

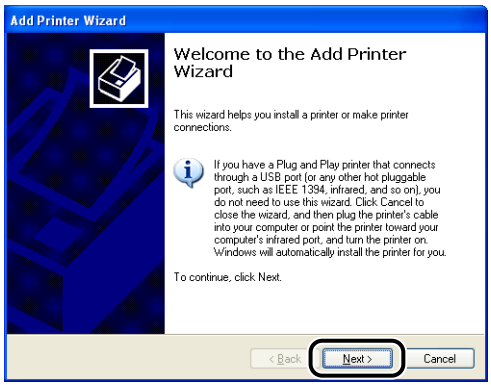

4 Select [A network printer, or a printer attached to another computer], then click [Next].

For Windows 98/Me/2000: Select [Network printer] then click [Next].

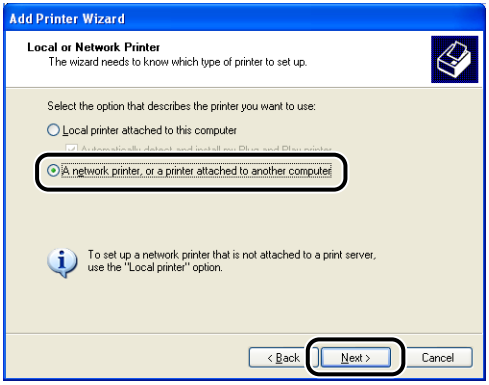

5 Click [Next].

For Windows 98/Me: Click [Browse].

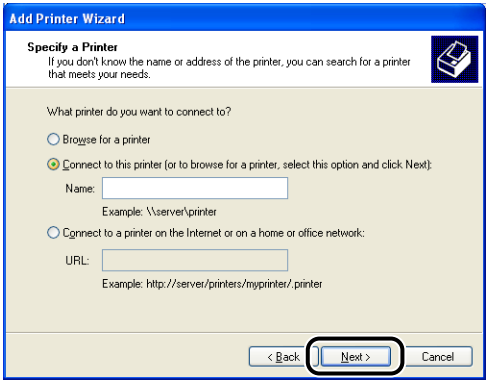

6 Select the directory of the print server, then click [Next].

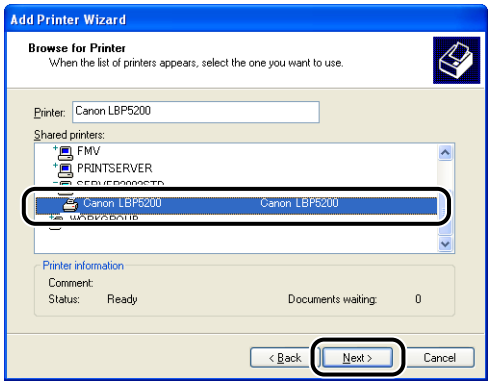

For Windows 98/Me: Proceed to Step 8.

7 Select whether or not to use this printer as the default printer, then click [Next].

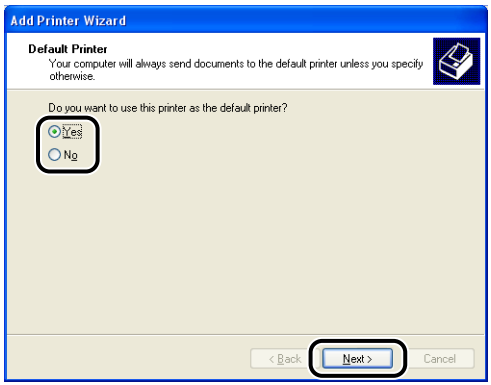

8 Click [Finish].

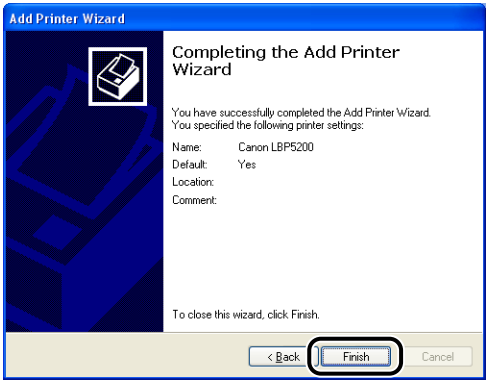

NOTE

If the [Hradware Installation] dialog box appears, click [Continue Anyway].

Installing using [Windows Explorer]

1 **From the [Start] menu, select [All Programs] → [Accessories] → [Windows Explorer].**

For Windows Me/2000: From the [Start] menu, select [Programs] → [Accessories] → [Windows Explorer].
For Windows 98: From the [Start] menu, select [Programs] → [Windows Explorer].

The [Windows Explorer] window is displayed.

2 **Select the print server from [My Network Places] (or [Network Computers] for Windows 98), then double-click the icon for this printer.**

Alternatively, you can drag and drop the icon for the printer into the [Printers and Faxes] folder or [Printers] folder.

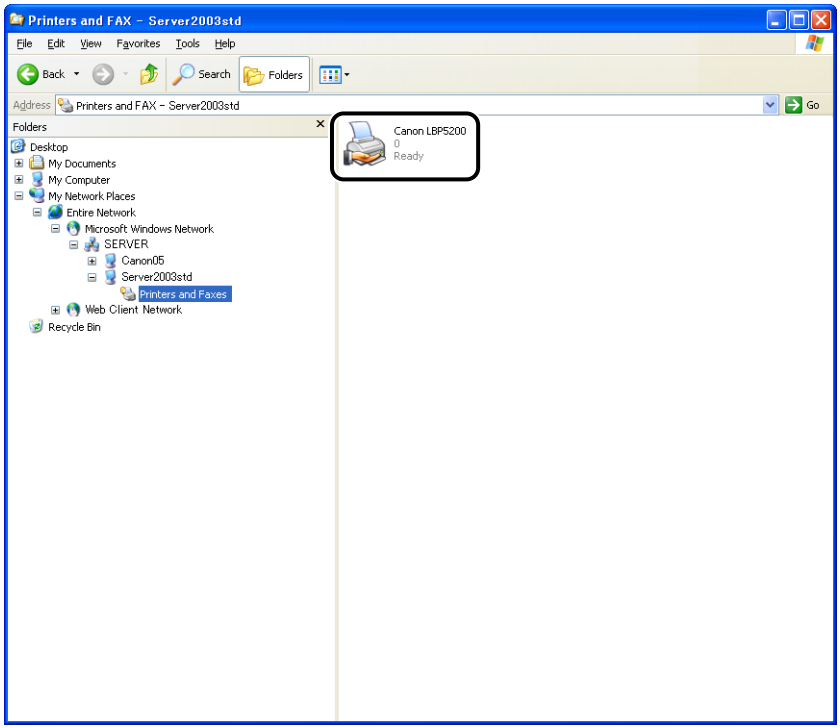

3 **Follow the instructions that appear on the screen.**

Uninstalling the CAPT Software

The process of removing software to restore the computer to the same state as before the software was installed is referred to as uninstalling. Use the following procedure to uninstall the CAPT software.

IMPORTANT

- If the software was installed with administrative permissions on Windows 2000/XP/Server 2003, then it cannot be uninstalled by anyone that does not have administrative permissions. Make sure you log on as a member of the Administrators group before uninstalling.
- If you are using a computer with an operating system equipped with Windows Firewall, such as Windows XP Service Pack 2, the printer is registered in the [Exceptions] sheet in the [Windows Firewall] dialog box.
  When you uninstall the CAPT software using the uninstaller, the settings for this printer are removed from the [Exceptions] sheet in the [Windows Firewall] dialog box.

1 **Close all of the files and programs listed below:**

- Help files
- Printer Status Window
- Control Panel
- Other applications

2 **From the [Start] menu, select [All Programs] → [Canon Printer Uninstaller] → [Canon LBP5200 Uninstaller].**

For Windows 98/Me/2000: From the [Start] menu, select [Programs] → [Canon Printer Uninstaller] → [Canon LBP5200 Uninstaller].

The [Delete Printer] dialog box is displayed.

3 **Select the name of the printer.**

4 Click [Delete].

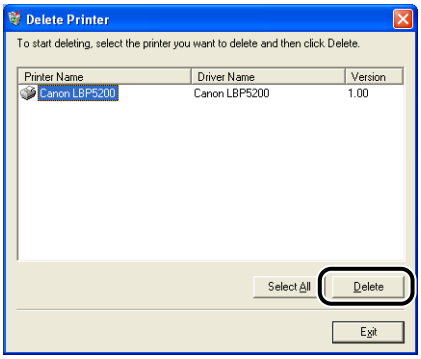

A confirmation message is displayed.

5 Click [Yes].

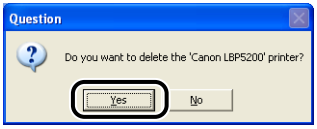

The uninstallation process begins. Please wait a moment.

6 Click [Exit].

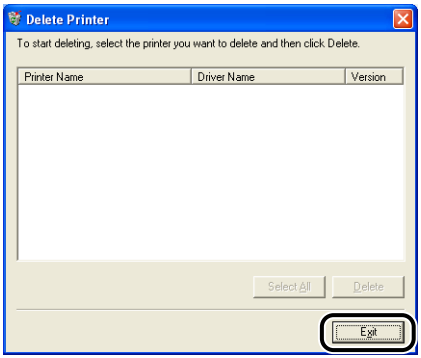

The [Delete Printer] dialog box closes.

NOTE

If the CAPT software could not be uninstalled, refer to "If Uninstallation Fails," on p. 7-42.

Printing a Document

4

CHAPTER

This chapter describes the printing procedures and the functions of the printer.

Setting Printer Information Before Printing 4-2

Printing from an Application 4-5

Specifying Printing Options 4-10

For Windows 98/Me 4-10

For Windows 2000/XP/Server 2003 4-14

Canceling a Print Job 4-20

Using the Printing Functions. 4-21

Various Pages in the Printer Driver. 4-21

Printing Multiple Pages on One Sheet 4-38

Scaling Printer Output 4-40

Poster Printing 4-42

Watermark Printing 4-43

Specifying Custom Paper (Non-Standard Paper) 4-47

Printing Borders and The Date. 4-50

Gutters 4-52

Specifying the Finishing Method 4-53

Specifying the Paper Feed Method 4-55

Specifying the Print Quality 4-56

Color Settings. 4-58

Working with Profiles 4-64

Editing Print Jobs with PageComposer 4-68

Viewing Printer Settings/Restoring the Default Settings. 4-70

Printer Status Window 4-72

Using the Printer Status Window 4-72

Displaying the Printer Status Window 4-74

Setting Preferences 4-75

[Register Paper Size] Menu Item 4-77

[Consumables/Counters] Menu Item 4-78

[Refresh] Menu Item. 4-78

[Utility] Menu Item 4-78

Displaying Printer Status When Using a Print Server. 4-79

Setting Printer Information Before Printing

You should configure the paper source options before printing. Make sure you update printer settings each time you install an optional printer accessory.

1 Open the [Printers and Faxes] folder or [Printers] folder.

For Windows 98/Me/2000: Select [Settings] → [Printers] from the [Start] menu.
For Windows XP Professional/Server 2003: Select [Printers and Faxes] from the [Start] menu.
For Windows XP Home Edition: Select [Control Panel] from the [Start] menu, then click [Printers and Other Hardware] → [Printers and Faxes].

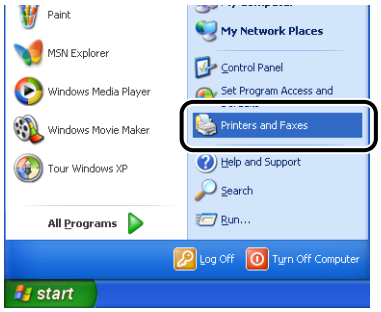

The [Printers and Faxes] folder or [Printers] folder is displayed.

2 Select the icon corresponding to your printer, then select [Properties] from the [File] menu.

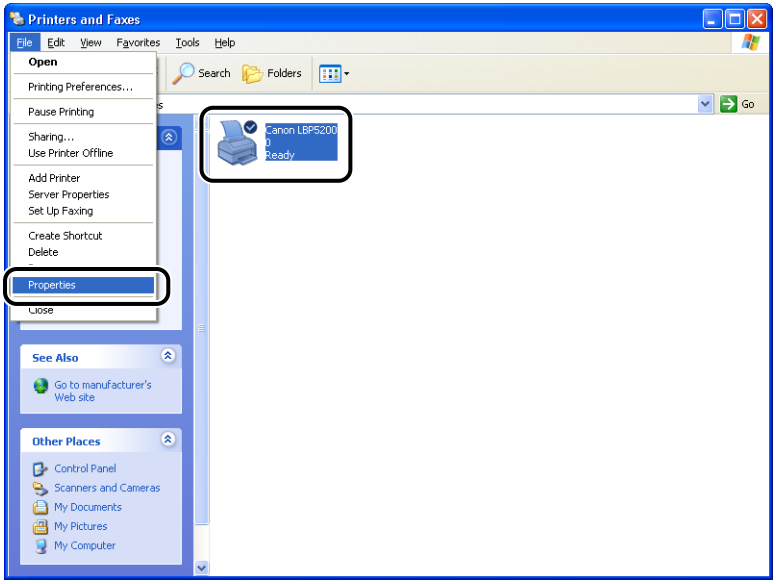

The [Printer Properties] dialog box is displayed.

NOTE

The [Printer Properties] dialog box can also be opened by right-clicking the icon for your printer and selecting [Properties] from the pop-up menu.

3 Display the [Configuration] (for Windows 98/Me) or [Device Settings] (for Windows 2000/XP/Server 2003) sheet and then select [250 Sheet Cassette] from the [Paper Source Options].

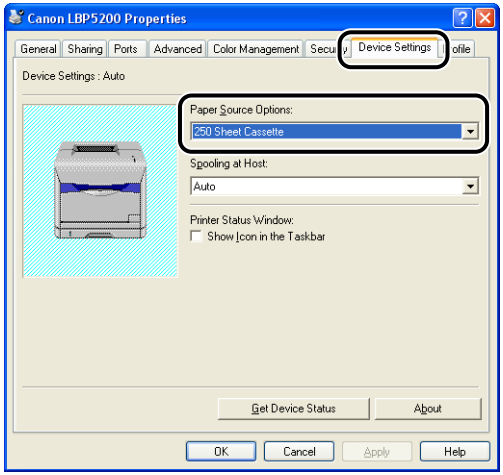

NOTE

You can also obtain printer device information such as paper source options automatically by clicking [Get Device Status].

4 Click [OK].

Printing from an Application

Now that you have installed the CAPT software, its time to start printing documents.

This section describes the procedure for printing from an application, taking Adobe Reader 6.0 as an example.

1 **Load paper in the multi-purpose tray or paper cassette. ("Printing from the Multi-purpose Tray," on p. 2-15, "Printing from the Paper Cassette," on p. 2-34)**

2 **Open the PDF file you want to print with Adobe Reader, and then select [Print Setup] from the [File] menu.**

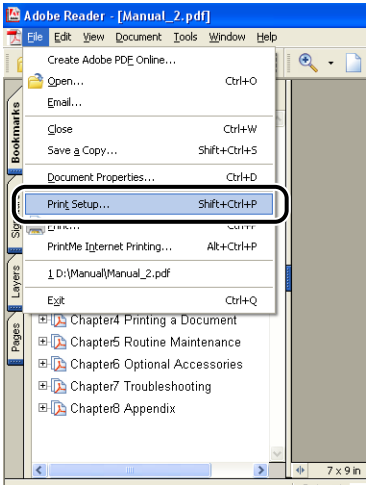

3 Specify the paper size of the document and the printing orientation, then click [OK].

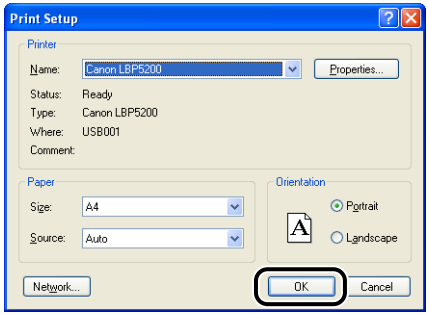

4 Select [Print] from the [File] menu.

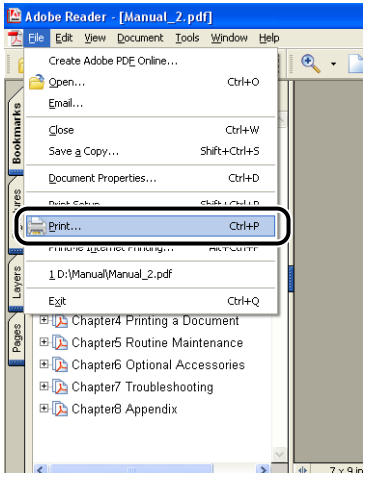

The [Print] dialog box appears.

5 Select this printer from [Name] or [Printer Name] list, then select your printing preferences.

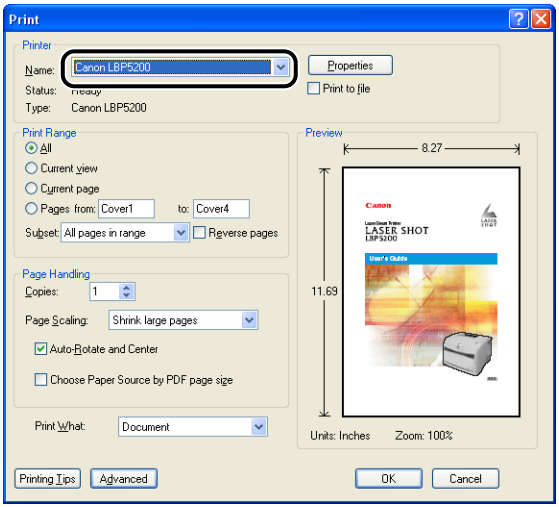

NOTE

The printer name displayed in this dialog box can be changed from the [Printers and Faxes] folder (the [Printers] folder for Windows 98/Me/2000).

6 If you want to specify more detailed printing preferences, click [Properties].

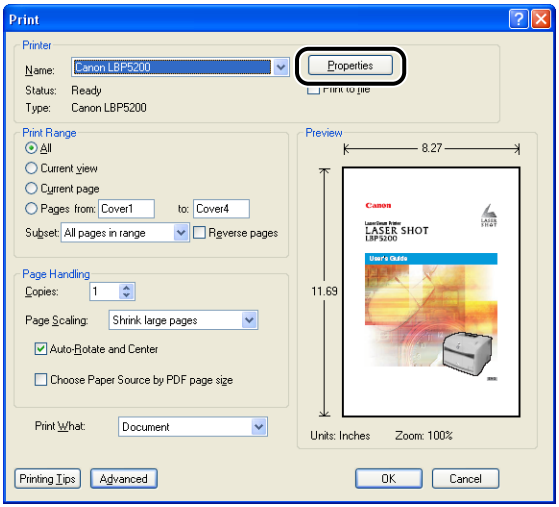

The [Canon LBP5200 Properties] dialog box is displayed.

NOTE

The procedure for opening the [Document Properties] dialog box may vary depending on the application being used.

7 Specify the printing preferences on the [Page Setup], [Finishing], [Paper Source], and [Quality] sheets.

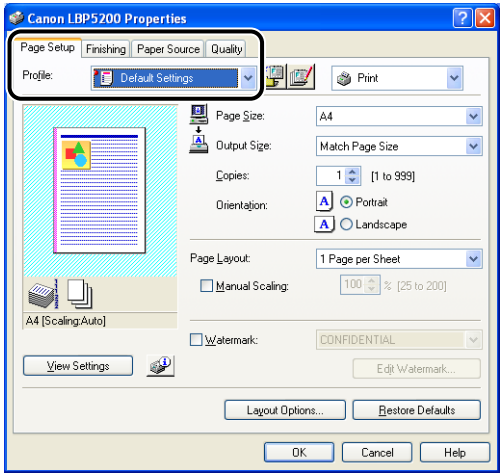

NOTE

- The settings that are specified here only apply to the currently opened file. Check the contents of the [Document Properties] dialog each time you print. In particular, it is recommended that you verify the information on the [Page Setup] sheet and the [Paper Source] sheet.
- The default settings for all files can be configured using the following dialog box.
  - For Windows 98/Me: Open the [Printer Properties] dialog box from the [Printers] folder. (See "Opening the [Printer Properties] Dialog Box from the [Printers] Folder," on p. 4-13)
  - For Windows 2000/XP/Server 2003: Open the [Document Properties] dialog box from the [Printers and Faxes] folder or [Printers] folder. (See "Opening the [Document Properties] Dialog Box from the [Printers and Faxes] Folder or [Printers] Folder," on p. 4-16)

8 If you want to print the document more clearly, click the [Quality] sheet, then select [Photos] from the [Objective] list.

Although this makes the document take longer to print than the [General] setting, the document may print more clearly.

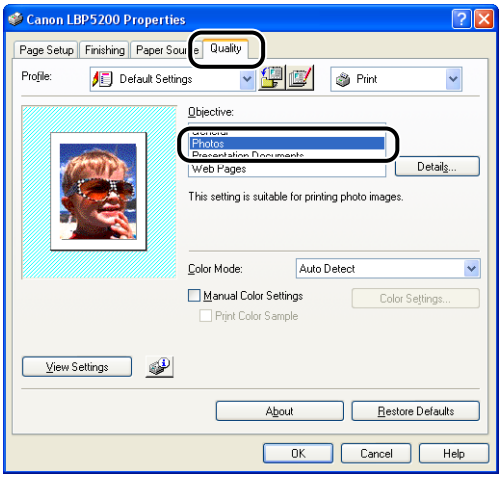

9 Click [OK].

The [Print] dialog box reappears.

10 Click [OK].

The document begins printing.

NOTE

- If the document does not print properly, refer to Chapter 7 "Troubleshooting".
- Refer to "Using the Printing Functions," on p. 4-21 for an explanation on using the features of the printer and printer driver. To ensure that a document prints the way you want it to, adjust the printer and printer driver settings.

Specifying Printing Options

The CAPT software allows you to configure various printing preferences for the LBP5200.

You can configure various printer functions on each of the pages of the [Printer Properties] dialog box and [Document Properties] dialog box. Depending on your OS, using the following procedures to open these property dialog boxes.

For Windows 98/Me

If the [Document Properties] dialog box is opened from within an application, the settings are only applicable to that particular print job.

If you open the [Printer Properties] dialog box from the [Printers] folder, you can configure the default printer options and other settings for all print jobs.

NOTE

The [Configuration] sheet, which allows you to configure printer options, can be only be opened using the procedure described in "Opening the [Printer Properties] Dialog Box from the [Printers] Folder," on p. 4-13.

Opening the [Document Properties] Dialog Box from an Application

In this section, Adobe Reader 6.0 is used as an example in the descriptions of the various procedures.

1 Select [Print] from the [File] menu in the application.

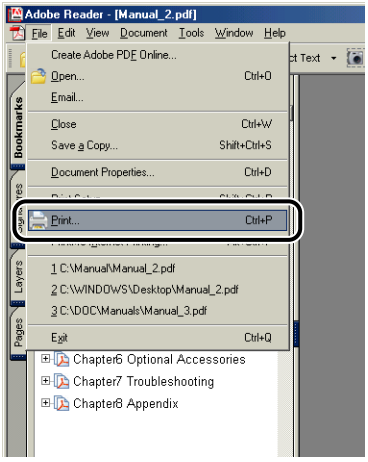

The [Print] dialog box is displayed.

NOTE

The print command is different depending on the application you are using. Refer to the users manual supplied with your application for further details.

2 Select the printer from [Name] or [Printer Name] drop-down list, and click [Properties].

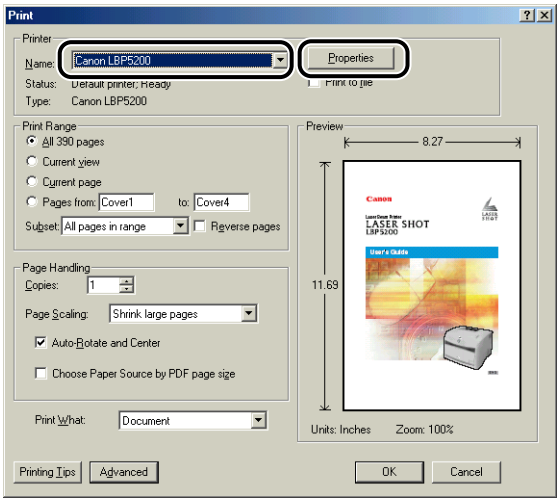

The [Document Properties] dialog box is displayed.

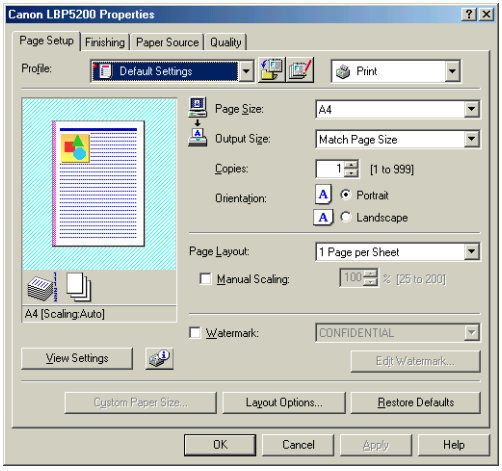

Opening the [Printer Properties] Dialog Box from the [Printers] Folder

1 **Select [Settings] → [Printers] from the [Start] menu.**

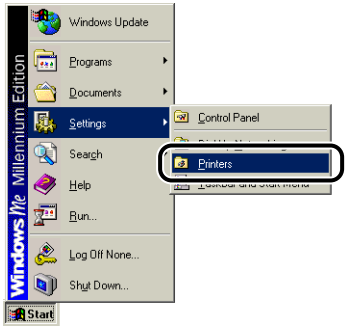

The [Printers] folder opens.

2 **Select the icon corresponding to your printer, then select [Properties] from the [File] menu.**

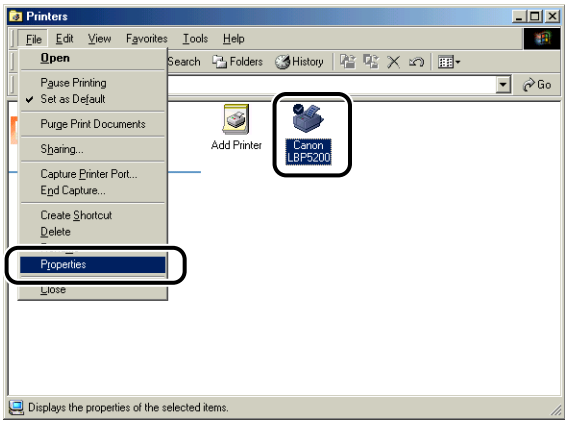

The [Printer Properties] dialog box is displayed.

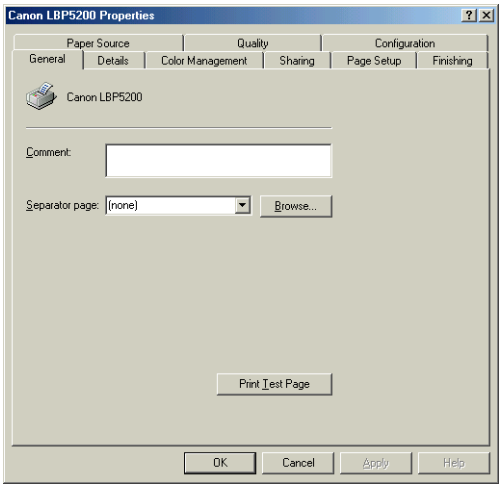

NOTE

The [Printer Properties] dialog box can also be displayed by right-clicking the icon for the printer and selecting [Properties] from the pop-up menu.

For Windows 2000/XP/Server 2003

If you open the [Document Properties] dialog box from within an application, you can only configure the settings for that print job.
If you open the [Document Properties] dialog box from the [Printers and Faxes] folder or [Printers] folder, you can specify the default settings used by all print jobs.
If you open the [Printer Properties] dialog box from the [Printers and Faxes] folder or [Printers] folder, you can configure printer options and create "Profiles" of frequently used options.

NOTE

- To change settings in the [Printers and Faxes] folder or [Printers] folders you need to have Full Access Permissions. If you are unable to open the [Document Properties] dialog box from within the [Printers and Faxes] folder or [Printers] folder, open it from within the application.
- The [Device Settings] sheet, which allows you to configure printer options, can be only be opened using the procedure described in "Opening the [Printer Properties] Dialog Box from the [Printers and Faxes] Folder or [Printers] Folder," on p. 4-18.

Opening the [Document Properties] Dialog Box from the Application

In this section, Adobe Reader 6.0 is used as an example in the descriptions of the various procedures.

1 Select [Print] from the [File] menu in the application.

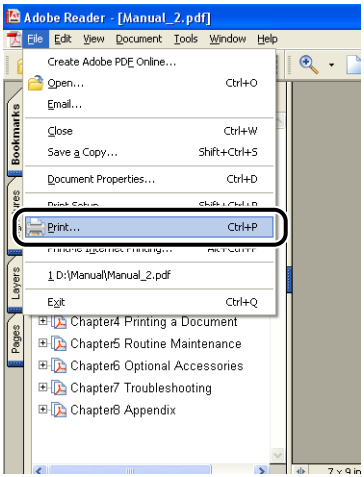

2 Confirm the printer name, then click [Properties].

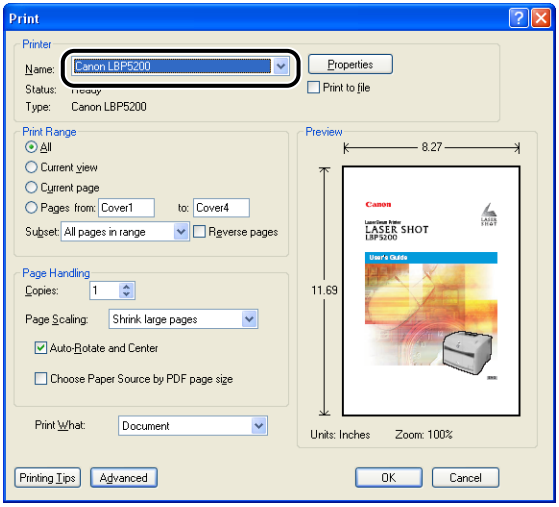

The [Document Properties] dialog box is displayed.

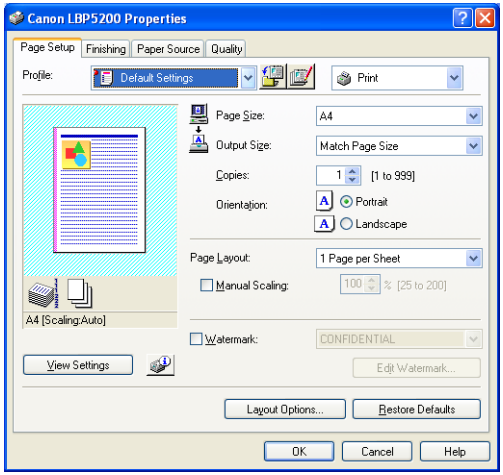

Opening the [Document Properties] Dialog Box from the [Printers and Faxes] Folder or [Printers] Folder

1 Open the [Printers and Faxes] folder or [Printers] folder.

For Windows 2000: Select [Settings] → [Printers] from the [Start] menu.
For Windows XP Professional/Server 2003: Select [Printers and Faxes] from the [Start] menu.
For Windows XP Home Edition: Select [Control Panel] from the [Start] menu, then click [Printers and Other Hardware] → [Printers and Faxes].

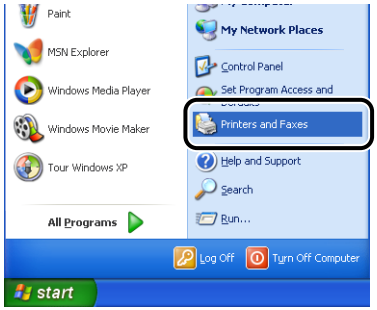

The [Printers and Faxes] folder or [Printers] folder is displayed.

2 Select the icon corresponding to your printer, then select [Printing Preferences] from the [File] menu.

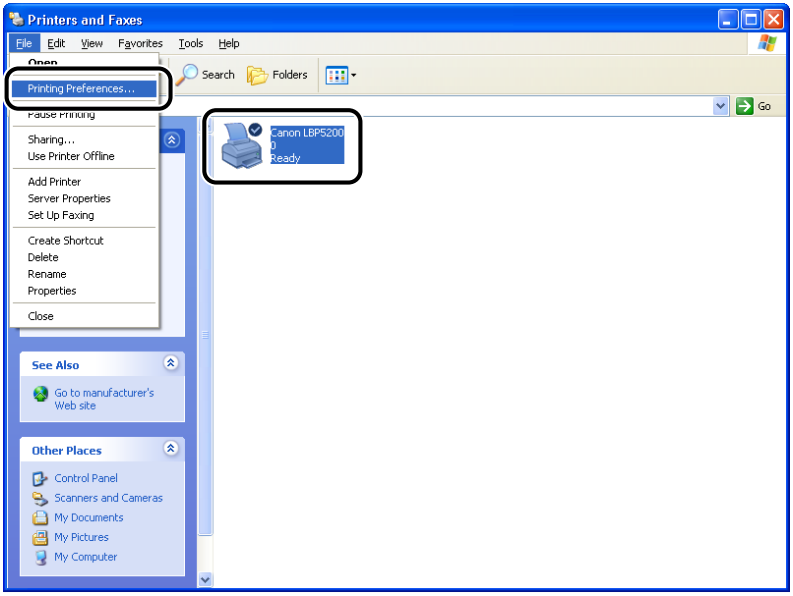

The [Document Properties] dialog box is displayed.

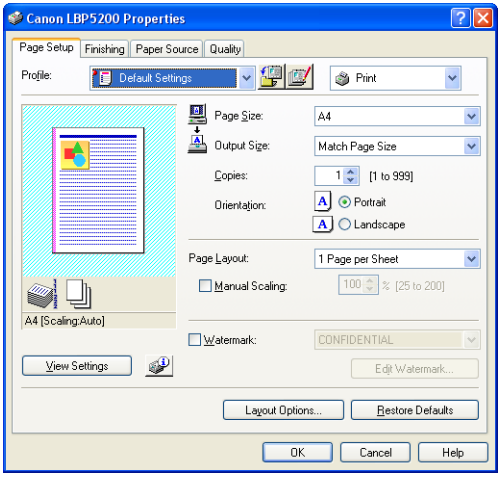

NOTE

The [Document Properties] dialog box can also be opened by right-clicking the icon for your printer and selecting [Printing Preferences] from the pop-up menu.

Opening the [Printer Properties] Dialog Box from the [Printers and Faxes] Folder or [Printers] Folder

1 Open the [Printers and Faxes] folder or [Printers] folder.

For Windows 2000: Select [Settings] → [Printers] from the [Start] menu.
For Windows XP Professional/Server 2003: Select [Printers and Faxes] from the [Start] menu.
For Windows XP Home Edition: Select [Control Panel] from the [Start] menu, then click [Printers and Other Hardware] → [Printers and Faxes].

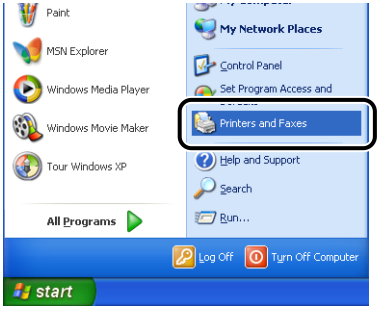

The [Printers and Faxes] folder or [Printers] folder is displayed.

2 Select the icon corresponding to your printer, then select [Properties] from the [File] menu.

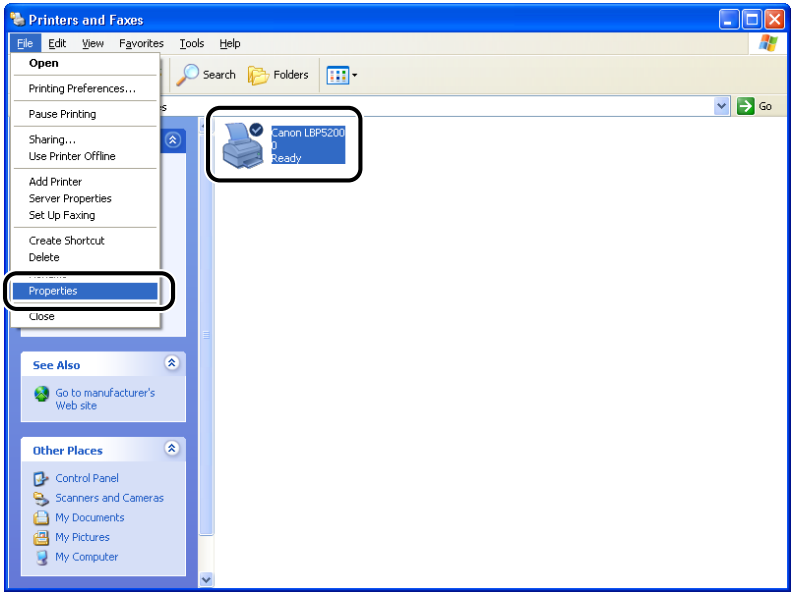

The [Printer Properties] dialog box is displayed.

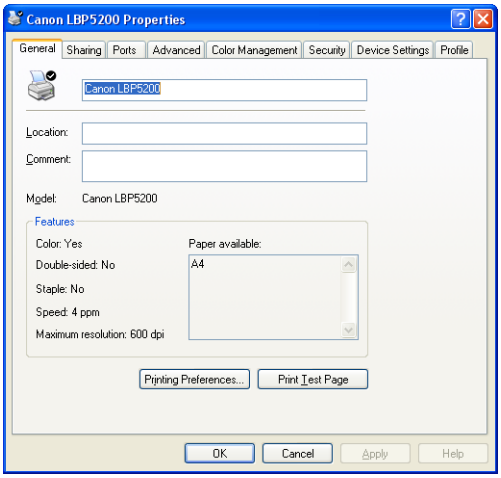

NOTE

The [Printer Properties] dialog box can also be opened by right-clicking the icon for your printer and selecting [Properties] from the pop-up menu.

Canceling a Print Job

You can use the Printer Status Window to cancel, pause, or resume print jobs.

1 Start printing.

The Printer Status Window appears.

NOTE

The Printer Status Window may not appear depending on the [Display Printer Status Window] setting in the [Preferences] menu. (See "Setting Preferences," on p. 4-75)

2 Click the button on the toolbar that corresponds to the operation you want to perform.

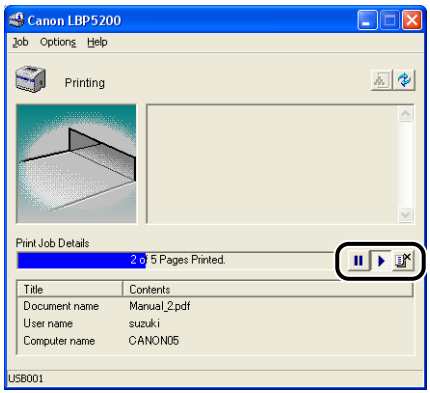

- **Canceling a Print Job**

  ❑ Click [ ] (Delete Job).

- **Pausing a Print Job**

  ❑ Click [ ] (Pause Job).

- **Resuming a Print Job**

  ❑ Click [ ] (Resume Job).

Using the Printing Functions

Various Pages in the Printer Driver

The [Printer Properties] and [Document Properties] dialog boxes contain the following sheets, which can be used to configure a variety of printer functions. Click on the tab corresponding to a sheet to switch the display to that sheet.

This section describes the types of printing preferences that can be specified in each sheet.

■ For Windows 98/Me

- [Document Properties] Dialog Box
  - [Page Setup] Sheet
  - [Finishing] Sheet
  - [Paper Source] Sheet
  - [Quality] Sheet
- [Printer Properties] Dialog Box
  - [General] Sheet
  - [Details] Sheet
  - [Sharing] Sheet
  - [Color Management] Sheet
  - [Page Setup] Sheet
  - [Finishing] Sheet
  - [Paper Source] Sheet
  - [Quality] Sheet
  - [Configuration] Sheet

■ For Windows 2000/XP/Server 2003

- [Document Properties] Dialog Box
  - [Page Setup] Sheet
  - [Finishing] Sheet
  - [Paper Source] Sheet
  - [Quality] Sheet
- [Printer Properties] Dialog Box
  - [General] Sheet
  - [Sharing] Sheet
  - [Ports] Sheet
  - [Advanced] Sheet
  - [Color Management] Sheet
  - [Security] Sheet
  - [Device Settings] Sheet
  - [Profile] Sheet

NOTE

For more details on using these sheets, refer to the Online Help.
You can access the online help using the following procedure. To close any online help that is currently displayed, click somewhere inside the online help window.

- Press the [Tab] key on your keyboard to select the item about which you want to display Help, then press the [F1] key.
- Right-click the item about which you want to display Help, then click [What's This?] from the pop-up menu.
- Click [?] (Help) on the Titlebar, then move the mouse pointer with attached [?] over the item you want help with and click on it.

[Page Setup] Sheet

The [Page Setup] sheet allows you to specify the following printing preferences:

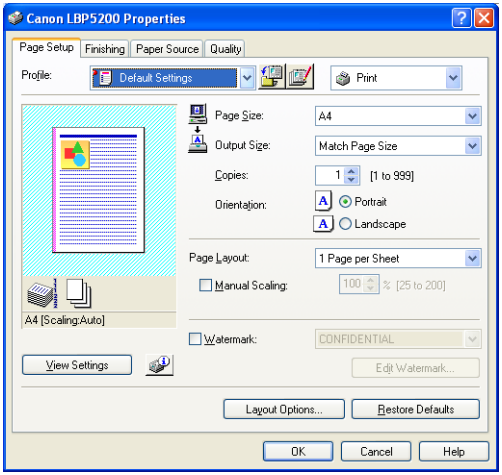

■ [Page Size]

Expand the [Page Size] drop-down list and select the desired size by clicking it.

The page sizes that can be selected are as follows:

- Standard paper sizes (Sizes from A3 to A5 and from Legal to Executive)
- Envelopes (Envelope DL, Envelope COM10, Envelope C5, Envelope Monarch, Envelope B5)
- Index Card
- Custom Paper Size (See p. 4-47)

■ [Output Size]

Expand the [Output Size] drop-down list and select the desired paper size.

The output paper sizes that can be selected are as follows:

- Match Page Size
- Standard paper sizes (Sizes from A3 to A5 and from Legal to Executive)
- Envelopes (Envelope DL, Envelope COM10, Envelope C5, Envelope Monarch, Envelope B5)
- Index Card
- Custom Paper Size (See p. 4-47)

NOTE

- When printing on paper that is the same size as the [Page Size], select [Match Page Size].
- If you select a paper size that differs from [Page Size], the print will be automatically reduced or enlarged to fit on the page.

- When [Page Size] is set to A3 or B4 and [Output Size] is set to [Match Page Size], the print job will be automatically reduced and printed on A4 size (default) paper.
- If the application you are using allows you to specify the page size, number of copies, and orientation settings, you do not have to specify these settings in the [Page Setup] sheet.

■ [Copies]

Specifies the number of copies to be printed.

You can click on the up and down arrows to change the [Copies] setting or type a value directly into the box. The number of copies can be set to between 1 and 999.

■ [Orientation]

Specifies whether the document will be printed in portrait or landscape orientation.

Click on either [Portrait] or [Landscape] to change the [Orientation].

■ [Page Layout] (See p. 4-38)

- N Pages per Sheet
  Multiple pages can be printed on one sheet of paper.
  The number of pages that can be selected is 1, 2, 4, 6, 8, 9, or 16 (Pages per Sheet).
  If you select 2, 4, 6, 8, 9, or 16 pages per sheet, the [Page Order] drop-down list appears, allowing you to specify the page order.
- Poster
  Magnifies a single page image and prints it out over several sheets of paper.
  The number of pages that can be selected is 2 x 2, 3 x 3, or 4 x 4.

■ [Manual Scaling] / [Page Order] (See p. 4-40)

The [Manual Scaling] setting is displayed if the [Page Layout] is set to 1 page per sheet. The [Page Order] setting is displayed if the number of pages per sheet is 2, 4, 6, 8, 9 or 16.

- Manual Scaling: The scale factor is automatically adjusted if the [Page Size] and [Output Size] are different. If you want to change the scale factor manually, select [Manual Scaling] and enter the numerical scale factor in the adjacent box. The scale factor can be set to between 25 and 200%.
- Page Order: You can select the way the pages are arranged when printing multiple pages on one sheet of paper.

■ [Custom Paper Size] (Windows 98/Me only) (See p. 4-47)

Allows you to enter the paper length and width when you are printing on custom paper that does not match any of the standard paper sizes.
Up to 30 custom paper sizes can be added to the LBP5200.

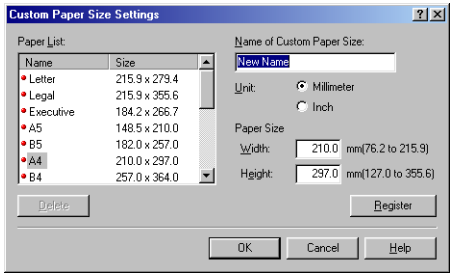

■ [Watermark] (See p. 4-43)

Specifies whether a watermark is superimposed onto the printed document.

■ [Edit Watermark] (See p. 4-45)

Click on [Edit Watermark] to open the dialog box shown below.

This dialog box allows you to create new watermarks and edit existing watermarks.

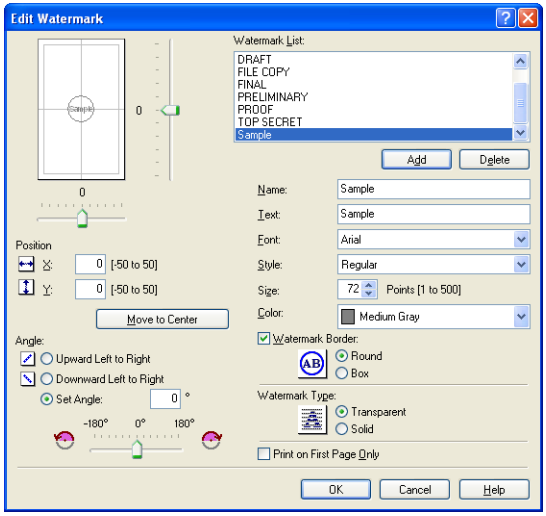

■ [Layout Options] (See p. 4-50)

Click on [Layout Options] to open the dialog box shown below.
This dialog box allows you to specify borders, date information, and page numbers to print with the document.

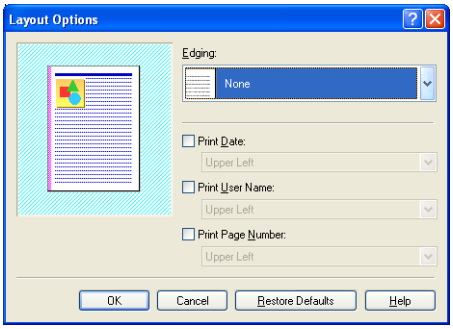

[Finishing] Sheet

The [Finishing] sheet allows you to specify the following printing preferences:

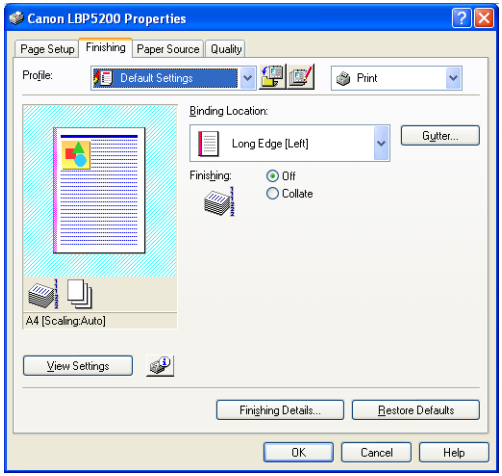

■ [Binding Location] (See p. 4-52)

Specifies which edge of the page is to be bound.

■ [Gutter] (See p. 4-52)

Click on [Gutter] to open the dialog box shown below.

This dialog box allows you to specify the width of the gutter and to select image processing options.

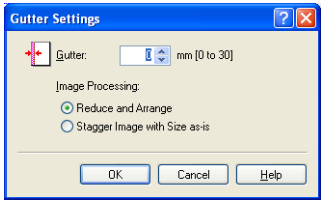

■ [Finishing]

You can set the finishing property to any of the following choices:

- Off: Each page is printed repeatedly to give the desired number of copies.
- Collate: The entire document is printed repeatedly to produce the desired number of copies.

■ [Finishing Details] (See p. 4-53)

Click on [Finishing Details] to open the dialog box shown below.

This dialog box allows you to specify various job processing options.

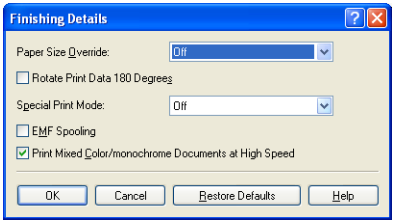

- [EMF Spooling] (Windows 2000/XP/Server 2003 only) controls the spooling file format for print jobs.
  If this option is selected, print jobs spool in metafile format, if it is not selected, print jobs spool in RAW format.
  If the printer is set up as a network printer, print jobs always spool in RAW format.

[Paper Source] Sheet

You can specify the following printing preferences in the [Paper Source] sheet.

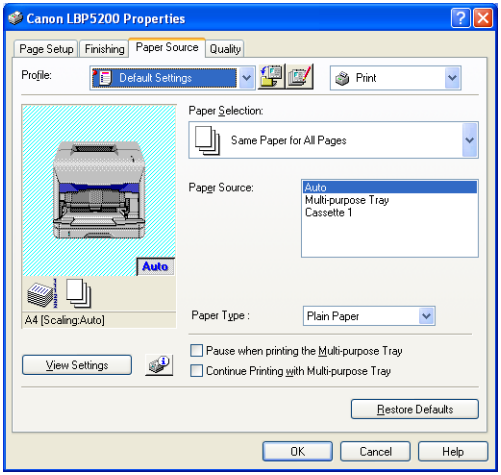

■ [Paper Selection] (See p. 4-55)

When the optional 250-sheet paper feeder is installed in the printer, you can select the paper source selection from among the following options.

- Same Paper for All Pages
- Different for First, Others, and Last
- Different for First, Second, Others, and Last
- Transparency Interleaving

■ [Paper Source] (See p. 4-55)

Allows you to specify the paper source.

When the optional 250-sheet paper feeder is installed in the printer, the paper source for each page can be selected according to the [Paper Selection] setting.

■ [Paper Type]

Specifies the type of paper you are printing on.
Set this setting as follows:

Paper Type	Printer Driver Setting
Plain Paper (64 - 105 g/m^2)	[Plain Paper]
Heavy Paper (106 - 135 g/m^2)	[Heavy Paper]
Transparency	[Transparencies]
Envelopes	[Envelope]

■ **[Pause when printing the Multi-purpose Tray]**

Determines whether the printer will pause and display a message or print without delay when feeding paper from the multi-purpose tray.

■ **[Continue Printing with Multi-purpose Tray]**

When the optional 250-sheet paper feeder is installed, this option allows you to specify whether the printer should switch the paper source to the multi-purpose tray automatically when Cassette1 runs out of paper during a print job.

[Quality] Sheet

The [Quality] sheet allows you to specify the following printing preferences:

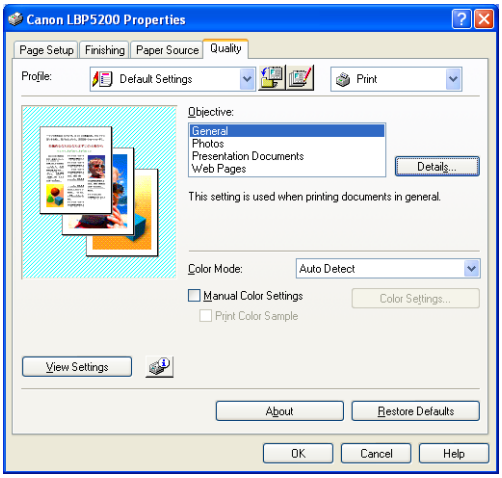

■ **[Objective] (See p. 4-56)**

Selecting the appropriate objective for the contents of the print job allows you to perform optimum printing. To specify in detail the settings for the option selected in [Objective], click [Details].

■ [Details] (See p. 4-56)

Click on [Details] to open the dialog box shown below.

This dialog box allows you to change the printing settings to meet your needs.

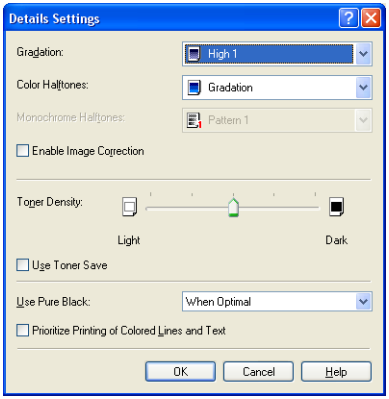

IMPORTANT

- Using the Toner Save mode may decrease print density, making printed text look patchy.
- The Toner Save mode has little effect on print data with a small printing ratio. Use this function when printing data with a large printing ratio, such as documents containing images (photos), in large quantities.

■ [Color Mode] (See p. 4-58)

Specifies whether to perform color printing or black and white printing.

■ [Manual Color Settings] (See p. 4-59)

Select this checkbox when you want to configure custom color settings. To make detailed changes to color settings, click on [Color Settings] to open the [Color Settings] dialog box.

■ [Color Settings] (See p. 4-59)

Click on [Color Settings] to open the dialog box shown below.

This dialog box provides the [Color Adjustment] sheet and the [Matching] sheet.

- [Color Adjustment] Sheet
  This sheet allows you to adjust color, brightness, and contrast settings used for printing.

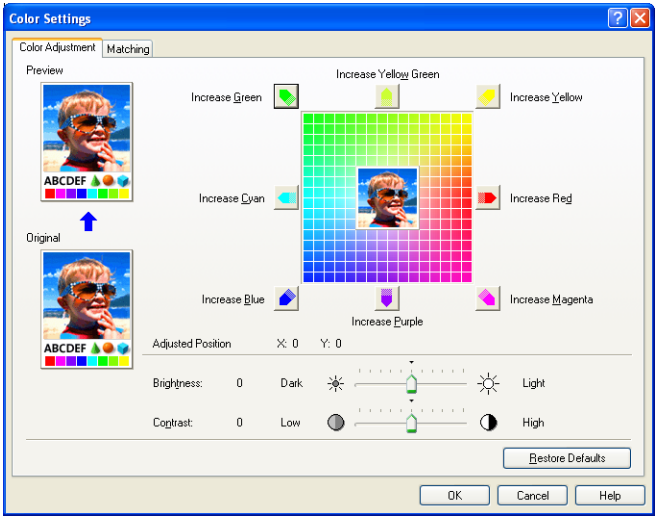

- [Matching] Sheet
  This sheet allows to specify the color correction procedures used for printing. If the printer driver is used to perform color adjustment, color adjustment is determined by the [Matching Method] and [Monitor Profile] settings. If the printer driver is not used for color adjustment, the gamma correction setting will be used to adjust color settings.

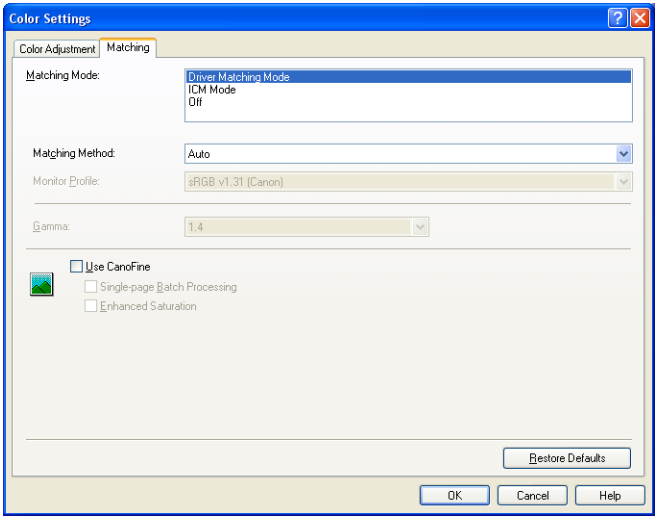

■ Print Color Sample (Windows 2000/XP/Server 2003 only)

After specifying the settings in the [Color Adjustment] sheet (which appears in the [Color Settings] dialog box), you can print a sample of the adjusted image. The adjusted image is printed in the center of the page, and this is surrounded by images where the color tone is changed by 1 unit in each of the corresponding directions.

[General] Sheet

Displays the printer name, and allows you to print a test page.

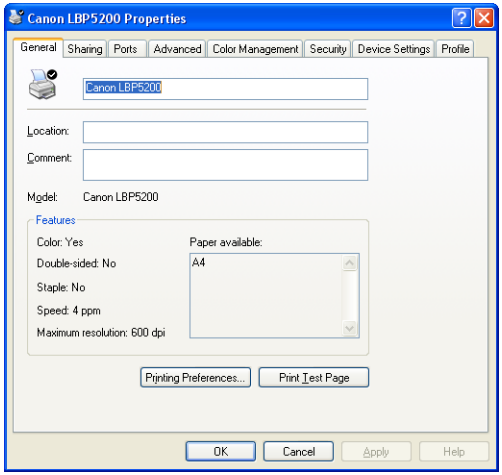

[Details] Sheet (Windows 98/Me only)

This sheet allows you to specify printer port settings, add printer drivers, modify spooling settings, and other options.

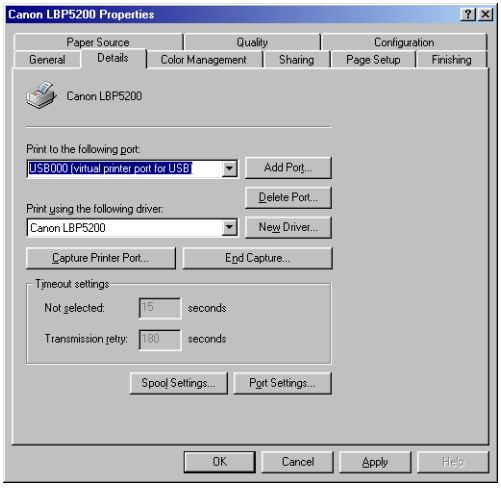

[Sharing] Sheet

This sheet allows you to specify whether or not to share the printer.

NOTE

- For Windows 98/Me, the [Sharing] sheet does not appear if [File and printer sharing for Microsoft Networks] has not been added in the network settings. (See p. 3-60)
- For Windows 2000/XP/Server 2003, the [Sharing] sheet does not appear if the network has not been configured. (See p. 3-64)

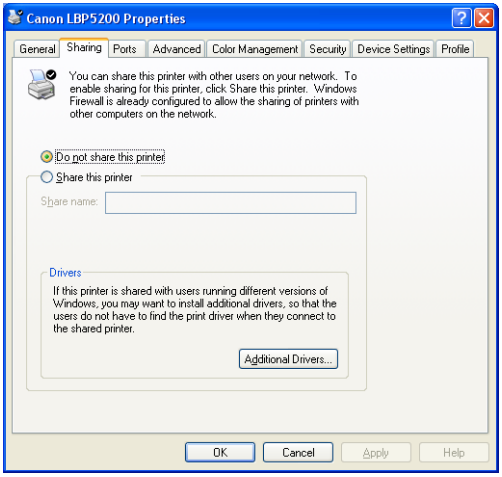

[Ports] Sheet (Windows 2000/XP/Server 2003 only)

This sheet allows you to add, delete, and configure printer ports.

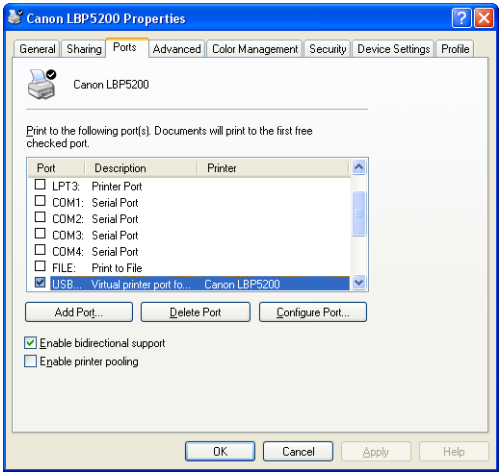

[Advanced] Sheet (Windows 2000/XP/Server 2003 only)

This sheet allows you to specify detailed printer settings, such as the times when the printer is available and spooler settings.

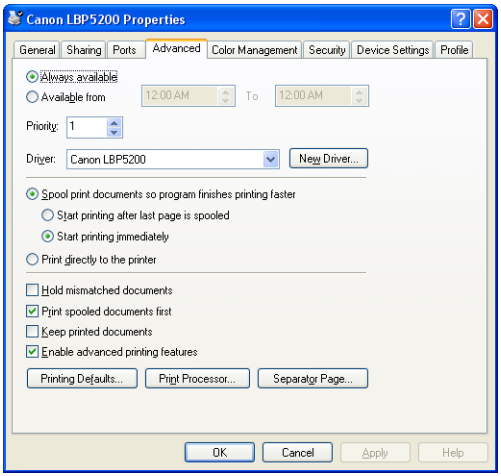

[Color Management] Sheet

Allows you to specify the settings for the printer's color profile.

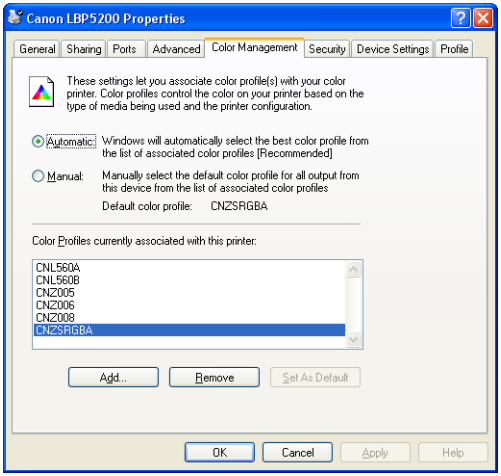

[Security] Sheet (Windows 2000/XP/Server 2003 only)

This sheet allows you to confirm the access permissions for each user.

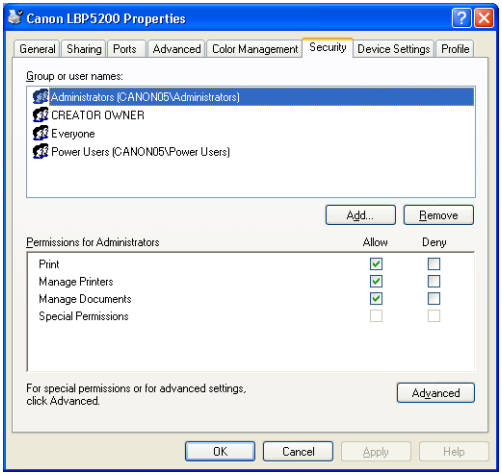

[Configuration]/[Device Settings] Sheet

The [Configuration]/[Device Settings] sheet allows you to specify the paper source options installed in the printer, when the Printer Status Window is displayed, and other settings.

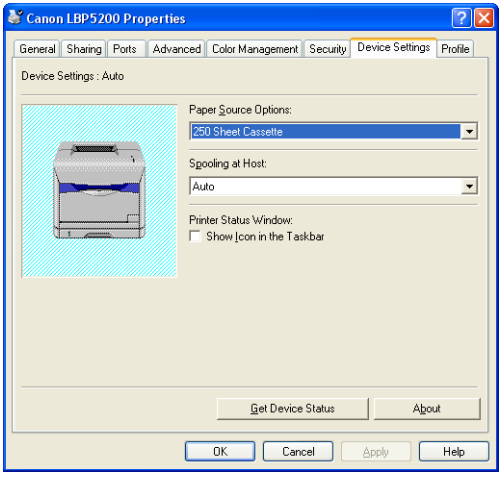

■ [Paper Source Options] (See p. 4-2)

If the optional 250-sheet paper feeder is installed in the printer, select [250 Sheet Cassette].

■ [Spooling at Host] (Windows 2000/XP/Server 2003 only)

You can specify whether spooling is performed at the Host.

■ **[Show Icon in the Taskbar] (See p. 4-74)**
When this option is checked, an icon for displaying the Printer Status Window appears in the Windows taskbar.

■ **[Get Device Status]**
Click [Get Device Status] to automatically retrieve device information, etc. from the printer and update the printer driver settings accordingly.

[Profile] Sheet (Windows 2000/XP/Server 2003 only)

This sheet allows you to create and add new "Profiles" and edit existing "Profiles".

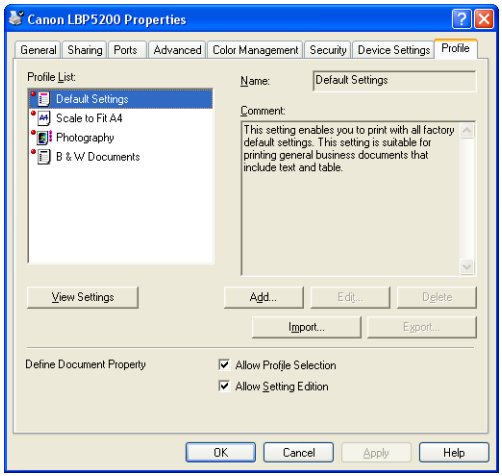

■ **[Profile List]**
Lists the available "Profiles".

■ **[Name]**
Displays the name of the "Profile" selected in [Profile List].

■ **[Comment]**
Displays a comment about the "Profile" selected in [Profile List].

■ [Add] (See p. 4-64)

Click [Add] to open the dialog box shown below.

This dialog box allows you to specify the name, icon, comment, and print settings for a newly added "Profile" or a "Profile" that you want to edit.

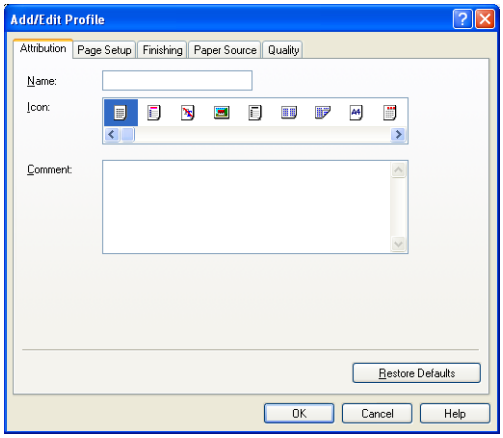

■ [Edit] (See p. 4-66)

Click [Edit] to open the dialog box shown below.

This dialog box allows you to specify the name, icon, comment, and print settings for a newly added "Profile" or a "Profile" that you want to edit.

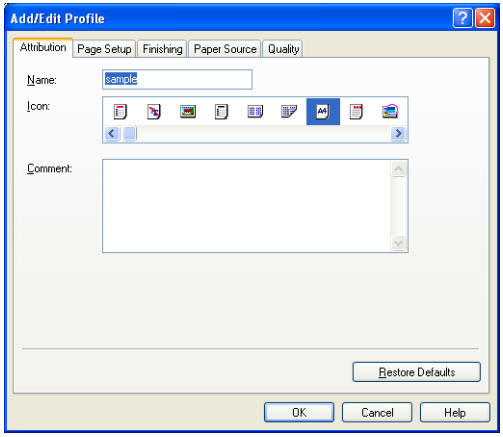

■ [Delete] (See p. 4-66)

Allows you to delete a "Profile" that you previously added.

■ [Import] (See p. 4-66)

Allows you to import a "Profile" saved as a file and add it to the printer driver.

■ **[Export] (See p. 4-66)**
Allows you to save an added or edited "Profile" as a file.

■ **[Allow Profile Selection]**
Allows you to select a "Profile" in the [Document Properties] dialog box.

■ **[Allow Setting Edition]**
Allows you to add a new "Profile" setting that is different from the "Profiles" previously registered in the [Document Properties] dialog box.

Printing Multiple Pages on One Sheet

Multiple pages can be printed on one sheet of paper.

1 **For Windows 2000/XP/Server 2003, display the [Device Settings] sheet and set [Spooling at Host] to [Auto].**

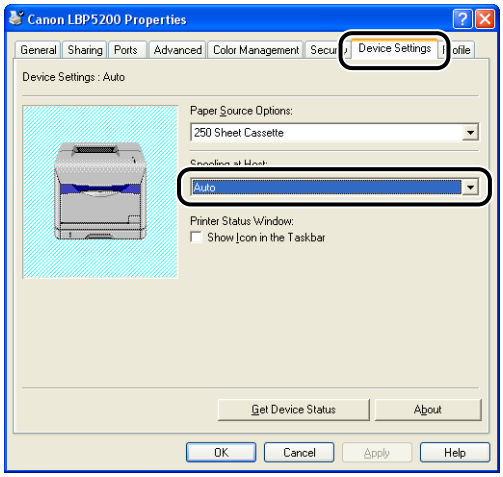

2 Display the [Page Setup] sheet, then set [Page Layout] to the number of the pages to be printed on each sheet of paper.

The number of pages that can be selected is 1, 2, 4, 6, 8, 9, or 16 (Pages per Sheet).

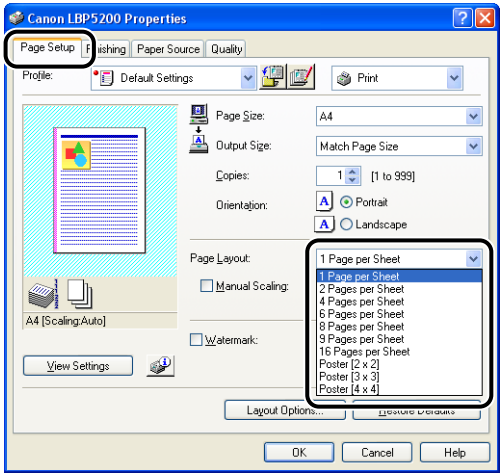

3 The [Page Order] setting is displayed if the number of pages per sheet is 2, 4, 6, 8, 9 or 16. Use this to select the order that pages are printed on each sheet.

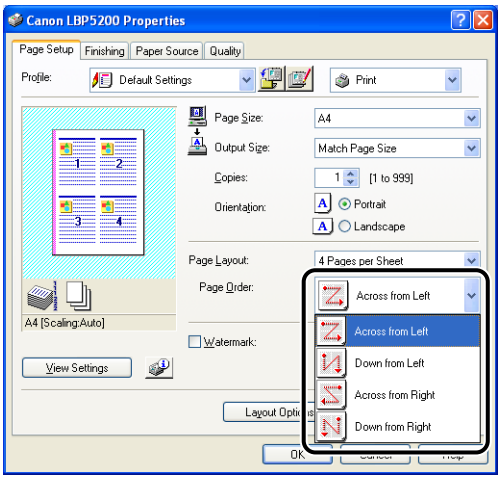

NOTE

The options in the [Page Order] drop-down list differ depending on the paper orientation and the number of pages to be printed on each sheet.

4 Verify the settings, then click [OK].

Scaling Printer Output

You can choose to scale your document if the [Page Layout] is set to [1 Page per Sheet].

The scale factor is adjusted automatically if the [Page Size] and [Output Size] settings are different.

The scale factor can also be specified manually.

You can specify a scale factor of between 25 and 200%.

Scaling a Document Automatically

1 Display the [Page Setup] sheet, and set the [Page Size].

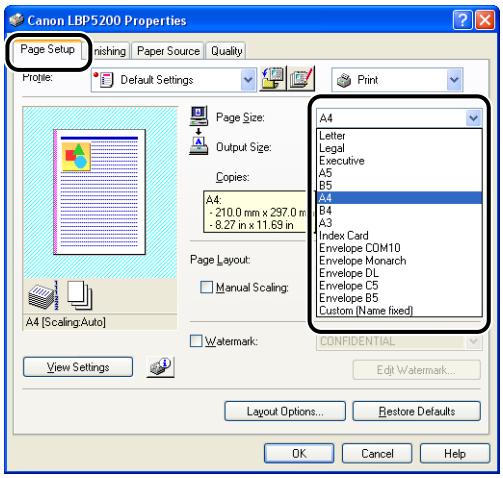

2 Specify the paper size in [Output Size].

3 Verify the settings, then click [OK].

The scale factor will be set automatically depending on the sizes specified in [Page Size] and [Output Size].

Scaling a Document Manually

1 **Display the [Page Setup] sheet, and set the [Page Size].**

2 **Specify the paper size in [Output Size].**

3 **Select [Manual Scaling], then enter the value in the spin box.**

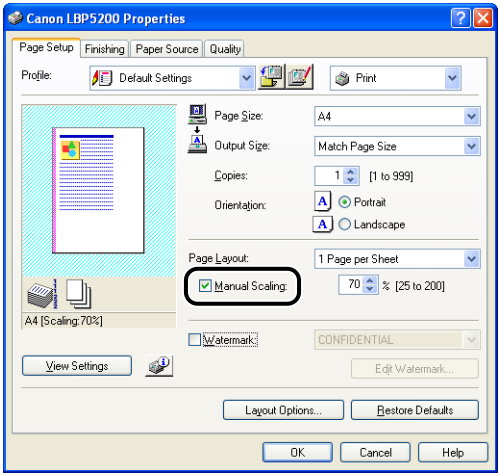

4 **Verify the settings, then click [OK].**

Poster Printing

You can magnify a single page image and print it out over several sheets of paper. You can then create a large poster-sized printout by taping the multiple sheets of paper together.

1 **For Windows 2000/XP/Server 2003, display the [Device Settings] sheet and set [Spooling at Host] to [Auto].**

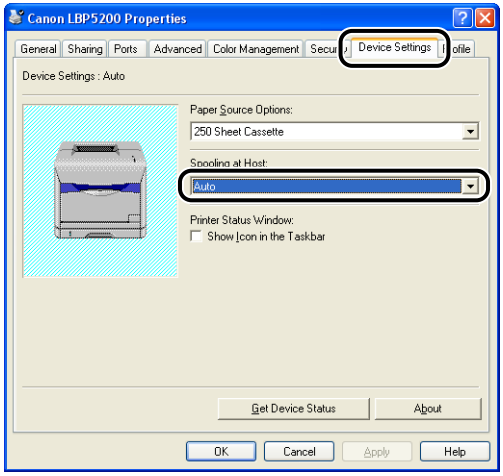

2 **Display the [Page Setup] sheet and set [Page Layout] to [Poster [N x N]] (N = 2, 3, 4).**

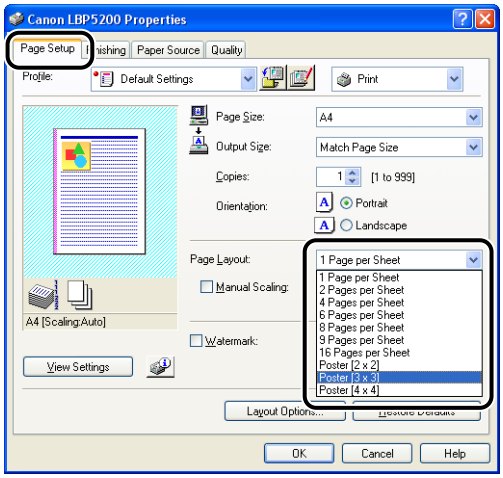

A layout image of the printout appears in the Preview panel.

3 Confirm the settings, then click [OK].

IMPORTANT

- When paper is to be output with the print side facing down, the printing order of the output (separated into multiple pages) should be "Upper Left to Right".
- When you perform poster printing, the watermark printing and layout options are disabled.
- When you perform poster printing, the [Page Order] setting is disabled.

Watermark Printing

This feature superimposes a watermark (such as "COPY", "DRAFT", or other ghosted text) during printing over a document created by an application. You can select the text string to use from the list of strings that have been setup as watermarks. Alternatively, you can click on [Edit Watermark] in the [Page Setup] sheet and create a new watermark or edit an existing watermark.

Watermark Printing

1 For Windows 2000/XP/Server 2003, display the [Device Settings] sheet and set [Spooling at Host] to [Auto].

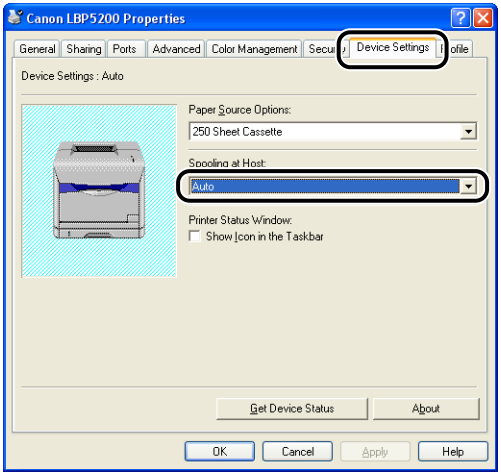

2 Display the [Page Setup] sheet and place a checkmark next to [Watermark].

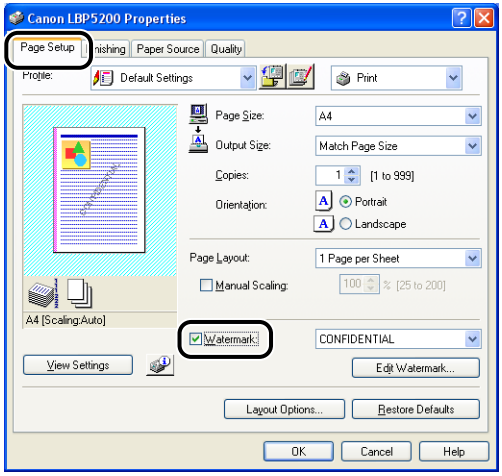

3 Select the character string to print as a watermark from the list on the right of [Watermark].

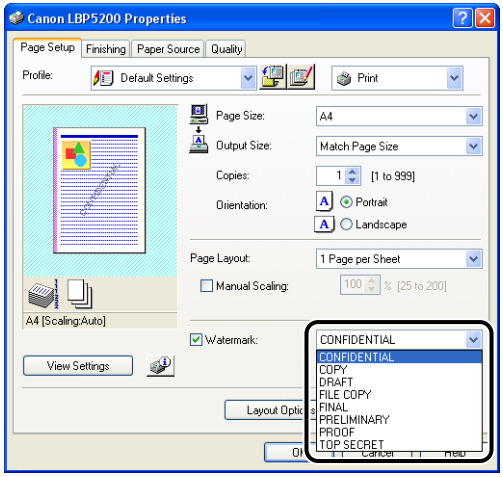

4 Confirm the settings, then click [OK].

Editing Watermarks

1 **For Windows 2000/XP/Server 2003, display the [Device Settings] sheet and set [Spooling at Host] to [Auto].**

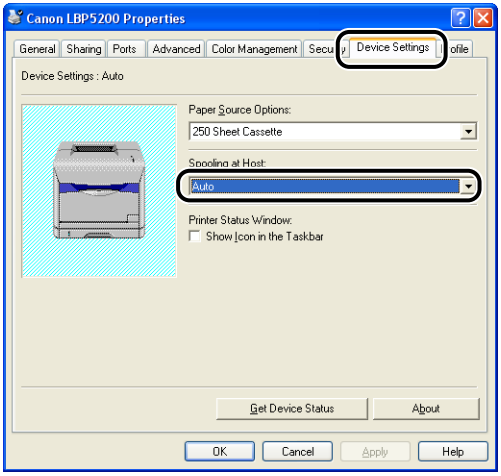

2 **Display the [Page Setup] sheet, place a checkmark next to [Watermark], and then click [Edit Watermark].**

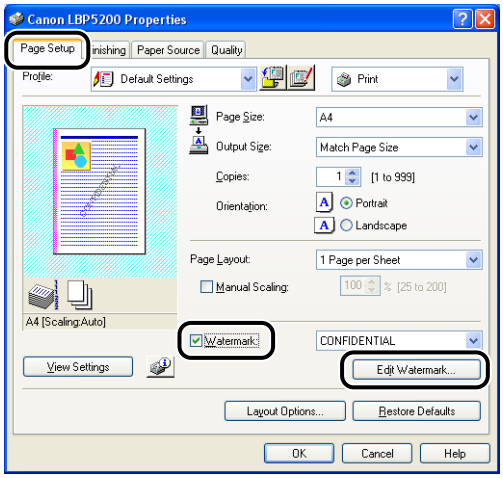

The [Edit Watermark] dialog box is displayed.

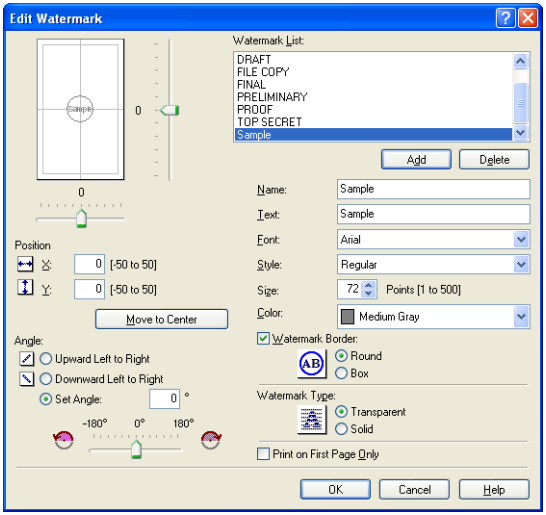

3 Specify the following items as needed:

[Position]:	Specify the position to print the selected watermark on the document. Enter X and Y axis values between -50 and 50.
[Angle]:	Specify the angle to print the selected watermark on the document.
[Name]:	Enter a name for the watermark which will be displayed in the [Watermark] list in the [Page Setup] sheet.
[Text]:	Enter the characters to be printed as the watermark.
[Font]:	Select the font to be used for the watermark (True Type fonts only).
[Style]:	Select the font style for the watermark.
[Size]:	Specify the font size for the watermark.
[Color]:	Specify the color for the watermark.
[Watermark Border]:	Specify whether a border encloses the watermark when printed.
[Watermark Type]:	Select the watermark type from [Transparent] or [Solid].
[Print on First Page Only]:	Select this checkbox to print the watermark only on the first page of the document.

NOTE

- Click [Add] to create a new watermark.
- You cannot modify the default watermarks.

4 Confirm the settings, then click [OK].

The [Page Setup] sheet reappears.

Specifying Custom Paper (Non-Standard Paper)

It is possible to configure custom paper sizes.

NOTE

To specify a custom paper size, open the following dialog box.

- For Windows 2000/XP/Server 2003
  Open the [Server Properties] dialog box from the [Printers and Faxes] folder (the [Printers] folder for Windows 2000).
- For Windows 98/Me
  Open the [Printer Properties] dialog box from the [Printers] folder.

■ *For Windows 98/Me*

1 Display the [Page Setup] sheet, then click [Custom Paper Size].

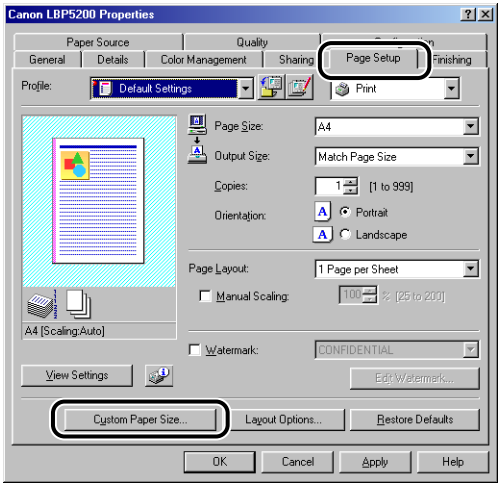

The [Custom Paper Size Settings] dialog box is displayed.

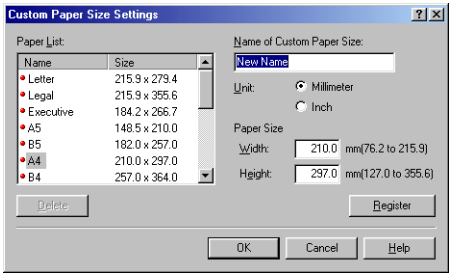

2 Specify the following items as needed:

[Paper List]:	Displays the names and sizes of standard paper and added custom paper.
[Name of Custom Paper Size]:	Enter a name to use for the new custom paper size.You can enter a maximum of 31 characters.
[Unit]:	Select the units (millimeters or inches) to be used when entering the custom paper size.
[Paper Size]:	Specifies the length and width of the custom paper size (length greater than or equal to width). Paper sizes should be specified for portrait orientation (length greater than or equal to width) and within the user-definable limits.

3 Click [Register].

NOTE

On Windows 98/Me, a maximum of 30 custom paper sizes can be defined.

4 Confirm the settings, then click [OK].

■ *For Windows 2000/XP/Server 2003*

1 Open the [Printers and Faxes] folder ([Printers] folder on Windows 2000), then select [Server Properties] from the [File] menu.

The [Printer Server Properties] dialog box will appear.

2 Display the [Forms] sheet, then check [Create a New Form]. Specify the following options as needed.

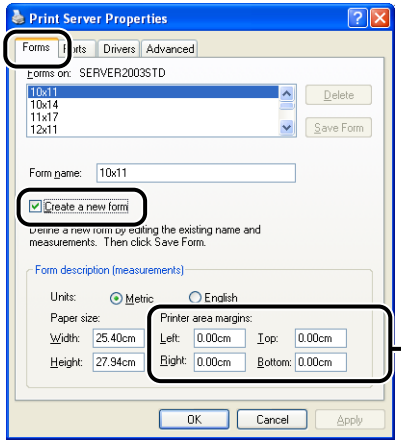

Make sure to set the margin to a value in the range of 0.5 cm to 5.0 cm.

[Form Name]:	Allows you to enter a name for the custom paper size. ([Form Description for] is displayed on Windows 2000.)
[Units]:	Select from either [Metric] or [English].
[Paper Size]:	Specifies the length and width of the custom paper size (length greater than or equal to width). Paper sizes should be specified in portrait orientation (length greater than or equal to width) and within the user-definable limits. The valid range of settings for this printer are width: 7.62 to 21.59 cm and length: 12.70 to 35.56 cm.
[Printer area margins]:	Enter a numerical value. The valid range of settings for this printer are between 0.5 cm and 5.0 cm.

3 After confirming the settings, click [Save Form], and then click [Close].

Printing Borders and The Date

You can print borders, the date of printing, and/or page numbers on each document.

1 **For Windows 2000/XP/Server 2003, display the [Device Settings] sheet and set [Spooling at Host] to [Auto].**

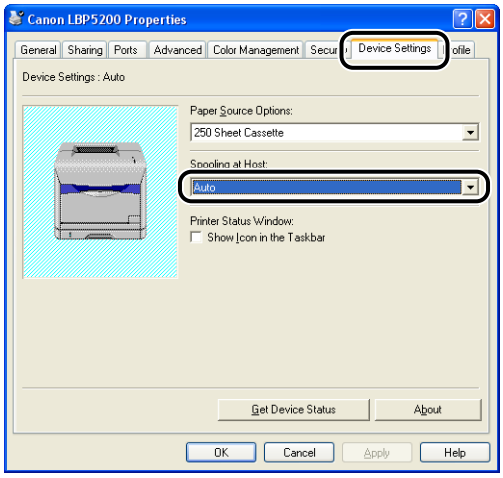

2 **Display the [Page Setup] sheet, then click [Layout Options].**

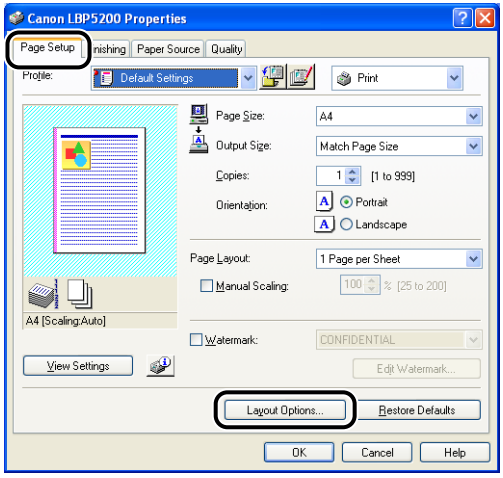

The [Layout Options] dialog box is displayed.

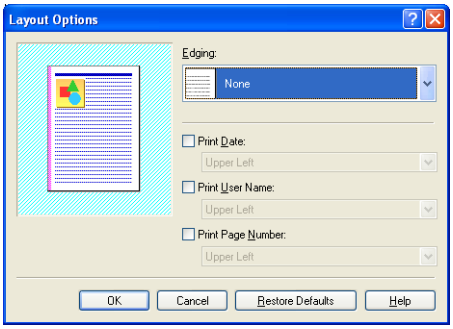

3 Configure the following items as necessary:

[Edging]:	Select the type of edging to print as a border.
[Print Date]:	Prints the date. Choose the position to print the date from the list.
[Print User Name]:	Prints the name of the user as registered in the computer. Choose the position to print the user name from the list.
[Print Page Number]:	Prints page numbers. Choose the position to print the page numbers from the list.

4 Verify the settings, then click [OK].

The [Page Setup] sheet reappears.

Gutters

You can create a gutter on the documents that you print. The gutter width can be set to between 0 and 30 mm.

If you use the gutter settings, the printed images will be shifted to create an additional margin along the specified edge. You can select whether the page image will be reduced to account for this margin or not.

1 **Display the [Finishing] sheet, set the [Binding Location] to the edge along which the gutter is to be located, and then click [Gutter].**

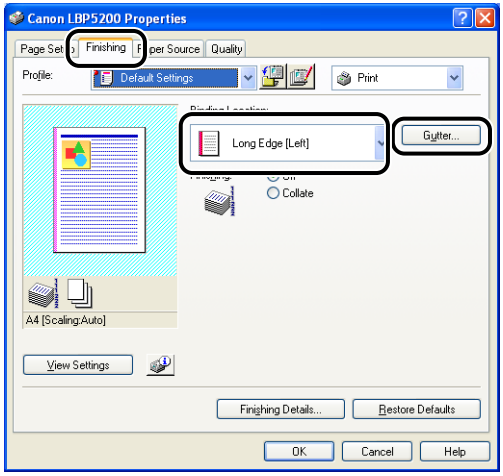

The [Gutter Settings] dialog box will appear.

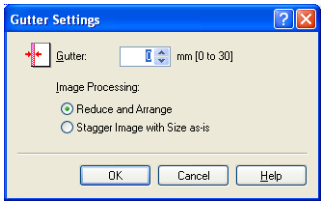

2 Specify the value in the spin box.

Configure the following items as necessary:

[Image Processing]: If you use the gutter settings, the printed images will be shifted to create an additional margin along the specified edge. You can select whether the page image will be reduced to account for this margin or not. If you select [Reduce and Arrange], the page image will be automatically reduced slightly so that the image will not protrude out of printable area when the image is shifted. If you choose [Stagger Image with Size as-is], the page image will be shifted without being reduced. Any part of the page image that extends outside of the printable area will be lost from the printout.

3 Verify the settings, then click [OK].

The [Finishing] sheet reappears.

Specifying the Finishing Method

You can specify a variety of print processing options.

1 Display the [Finishing] sheet, then click [Finishing Details].

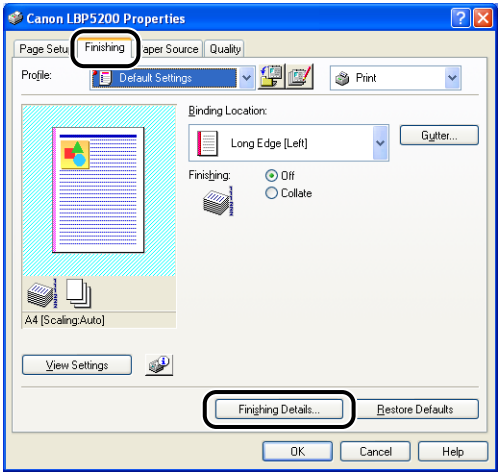

The [Finishing Details] dialog box is displayed.

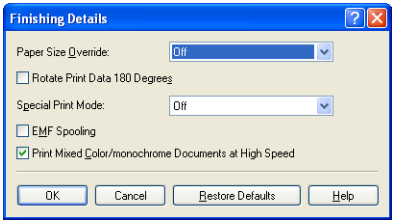

2 Configure the following items as necessary:

[Paper Size Override]:	Specify this option when Letter size pages are printed on A4 size paper or A4 size pages are printed on Letter size paper.
[Rotate Print Data 180 Degrees]:	Rotates the document by 180 degrees while printing. This function can be used to print on envelopes, index card and other material that can only be fed to the printer in one specific direction.
[Special Print Mode]:	Depending on the paper you are using and the environment where you are using the printer, printing quality may be reduced. The [Special Print Mode] property provides a number of settings for resolving problems related to printing quality.
[EMF Spooling] (Windows 2000/XP/ Server 2003 only):	Specifies whether to spool print data in EMF (metafile) format. If this option is selected, print data is spooled in EMF format.
[Print Mixed Color/monochrome Documents at High Speed]:	Specify this option when printing data that contains a mixture of color pages and black-and-white pages. Checking this box may increase the printing speed of mixed color/black-and-white documents.

3 Verify the settings, then click [OK].

The [Finishing] sheet reappears.

Specifying the Paper Feed Method

You can choose from a variety of options for selecting the paper source.

1 Display the [Paper Source] sheet.

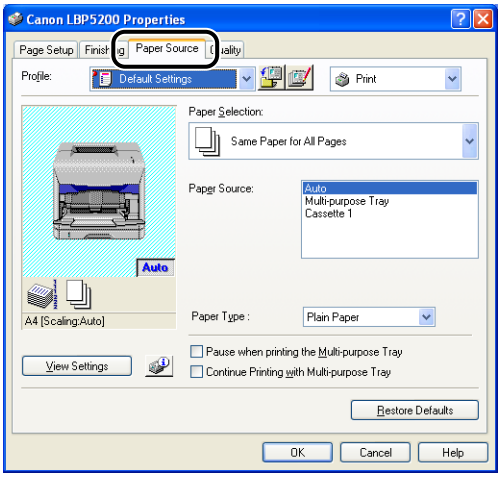

2 Configure the following items as necessary:

[Paper Selection]:	You can only choose the paper selection method when the optional 250-sheet paper feeder is installed.
[Paper Source]: - [First Page] - [Second Page] - [Other Pages] - [Last Page] - [Interleaf Sheet]	You can only choose the paper sources when the optional 250-sheet paper feeder is installed. The options that are available depend on the option selected in the [Paper Selection] setting.
[Paper Type]:	Specifies the type of paper to be used.
[Pause when printing the Multi-purpose Tray]:	Allows you to specify whether the printer should pause a print job and display a message or print without waiting when using paper from the multi-purpose tray.
[Continue Printing with Multi-purpose Tray]:	Specifies whether the printer should switch the paper source to the multi-purpose tray automatically when Cassette1 runs out of paper during a print job. You can only choose this option when the optional 250-sheet paper feeder is installed.

3 Verify the settings, then click [OK].

Specifying the Print Quality

You can achieve optimum printing results by simply selecting the appropriate option from the [Objective] list in the [Quality] sheet.

1 Display the [Quality] sheet, then select the [Objective] setting.

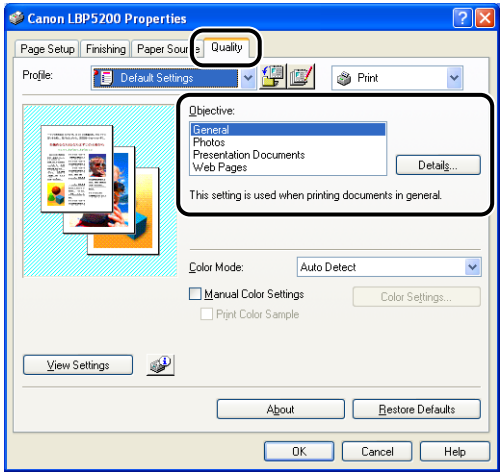

For more detailed settings, click the [Details] button.

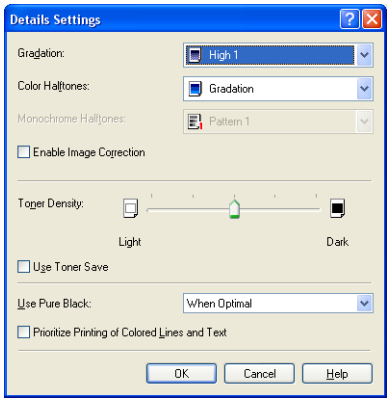

The [Details Settings] dialog box will appear.

2 Configure the following items as necessary:

[Gradation]:	Allows you to select gradation settings when you print images in halftones.
[Color Halftones]:	Allows you to select the dither pattern to use when printing data in color halftones.
[Monochrome Halftones]:	Allows you to select the dither pattern to use when printing data in monochrome halftones.
[Enable Image Correction]:	If you enlarge image data such as photographs and graphics using an application and then print it, the images tend to become coarse and jagged. Select this option to smooth out this kind of low resolution data while printing.
[Toner Density]:	Adjusts the density of printed toner. This setting affects the toner density of all 4 toner colors (CMYK).
[Use Toner Save]:	By using this function, you can reduce the toner consumption of the printer by thinning out the data that is printed.
[Use Pure Black]:	Specifies whether to perform gray compensation or not. Gray compensation makes black and gray data print reliably in black and gray. Select the subject of gray compensation from the list.
[Prioritize Printing of Colored Lines and Text]:	Check this box when color lines or text appear patchy or broken.

3 Verify the settings, then click [OK].

Selecting the Color Mode

1 Display the [Quality] sheet.

2 Set the [Color Mode] to the appropriate setting.

[Black and White]:	Prints in black and white, even for color print data.
[Full Color]:	Prints in four color CMYK (Cyan, Magenta, Yellow and Black).
[Auto Detect]:	Automatically chooses between color and black and white printing depending on the type of document.

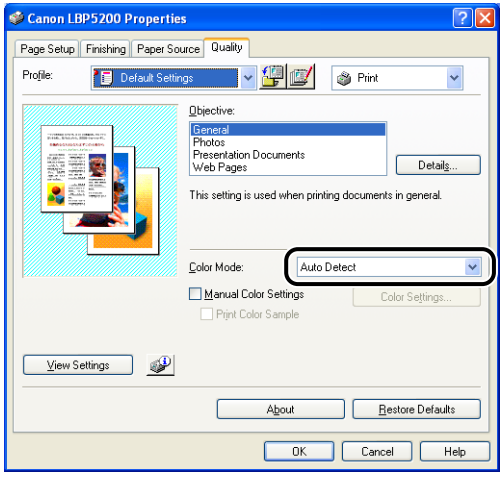

IMPORTANT

When [Auto Detect] is selected, some black-and-white pages may be printed in [Full Color].

3 Confirm the settings, then click [OK].

Color Settings

1 Display the [Quality] sheet, check [Manual Color Settings], and then click [Color Settings].

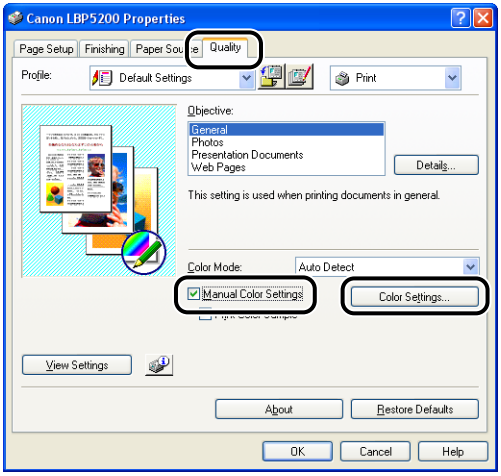

The [Color Settings] dialog box will appear.

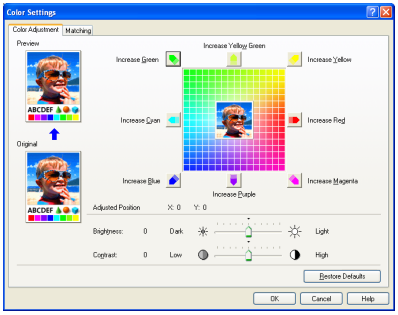

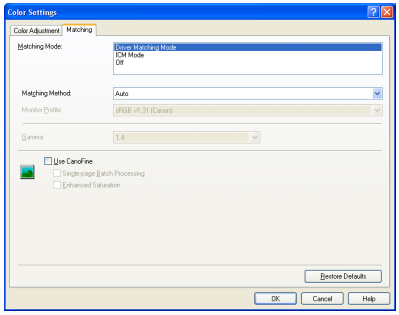

2 Display the [Color Adjustment] sheet, then specify the following options as needed.

Adjustment Grid:	Adjust the colors by moving the [Preview Image] at the center of the Adjustment Grid from side to side or up and down.
[Brightness]:	Adjusts the brightness level used for printing. Drag the [Brightness] slider left or right to adjust the brightness.
[Contrast]:	Adjusts the contrast level used for printing. Drag the [Contrast] slider left or right to adjust the contrast.

3 Display the [Matching] sheet, then specify the following items as needed:

[Matching Mode]:	Specifies the color correction method.
[Matching Method]:	Specifies which elements take priority during matching.
[Monitor Profile]:	Select the appropriate option for the monitor or scanner in use.
[Gamma]:	When the [Matching Mode] is set to [Off], colors are adjusted by brightness without performing matching.
[Use CanoFine] (Windows 2000/XP/Server 2003 only):	Select this option when you are using CanoFine.
[Enhanced Saturation] (Windows 2000/XP/Server 2003 only):	Performs CanoFine processing to enhance the vividness of the document. This can only be selected if [Use CanoFine] is selected.
[Single-page Batch Processing] (Windows 2000/XP/Server 2003 only):	Performs CanoFine processing by treating all of the bitmap data on a page as a single piece of data. This can only be selected if [Use CanoFine] is selected.

4 Verify the settings, then click [OK].

The [Quality] sheet reappears.

Printing Color Samples (Windows 2000/XP/Server 2003 only)

After adjusting settings in the [Color Adjustment] sheet, you can print a sample of the adjusted image. The adjusted image is printed in the center of the page, and this is surrounded by images where the color tone is changed by 1 unit in each of the corresponding directions. This is useful for comparing the effects of adjustments with the actual output.

1 **For Windows 2000/XP/Server 2003, display the [Device Settings] sheet and set [Spooling at Host] to [Auto].**

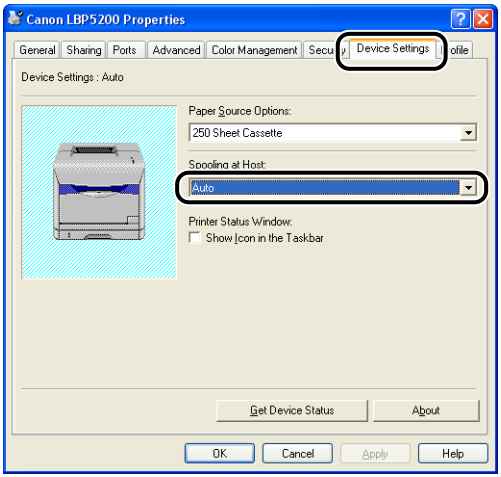

2 Display the [Quality] sheet and check [Manual Color Settings], and then click [Color Settings].

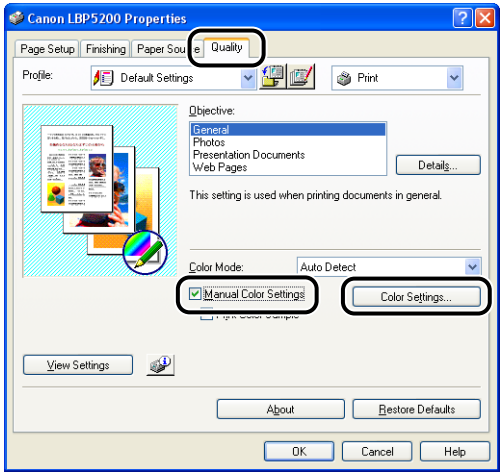

3 Specify the options in the [Color Settings] dialog box as needed, then click [OK].

4 Return to the [Quality] sheet and check [Print Color Sample].

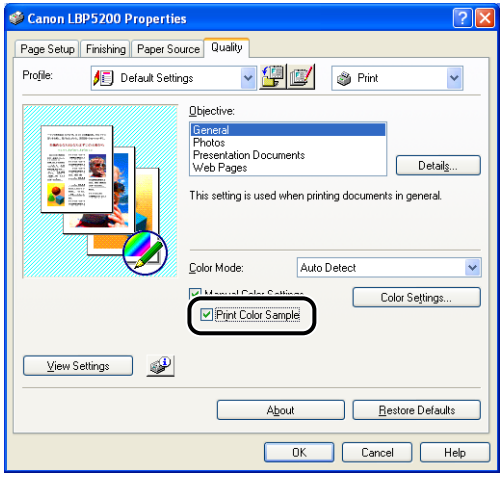

5 Confirm the settings, then click the [OK] button.

IMPORTANT

When printing color samples, make sure that the [Page Layout] is set to [1 Page per Sheet] in the [Page Setup] sheet.

6 Click [OK] or [Print].

The color sample will start to print.

IMPORTANT

After printing the color samples, clear the [Print Color Sample] checkbox.

Working with Profiles

Profiles make it possible to save or import all the printing preferences specified in the [Page Setup], [Finishing], [Paper Source], and [Quality] sheets at once. It is also possible to add, edit and choose between profiles.

Use the following procedure to save the printing preferences as a "Profile".

Make sure that one of the [Page Setup], [Finishing], [Paper Source] or [Quality] sheets is displayed before starting following procedure.

NOTE

- If you are using Windows 98/Me, up to 50 profiles can be created. However, if [Users can customize their preferences and desktop settings. Windows switches to your personal settings when you log on.] is selected in the [User Profiles] sheet of the Windows password settings (double-click [My Computer] → [Control Panel] → [Passwords]), then you can create up to 50 profiles for each user.
- If you are using Windows 2000/XP/Server 2003, up to 50 profiles can be created for each user account.
- If you change the name of the printer, any saved profiles will become unreadable. If you restore the printer name to the original value, you will be able to read the profiles again.
- Profile information files saved on Windows 98/Me cannot be used on Windows 2000/XP/Server 2003 and vice versa.
- Selecting a profile does not change the [Page Size] setting.

Adding a Profile

1 **Click [ ] (Add Profile).**

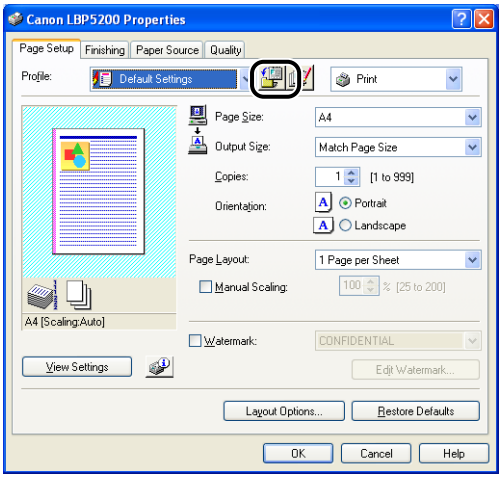

The [Add Profile] dialog box is displayed.

2 Enter the name of the profile in the [Name] textbox.

You can select an icon for the profile using the [Icon] setting. If you have any notes you want to make about the profile, enter them in the [Comment] field.

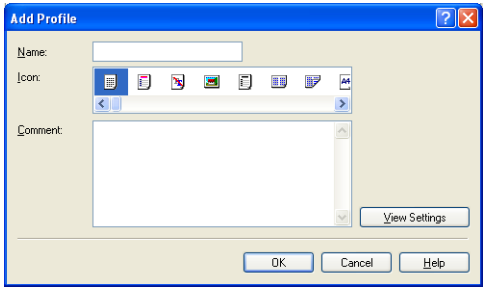

NOTE

You can enter up to 31 characters in the [Name] field and up to 255 characters in the [Comment] field.

● Checking Profile Settings

❑ Click [View Settings].

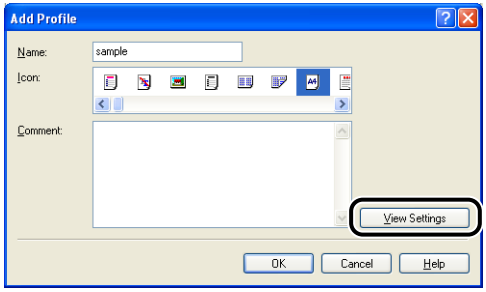

❑ Click [OK] to return to the [Add Profile] dialog box.

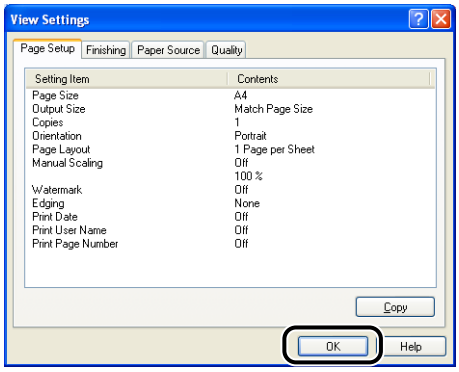

3 Click [OK].

The Properties dialog box reappears.

Check that the name of the profile you created is in the [Profile] list.

Editing/Deleting a Profile

You can modify or save profile data, or delete a profile from the [Profile List].

1 Click [ ] (Edit Profile).

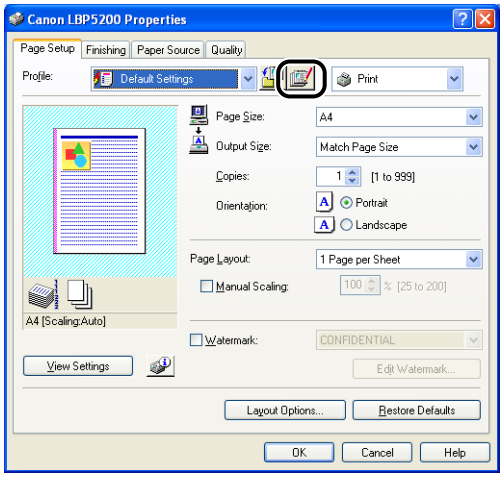

The [Edit Profile] dialog box is displayed.

2 Edit the profile data.

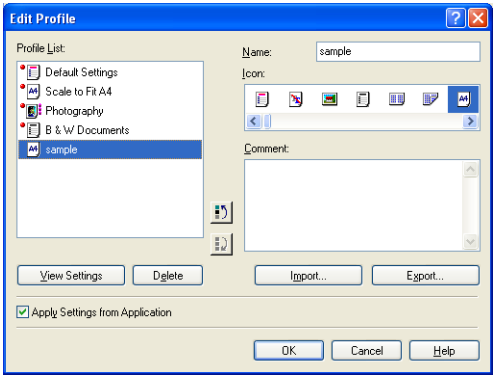

● Editing a Profile

- ❑ You can change the [Name], [Icon], and [Comment] settings.
- ❑ You can change the order of the selected profile by clicking [ ] and [ ].
- ❑ Click [Import] to import profile data from a previously saved file.
- ❑ Click [Export] to save the data from the currently selected profile to a file. If you save a profile to disk, you will be able to use it again even after you delete it from the list of profiles.
- ❑ If the [Apply Settings from Application] checkbox is ticked, the [Page Size], [Orientation] and [Copies] selected in the application will be used for printing. Even if you change these settings in the profile, the values from the application will still be used.

● Deleting a Profile

- ❑ Click [Delete] to delete the profile from the list of profiles.

IMPORTANT

You can only delete custom profiles. The pre-installed default profiles cannot be deleted. You are also unable to delete a profile if it is currently selected on any of the property sheets.

Editing Print Jobs with PageComposer

PageComposer allows you to combine 2 or more print jobs into a single job for printing, or modify the printer settings of combined jobs for printing. Even print jobs from different applications can be edited with PageComposer.
In addition, PageComposer allows you to preview print jobs on the screen.

Make sure that one of the [Page Setup], [Finishing], [Paper Source], or [Quality] sheets is displayed in the [Document Properties] dialog box, then perform the following procedure:

1 **Select [Edit and Preview] from the list on the right of the [Profile] drop-down list.**

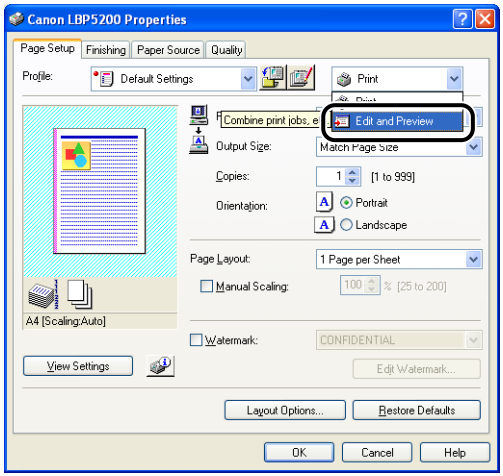

2 **A message is displayed telling you that the output method is going to be switched to [Edit and Preview] mode. Click [OK].**

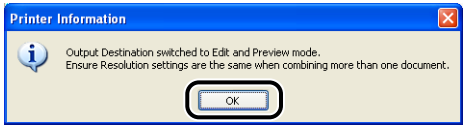

3 Adjust the settings in each sheet, then click [OK].

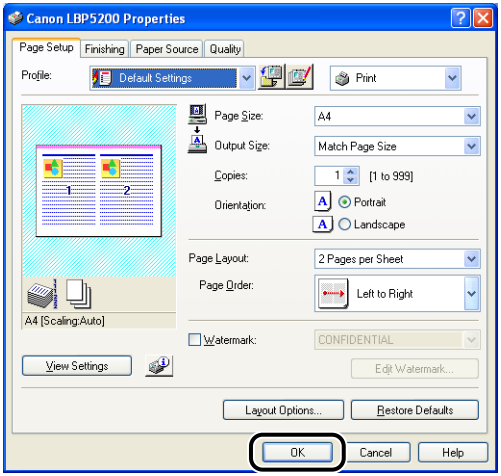

4 Click [OK] or [Print].

The [Canon PageComposer] dialog box is displayed and the job is displayed in a list.

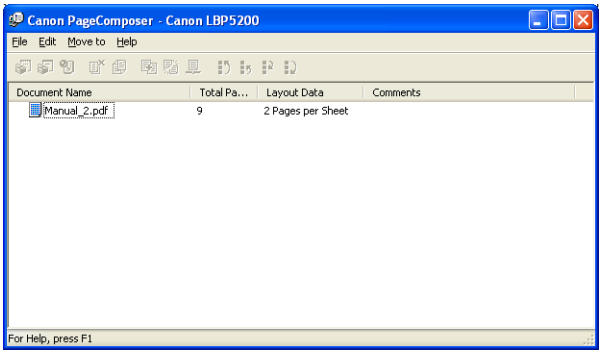

5 Repeat steps 1 to 4 for each of the jobs that you want to edit.

6 Edit the jobs in the list in the [Canon PageComposer] dialog box.

NOTE

- For more details on adjusting settings in the [Canon PageComposer] dialog box, refer to the online help for Canon PageComposer.

- If [Edit and Preview] mode is selected in the [Printer Properties] dialog box and [ ] (Lock) is also selected, the [Canon PageComposer] dialog box appears every time you print.

Viewing Printer Settings/Restoring the Default Settings

You can view a summary of the printing preferences specified in the [Page Setup], [Finishing], [Paper Source], [Quality], and [Configuration]/[Device Settings] sheets, or restore the settings to their default values.

Make sure that one of the [Page Setup], [Finishing], [Paper Source] or [Quality] sheets is displayed, then perform the following procedure.

NOTE

A preview is displayed on each sheet. You can use the preview to verify the printed image.

Viewing Printer Settings

1 Click [View Settings].

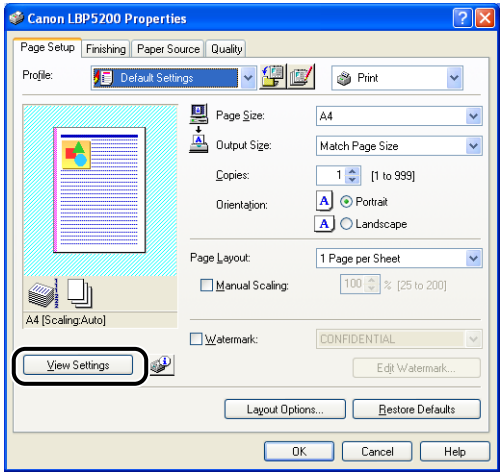

The [View Settings] dialog box is displayed.

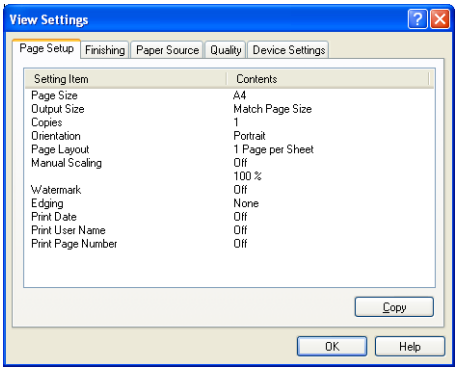

By clicking the [Page Setup], [Finishing], [Paper Source], [Quality], or [Configuration]/[Device Settings] tab, you can view a list of printing preferences for each sheet.

2 Click [OK].

The previous sheet reappears.

Restoring the Default Settings

To restore the default settings, click [Restore Defaults].

The [Restore Defaults] button only restores to default the settings that are displayed on the same sheet or dialog box as the button.

The settings in the [Page Setup], [Finishing], [Paper Source], [Quality] and [Configuration]/[Device Settings] sheets cannot be restored all at once to the default settings.

Printer Status Window

The Printer Status Window shows status information about the LBP5200 (such as operating status and job information) using messages, animations, sounds, and icons.

NOTE

In order to make use of the sounds, your computer must have a PCM synthesizer, and have the driver for the PCM synthesizer installed.

Using the Printer Status Window

The functionality of the Printer Status Window is the same on both Windows 98/Me and Windows 2000/XP/Server 2003.

For more details on using the Printer Status Window, refer to the online help.

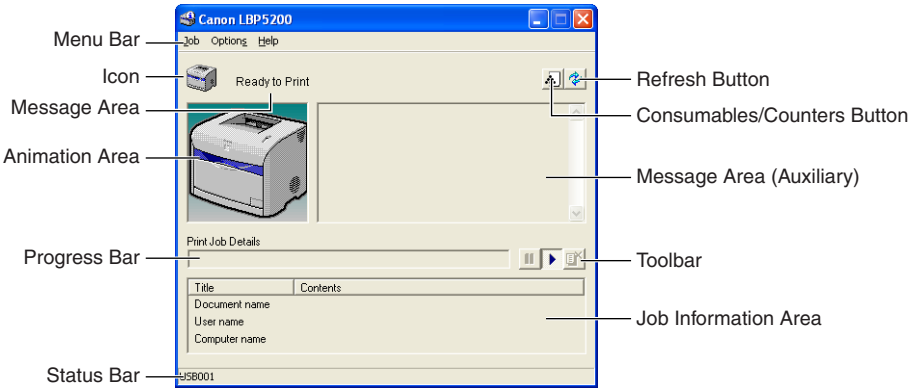

■ Menu Bar

[Job] Menu	Used to pause, resume and cancel print jobs. The job menu appears grayed out if you do not have access permissions to the current print job.
[Options] Menu	Allows you to change the preferences for the Printer Status Window, display various information, and perform calibration of the printer.
[Help] Menu	Displays the online help.

■ Other Functions

Icon	Displays an icon representing the current printer status.
Message Area	Displays the current printer status using a short message.
Message Area (Auxiliary)	Displays additional information when an error occurs, etc.
Animation Area	Displays a graphical representation of the current printer status. The background color is normally blue, but changes to orange when the printer requires some kind of attention, and to red during a warning.
Consumables/Counters Button	This button opens the [Consumables/Counters] dialog box. The dialog box displays icons and messages about the life of each of the color toner cartridges and the drum cartridge. The total number of pages printed is also displayed.
Refresh Button	Retrieves the current printer status and updates the Printer Status Window accordingly.
Progress Bar	Indicates the progress of the current print job by showing the number of pages printed and by changing the background color.
Toolbar	Used to pause, resume and cancel print jobs. The buttons appears grayed out if you do not have access permissions to the current print job.
Job Information Area	Displays the document name, user name, and computer name for the print job.
Status Bar	Indicates how the printer is connected (Local or Network). Descriptions of each of the menu items are displayed here as you navigate through the menus.

Displaying the Printer Status Window

The Printer Status Window can be opened in the following two ways.

- Click [ ] (Display Printer Status Window) in locations such as the [Page Setup] sheet in the [Printer Properties] dialog box.

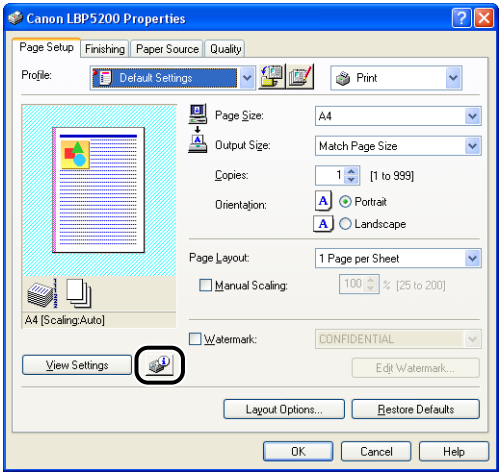

- Check the [Show Icon in the Taskbar] box in the [Configuration]/[Device Settings] sheet in the [Printer Properties] dialog box. A Printer Status Window icon is then shown in the Windows taskbar, and you can click on this icon, then click [Canon LBP5200] to open the window.

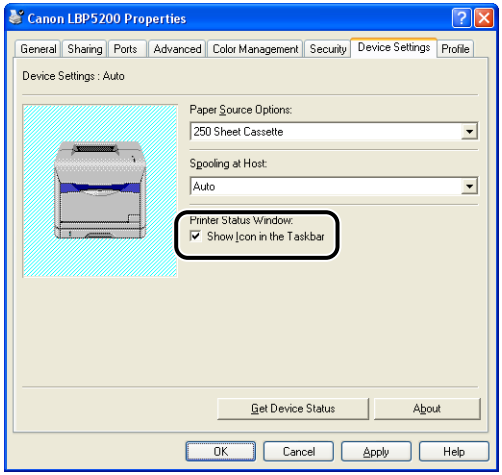

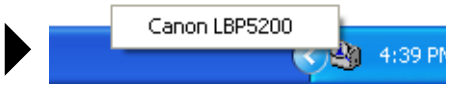

The Printer Status Window is automatically displayed during printing and if an error occurs. If [Display Printer Status Window] is not set to [When Starting Printing] in the Printer Status Window preferences, the Printer Status Window will not be displayed during printing.

Setting Preferences

The Preferences dialog box allows you to display the Printer Status Window automatically, specify the sound settings, and make the Printer Status Window monitor the printer status.

■ [Display Printer Status Window] Options

- [When Starting Printing]
  The Printer Status Window appears automatically each time printing starts.
- [Only when Errors Occur]
  The Printer Status Window appears automatically only when an error occurs during printing.
- [Always Display on Top]
  The Printer Status Window is always on top of all the other windows on the desktop.

■ [Monitor Printer Status] Options

- [Always]
  The Printer Status Window always monitors the printer status.
- [Only while Printing]
  The Printer Status Window only monitors the printer status during printing.
- [Only while Displaying Printer Status Window]
  The Printer Status Window monitors the printer status only while it is displayed.

■ [Tone Settings] Options

- [Enabled All]
  A sound is played whenever a message is displayed.
- [Enable only when Error Occurs]
  A sound is played only when an error occurs.
- [Disabled]
  No sounds are played.

1 Select [Preferences] from the [Options] menu.

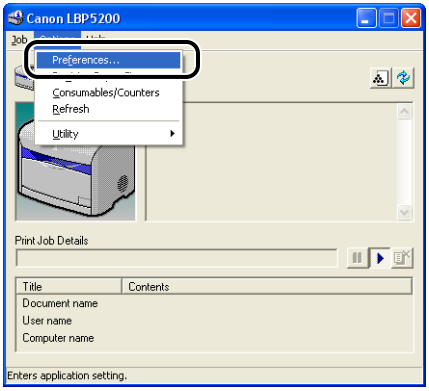

The [Preferences] dialog box is displayed.

2 Confirm each of the settings, then click [OK].

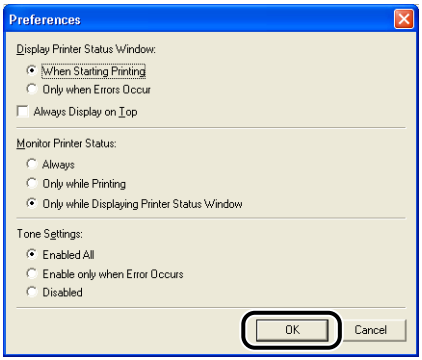

NOTE

For detailed information on using the Printer Status Window, refer to the online help.

[Register Paper Size] Menu Item

Because the printer's paper cassette cannot automatically detect paper sizes, you need to notify the printer of the size of paper loaded in the optional 250-sheet paper feeder (Cassette 1).

IMPORTANT

As you cannot update the paper size while printing is in progress, check that the printer is idle before registering the paper size. You can register the paper size while one of the following messages is displayed.

- Printing Paused
- Specified Paper Incorrect
- Out of Paper
- No XXX in Cassette 1. (where XXX is a paper size)

1 Select [Register Paper Size] from the [Options] menu.

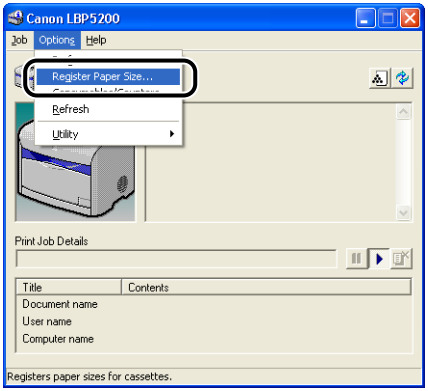

The [Register Paper Size] dialog box will appear.

2 From [Cassette 1] list, select the size of paper loaded in the paper cassette, then click [OK].

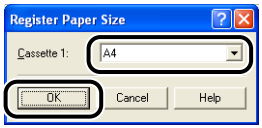

[Consumables/Counters] Menu Item

Select [Consumables/Counters] from the [Options] menu to display the [Consumables/Counters] dialog box. The dialog box displays icons and messages about the life of each of the color toner cartridges and the drum cartridge.

You can also open the [Consumables/Counters] dialog by clicking [ ] (Consumables/Counters) in the Printer Status Window.

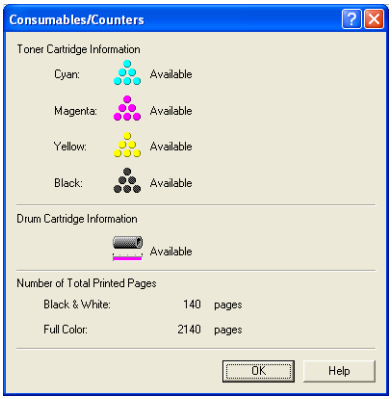

[Refresh] Menu Item

Select [Refresh] from the [Options] menu to retrieve the current printer status information and update the Printer Status Window display.

You can also refresh the display by clicking [ ] (Refresh) in the Printer Status Window.

[Utility] Menu Item

The [Utility] menu item allows you to calibrate the printer and to clean the fixing roller.

■ Cleaning

If black dot-shaped smudges appears on the front or back surfaces of printed paper, the fixing roller needs to be cleaned. Cleaning the roller prevents printing problems from occurring. Refer to "Cleaning the Fixing Roller," on p. 5-33 for more details.

■ Calibration

Calibration is automatically performed every 12 hours or each time 800 images (Full color print: 200 pages; Monochrome print: 800 pages) are printed. However, you can perform calibration manually when the color has changed. Refer to "Calibrating the Printer," on p. 5-30 for more details.

Displaying Printer Status When Using a Print Server

The status of a network printer can be displayed on the client's Printer Status Window as well as on the print server's.

If the print server is not running when the Printer Status Window starts up, the status will appear automatically when the print server starts up.

- Printer Status at the Print Server
  - Displays the status of local print jobs and of client print jobs.
  - You can pause, resume, and cancel a print job.
  - Sounds are also played.
  - If the print server is running Windows 2000/XP/Server 2003, the printer status is not displayed when no one is logged on.
- Printer Status at the Client
  - Clients can pause, resume, and cancel a print job.
  - Sounds are only played if the username or computer name matches the client.

NOTE

To display the printer status when printing a job over the network, a network environment that uses one of the following protocols is required.
- TCP/IP
- NetBEUI

Routine Maintenance

5
CHAPTER

This chapter describes the procedures for maintaining the printer such as replacing the cartridges and cleaning the printer.

Replacing Toner Cartridges 5-2
When a Message Appears 5-2
The [Consumables/Counters] Dialog Box 5-4
Replacing Toner Cartridges 5-6
Precautions for Handling Toner Cartridges 5-13
Storing Toner Cartridges 5-15
Replacing the Drum Cartridge 5-17
When a Message Appears 5-17
The [Consumables/Counters] Dialog Box 5-18
Replacing the Drum Cartridge 5-20
Precautions for Handling the Drum Cartridge 5-27
Storing Drum Cartridges 5-29
Calibrating the Printer 5-30
Cleaning the Fixing Roller 5-33
Cleaning the Printer 5-37
Moving the Printer 5-39
Handling the Printer 5-46
Precautions for Handling the Printer 5-46
Precautions for Storing the Printer 5-47

Replacing Toner Cartridges

This section describes how to replace and handle toner cartridges and gives precautions for storing them.

Contact the store where you purchased the printer to obtain replacement toner cartridges.

When a Message Appears

Toner cartridges are consumable parts. When a toner cartridge is nearing the end of its life, a message will appear in the Printer Status Window. Take the following steps depending on this message.

Message	When it is Displayed	Description and Actions to Take
Cartridge(s) may need to be replaced soon. For details, check the [Consumables/ Counters] dialog.	A toner cartridge or the drum cartridge needs to be replaced soon.	• You can continue to print. • Check which cartridge(s) need to be replaced in the [Consumables/Counters] dialog box. If a toner cartridge is nearly ready to be replaced, buy a new toner cartridge. • It is recommended that you replace the toner cartridge before printing a large amount of data.
Replacement of toner cartridge(s) is required (<toner colors>*). * Yellow, magenta, or cyan will appear in place of <toner colors>. (More than one color may appear.)	One of the toner cartridges (other than black) has reached the end of its life.	• You can only perform black and white printing. • If you are going to print in color, you will need to replace the toner cartridge for the indicated color with a new one.

Message	When it is Displayed	Description and Actions to Take
Toner Cartridge Replacement Required. The lifetime of the toner cartridge(s) has been reached (<toner colors>*). Replace the toner cartridge after pressing the toner replacement key and opening the cover. * Black, yellow, magenta, or cyan will appear in place of <toner colors>. (More than one color may appear.)	The black toner cartridge has reached the end of its life.	• Stop the printer as printing cannot continue. • Replace the displayed color of toner cartridge with a new one.

IMPORTANT

If your printouts are faded or patchy, this may be due to a toner cartridge reaching the end of its life, even if you haven't seen any messages. Once the printing quality deteriorates, replace the toner cartridge with a new one without using it any further.

NOTE

The lifetimes of the toner cartridges (Canon Genuine Parts) used in this printer are given below. Page counts are for A4 or Letter size paper at 5% page coverage using the factory default print density setting. The level of toner consumption varies depending on the type and content of documents printed. Because documents that contain few areas of white space, such as figures, tables and graphs, consume larger amounts of toner, toner cartridge life will be reduced if you print large amounts of this kind of document.

- For the toner cartridges that are included with the printer
  - Black: Approx. 5,000 pages
  - Yellow: Approx. 2,000 pages
  - Magenta: Approx. 2,000 pages
  - Cyan: Approx. 2,000 pages
- For replacement toner cartridges
  - Black: Approx. 5,000 pages
  - Yellow: Approx. 4,000 pages
  - Magenta: Approx. 4,000 pages
  - Cyan: Approx. 4,000 pages

The [Consumables/Counters] Dialog Box

The [Consumables/Counters] dialog box in the Printer Status Window can be used to estimate when toner cartridges will need to be replaced. The state of each of the different color toner cartridges is displayed in the [Consumables/Counters] dialog box.

Displaying the [Consumables/Counters] Dialog Box

1 Open the Printer Status Window.

For details on opening the Printer Status Window, refer to "Displaying the Printer Status Window," on p. 4-74.

2 Click [ ] (Consumables/Counters) in the Printer Status Window.

The [Consumables/Counters] dialog box can also be displayed by selecting [Consumables/Counters] from the [Options] menu.

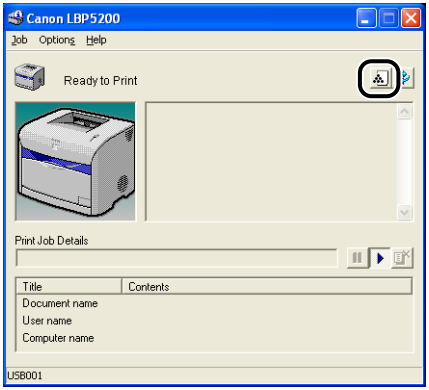

The [Consumables/Counters] dialog box will appear.

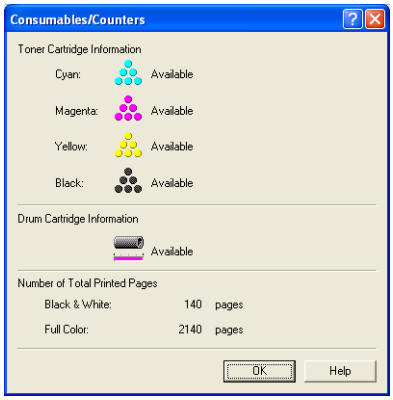

The meanings of the icons are as follows. (The black toner cartridge is used as an example.)

Icon	Meaning
	Continue using as normal.
	The toner cartridge is nearing the end of its life. Buy a replacement toner cartridge.
	The toner cartridge has reached the end of its life. Replace the toner cartridge.
	The toner cartridge has not been installed.

Replacing Toner Cartridges

When the message [Toner Cartridge Replacement Required] appears in the Printer Status Window, replace the toner cartridge of the indicated color with a new toner cartridge.

WARNING

Do not put spent toner cartridges into a fire. Any toner remaining in the toner cartridge may ignite, causing burns or fire.

CAUTION

Be careful to avoid staining your clothes or hands with toner. If you do get any toner on your clothes or hands, wash it off immediately with cold water. If you rinse using hot water the toner may become fixed, creating a stain that cannot be removed.

IMPORTANT

Only use toner cartridges that are designed for this printer.

1 Press (Toner Replacement) for 2 seconds.

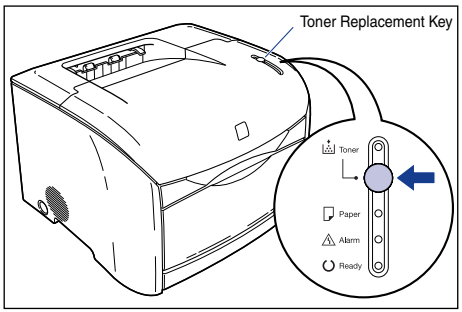

The toner cartridge holder will rotate, moving the spent toner cartridge to a position where it can be removed.

2 Open the top cover of the printer when the sound of printer operation stops.

Hold the grip on the top cover and open it until it stops.

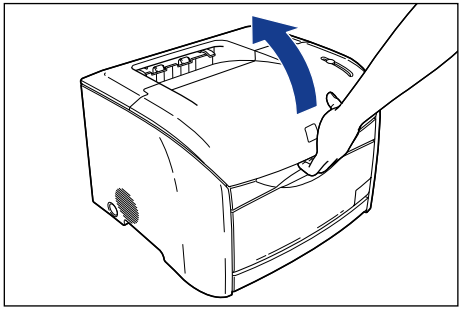

3 Make sure that the toner cartridge you want to replace is in the replacement position.

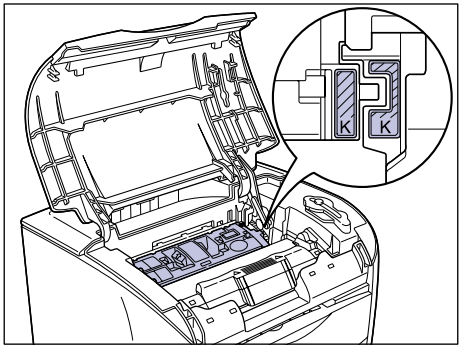

If the toner cartridge you want to replace is not in the replacement position, close the top cover of the printer and wait for the sound of printer operations stops, then open the cover again. Continue to open and close the top cover until the toner cartridge you want to replace has moved into the replacement position.

4 Remove the toner cartridge from the printer.

Hold the grip on the toner cartridge and lift it straight up.

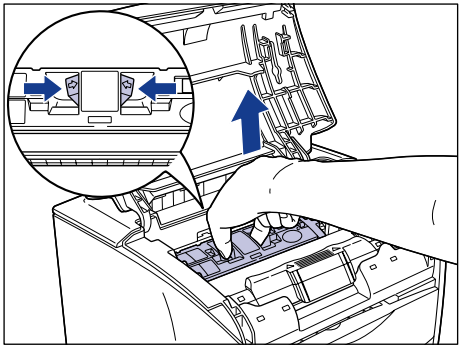

5 Confirm the color of the label on the toner cartridge holder, then take out a toner cartridge of the same color from its protective bag.

Use scissors to open the protective bag so as not to damage the toner cartridge.

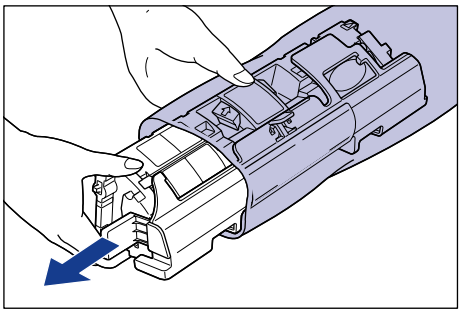

IMPORTANT

- Do not throw away the toner cartridge protective bag. You will need this bag when you remove the toner cartridge for printer maintenance, etc.
- Be careful not to hold or touch sensitive areas such as the sensor or electrical contacts. Doing so may damage the toner cartridge or printer.

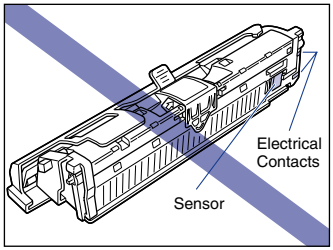

6 Hold the toner cartridge as shown in the figure, tilt it gently 5 or 6 times from side to side ①, then back and forth ② to distribute the toner evenly inside the cartridge.

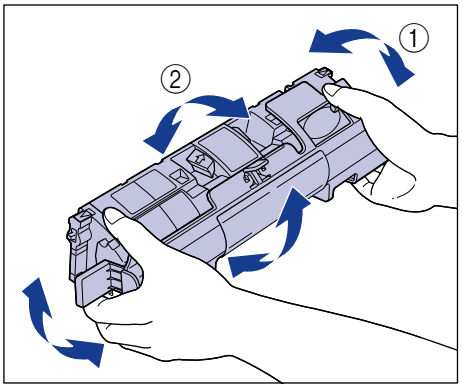

IMPORTANT

- If the toner is not distributed evenly, you may get poor printing quality. Make sure you perform this step.
- Rotate the toner cartridge gently. If you do not rotate the cartridge gently, toner may spill out.

7 Remove the protective cover.

Grasp the protective cover and remove it as shown in the figure.

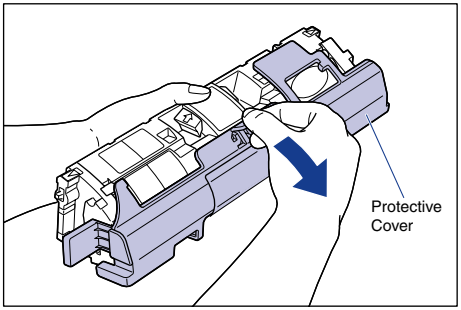

IMPORTANT

- Do not hold or touch the developing roller. Doing so will degrade the printing quality. Do not jolt the toner cartridge memory or bring it near a magnetic field. Doing so may damage the toner cartridge.

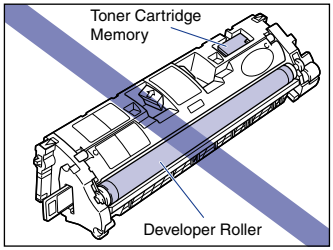

- Do not throw the protective cover away. You will need this cover when you remove the toner cartridge for printer maintenance, etc.

8 Place the toner cartridge on a flat surface, then slowly pull out the sealing tape (approx. 45 cm in length) while supporting the toner cartridge.

To pull out the sealing tape, grasp the tab at the end of it and pull it straight out in the direction of the arrow.

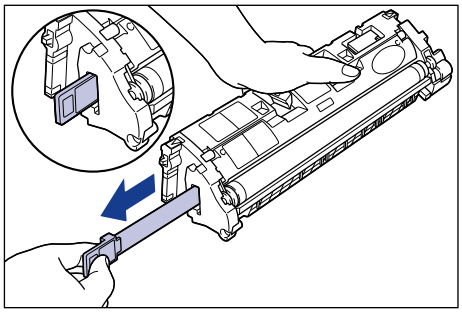

CAUTION

If you pull on the sealing tape with excessive force or stop pulling midway, toner may spray from the tape. If toner gets into your eyes or mouth, wash it off immediately with cold water and consult a doctor.

IMPORTANT

- Do not bend the tape or pull it up or down. If you do, the sealing tape may break in the middle, and you won't be able to fully remove it.

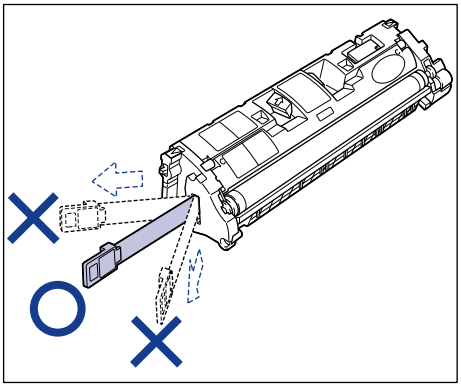

- Keep pulling on the tape until it is fully removed from the cartridge. If any sealing tape is left inside the toner cartridge, you may experience printing problems.
- Dispose of the sealing tape according to local regulations.

9 Hold the grip on the toner cartridge, and install it in the printer.

Align the triangular mark on the toner cartridge with the triangular mark on the printer when you insert the toner cartridge.

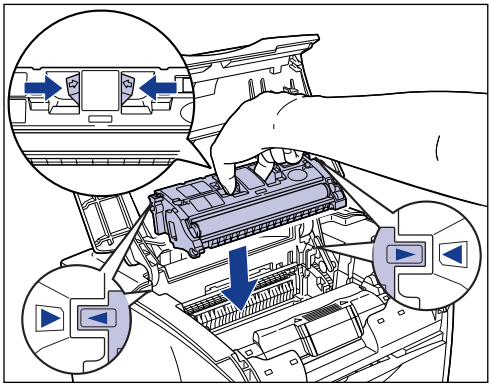

When the toner cartridge is installed properly, the labels on the toner cartridge and the toner cartridge holder will line up as shown in the figure.

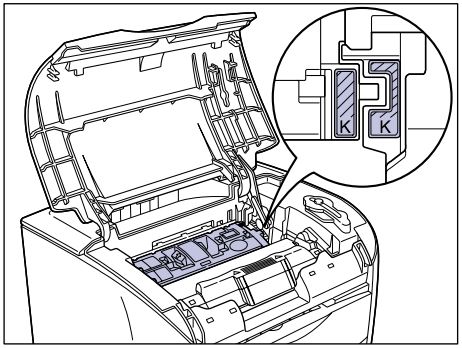

10 Close the top cover.

Hold the grip on the top cover and close it gently.

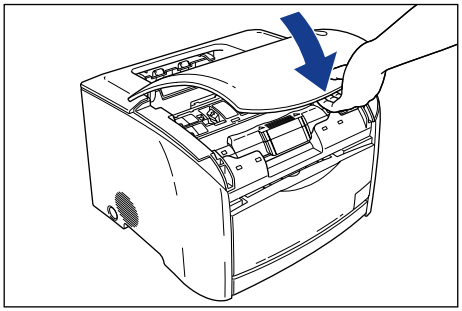

The toner cartridge holder will rotate automatically.

IMPORTANT

Even when you are using new toner cartridges, toner may adhere to the toner cartridges and the areas around the toner cartridges when you open and close the top cover. This has no effect on printer operation, printing quality, or toner consumption, and the printer can be used as it is.

11 Press (Toner Replacement) for 2 seconds after the sound of printer operation stops.

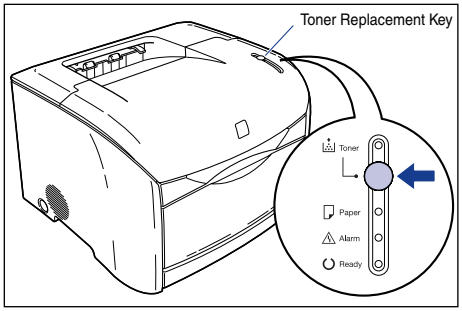

The Toner lamp will turn off after a short period of time, and the Ready lamp (blue) will come on.

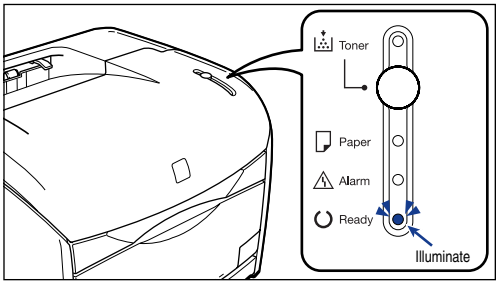

Precautions for Handling Toner Cartridges

The toner cartridges are composed of light-sensitive components and intricate mechanical components. Handling the cartridges roughly can damage them or cause deterioration of printing quality. Whenever you are installing or removing toner cartridges, take care of the following handling precautions.

WARNING

Do not put spent toner cartridges into a fire. Any toner remaining in the toner cartridge may ignite, causing burns or fire.

CAUTION

Be careful to avoid staining your clothes or hands with toner. If you do get any toner on your clothes or hands, wash it off immediately with cold water. If you rinse using hot water the toner may become fixed, creating a stain that cannot be removed.

IMPORTANT

- Never expose the toner cartridge to direct sunlight or strong light.

- If a toner cartridge is removed from the printer during maintenance, attach the protective cover immediately and place it in the protective bag that it came in or wrap it in a thick cloth.

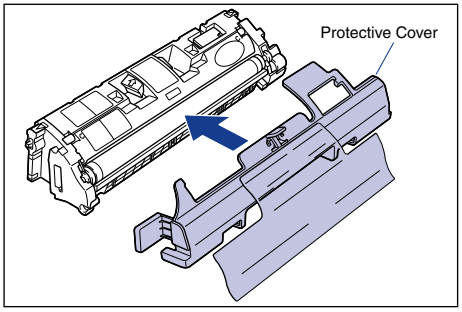

- Be careful not to hold or touch sensitive areas such as the sensor or electrical contacts. Doing so may damage the toner cartridge.

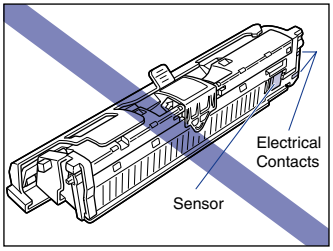

- Do not hold or touch the developing roller. Doing so will degrade the printing quality. Do not jolt the toner cartridge memory or bring it near a magnetic field. Doing so may damage the toner cartridge.

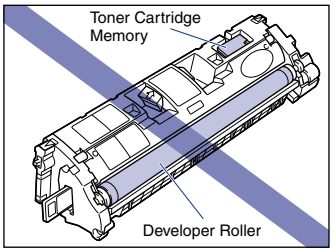

- When handling a toner cartridge, hold it properly as shown in the figure. Do not stand it on its end, or turn it upside down.

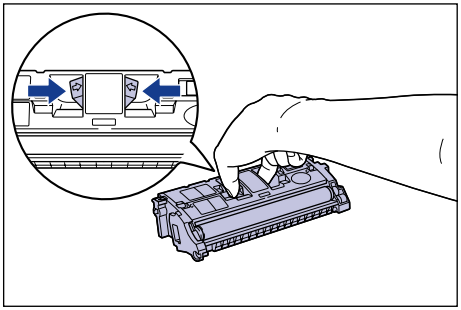

- Do not attempt to disassemble or modify the toner cartridge.
- If you expose a toner cartridge to rapid changes in temperature, droplets of water (condensation) may form on the interior and exterior of the cartridge. If a new toner cartridge that has been stored in a cool location is going to be installed in a warm area, leave the cartridge for two or more hours without opening the protective bag to allow the cartridge to adjust to the surrounding temperature before opening the bag.
- Be sure to use new toner cartridges before the expiration date indicated on the package.

Storing Toner Cartridges

Take care of the following points when storing a new toner cartridge or handling a toner cartridge that has been taken out of the printer for maintenance or to move the printer.

IMPORTANT

- Do not take a new toner cartridge out of the protective bag until you are ready to use it.
- If a toner cartridge is removed from the printer during maintenance, attach the protective cover immediately and place it in the protective bag that it came in or wrap it in a thick cloth.

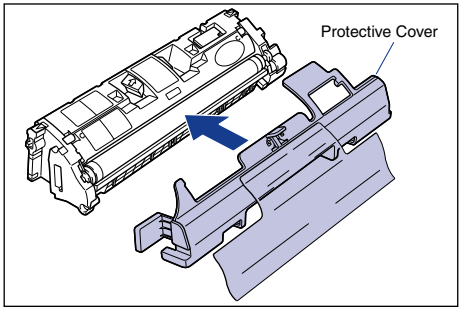

- Do not stand it on its end, or turn it upside down. Store the cartridge in the same direction as when it is installed in the printer.
- Do not store the toner cartridge in a place exposed to direct sunlight.

- Do not store a cartridge in a hot or humid place, or a place where the temperature and humidity can change rapidly.
  Storing temperature range: 0 to 35˚C (32 to 95˚F)
  Storing humidity range: 35 to 85% RH (no condensation)
- Do not store the toner cartridge in a place where corrosive gases, such as ammonia, are generated, or where a considerable amount of salt is contained in the air, or where there is a lot of dust.
- Keep the toner cartridge out of reach of small children.

■ Condensation

Even when the humidity is within the storage range, water droplets may form on the inside or outside of the toner cartridge due to temperature differences with the surrounding air. This condensation will have a bad effect on the performance of the toner cartridge.

Replacing the Drum Cartridge

This section describes the precautions for replacing, handling, and storing drum cartridges.

Contact the store where you purchased the printer to obtain replacement drom cartridges.

When a Message Appears

The drum cartridge is a consumable part. When the drum cartridge is nearing the end of its life, a message will appear in the Printer Status Window. Take the following steps depending on this message.

Message	When it is Displayed	Description and Actions to Take
Cartridge(s) may need to be replaced soon. For details, check the [Consumables/ Counters] dialog.	A toner cartridge or the drum cartridge needs to be replaced soon.	• You can continue to print. • Check which cartridge(s) need to be replaced in the [Consumables/Counters] dialog box. If the drum cartridge is nearly ready to be replaced, buy a new drum cartridge. • It is recommended that you replace the drum cartridge before printing a large amount of data.
Drum Cartridge Replacement Required	The drum cartridge has reached the end of its life.	• Stop the printer, as you cannot continue printing. • Replace the drum cartridge with a new cartridge.

NOTE

The lifetime of the drum cartridge used by this printer (Canon Genuine Parts) is given below. The number of pages may be lower depending on printer settings and preferences.

- Color print: Approx. 5,000 pages when printing on A4 or Letter size paper.
- Black and white print: Approx. 20,000* pages when printing on A4 or Letter size paper.

* This is the number of pages of A4 size plain paper that were printed under Canon standard testing conditions. Depending on the intermittency of printing, paper types and paper sizes, the number of pages possible may be half this number. (The intermittency of printing refers to the amount of printing in a fixed period.)
The following is a rough guide to drum cartridge lifetimes under intermittent printing.
4 pages at a time: Approx. 19,000 pages
2 pages at a time: Approx. 13,500 pages

The [Consumables/Counters] Dialog Box

The [Consumables/Counters] dialog box in the Printer Status Window can be used to estimate when the drum cartridge will need to be replaced. The state of the drum cartridge is displayed in the [Consumables/Counters] dialog box.

Displaying the [Consumables/Counters] Dialog Box

1 Open the Printer Status Window.

For details on opening the Printer Status Window, refer to "Displaying the Printer Status Window," on p. 4-74.

2 Click [ ] (Consumables/Counters) in the Printer Status Window.

The [Consumables/Counters] dialog box can also be displayed by selecting [Consumables/Counters] from the [Options] menu.

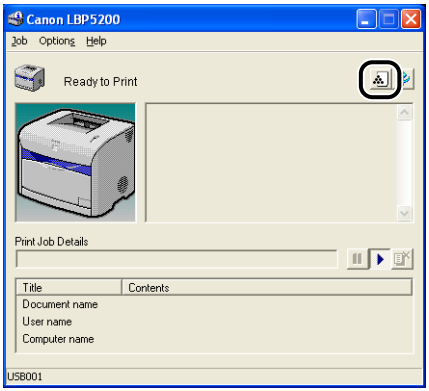

The [Consumables/Counters] dialog box will appear.

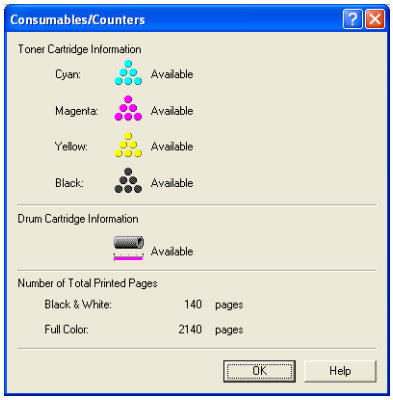

The meanings of the icons are as follows.

Icon	Meaning
	Continue using as normal.
	The drum cartridge is nearing the end of its life. Buy a replacement drum cartridge.
	The drum cartridge has reached the end of its life. Replace the drum cartridge.
	The drum cartridge has not been installed.

Replacing the Drum Cartridge

Replace the drum cartridge with a new one when the message "Drum Cartridge Replacement Required" appears in the Printer Status Window.

WARNING

Do not put spent drum cartridges into a fire. Any toner remaining in the drum cartridge may ignite, causing burns or fire.

CAUTION

- **Be careful to avoid staining your clothes or hands with toner. If you do get any toner on your clothes or hands, wash it off immediately with cold water. If you rinse using hot water the toner may become fixed, creating a stain that cannot be removed.**
- **Never touch the electrical contact or gears inside the top cover. Doing so may cause an electrical shock or personal injury.**

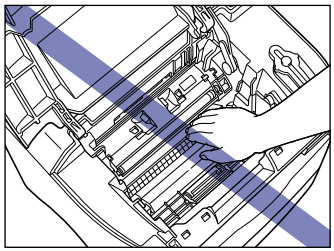

IMPORTANT

- Only use a drum cartridge that was designed for use with this printer.
- The inner portion of the printer needs to be cleaned when replacing the drum cartridge, therefore, have a soft, dry cloth available.

1 Open the top cover.

Hold the grip on the top cover and open it until it stops.

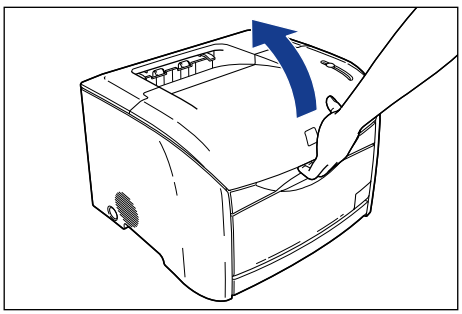

2 Remove the drum cartridge from the printer.

Push the drum cartridge in the direction of the arrow ①, then lift it straight up ② to remove it.

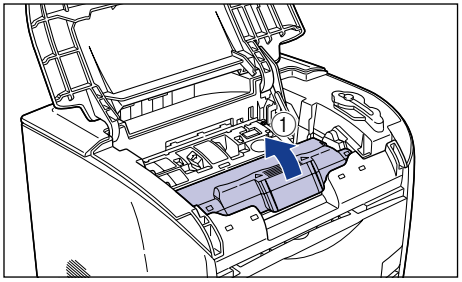

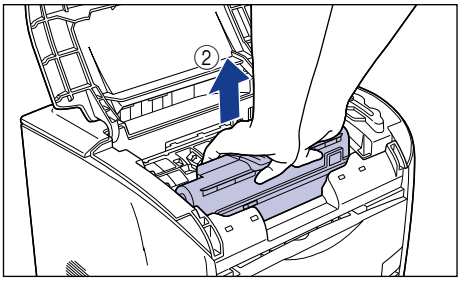

3 Use a soft, dry cloth to wipe off shreds of paper and toner that have become attached to the transparent sheet located in front of the roller.

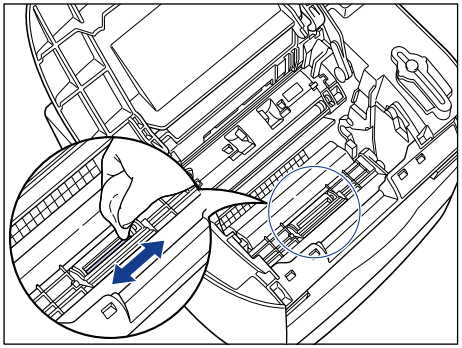

WARNING

Always use a dry cloth for cleaning. Do not use alcohol, benzene, thinners or any other inflammable substance. If an inflammable substance comes into contact with the electrical unit inside the printer it may ignite or cause an electrical shock.

IMPORTANT

- Be careful not to scratch the transparent sheet or peel it by force.
- Do not wet the cloth with water or detergent.
- Be careful not to touch unnecessary parts in the printer when cleaning.

4 Take the drum cartridge out of the protective bag.

Open the protective bag with scissors, so as not to damage the cartridge.

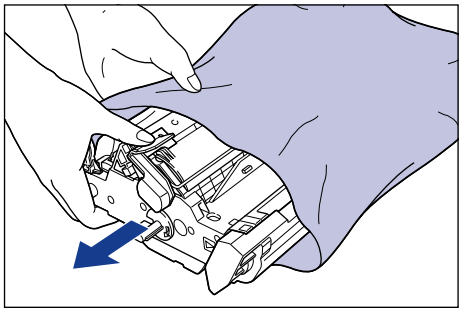

IMPORTANT

- Do not throw away the drum cartridge protective bag. You will need this bag when you remove the drum cartridge for printer maintenance, etc.
- If you touch the inner drum with your hand or scratch it, the printing quality will be degraded. Do not touch or open the drum protective shutter under any circumstances. Be careful not to hold or touch sensitive areas such as the sensor or electrical contacts. Doing so may damage the drum cartridge.

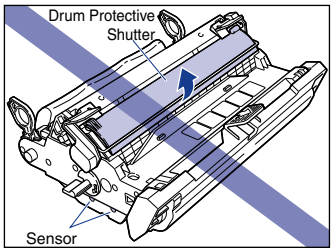

- Do not expose the drum cartridge to direct sunlight or strong light.

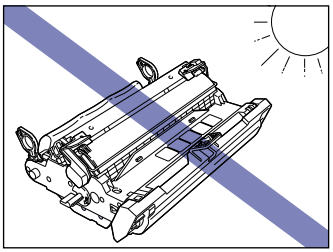

5 Remove the packing materials (7 pieces).

Remove the packing materials ① and ② by hooking your fingers into the tabs and pulling them in the direction of the arrows.

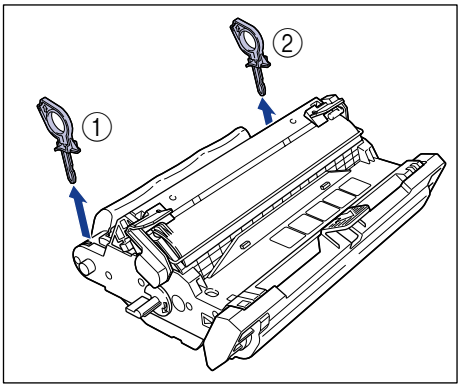

Remove the packing materials ③ and ④ by turning them in the direction of the arrows until they stop and pulling them out.

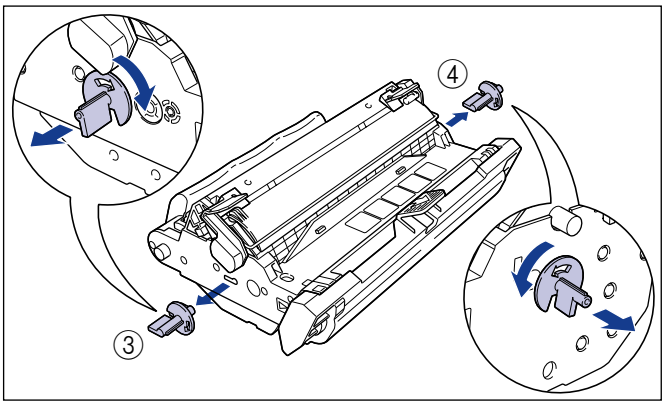

Remove the packing materials ⑤ and ⑥ by holding the grips and pulling them in the direction of the arrows.

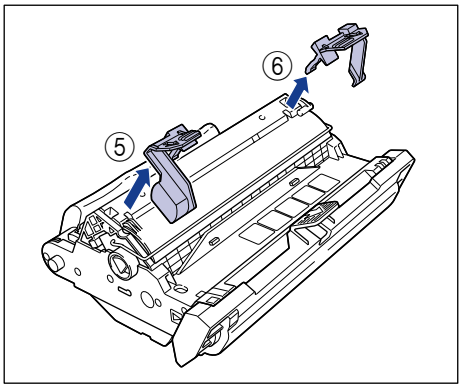

Hold the packing material ⑦ and remove it as shown in the figure.

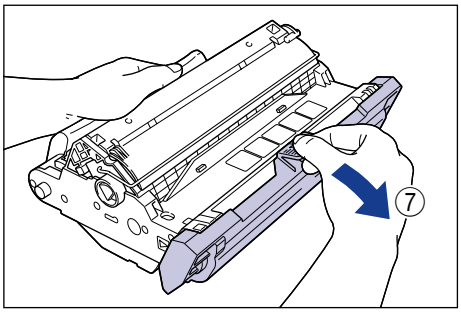

IMPORTANT

- Do not hold or touch the electrical contacts. Doing so may damage the drum cartridge.

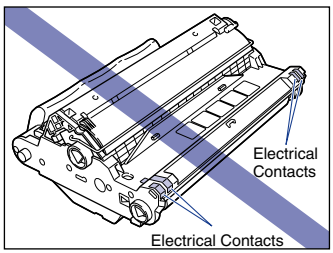

- Do not hold or touch the transfer belt. Doing so will degrade the printing quality. Do not jolt the drum cartridge memory or bring it near a magnetic field. Doing so may damage the drum cartridge.

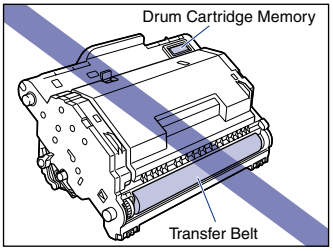

- After removing the packing materials, install the drum cartridge in the printer as soon as possible.
- Dispose of the packing materials according to local regulations.

6 Hold the drum cartridge with both hands and insert it in the printer.

Align the triangular mark on the drum cartridge with the triangular mark on the printer when you insert the drum cartridge ①.

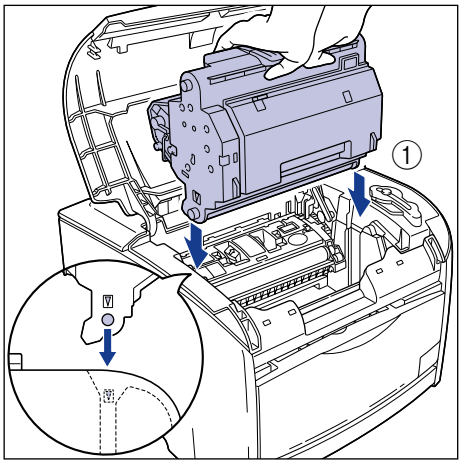

Lock the drum cartridge by pulling it down toward you ②.

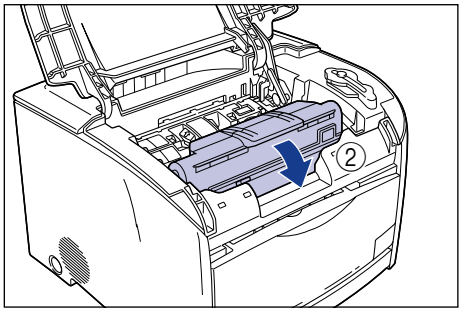

IMPORTANT

Firmly lock the drum cartridge until it is in the state shown in the figure.

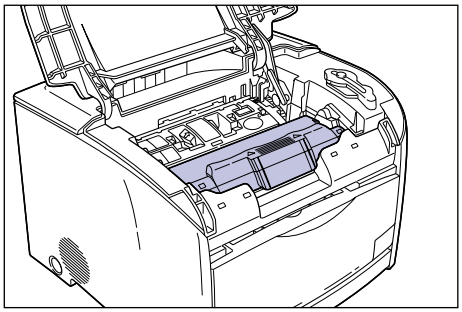

7 Close the top cover.

Hold the grip on the top cover and close it gently.

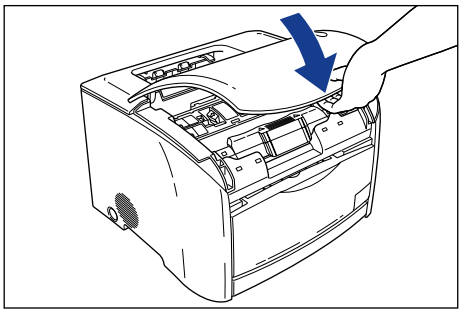

Precautions for Handling the Drum Cartridge

The drum cartridge is composed of light-sensitive components and intricate mechanical components. Handling the cartridge roughly can damage it or cause deterioration of printing quality. Whenever you are installing or removing the drum cartridge, take care of the following handling precautions.

WARNING

Do not put spent drum cartridges into a fire. Any toner remaining in the drum cartridge may ignite, causing burns or fire.

CAUTION

Be careful to avoid staining your clothes or hands with toner. If you do get any toner on your clothes or hands, wash it off immediately with cold water. If you rinse using hot water the toner may become fixed, creating a stain that cannot be removed.

IMPORTANT

- If you touch the inner drum with your hand or scratch it, the printing quality will be degraded. Do not touch or open the drum protective shutter under any circumstances. Be careful not to hold or touch sensitive areas such as the sensor or electrical contacts. Doing so may damage the drum cartridge.

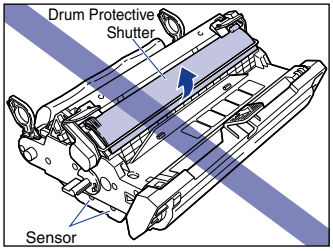

- Do not expose the drum cartridge to direct sunlight or strong light.

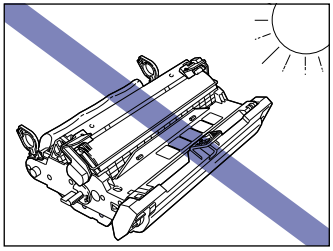

- If a drum cartridge has to be removed from the printer for maintenance, immediately place it in the protective bag that it came in.

- Do not hold or touch the electrical contacts. Doing so may damage the drum cartridge.

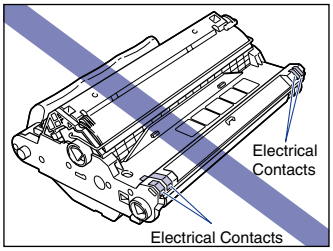

- Do not hold or touch the transfer belt. Doing so will degrade the printing quality. Do not jolt the drum cartridge memory or bring it near a magnetic field. Doing so may damage the drum cartridge.

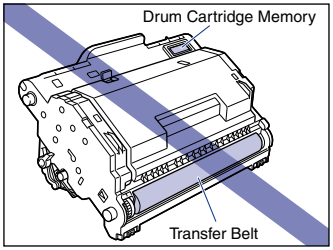

- When handling the drum cartridge, hold it properly as shown in the figure. Do not stand it on its end, or turn it upside down.

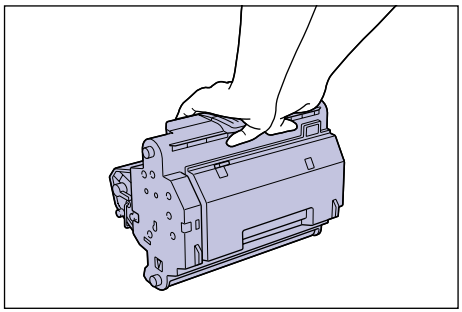

- Do not attempt to disassemble or modify the drum cartridge.
- If you expose the drum cartridge to rapid changes in temperature, droplets of water (condensation) may form on the interior and exterior of the cartridge. If a new drum cartridge that has been stored in a cool location is going to be installed in a warm area, leave the cartridge for two or more hours without opening the protective bag to allow the cartridge to adjust to the surrounding temperature before opening the bag.
- Be sure to use a new cartridge within the expiration date indicated on the package.

Storing Drum Cartridges

Take care of the following points when storing a new drum cartridge or handling a drum cartridge that has been taken out of the printer for maintenance or to move the printer.

IMPORTANT

- Do not remove a new drum cartridge from the protective bag until it is ready to be used.
- If a drum cartridge has to be removed from the printer for maintenance, place it in the protective bag that it came in or wrap it with a thick cloth immediately.
- Do not store the drum cartridge in a place exposed to direct sunlight.
- Do not store cartridges in a hot or humid place, or a place where the temperature and humidity can change rapidly.
  Storing temperature range: 0 to 35°C (32 to 95°F)
  Storing humidity range: 35 to 85% RH (no condensation)
- Do not store the drum cartridge in a place where corrosive gases, such as ammonia, are generated, or where a considerable amount of salt is contained in the air, or where there is a lot of dust.
- Keep the drum cartridge out of reach of small children.

■ Condensation

Even when the humidity is within the storage range, water droplets may form on the inside or outside of the drum cartridge due to temperature differences with the surrounding air. This condensation will have a bad effect on the performance of the drum cartridge.

Calibrating the Printer

If the printed colors change compared to earlier printing, calibrate the printer using the following procedure.

1 Open the [Printers and Faxes] folder or [Printers] folder.

For Windows 98/Me/2000: Select [Settings] → [Printers] from the [Start] menu.
For Windows XP Professional/Server 2003: Select [Printers and Faxes] from the [Start] menu.
For Windows XP Home Edition: Select [Control Panel] from the [Start] menu, then click [Printers and Other Hardware] → [Printers and Faxes].

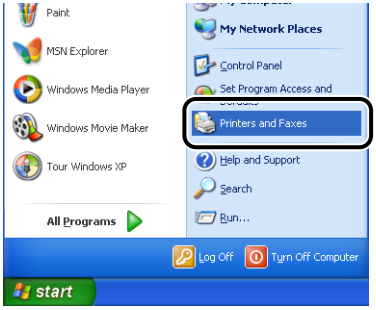

The [Printers] folder or the [Printers and Faxes] folder is displayed.

2 Select the [Canon LBP5200] icon, then select [Printing Preferences] (For Windows 2000/XP/Server 2003) or [Properties] (For Windows 98/Me) from the [File] menu.

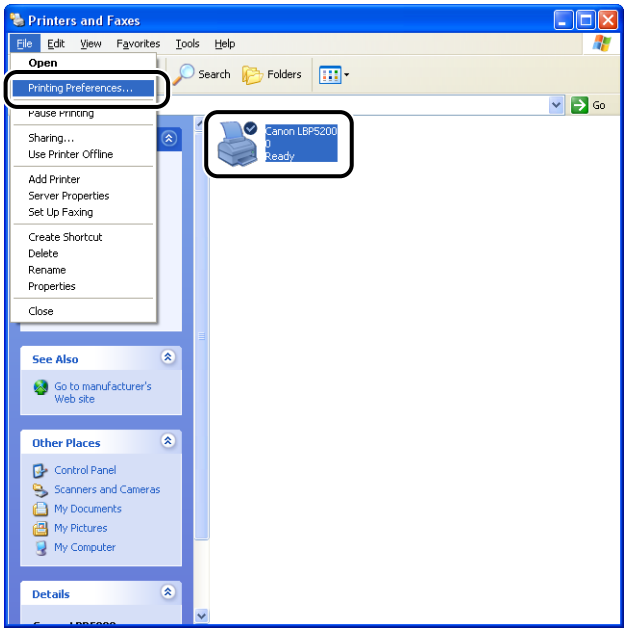

The [Properties] dialog box for the printer is displayed.

3 Display the [Page Setup] sheet, then click [ ] (Display Printer Status Window).

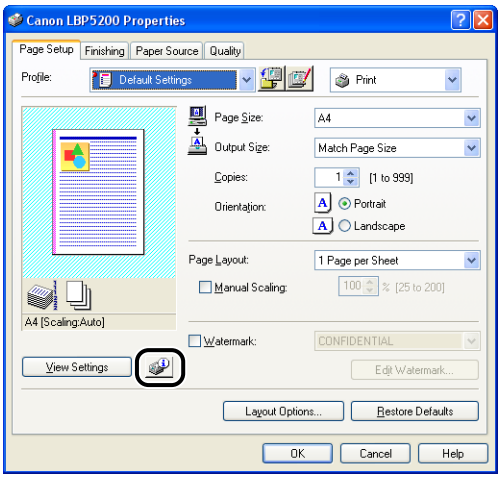

The Printer Status Window appears.

4 Select [Utility] → [Calibration] from the [Options] menu.

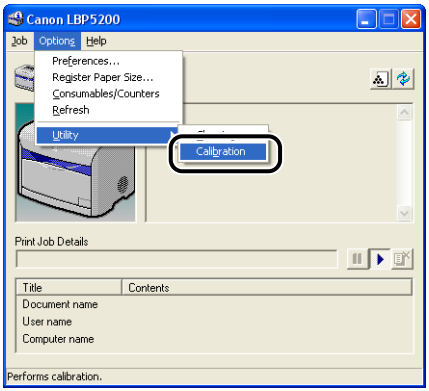

The printer begins calibrating.
This takes approximately 65 seconds.Please wait a moment.

Cleaning the Fixing Roller

If black dot-shaped smudges appear on the front or back surfaces of printed paper, use the following procedure to clean the fixing roller. Cleaning the roller prevents printing problems from occurring. Clean the fixing roller first involves printing the cleaning page shown in the figure on a piece of A4 paper. This cleaning page is fed in through the multi-purpose tray, and cleans the fixing roller.

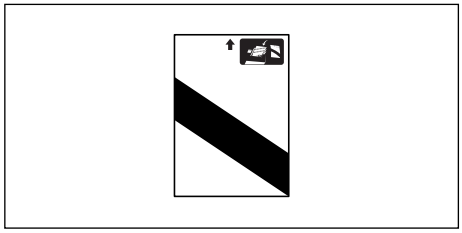

IMPORTANT

The cleaning page cannot be printed on any paper other than A4. Prepare a piece of A4 size paper.

1 Open the multi-purpose tray.

Grasp the handhold in the center of the printer, and open the multi-purpose tray.

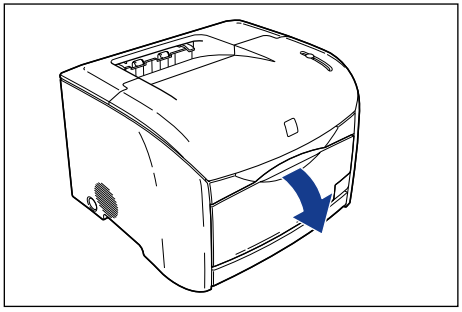

2 Pull out the auxiliary tray ① and open the extension tray ②.

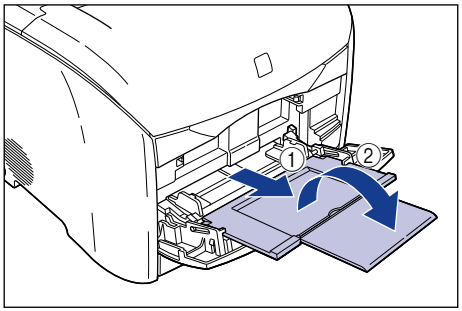

3 Load one sheet of A4 paper into the multi-purpose tray.

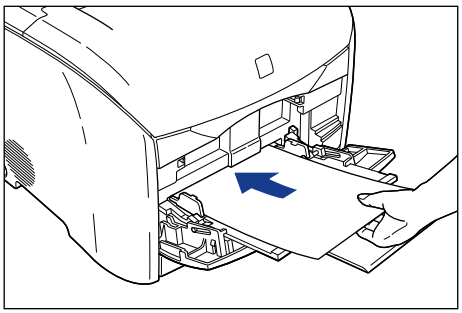

4 Open the Printer Status Window.

For details on opening the Printer Status Window, refer to "Displaying the Printer Status Window," on p. 4-74.

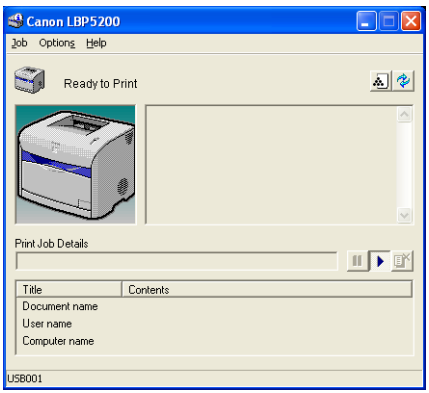

5 Select [Utility] → [Cleaning] from the [Options] menu.

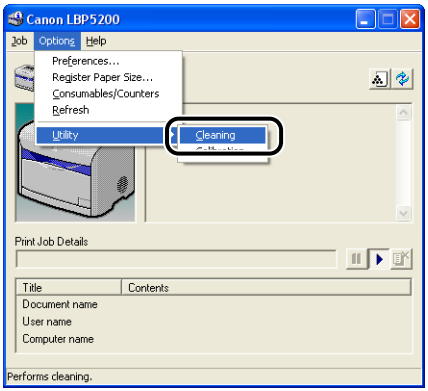

The cleaning page is printed.

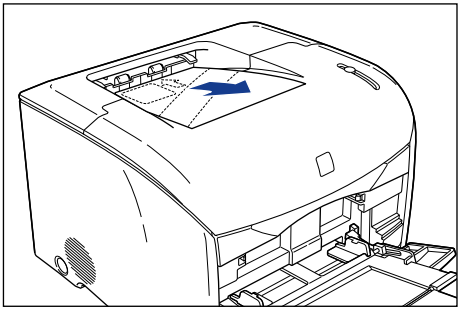

6 Load the cleaning page into the multi-purpose tray with the printed side facing down and the arrow pointing into the printer.

If other paper is already loaded in the multi-purpose tray, load the cleaning page before you click [▶] (resume).

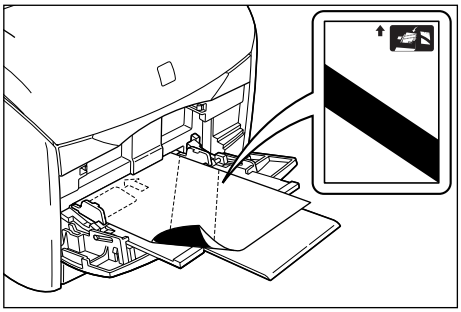

The paper feeds slowly into the printer and the printer starts cleaning the fixing roller.

NOTE

- Cleaning takes approximately 3 minutes.
- Cleaning cannot be interrupted.Wait until the cleaning is finished.

Cleaning the Printer

To maintain the optimal printing quality from your printing, periodically clean the outer parts of the printer and the air inlet and exhaust ducts. To avoid damage to the printer and electrical shocks while cleaning, observe the following precautions when cleaning.

WARNING

- **Turn the printer off and remove the plug from the wall when you are cleaning the printer. Failure to do so may cause fire or electrical shock.**
- **Do not use alcohol, benzene, thinners or any other inflammable substance. If an inflammable substance comes into contact with the electrical unit inside the printer it may ignite or cause an electrical shock.**

IMPORTANT

- Be careful not to use a cleaning agent other than water or a mild detergent mixed with water as it may deform or crack the plastic materials in the printer.
- When using a mild detergent, be sure to dilute it with water.
- This printer does not need to be lubricated. Do not lubricate the printer.

1 **Press the power switch to turn the printer off ①, remove the USB cable ②, and disconnect the power plug from the power outlet ③.**

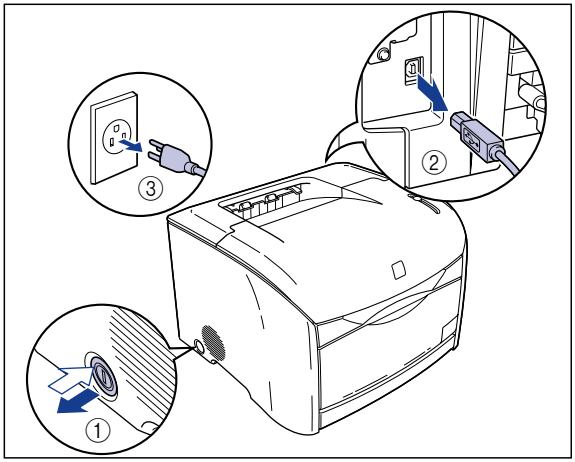

2 Firmly wring a soft cloth dampened with water or a mild detergent diluted with water, and wipe off the dirt.

If you use a mild detergent for cleaning, be sure to wipe away the detergent with a soft cloth dampened with water.

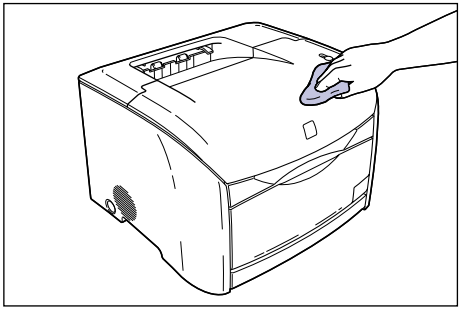

3 After wiping off the dirt, wipe the printer with a dry cloth.

4 Once the printer is completely dry, plug the power plug into the power outlet and reconnect the USB cable.

Moving the Printer

When changing the location of the printer or moving the printer for maintenance, be sure to perform the following procedure.

WARNING

When you are moving the printer, always turn the printer off, unplug the power plug, and remove the interface cable. If you move the printer without unplugging the cables, the electrical cord and interface cable may be damaged, causing a fire or electrical shock.

CAUTION

- **This printer weighs approximately 22.7 kg (Main Unit: Approx. 17 kg; 4 x Toner Cartridge: Approx. 3.2 kg; Drum Cartridge: Approx. 2.5 kg). Take care to carry the printer without hurting your back.**
- **Never hold the printer by the front panel, ventilation slots, rear panel, or anywhere else other than the grips for moving the printer. Doing so may cause the printer to fall, resulting in personal injury.**

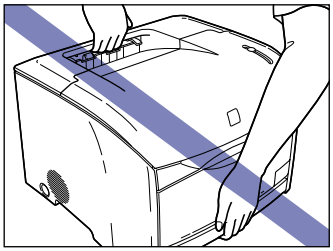

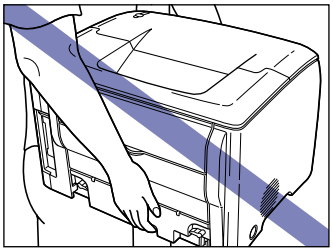

- **The rear side of the printer is the heavy side. When lifting the printer, take care not to lose your balance. Doing so may cause the printer to fall, resulting in personal injury.**

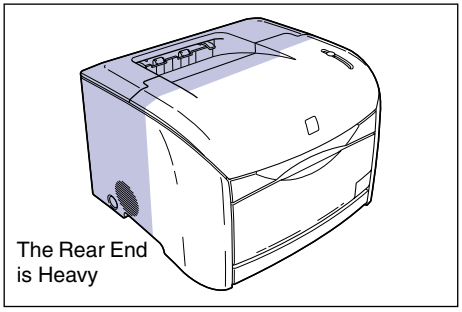

Moving the Printer

Use the following procedure to move the printer. If the 250-sheet paper feeder is fitted on the printer, refer to "When the 250-sheet paper feeder is installed" in the next section.

1 **Press the power switch to turn the printer off ①, remove the USB cable ②, and disconnect the power plug from the power outlet ③.**

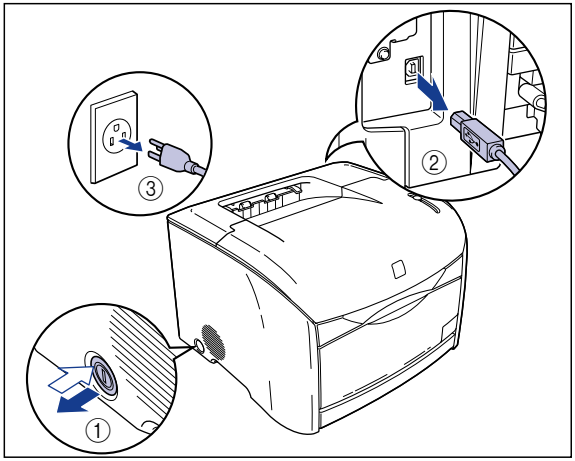

2 **Remove all the interface cables and the power cord from the printer.**

3 **Carry the printer unit.**

Hold the grips located on either side of the printer securely with both hands.

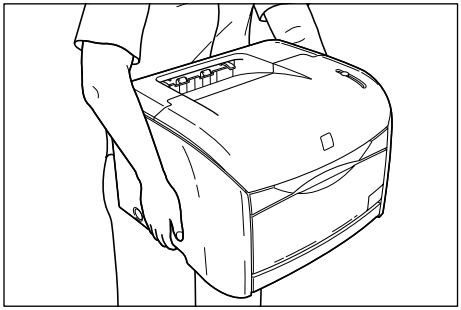

4 Put the printer down carefully at the installation site.

CAUTION

Put the printer down slowly and carefully. You may be injured if your hands, etc. are pinched by the printer.

IMPORTANT

Be sure that there is enough space set aside at the installation site for installing the optional accessories and connecting cables.

5 Connect the interface cables except for the USB cable, and connect the power cord.

6 Plug the power plug into the AC power outlet.

7 Connect the USB cable.

● Transporting the Printer

When transporting the printer for reasons such as relocating, remove the toner cartridges and store the printer and the parts in the package that they came in with the protective materials attached in order to prevent them from being damaged while being transported.
If the original package and packing materials are not available, find an appropriate box and packing materials and pack the printer and the parts appropriately.

When the 250-sheet paper feeder is installed

If the optional 250-sheet paper feeder is installed, remove the paper feeder using the following procedure before moving the printer.

CAUTION

- **Do not move the printer with the optional 250-sheet paper feeder still attached.**

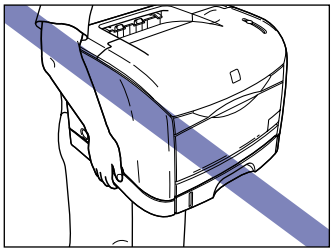

- **Never hold the printer by the paper cassette, rear panel, or anywhere else other than the grips for moving the printer. Doing so may cause the printer to fall, resulting in personal injury.**

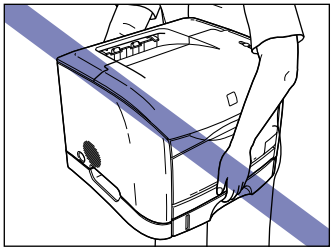

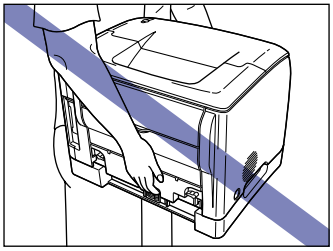

1 Press the power switch to turn the printer off ①, remove the USB cable ②, and disconnect the power plug from the power outlet ③.

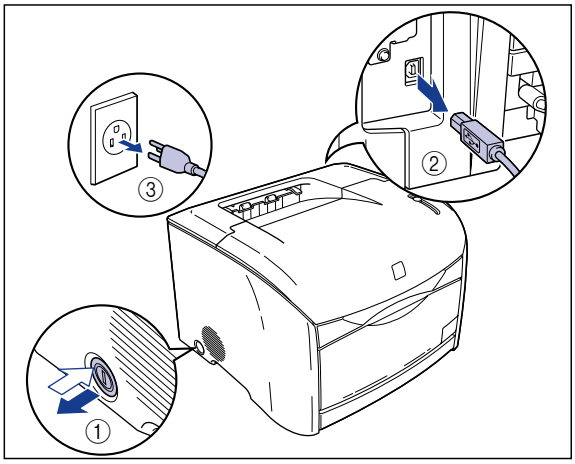

2 Remove all the interface cables and the power cord from the printer.

3 Detach the printer from the paper feeder.

Hold the grips located on either side of the printer securely with both hands.

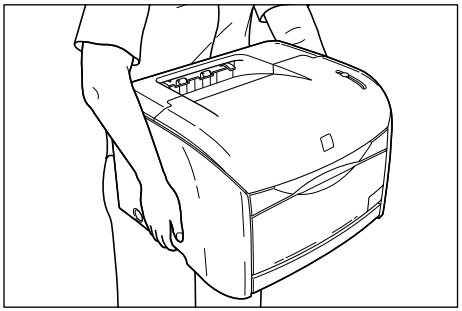

4 Carry the paper feeder to the installation site.

When carrying the paper feeder, hold the grips on both sides as shown in the figure.

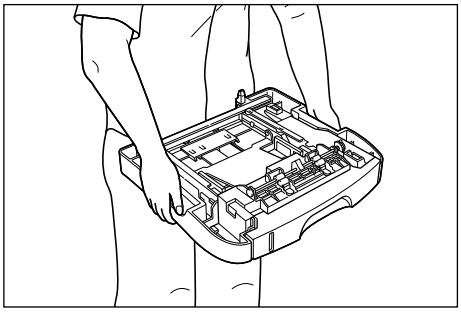

IMPORTANT

Make sure there is enough space set aside at the installation site for attaching cables, etc.

5 Put the printer down slowly on the paper feeder.

Place the printer so that the transport grips align with the pockets on the paper feeder.

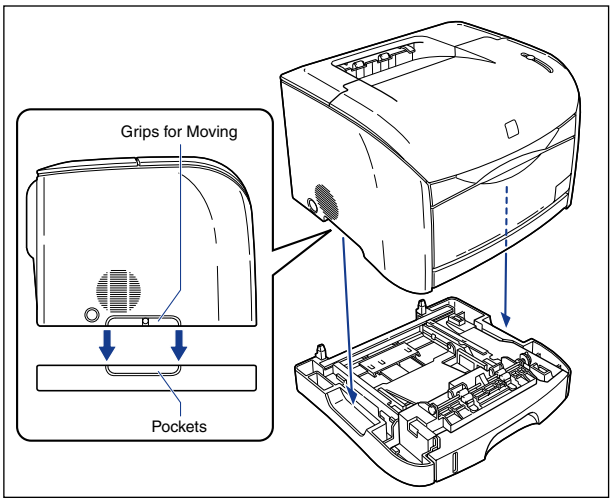

CAUTION

Put the printer down slowly and carefully on the paper feeder. You may be injured if your hands, etc. are pinched by the printer.

6 Connect the interface cables except for the USB cable, and connect the power cord.

7 Plug the power plug into the AC power outlet.

8 Connect the USB cable.

> **● Transporting the Printer**
>
> When transporting the printer for reasons such as relocating, remove the toner cartridges and store the printer and the parts in the package that they came in with the protective materials attached in order to prevent them from being damaged while being transported.
> If the original package and packing materials are not available, find an appropriate box and packing materials and pack the printer and the parts appropriately.

Handling the Printer

This printer uses a variety of electronic components and delicate optical components. Read the following section carefully, and take care when handling the printer.

IMPORTANT

The methods for handling the printer are also described in "Important Safety Instructions," on p. xv.

Precautions for Handling the Printer

To ensure that you can always achieve high quality printing, observe the following precautions.

IMPORTANT

- Do not place any heavy objects on top of the printer or the multi-purpose tray. Doing so may damage the printer.

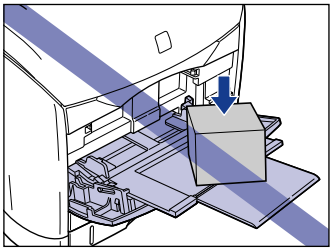

- Do not lave the top cover open for any longer than you need to. Exposure to direct sunlight or strong light can degrade the printer performance.
- Do not shake the printer while it is printing. Doing so may reduce the printing quality.

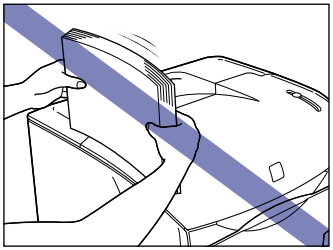

- Do not open the top cover of the printing while it is printing. Doing so may damage the printer.

- Open and close the multi-purpose tray, sub-output tray and the top cover of the printer gently. The printer may be damaged if you are rough.
- If you want to spread a blanket over the printer to prevent dust from entering the printer, turn the power off and allow the printer to cool down sufficiently before covering the printer.
- If you do not plan to use the printer for a long period of time, unplug the power cord from the AC power outlet.
- Do not use or store the printer in a room where chemicals are used.

Precautions for Storing the Printer

If you do not plan to use the printer for a long period of time, store it in the following environment:

- Temperature: from 0 to 35°C (32 to 95°F)
- Humidity: from 35 to 85% RH with no condensation

Optional Accessories

6
CHAPTER

This chapter describes the optional accessories and the procedures for installing them on the printer.

Optional Accessories 6-2
Network Board (AXIS 1611) 6-3
Installing the Network Board (AXIS 1611) 6-12
Verifying the Contents of the Package 6-13
Parts and Their Functions 6-13
Installing the Network Board 6-14
Removing the Network Board 6-19

Optional Accessories

The following optional accessories are available to allow you to full utilize the features of this printer. Purchase these products as you need them. Contact the store where you purchased the printer for inquiries about the optional accessories.

250-sheet Paper Feeder

The 250-sheet paper feeder attaches to the base of the printer. Up to approximately 250 sheets of plain paper (64 g/m^2) in sizes of A4, B5, A5, Legal, Letter, and Executive can be loaded in the paper cassette in the optional 250-sheet paper feeder (Cassette 1).

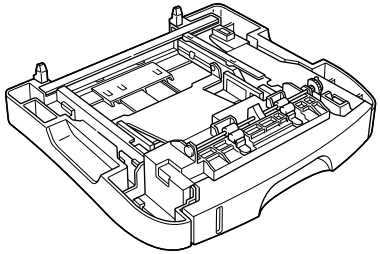

Paper Feeder Unit PF-96

Network Board (AXIS 1611)

Installing the optional network board (AXIS 1611) allows you to use the LBP5200 directly over a network.

For more details on the AXIS 1611, visit the Axis Communications website (http://www.axis.com/).

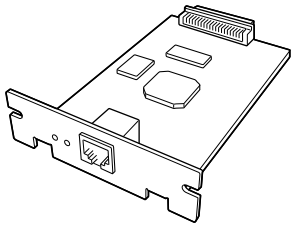

Network Board (AXIS 1611)

Installing the 250-sheet Paper Feeder

Installation Space

The following figures show the dimensions of each part of the printer, the dimensions of the space required around the printer, and the positions of the feet when the printer is fitted with the 250-sheet paper feeder.

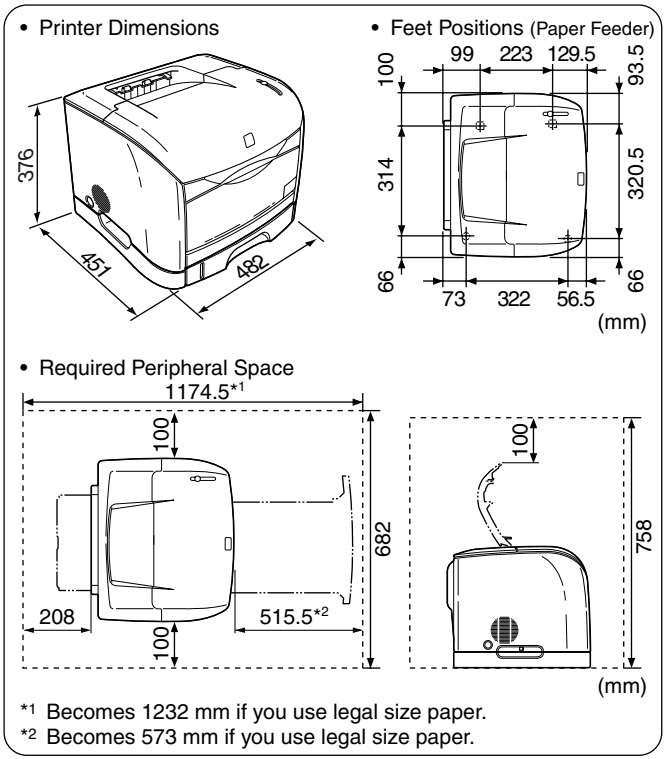

Verifying the Contents of the Package

Before installing the 250-sheet paper feeder, make sure that all of the following items were present in the package. In the rare event that any components are missing or damaged, contact the store where you purchased the feeder.

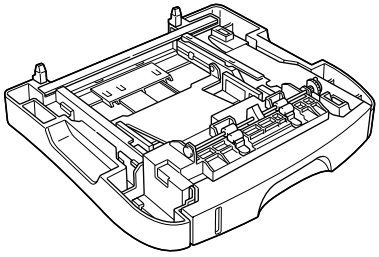

Paper Feeder Unit PF-96

Installing the 250-sheet Paper Feeder

Attach the 250-sheet paper feeder to the base of the printer using the following procedure.

WARNING

Make sure you turn the printer off, disconnect the power plug and remove all interface cables and the power cord from the printer before attaching the 250-sheet paper feeder. If you move the printer without unplugging the cables, the electrical cord and interface cables may be damaged, causing a fire or electrical shock.

IMPORTANT

- Do not touch the connectors or rollers in the paper feeder. Doing so may damage the feeder or cause paper feeding problems.

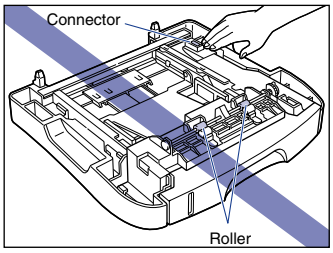

- Cellophane tape and packing materials are attached to protect the 250-sheet paper feeder from vibrations and shocks during transport. Make sure you remove all packing material before use.
- Store the packing materials carefully, as you will need them when you transport or repair the 250-sheet paper feeder.

1 Press the power switch to turn the printer off ①, remove the USB cable ②, and disconnect the power plug from the power outlet ③.

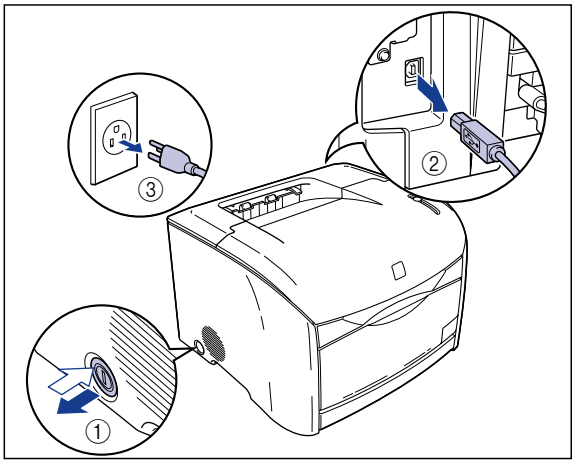

2 Remove all the interface cables and the power cord from the printer.

3 Move the printer from the installation site.

Hold the grips located on both sides of the printer securely with both hands.

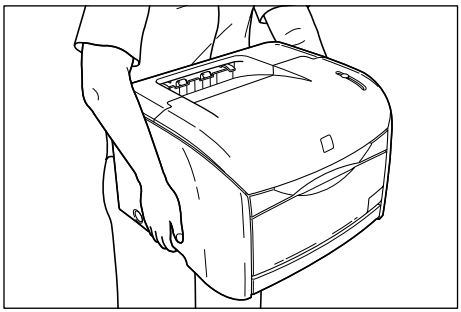

CAUTION

- **This printer weighs approximately 22.7 kg (Main Unit: Approx. 17 kg; 4 x Toner Cartridge: Approx. 3.2 kg; Drum Cartridge: Approx. 2.5 kg). Take care to carry the printer without hurting your back.**

- **Never hold the printer by the front panel, ventilation slots, rear panel, or anywhere else other than the grips for moving the printer. Doing so may cause the printer to fall, resulting in personal injury.**

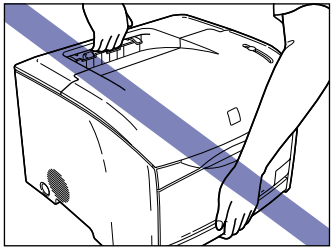

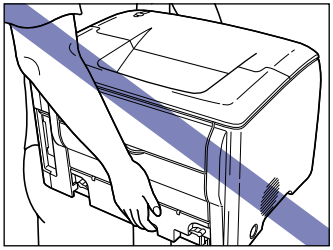

- **The rear side of the printer is the heavy side. When lifting the printer, take care not to lose your balance. Doing so may cause the printer to fall, resulting in personal injury.**

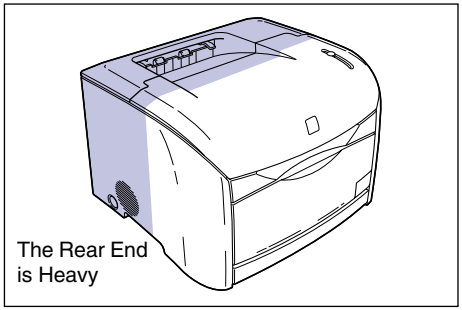

4 Carry the paper feeder to the installation site.

When carrying the paper feeder, hold the grips on both sides as shown in the figure.

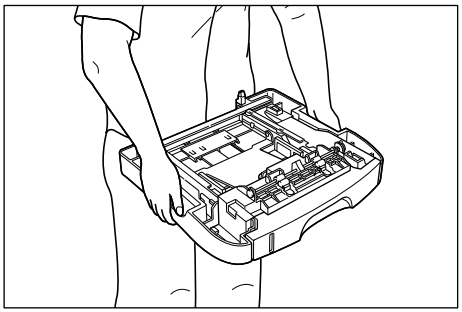

5 Pull out the paper cassette from the paper feeder.

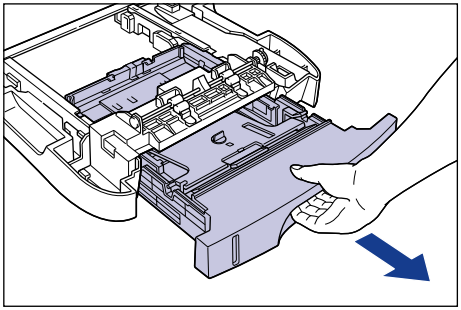

6 Remove the tape that is securing the rear paper guide.

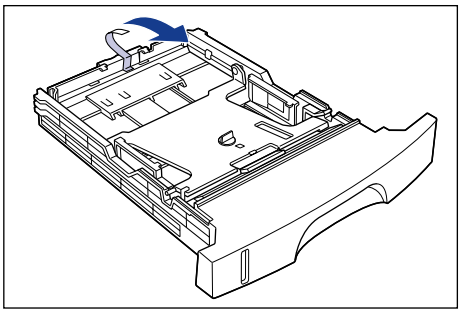

7 Push down the paper cassette plate ① and remove the packing material by rotating it to the left ②.

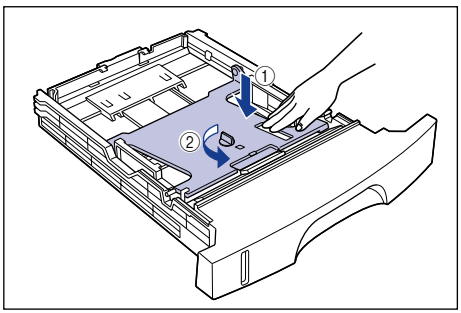

8 Insert the paper cassette into the paper feeder.

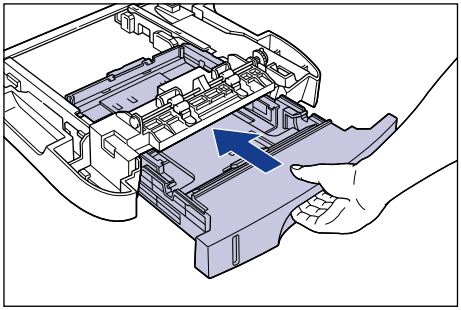

9 Put the printer down slowly on the paper feeder.

Align the printer so that the grips on the printer match the pockets on the paper feeder.

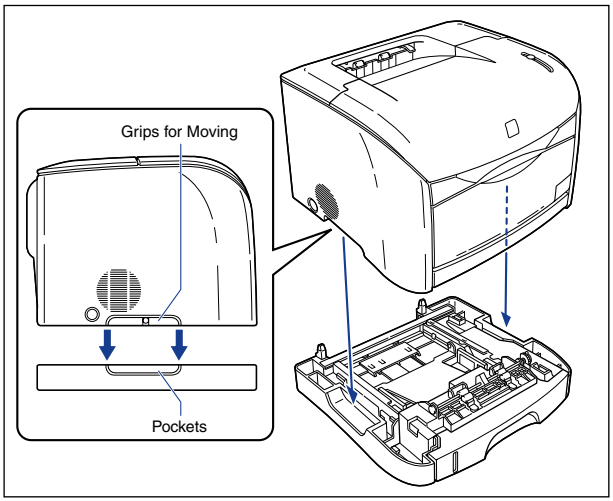

CAUTION

Put the printer down slowly and carefully on the paper feeder. You may be injured if your hands, etc. are pinched by the printer.

10 Connect the interface cables except for the USB cable, and connect the power cord.

11 Plug the power plug into the AC power outlet.

12 Connect the USB cable.

IMPORTANT

- Refer to "Printing from the Paper Cassette," on p. 2-34 for information on loading paper.
- When loading paper for the first time after installing the paper feeder, be sure to turn the printer on at least once before loading the paper.

Removing the 250-sheet Paper Feeder

Remove the paper feeder using the following procedure.

WARNING

Make sure you turn the printer off, disconnect the power plug and remove all interface cables and the power cord from the printer before removing the 250-sheet paper feeder. If you remove the paper feeder without unplugging the cables, the electrical cord and interface cables may be damaged, causing a fire or electrical shock.

IMPORTANT

Remove the paper feeder when you are going to move or repair the printer.

---

1 Press the power switch to turn the printer off, remove the USB cable, and disconnect the power plug from the power outlet.

2 Remove all the interface cables and the power cord from the printer.

3 Lift the printer and remove it from the paper feeder.

4 Move the paper feeder.

5 Move the main unit back to the installation site.

6 Connect the interface cables except for the USB cable, and connect the power cord.

7 **Plug the power plug into the AC power outlet.**

8 **Connect the USB cable.**

Installing the Network Board (AXIS 1611)

Installing the optional network board (AXIS 1611) allows you to use the LBP5200 directly over a network.

For more details on the AXIS 1611, visit the Axis Communications website (http://www.axis.com/).

■ If the computers connect directly to the network board

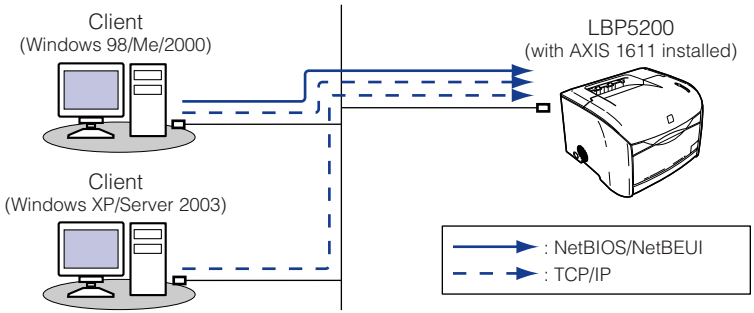

■ If the computers connect via a print server

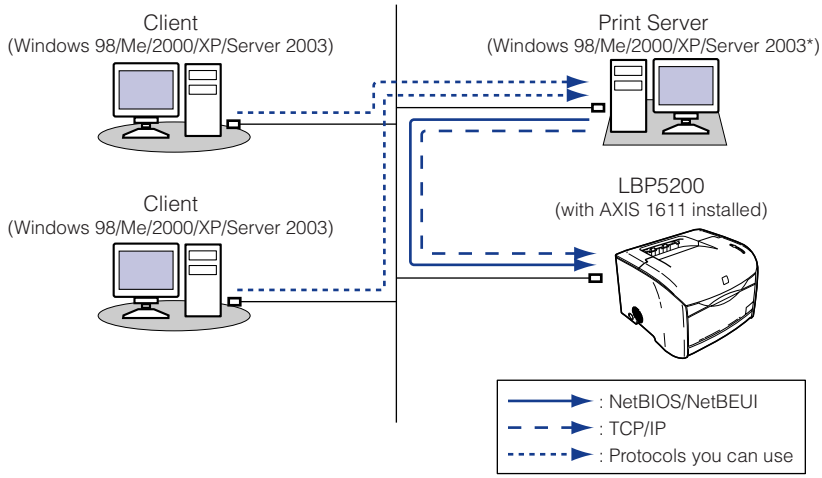

* If the print server is running Windows XP/Server 2003, you cannot use the NetBIOS/NetBEUI protocol between the print server and printer.

Verifying the Contents of the Package

Before installing the network board, make sure that all of the following items are present in the package. In the rare event that any components are missing or damaged, contact the store where you purchased the board.

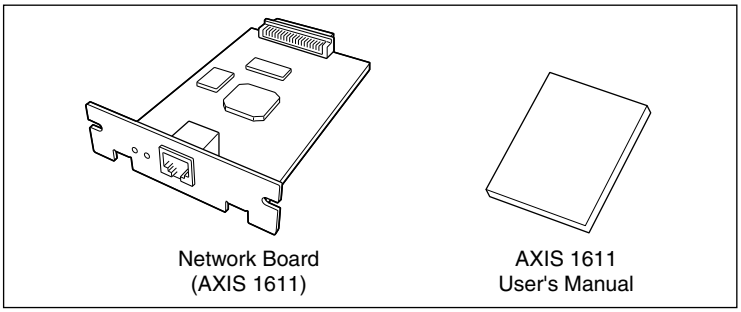

NOTE

A LAN cable is not supplied with the network board. If you are installing the network board to connect the printer to a network, you will need a category 5 twisted pair cable. Cables, hubs, etc. should be obtained separately as required.

Parts and Their Functions

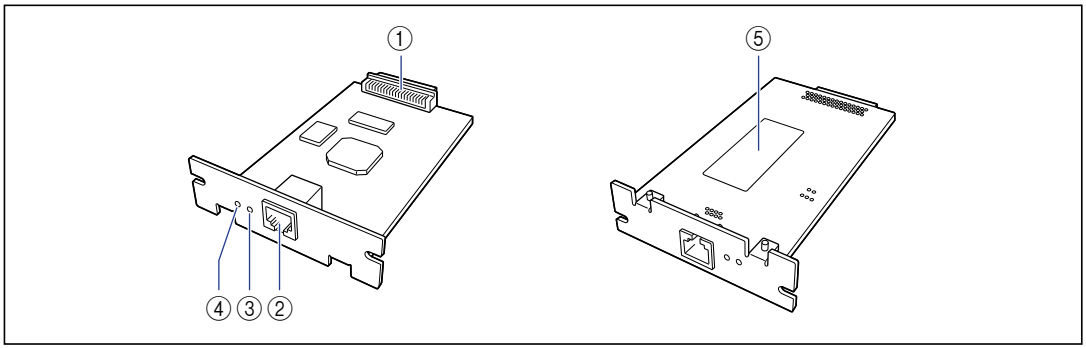

① Printer Connector

This is the connector that plugs into the printer. Do not touch the connector with your fingers.

② LAN Connector

Connects to a 10BASE-T/100BASE-TX LAN cable.

③ Status Lamp

Shows the status of the network board. If the lamp flashes when the LAN cable is not connected, the network board is malfunctioning.

④ Power Lamp

This light turns on when the printer is on. If this lamp does not come on when the printer is turned on, the network board is malfunctioning.

⑤ MAC Address Label

Displays the MAC address of this network board.

Installing the Network Board

Use the following procedure to install the network board in the expansion board slot at the rear of the printer.

CAUTION

- **Make sure that the printer is turned off and that all interface cables and power cord are disconnected from the printer before installing the network board. Attempting to install the board with the power on may result in electrical shock.**
- **Take care when you are handling the network board. Do not touch the corners or sharp areas of the network board as may cause personal injury.**

IMPORTANT

The network board contains components that are sensitive to static electricity. To avoid damaging the board due to static electricity, observe the following handling precautions.

- Touch a metal object to dissipate static electricity before handling the network board.
- When handling the network board, do not touch anything that generates static electricity such as the computer display.
- Do not touch any of the components, printed wiring, or connectors on the network board.
- To avoid the effects of static electricity, do not remove the network board from the protective bag until immediately before you install it. The protective bag is also needed when you remove the network board. Store the protective bag and do not discard of it.

NOTE

You will need a Philips-head screwdriver to install the network board. Prepare a screwdriver in advance that matches the size of the screws.

1 Press the power switch to turn the printer off ①, remove the USB cable ②, and disconnect the power plug from the power outlet ③.

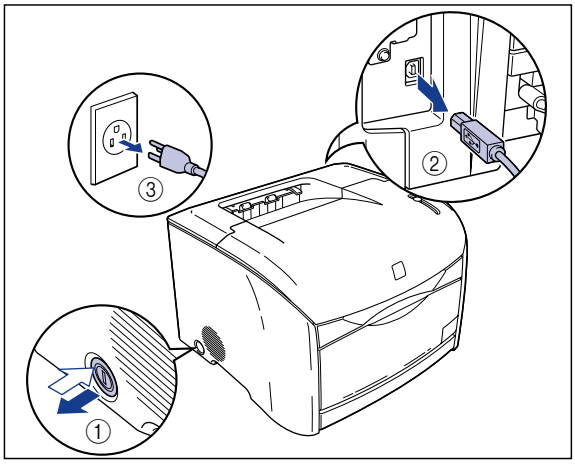

2 Remove all the interface cables and the power cord from the printer.

If there is not enough space to install the network board, move the printer to a place where it is easier to work.

3 Remove the 2 screws from the top and bottom sections of the expansion board slot, and then remove the protective plate.

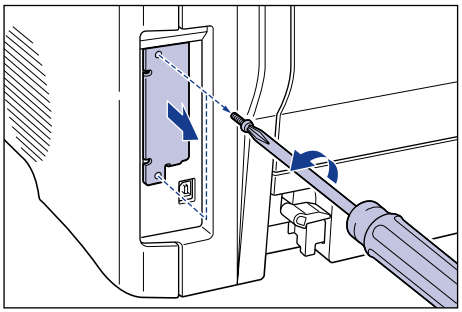

IMPORTANT

You will need the screws that you removed to attach the network board. You will also need the protective plate if you remove the network board. Store these parts and do not discard them.

4 Insert the network board into the expansion slot.

Hold the metal panel portions of the network board and insert the board so that it is aligned with the guide rails inside the expansion slot.

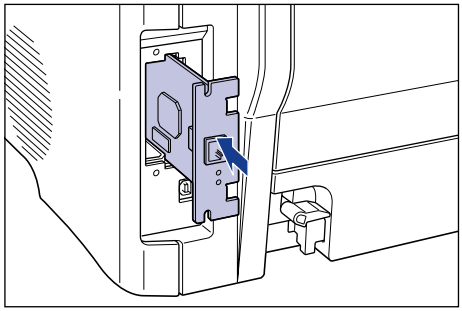

IMPORTANT

- Do not touch any of the components, printed wiring, or connectors on the network board.
- Push the network board firmly until the printer connector on the network board is securely plugged into the connector inside the expansion slot.

5 Attach the top and bottom parts of the network board using the 2 screws that you removed in Step 3.

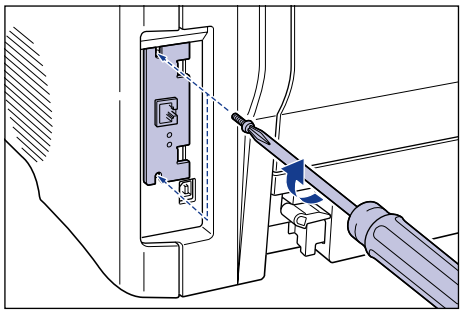

6 Connect the LAN cable.

Make sure to use a LAN cable that is compatible with the LAN socket on the network board as appropriate for the network you are using.

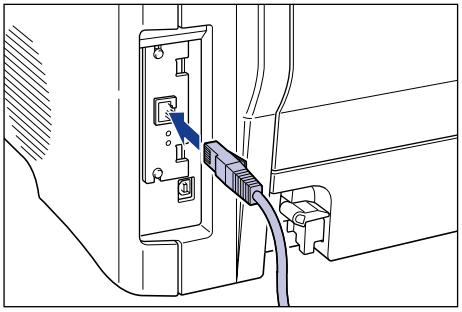

NOTE

A LAN cable is not supplied with the network board. If you are installing the network board to connect the printer to a network, you will need a category 5 twisted pair cable. Cables, hubs, etc. should be obtained separately as required.

7 Connect the other end of the LAN cable to a hub.

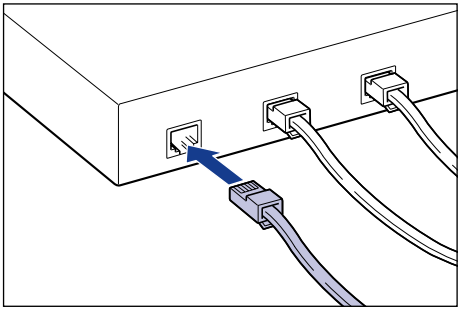

8 Connect the interface cables except for the USB cable, and connect the power cord.

9 Plug the power plug into the AC power outlet.

10 If necessary, connect the USB cable.

11 Press the power switch to turn the printer on.

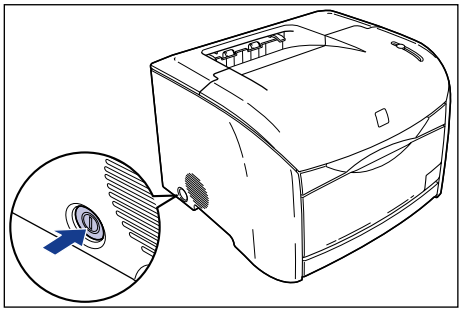

IMPORTANT

Refer to the users manual supplied with the AXIS 1611 if the board does not operate properly, or an error message appears in the Printer Status Window.

12 Check that the Power lamp on the network board is on.

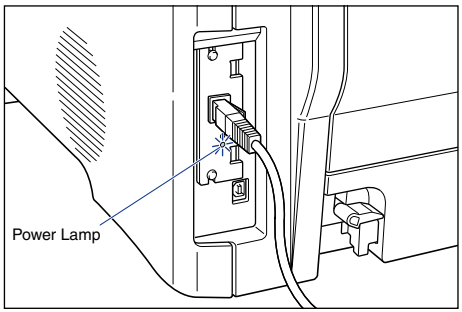

If the network board is not working properly, turn the printer off, and then check the LAN cable connection, hub operation, and network board installation.

Removing the Network Board

Remove the network board using the following procedure. Prepare the protective plate for the expansion board slot that you removed when you installed the network board.

CAUTION

- **Make sure that the printer is turned off and that all interface cables and power cord are disconnected from the printer before removing the network board. Attempting to remove the board with the power on may result in electrical shock.**
- **Take care when you are handling the network board. Do not touch the corners or sharp areas of the network board as may cause personal injury.**

1 **Press the power switch to turn the printer off, remove the USB cable, and disconnect the power plug from the power outlet.**

2 **Remove all the interface cables and the power cord from the printer.**

3 **Remove the 2 screws and remove the network board.**

Store the network board in the protective bag that it came in.

IMPORTANT

- Do not touch any of the components, printed wiring, or connectors on the network board.
- The screws that were removed are used to attach the protective plate.

4 **Attach the protective plate to the expansion slot and secure it with the screws.**

5 **Connect the interface cables except for the USB cable, and connect the power cord.**

6 **Plug the power plug into the AC power outlet.**

7 **Connect the USB cable.**

Troubleshooting

7

CHAPTER

This chapter describes the solutions to problems such as a paper jams and poor printing quality.

Troubleshooting Map 7-2

Alarm Indicator 7-3

Paper Jams 7-4

- Paper Jam Inside the Printer 7-6
- Paper Jam Behind the Printer 7-13
- Paper Jam in the Drum Cartridge 7-26

Service Call 7-28

Print Quality Problems 7-30

When Nothing is Printed 7-40

Installation Problems 7-41

- Problems During Local Installation 7-47
- Problems sharing the printer 7-48

Miscellaneous Problems 7-49

Troubleshooting Map

If any problem occurs while you are using the printer, follow the flow chart shown below to check the source of the problem.

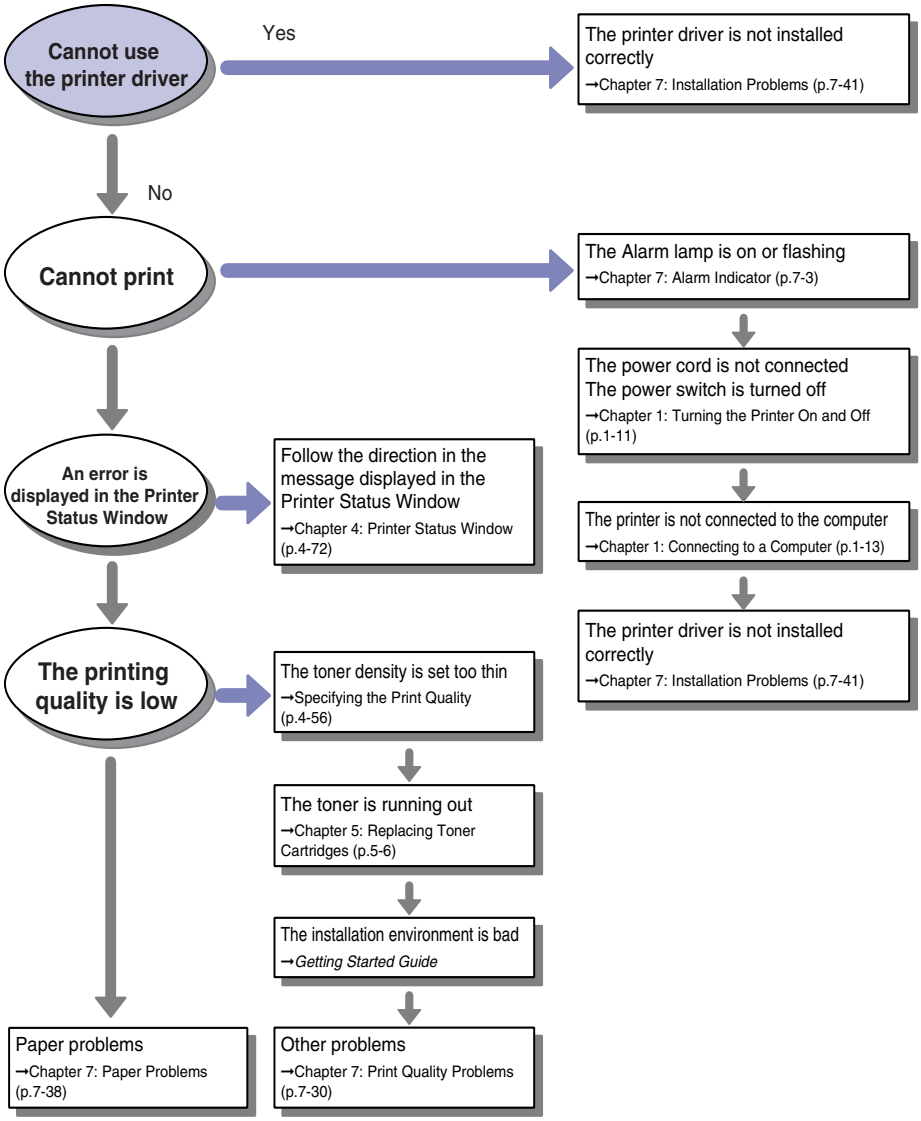

Alarm Indicator

If a problem occurs in the printer, the Alarm indicator (red) lights up or blinks.

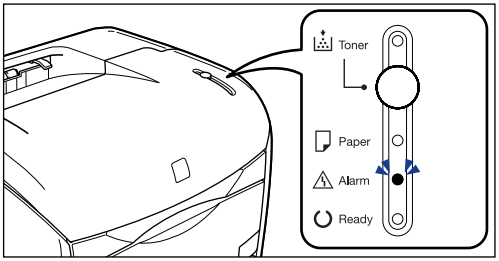

When the Alarm lamp is on, a service error is occurring. In this case, refer to "Service Call," on p. 7-28.

If the Alarm lamp is blinking, follow the directions displayed in the Printer Status Window.

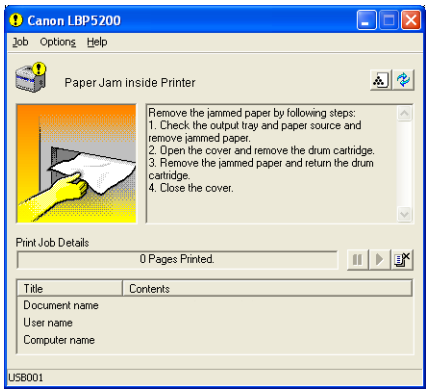

Paper Jams

The following messages are displayed in the Printer Status Window when a paper jam occurs during printing.

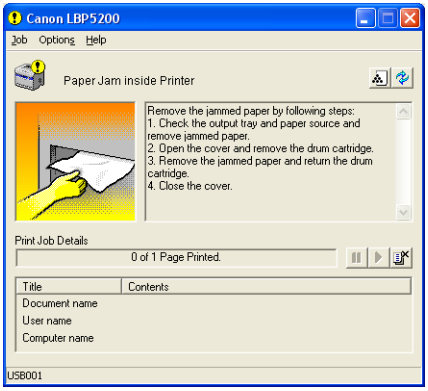

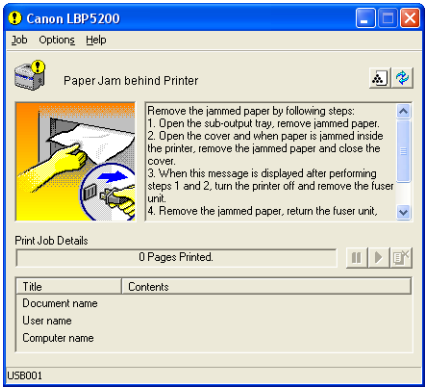

Remove the jammed paper according to the displayed message.

Message	Procedure for Clearing the Paper Jam
Paper Jam inside Printer	"Paper Jam Inside the Printer," on p. 7-6
Paper Jam behind Printer	"Paper Jam Behind the Printer," on p. 7-13

WARNING

There is a high-voltage unit inside this product. When you are clearing paper jams or inspecting the interior of the printer, make sure that a necklace, bracelet, or other metallic object does not touch the inside of the printer. Doing so may cause an electrical shock.

CAUTION

- **Never touch the electrical contacts or gears inside the top cover. Doing so may cause an electrical shock or personal injury.**

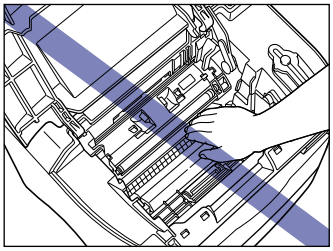

- **Be careful to avoid staining your clothes or hands with toner while you are clearing a paper jam. If you get any toner on your hands or clothes, wash it off immediately with cold water. Do not rinse with hot water, as this can fix the toner, creating a stain that cannot be removed.**
- **When you are clearing jammed paper from inside the printer, remove the paper gently so that toner that is on the jammed paper does not spray out of the printer. This could lead to toner getting in your eyes or mouth. If toner gets into your eyes or mouth, wash it out immediately with cold water and consult a doctor.**
- **When removing jammed paper, take care not to cut your hands with the edges of the paper.**

IMPORTANT

- You can clear jammed paper with the printer power left on. If you turn the power off, the current printer data will be lost. If you turn the printer off to clear a paper jam from the back of the printer, the current printer data will be lost.
- If you tug too hard on jammed paper, the paper can tear and the internal components may be damaged. When you are pull out jammed paper, pull it out in the correct direction depending on the location.
- If paper is torn, be sure to find and remove any remaining pieces of paper.
- If you clear the jammed paper without opening the top cover, the error message may not clear. In this case, open and close the top cover once.

Paper Jam Inside the Printer

If the message [Paper Jam inside Printer] appears in the Printer Status Window, remove the paper using the following procedure.

1 **If paper is jammed in the output tray, pull out the jammed paper.**

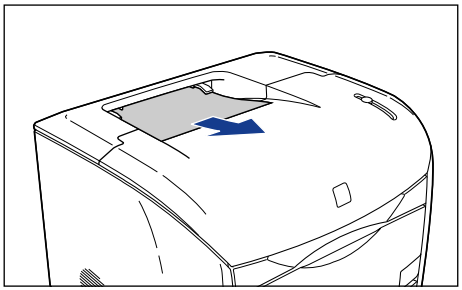

2 **If paper is jammed in the multi-purpose tray, pull out the jammed paper.**

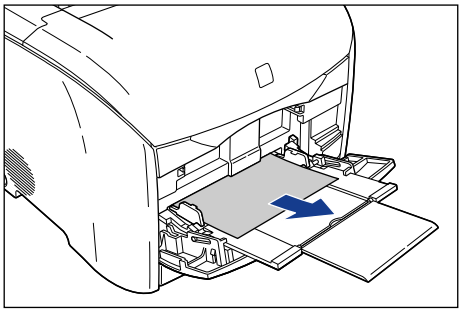

IMPORTANT

If the jammed paper cannot be removed easily, proceed to the next step. Do not try to remove the paper forcefully.

3 If the 250-sheet paper feeder is installed, perform the following procedure.

- **Pull out the paper cassette.**

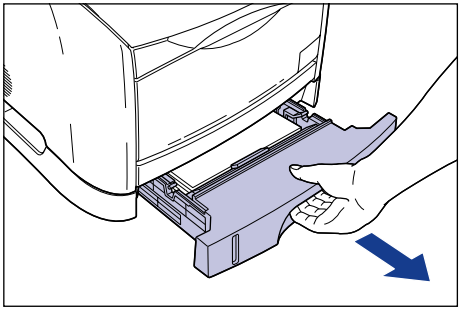

- **Pull out any jammed paper.**

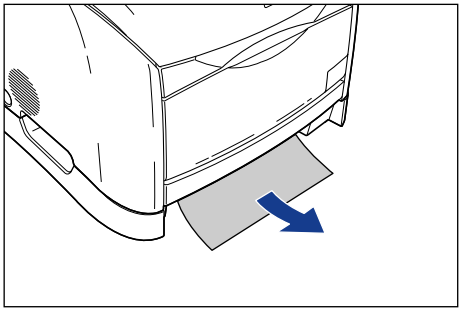

IMPORTANT

If the jammed paper cannot be removed easily, proceed to the next step. Do not try to remove the paper forcefully.

- **Insert the paper cassette into the printer.**

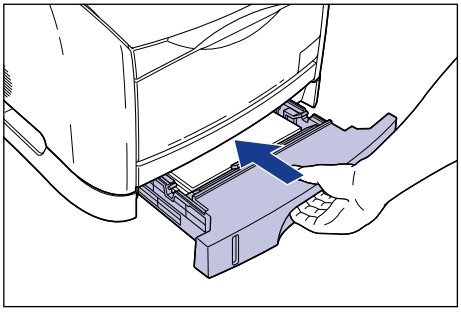

4 Open the top cover.

Hold the grip on the top cover and open it until it stops.

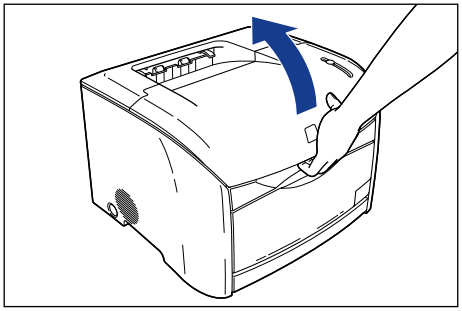

5 Remove the drum cartridge from the printer.

Push the drum cartridge in the direction of the arrow ①, and lift it straight up ②.

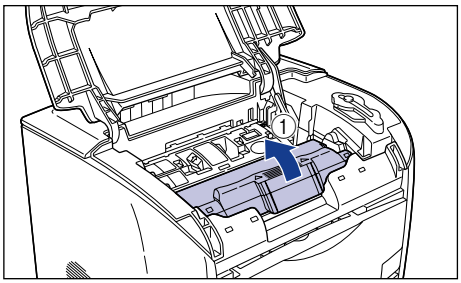

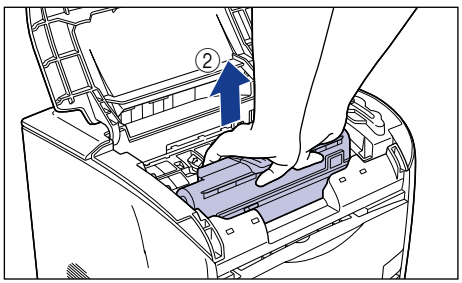

If paper is jammed in the drum cartridge, do not try to pull the paper out forcefully but refer to "Paper Jam in the Drum Cartridge," on p. 7-26.

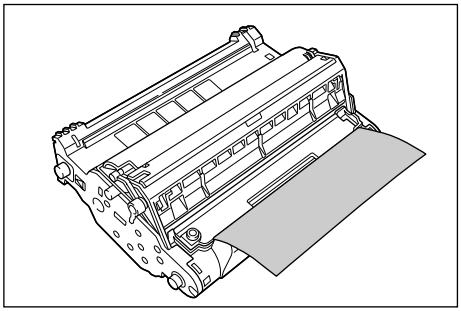

IMPORTANT

- If you touch the inner drum with your hand or scratch it, the printing quality will be degraded. Do not touch or open the drum protective shutter under any circumstances. Be careful not to hold or touch sensitive areas such as the sensor or electrical contacts. Doing so may damage the drum cartridge.

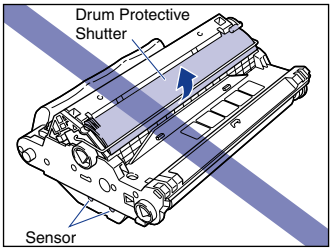

- Do not expose the drum cartridge to direct sunlight or strong light.

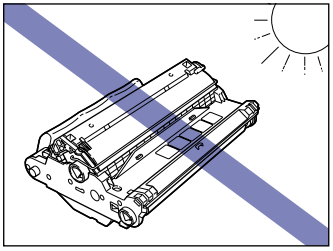

- Do not hold or touch the electrical contacts. Doing so may damage the drum cartridge.

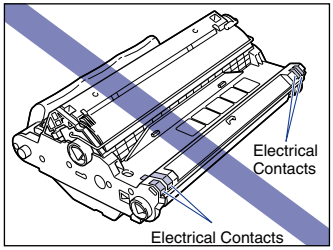

- Do not hold or touch the transfer belt. Doing so will degrade the printing quality. Do not jolt the drum cartridge memory or bring it near a magnetic field. Doing so may damage the drum cartridge.

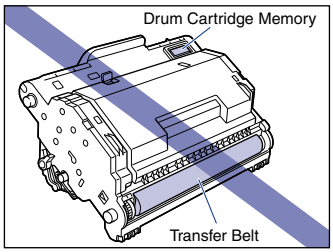

6 Place the drum cartridge in the protective bag.

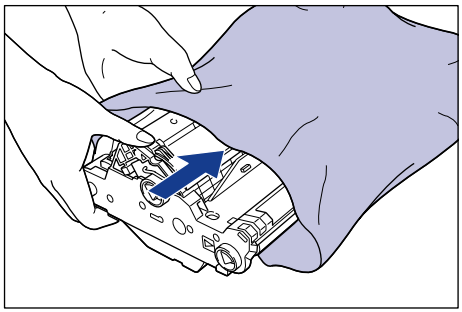

7 Press the green lock release lever ① and pull out the jammed paper ②.

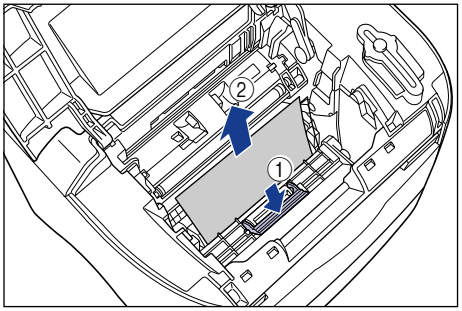

8 Take the drum cartridge out of the protective bag.

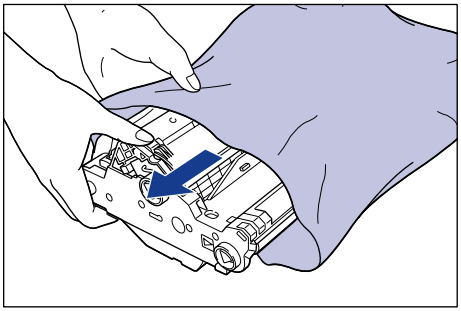

9 Hold the drum cartridge with both hands and insert it into the printer.

Align the triangular mark on the drum cartridge with the triangular mark on the printer as you insert the drum cartridge ①.

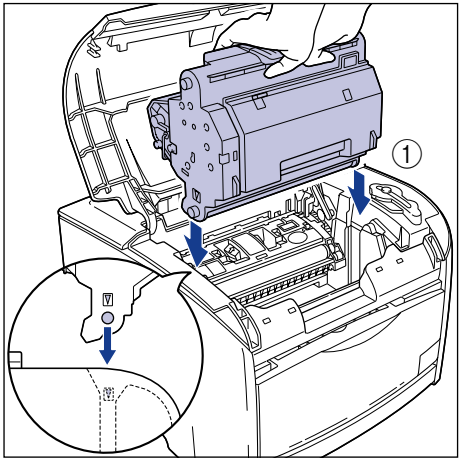

Lock the drum cartridge by pulling it down toward you ②.

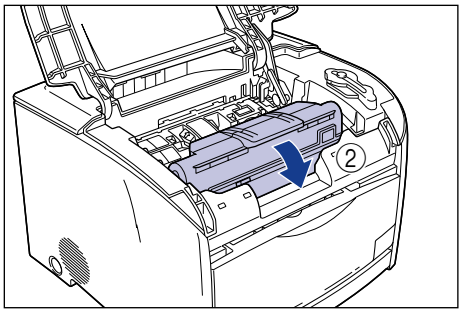

IMPORTANT

Firmly lock the drum cartridge until it is in the state shown in the figure.

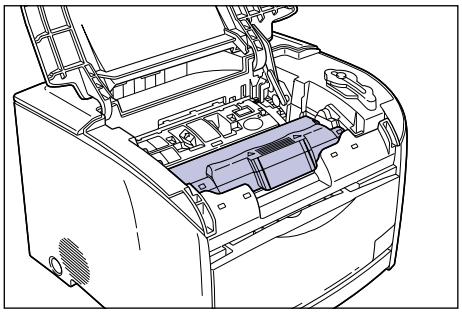

10 Close the top cover.

Hold the grip on the top cover and close it gently.

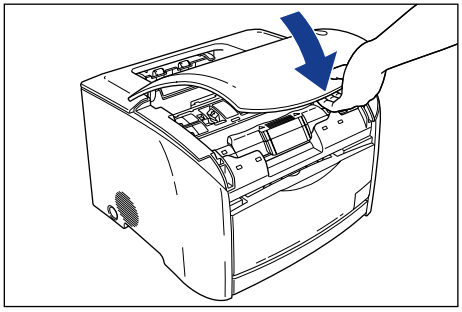

If a message continues to appear in the Printer Status Window about paper jammed inside the printer when the top cover is closed, there is a possibility that torn pieces of paper are still left inside the printer. Inspect each part of the printer again, and completely remove all pieces of jammed paper.

Paper Jam Behind the Printer

If the message [Paper Jam behind Printer] appears in the Printer Status Window, remove the jammed paper using the following procedure.

CAUTION

The fuser unit becomes hot when the printer is in use. Be careful to avoid touch the areas around the fuser unit. Doing so may cause burns.

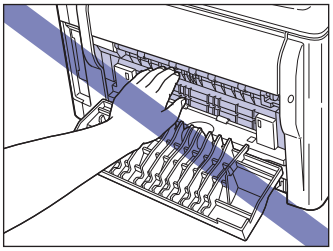

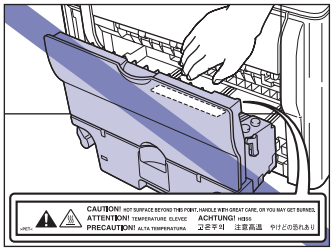

1 **Open the sub-output tray.**

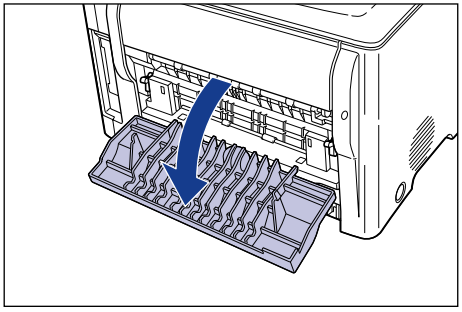

2 **Tilt both the green pressure release levers on the left and right side of the fuser unit towards you to release the pressure in the fuser unit.**

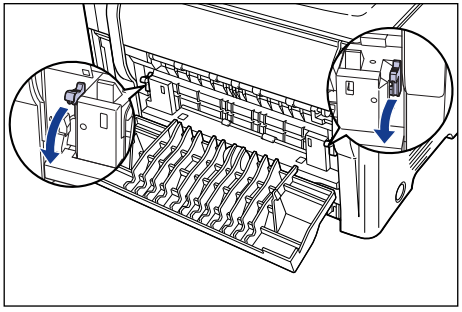

3 **Pull out any jammed paper.**

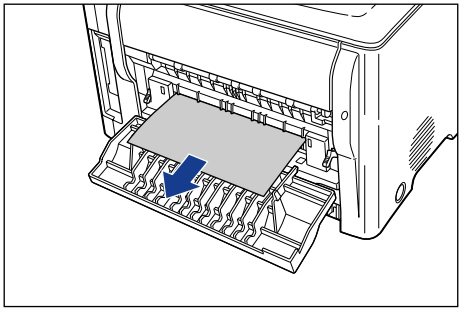

4 Open the top cover.

Hold the grip on the top cover and open it until it stops.

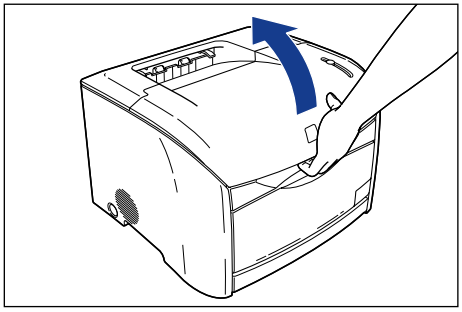

5 Remove the drum cartridge from the printer.

Push the drum cartridge in the direction of the arrow ①, and lift it straight up ②.

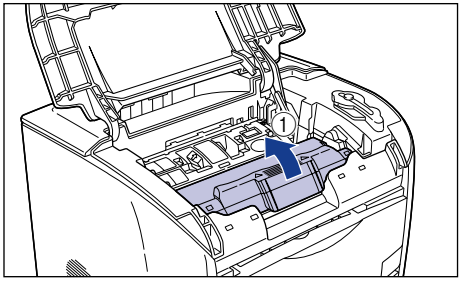

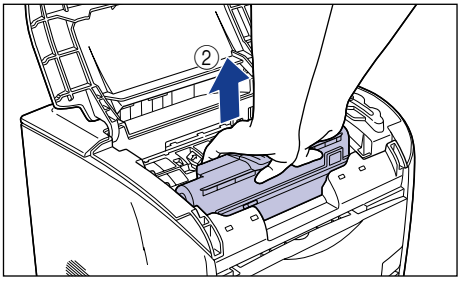

If paper is jammed in the drum cartridge, do not try to pull the paper out forcefully but refer to "Paper Jam in the Drum Cartridge," on p. 7-26.

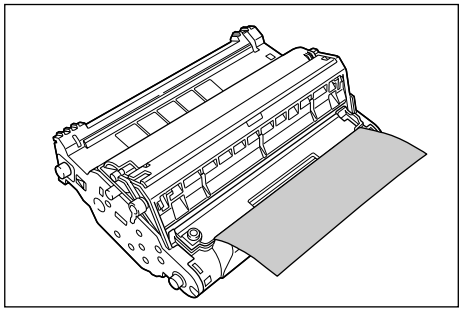

IMPORTANT

- If you touch the inner drum with your hand or scratch it, the printing quality will be degraded. Do not touch or open the drum protective shutter under any circumstances. Be careful not to hold or touch sensitive areas such as the sensor or electrical contacts. Doing so may damage the drum cartridge.

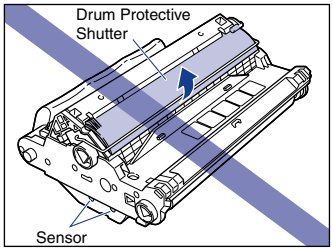

- Do not expose the drum cartridge to direct sunlight or strong light.

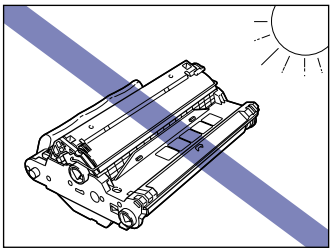

- Do not hold or touch the electrical contacts. Doing so may damage the drum cartridge.

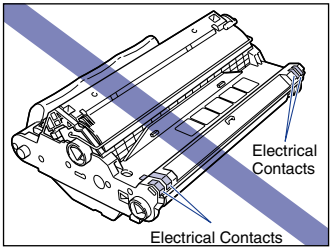

- Do not hold or touch the transfer belt. Doing so will degrade the printing quality. Do not jolt the drum cartridge memory or bring it near a magnetic field. Doing so may damage the drum cartridge.

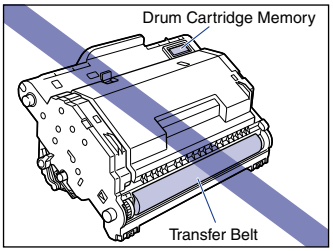

6 Place the drum cartridge in the protective bag.

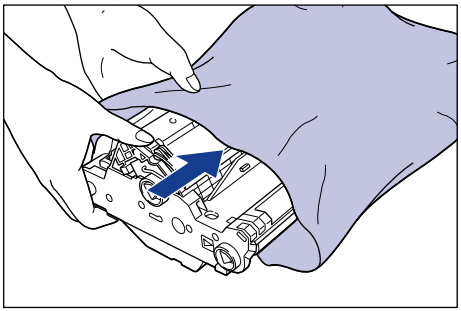

7 Press the green lock release lever ① and pull out the jammed paper ②.

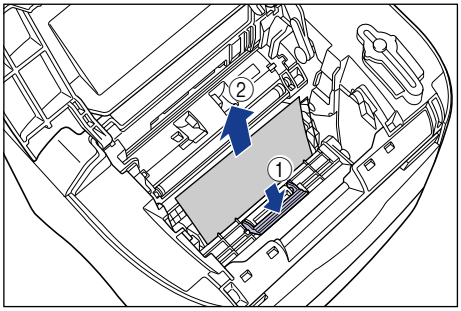

IMPORTANT

If you could not find the jammed paper using the above procedures, it is possible that the paper is jammed inside the fuser unit in the back of the printer. In this case, skip steps 7 to 9 and follow step 10 (→ p. 7-20) onwards to clear the jam. Do not close the top cover of the printer while you follow these steps. Doing so may make the paper jam even harder to clear. Once you have cleared the paper jam from inside the fuser unit, follow steps 7 to 9 to install the drum cartridge.

8 Take the drum cartridge out of the protective bag.

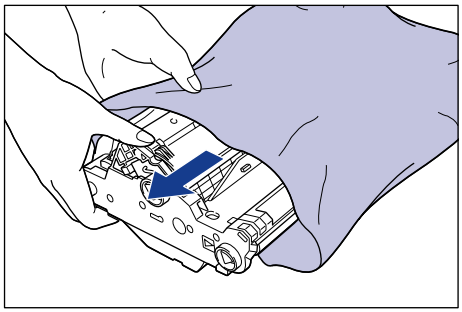

9 Hold the drum cartridge with both hands and insert it into the printer.

Align the triangular mark on the drum cartridge with the triangular mark on the printer as you insert the drum cartridge ①.

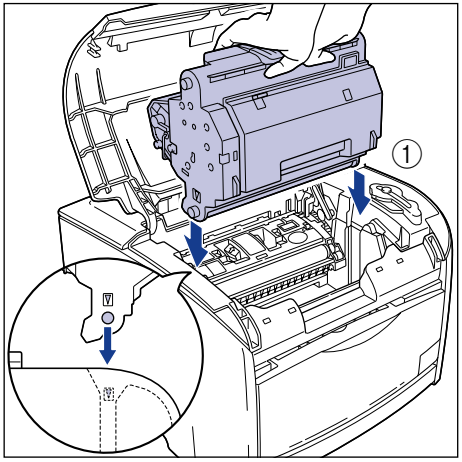

Lock the drum cartridge by pulling it down toward you ②.

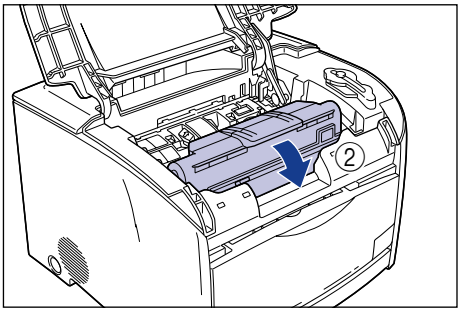

IMPORTANT

Firmly lock the drum cartridge until it is in the state shown in the figure.

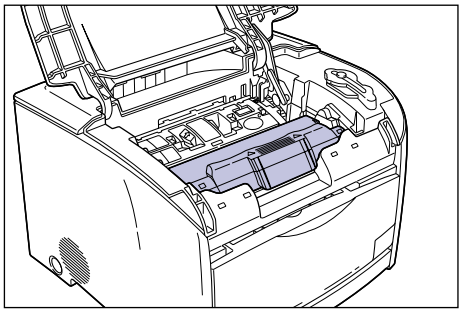

10 Close the top cover.

Hold the grip on the top cover and close it gently.

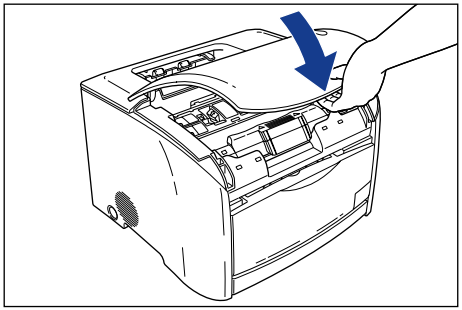

If the paper jam message is still displayed after closing the top cover, proceed to the following procedure.

11 If the paper jammed message is not cleared, press the power switch to turn the printer off ①, remove the USB cable ②, and disconnect the power plug from the power outlet ③.

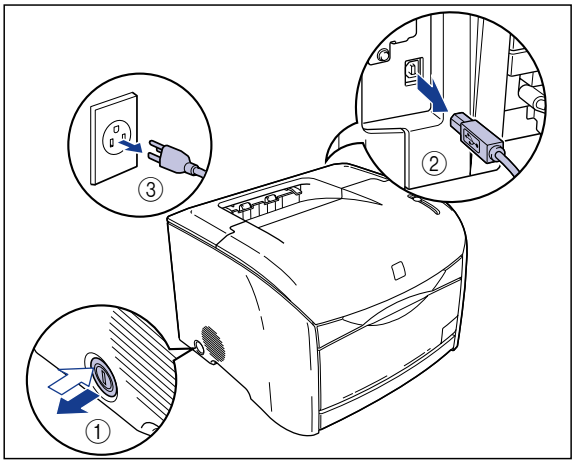

CAUTION

The area around the fuser unit becomes hot when the printer is used. Make sure the fuser unit is completely cool before performing the following procedure. If you touch the fuser unit while it is still hot you may be injured.

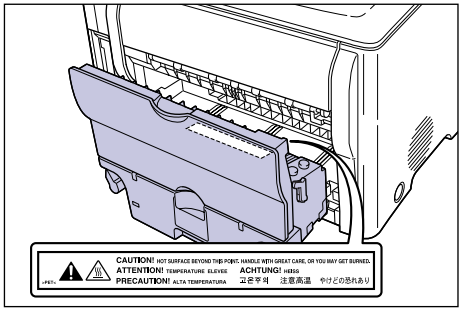

12 Return the green pressure release levers on the fuser unit to their original positions.

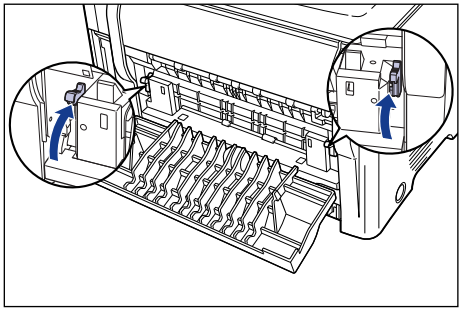

13 Close the sub-output tray.

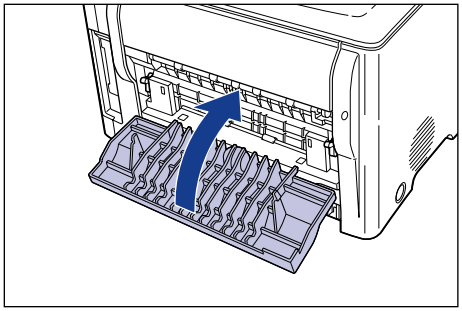

14 Turn the two lock release levers located on the back of the printer in the direction of the arrows to release the lock.

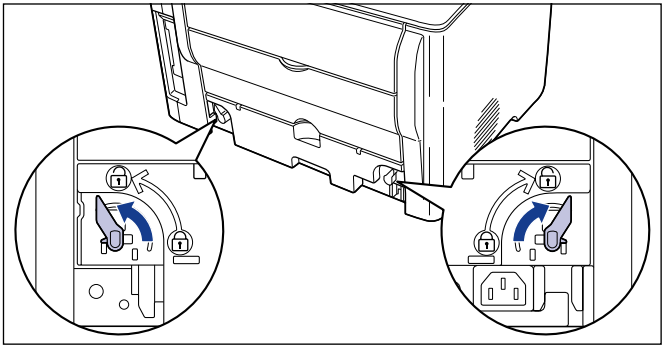

15 Hold the grip on the fuser unit and remove it.

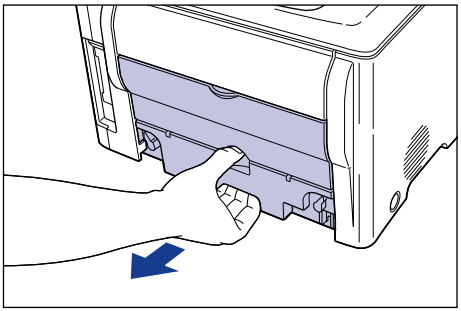

CAUTION

The fuser unit weighs approximately 1.7 kg, and is heavier at the rear end. Make sure you have a firm grip when you hold the fuser unit. If you drop the fuser unit on your feet you may be injured.

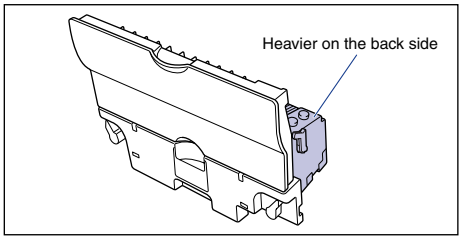

16 Open the sub-output tray.

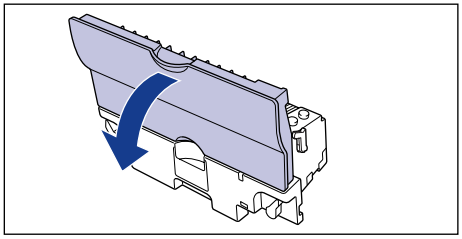

17 Tilt both the green pressure release levers on the left and right side of the fuser unit towards you to release the pressure in the fuser unit.

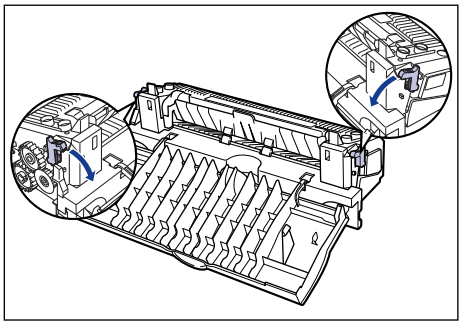

18 Pull out any jammed paper.

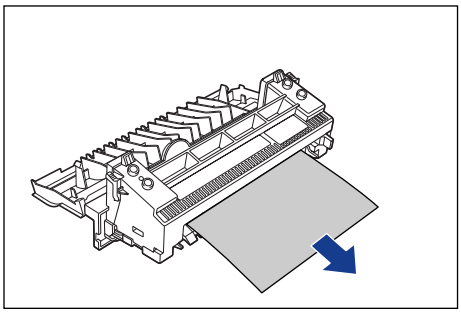

IMPORTANT

If the paper is completely wound around the fusing roller and is impossible to remove, contact your Canon dealer.

19 **Return the green pressure release levers on the fuser unit to their original positions.**

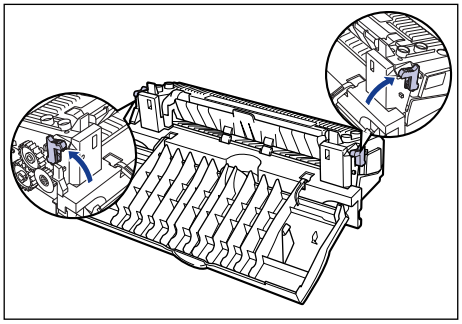

20 **Close the sub-output tray.**

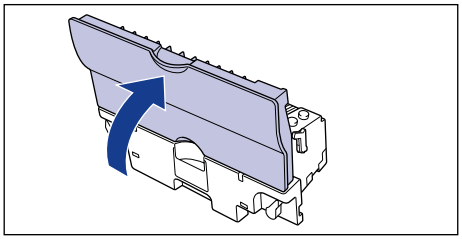

21 **Hold the grip on the fuser unit and install it securely.**

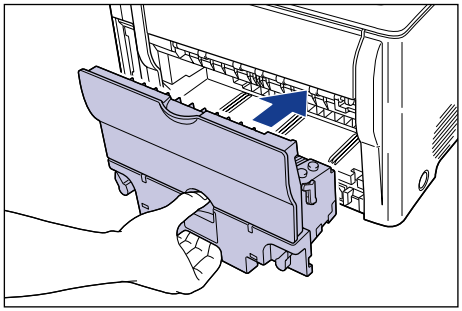

22 Lock the fuser unit by turning the two lock release levers in the directions of the arrows.

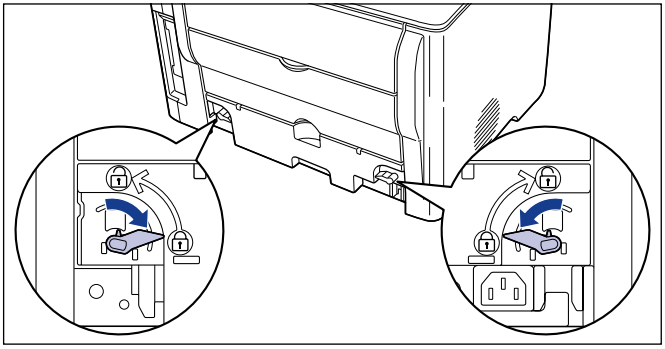

23 Connect the interface cables except for the USB cable, and connect the power cord.

24 Plug the power plug into the AC power outlet.

25 Connect the USB cable.

26 Press the power switch to turn the printer on.

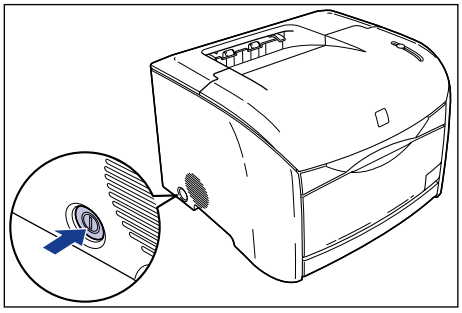

If a message continues to appear in the Printer Status Window about paper jammed behind the printer when the printer is turned on, there is a possibility that torn pieces of paper are still left inside the printer. Inspect each part of the printer again, and completely remove all pieces of jammed paper.

Paper Jam in the Drum Cartridge

If paper is jammed in the drum cartridge as shown in the figure, remove the jammed paper using the following procedure.

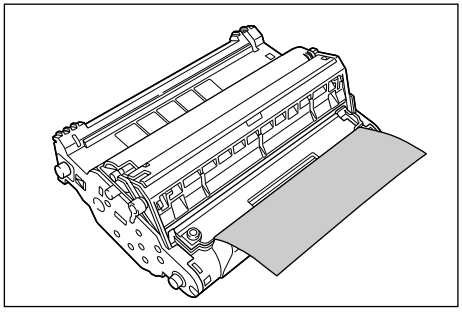

1 **Turn the knob on the drum cartridge in the direction of the arrow.**

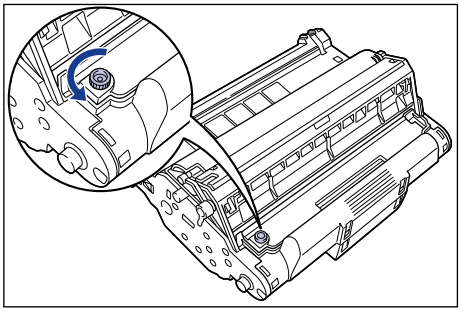

2 Lift the cover ① and remove the jammed paper ②.

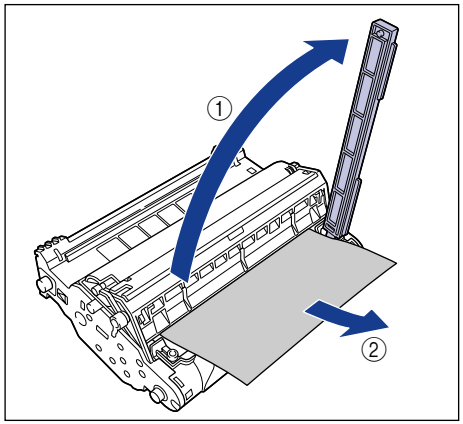

IMPORTANT

Do not touch the transfer belt. Doing so will degrade the printing quality.

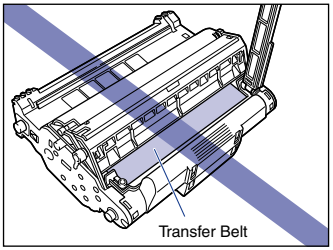

3 Return the cover to its original position ① and turn the knob in the direction of the arrow ②.

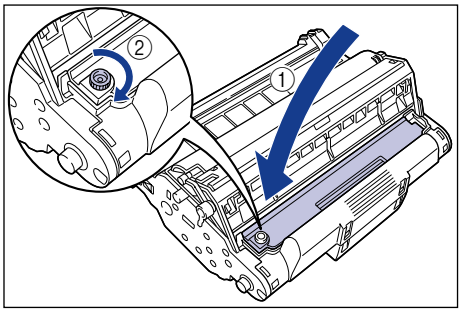

Proceed to the next step to remove the jammed paper.
When removing paper jammed inside the printer → Step 6 on p. 7-10
When removing paper jammed behind the printer → Step 6 on p. 7-17

Service Call

When the printer malfunctions and the problem cannot be resolved, the Alarm indicator (red) illuminates and the following service call is displayed in the Printer Status Window.

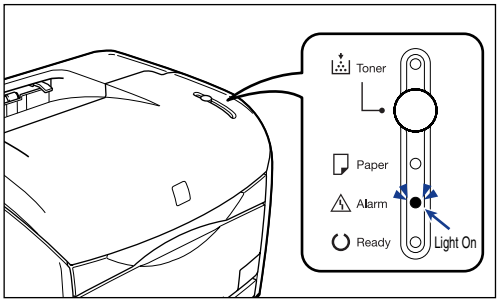

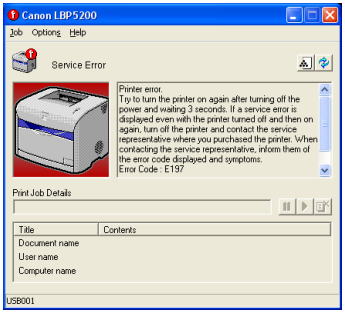

If the service call appears, cycle the power of the printer using the following procedure. This may clear the message.

1 **Turn the printer off, wait for 3 or more seconds, then turn the printer on again.**

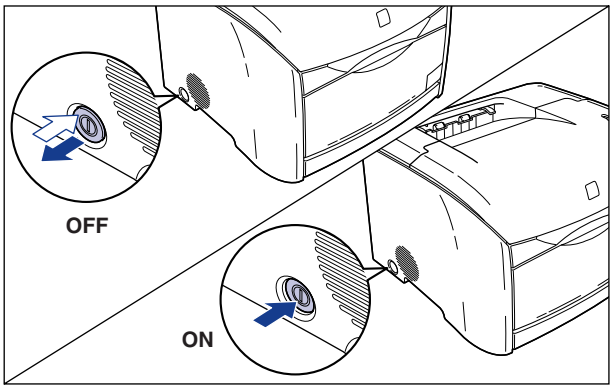

If the message does not reappear, continue using the printer as normal. If the message reappears, proceed to the next step.

2 Note down the error code displayed in the Printer Status Window.

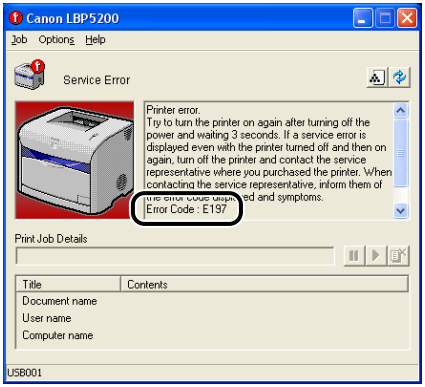

3 Press the power switch to turn the printer off ①, remove the USB cable ②, and disconnect the power plug from the power outlet ③.

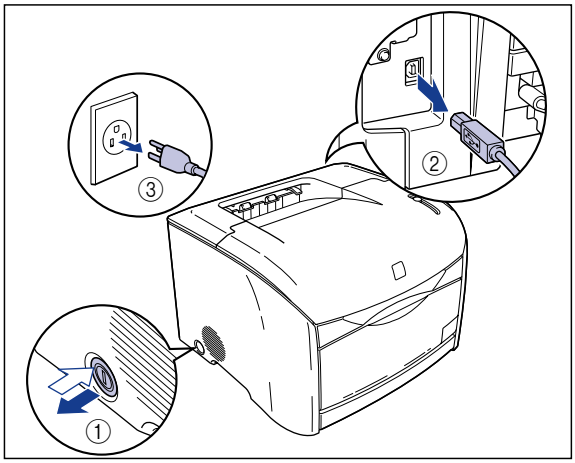

4 Contact your local authorized Canon dealer.

When contacting your Canon dealer, please report the problems you experienced and the error code that you wrote down.

Print Quality Problems

If any problem occurs while you are using the printer, take the following measures depending on the symptoms.

IMPORTANT

- If a message appears in the Printer Status Window, follow the directions in the message.
- In the case of a paper jam, refer to "Paper Jams," on p. 7-4.
- If a symptom occurs that is not mentioned in this section, or if none of the solutions listed here solve the problem, or if you cannot determine the cause of the problem, contact your local authorized Canon dealer.

White streaks appear.

Cause	The drum in the drum cartridge has deteriorated or is damaged.
Remedy	Replace the drum cartridge with a new one. (See "Replacing the Drum Cartridge," on p. 5-17.)

Printed pages have white specks.

Cause 1	Paper is inappropriate.
Remedy	Replace the paper with one of the usable paper types and print again. (See "Paper Requirements," on p. 2-2.)
Cause 2	Paper is damp because it was stored in a bad environment.
Remedy	Replace the paper with new paper and print again. (See "Paper Requirements," on p. 2-2.)
Cause 3	The drum in the drum cartridge has deteriorated.
Remedy	Replace the drum cartridge with a new one. (See "Replacing the Drum Cartridge," on p. 5-17.)

Residual images appear on non-printed areas.

Cause 1	Printing paper is inappropriate.
Remedy	Change the paper or transparencies and print again. (See "Paper Requirements," on p. 2-2.)

Cause 2	The last printed page comes out dark in color.
Remedy	Set the [Special Print Mode] in the printer driver to [Special Settings 3]. If this solves the problem, set the [Special Print Mode] back to [Off]. Update the [Special Print Mode] in the [Finishing Details] dialog box by clicking [Finishing Details] in the [Finishing] sheet.
Cause 3	The paper is too thin.
Remedy 1	Set the [Paper Type] in the printer driver to [Plain Paper]. Open the [Paper Source] sheet to change the [Paper Type] setting.
Remedy 2	Set the [Special Print Mode] in the printer driver to [Special Settings 6]. If this solves the problem, set the [Special Print Mode] back to [Off]. Update the [Special Print Mode] in the [Finishing Details] dialog box by clicking [Finishing Details] in the [Finishing] sheet.

IMPORTANT

If none of the above actions solve the problem, the fuser unit is probably at the end of its life. It is recommended that you replace the fuser unit. The life of the fuser unit when printing A4 is approximately 50,000 pages.

Printouts appear faint overall.

Cause 1	The [Toner Density] setting is not appropriate.
Remedy	Drag the [Toner Density] slider in the printer driver toward [Dark]. Click [Details] in the [Quality] sheet and specify [Toner Density] in the [Details Settings] dialog box.
Cause 2	[Use Toner Save] is selected.
Remedy	Remove the checkmark from [Use Toner Save] in the printer driver. Click [Details] in the [Quality] sheet and specify [Use Toner Save] in the [Details Settings] dialog box.

Printout appear dark overall.

Cause 1	The [Toner Density] setting is not appropriate.
Remedy	Drag the [Toner Density] slider in the printer driver toward [Light]. Click [Details] in the [Quality] sheet and specify [Toner Density] in the [Details Settings] dialog box.
Cause 2	The printer is exposed to direct sunlight or strong light.
Remedy	Move the printer to a location that is not exposed to direct sunlight or strong light. Alternatively, separate the printer from the source of the strong light.

The printing is uneven.

Cause 1 Paper is too moist or too dry.

Remedy Replace the paper with new paper and print again. (See "Paper Requirements," on p. 2-2.)

Cause 2 The toner cartridge is nearing the end of its life.

Remedy Open the [Consumables/Counters] dialog box, and replace the toner cartridge that is almost empty with a new cartridge. (See "Replacing Toner Cartridges," on p. 5-2.)

The front or back of printouts are stained with black dots.

Cause The fixing roller is dirty.

Remedy Clean the fixing roller. (See "Cleaning the Fixing Roller," on p. 5-33.)

Toner blots are making longitudinal streaks (in the direction of paper outputted).

Cause 1 Paper is damp because it was stored in a bad environment.

Remedy Replace the paper with new paper and print again. (See "Paper Requirements," on p. 2-2.)

Cause 2 Paper is inappropriate.

Remedy Replace the paper with paper that can be used with this printer. (See "Paper Requirements," on p. 2-2.)

IMPORTANT

If none of the above actions solve the problem, the fuser unit is probably at the end of its life. It is recommended that you replace the fuser unit. The life of the fuser unit when printing A4 is approximately 50,000 pages.

Smudge marks of spattered toner appear around the text.

Cause 1 Paper is inappropriate.

Remedy Replace the paper with one of the usable paper types and print again. (See "Paper Requirements," on p. 2-2.)

Cause 2 The printer is installed in a dry environment.

Remedy Set the [Special Print Mode] in the printer driver to [Special Settings 2]. If this solves the problem, set the [Special Print Mode] back to [Off].
Update the [Special Print Mode] in the [Finishing Details] dialog box by clicking [Finishing Details] in the [Finishing] sheet.

Spots or streaks appear on black parts of the printed images.

Cause The printer is installed in a humid environment.

Remedy Set the [Special Print Mode] in the printer driver to [Special Settings 4]. If this solves the problem, set the [Special Print Mode] back to [Off].
Update the [Special Print Mode] in the [Finishing Details] dialog box by clicking [Finishing Details] in the [Finishing] sheet.

Images in which two or more colors are overlaid come out faint.

Cause 1 Paper is inappropriate.

Remedy Replace the paper with paper that can be used with this printer. (See "Paper Requirements," on p. 2-2.)

Cause 2 The printer is installed in a humid environment.

Remedy Set the [Special Print Mode] in the printer driver to [Special Settings 8]. If this solves the problem, set the [Special Print Mode] back to [Off].
Update the [Special Print Mode] in the [Finishing Details] dialog box by clicking [Finishing Details] in the [Finishing] sheet.

Streaks appear in the gradated portions when printing a figure with gradations.

Cause Gray compensation is used in the gray color portions of the "streaks" in the graphic.

Remedy Set [Use Pure Black] to [Never] in the printer driver.
Specify [Use Pure Black] in the [Details Settings] dialog box by clicking the [Details] in the [Quality] sheet.

A portion of a page did not print.

Cause 1 The scale factor is incorrect.

Remedy 1 Clear the checkmark from [Manual Scaling] in the printer driver. When this checkbox is cleared, the scaling factor is automatically determined based on the [Page Size] and [Output Size] settings.
Open the [Page Setup] sheet to change the [Manual Scaling] setting.

Remedy 2 Select [Manual Scaling] in the printer driver and enter an appropriate scale factor according to the paper size to be used.
Open the [Page Setup] sheet to change the [Manual Scaling] setting.

Cause 2	The paper is not loaded in the correct position.
Remedy	Load the paper properly. (See "Printing from the Multi-purpose Tray," on p. 2-15, "Printing from the Paper Cassette," on p. 2-34.)
Cause 3	A document with no margins was printed.
Remedy	Data cannot be printed within a 5 mm margin (10 mm for envelopes) on all sides of the paper. Therefore, you should secure a margin of 5 mm or more (10 mm or more for envelopes) around the data.

Print position is offset.

Cause 1	The [Gutter] is configured.
Remedy	Set the [Gutter] in the printer driver to [0]. Click [Gutter] in the [Finishing] sheet and specify [Gutter] in the [Gutter Settings] dialog box.
Cause 2	The "Top Margin" and "Paper Position" settings in the application are not configured properly.
Remedy	Update the [Top Margin] and [Paper Position] settings in the application. (→ Refer to the instruction manual supplied with your application.)

The next page is printed from halfway through the previous page.

Cause	The [Line Spacing] or [Lines/Page] settings in the application are incorrect.
Remedy	Update the [Line Spacing] and [Lines/Page] in the application so that data fits onto one page and print again. (→ Refer to the instruction manual supplied with your application.)

Nothing is printed on the paper.

Cause 1	The toner cartridge was installed with the sealing tape still attached.
Remedy	Remove the toner cartridge, pull away the sealing tape, and reinstall the cartridge. (See "Replacing Toner Cartridges," on p. 5-2.)
Cause 2	Multiple sheets of paper were fed at the same time.
Remedy	Line up the edges of the paper then re-load it in the paper cassette or the multi-purpose tray. In the case on transparencies, fun through the paper well then re-load it. (See "Printing from the Multi-purpose Tray," on p. 2-15, "Printing from the Paper Cassette," on p. 2-34.)

Paper comes out completely black.

Cause The drum in the drum cartridge has deteriorated.

Remedy Replace the drum cartridge with new one. (See "Replacing the Drum Cartridge," on p. 5-17.)

Toner does not fix onto paper completely.

Cause 1 Paper is inappropriate.

Remedy Replace the paper with paper that can be used with this printer. (See "Paper Requirements," on p. 2-2.)

Cause 2 Coarse paper is being used.

Remedy 1 Change the [Paper Type] in the printer driver to [Heavy Paper].
Open the [Paper Source] sheet to change the [Paper Type] setting.

Remedy 2 Set the [Special Print Mode] in the printer driver to [Special Settings 5]. If this solves the problem, set the [Special Print Mode] back to [Off].
Update the [Special Print Mode] in the [Finishing Details] dialog box by clicking [Finishing Details] in the [Finishing] sheet.

IMPORTANT

If none of the above actions solve the problem, the fuser unit is probably at the end of its life. It is recommended that you replace the fuser unit. The life of the fuser unit when printing A4 is approximately 50,000 pages.

Colored lines and text come out faint.

Cause Thin lines or text are being used.

Remedy Check [Prioritize Printing of Colored Lines and Text] in the printer driver.
Update [Prioritize Printing of Colored Lines and Text] in the [Details Settings] dialog box by clicking [Details] in the [Quality] sheet.

Colored text appears to be blurred.

Cause A bold font is being used for the colored text.

Remedy Select [Perceptual [Monitor Color Matched]] for [Matching Method] in the printer driver.
Specify [Matching Method] in the [Matching] sheet by checking [Manual Color Settings] in the [Quality] sheet and clicking [Color Settings].

Data is not printed in the correct color (specified color), or colored text appears blurred due to color deviation.

Cause 1	One of the four color-cartridges is almost out of toner, or the cartridge has deteriorated.
Remedy 1	Perform a calibration. (See "Calibrating the Printer," on p. 5-30.)
Remedy 2	Open the [Consumables/Counters] dialog box, and replace the toner cartridge that is almost empty with a new cartridge. (See "Replacing Toner Cartridges," on p. 5-2.)
Cause 2	Paper is inappropriate.
Remedy	Replace the paper with paper that can be used with this printer. (See "Paper Requirements," on p. 2-2.)
Cause 3	Data was sent before completing calibration, such as when the printer was first turned on.
Remedy	Make sure that the Ready lamp is on before sending data to the printer.

The colors of thin lines or filled-in patterns are different from the specified colors, or do not appear at all.

Cause 1	Some colors cannot be reproduced due to the combination of colors or patterns.
Remedy 1	Adjust the colors in the application and print again.
Remedy 2	Change the patterns with the application and print again.
Cause 2	The color may appear different depending on the fill-pattern.
Remedy	Readjust to a darker color and print again.

Fill-patterns are not printed in the correct color (specified color).

Cause	The fill-pattern of the print data and the dither pattern of the printer are interfering with one another.
Remedy 1	Do not specify a fill-pattern in the application and print again.
Remedy 2	Change the [Color Halftones] setting in the printer driver to [Gradation] or [Color Tone]. Specify [Color Halftones] in the [Details Settings] dialog box by clicking [Details] in the [Quality] sheet.

The displayed color and printed color differ when printing photos, etc.

Cause The method for adjusting color on the screen (RGB) and in the printer (YMCK) is different. Therefore, there may be cases when the color on the screen cannot be printed out exactly as it appears.

Remedy 1 Select [Perceptual [Monitor Color Matched]] for [Matching Method] in the printer driver.
Specify [Matching Method] in the [Matching] sheet by checking [Manual Color Settings] in the [Quality] sheet and clicking [Color Settings].

Remedy 2 Adjust [Gamma] in the printer driver.
Specify [Gamma] in the [Matching] sheet by checking [Manual Color Settings] in the [Quality] sheet and clicking [Color Settings].

Paper Problems

Paper comes out wrinkled.

Cause 1 Paper is not loaded properly in the paper cassette installed in the optional 250-sheet paper feeder.

Remedy Load paper in the paper cassette properly. (See "Printing from the Paper Cassette," on p. 2-34.)

Cause 2 Paper is loaded in the multi-purpose tray at an angle.

Remedy Load the paper in the multi-purpose tray straight. (See "Printing from the Multi-purpose Tray," on p. 2-15.)

Cause 3 Paper is damp because it was stored in a bad environment.

Remedy Replace the paper with new paper and print again. (See "Paper Requirements," on p. 2-2.)

IMPORTANT

If none of the above actions solve the problem, the fuser unit is probably at the end of its life. It is recommended that you replace the fuser unit. The life of the fuser unit when printing A4 is approximately 50,000 pages.

Paper curls.

Cause 1 Paper is damp because it was stored in a bad environment.

Remedy Replace the paper with new paper and print again. (See "Paper Requirements," on p. 2-2.)

Cause 2 Paper is inappropriate.

Remedy Replace the paper with paper that can be used with this printer. (See "Paper Requirements," on p. 2-2.)

Cause 3 Paper was output in the output tray.

Remedy If you are using paper that curls easily, change the output destination to the sub-output tray. (See "Output Tray Selection," on p. 2-14.)

Cause 4	The paper is too thin.
Remedy 1	Set the [Paper Type] in the printer driver to [Plain Paper]. Open the [Paper Source] sheet to change the [Paper Type] setting.
Remedy 2	Set the [Special Print Mode] in the printer driver to [Special Settings 6]. If this solves the problem, set the [Special Print Mode] back to [Off]. Update the [Special Print Mode] in the [Finishing Details] dialog box by clicking [Finishing Details] in the [Finishing] sheet.

White dust is attached to the printed transparencies.

Cause	The transparencies were printed just after another type of paper was printed continuously.
Remedy	If you print transparencies after printing continuously on normal paper, paper dust may adhere to the transparencies when they are output. If this is the case, use a soft cloth to wipe off the paper dust.

When Nothing is Printed

Check the following items if nothing prints when printing from an application:

1 Check if any error messages are displayed in the Printer Status Window.

IMPORTANT

If not, uninstall the CAPT software and install it again. (See "Uninstalling the CAPT Software," on p. 3-81.)

2 Print a test page.

Click [Print Test Page] in the [General] sheet in the [Printer Properties] dialog box.

■ If the test page prints correctly

You can print from the CAPT software. To check the application software, check that all of the printer settings are configured appropriately.

■ If the test page does not print

Uninstall the CAPT software, reinstall it, and print a test page again. (See "Uninstalling the CAPT Software," on p. 3-81.)

Installation Problems

If the "USB Class Driver" and "LBP5200 Printer Driver" cannot be installed properly, perform the following procedure to check for problems.

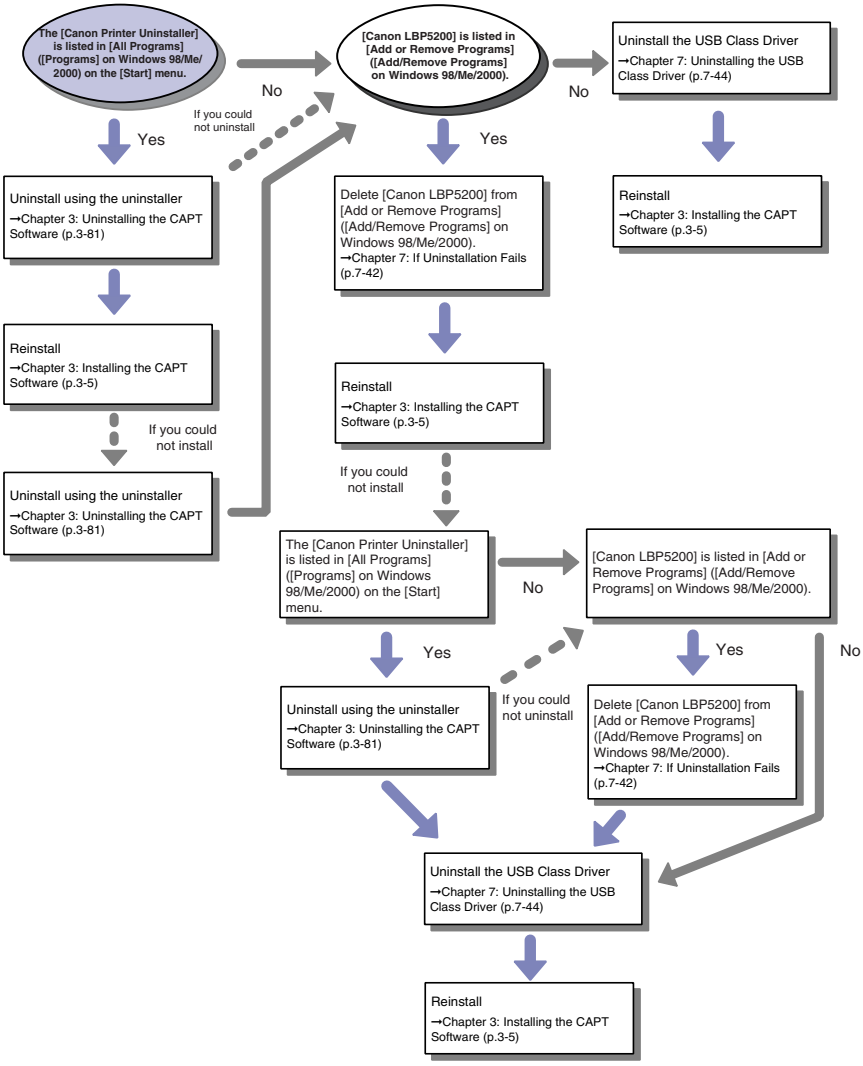

If Uninstallation Fails

If you cannot uninstall the CAPT software using the Uninstaller that was created during installation, use the following procedure to uninstall the CAPT software from [Add/Remove Programs] ([Add or Remove Programs] for Windows XP/Server 2003).

1 From the [Start] menu, select [Control Panel], and then click [Add or Remove Programs].

For Windows 98/Me/2000: From the [Start] menu, select [Settings] → [Control Panel], and then click [Add/Remove Programs].

2 Select the [Canon LBP5200] in the [Add or Remove Programs] dialog box, then click [Change/Remove].

For Windows 2000: Select the [Canon LBP5200] in the [Add/Remove Programs] dialog box, then click [Change/Remove].
For Windows 98/Me: Select the [Canon LBP5200] in the [Add/Remove Programs Properties] dialog box, then click [Add/Remove].

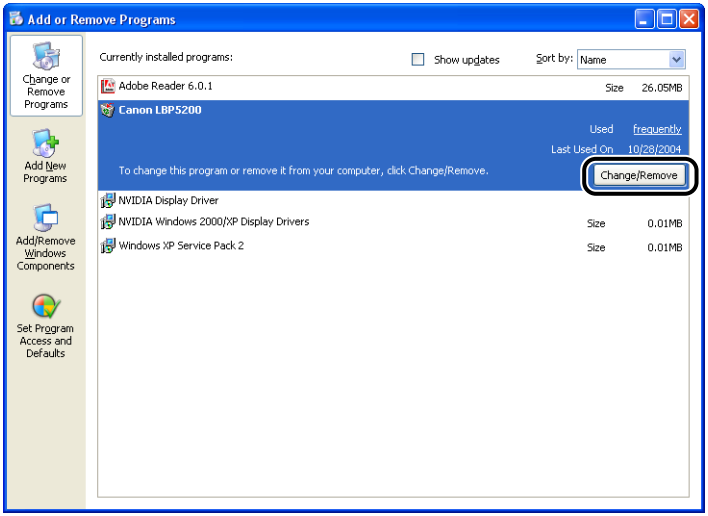

NOTE

If the [Canon LBP5200] is not displayed in the [Add or Remove Programs] dialog box (the [Add/Remove Programs] dialog box for Windows 98/Me/2000), perform "Uninstalling the USB Class Driver," on p. 7-44, then install the CAPT software again.

3 Select the name of this printer, then click [Delete].

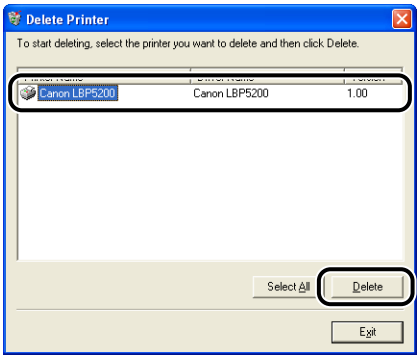

4 Click [Yes].

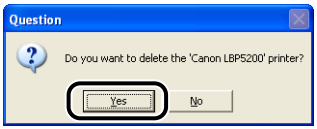

The uninstallation process begins. Please wait a moment.

5 Click [Exit].

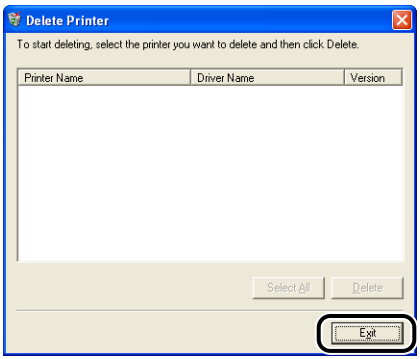

The [Delete Printer] dialog box closes.

6 Restart Windows.

Uninstalling the USB Class Driver

Uninstalling the USB class driver is required when you cannot install the CAPT software properly after uninstalling it once or when you cannot uninstall the CAPT software.

1 **Make sure that the computer is connected to the printer with the USB cable and that the printer is turned on.**

2 **From the [Start] menu, select [Control Panel], and then click [Add or Remove Programs].**

For Windows 98/Me/2000: From the [Start] menu, select [Settings] → [Control Panel], and then click [Add/Remove Programs].

3 **Make sure that [Canon LBP5200] does not appear in the [Add or Remove Programs] dialog box, and then click [ ].**

For Windows 98/Me/2000: Make sure that [Canon LBP5200] does not appear in the [Add/Remove Programs] dialog box, and then click [ ].

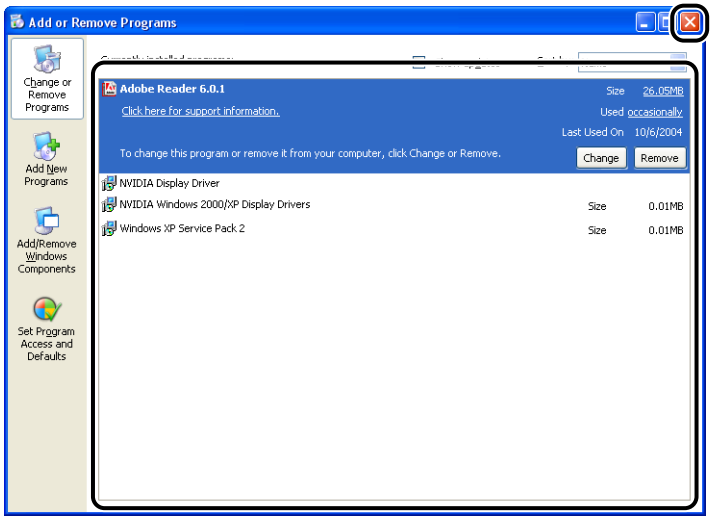

NOTE

If [Canon LBP5200] is displayed in the [Add or Remove Programs] dialog box (the [Add/Remove Programs] dialog box for Windows 98/Me/2000), refer to "If Uninstallation Fails," on p. 7-42 to delete [Canon LBP5200] from the [Add or Remove Programs] dialog box (the [Add/Remove Programs] dialog box for Windows 98/Me/2000).

4 From the [Start] menu, select [Control Panel], and then click [Performance and Maintenance] → [System].

For Windows 98/Me/2000: From the [Start] menu, select [Settings] → [Control Panel], and then double-click the [System] icon.

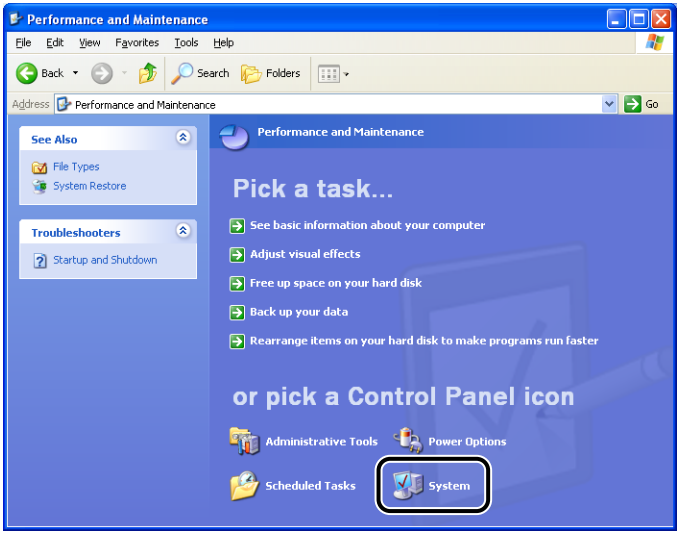

5 Click [Hardware] → [Device Manager], and then double-click [Universal Serial Bus controllers].

For Windows 98/Me: Open the [System Properties] dialog box, click the [Device Manager] tab, and then double-click [Universal Serial Bus controllers].

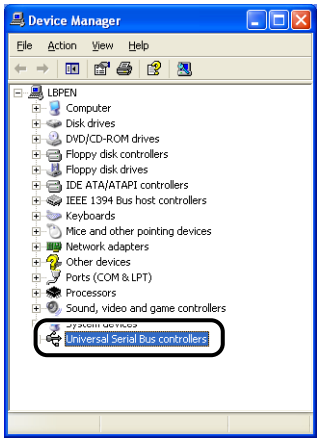

6 Select [USB Printing Support], then select [Uninstall] in the [Action] menu.

On Windows 98 select [Canon LBP5200] and on Windows Me, select [Canon CAPT USB Device], and then click [Remove].

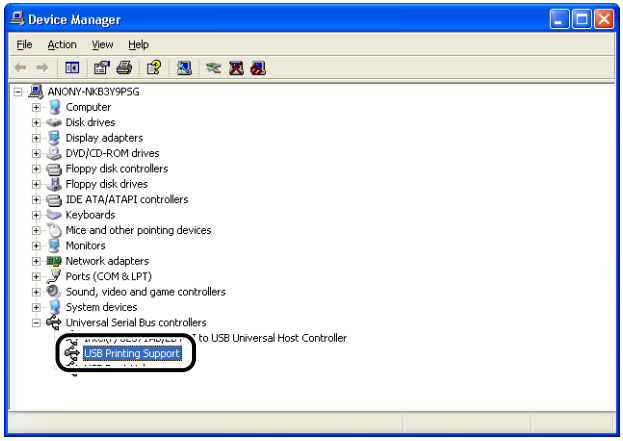

IMPORTANT

- You cannot install properly if the USB class driver is listed under [Other Devices]. Depending on your OS, select [Canon LBP5200], [Canon CAPT USB Printer] or [Unknown Device] and delete it.

- Do not delete any other devices or device drivers. If you delete the wrong thing by mistake, Windows may not be able to startup properly.
- If the USB class driver is not installed properly, [USB Printing Support] (for Windows 2000/XP/Server 2003), [Canon CAPT USB Device] (for Windows Me), or [Canon LBP5200] (for Windows 98) is not displayed.

7 When the [Confirm Device Removal] dialog box appears, click [OK].

8 Click [Close].

[System Properties] closes.

9 Disconnect the USB cable from the computer, then restart Windows.

After Windows restarts, reinstall the CAPT software. (See "Installing the CAPT Software," on p. 3-5.)

Problems During Local Installation

When installing the printer driver from the CD-ROM, the printer is not recognized automatically even after the USB cable is connected.

Cause 1	The USB cable was already connected and the printer turned on before installing the printer driver.
Remedy	Turn the printer off and disconnect the USB cable. Then, reconnect the USB cable again and turn the printer on.
Cause 2	The printer is turned off.
Remedy	Turn the printer on.

Cause 3	The USB cable is not connected properly.
Remedy	Make sure that the printer and computer are connected with the USB cable properly.
Cause 4	An unsuitable USB cable is being used.
Remedy	Use a USB cable that matches the USB interface on the printer. The USB interface on this printer is USB 2.0 High-Speed (Windows 2000/XP/Server 2003 only), USB Full-Speed (USB 1.1 equivalent).

[Local printer attached to this computer]* cannot be selected in the [Add Printer Wizard] dialog box (Windows 2000/XP/Server 2003).

Cause	Installation was performed by a user who is not a member of the Administrators group.
Remedy	CAPT (Canon Advanced Printing Technology) software needs to be installed by a member of the Administrators group. Have a user with the correct permissions install the software. * On Windows 2000, this becomes [Local Printer].

Problems sharing the printer

The print server to connect to cannot be found.

Cause 1	The print server has not been started up.
Remedy	Start up the print server.
Cause 2	The printer is not configured as a shared printer.
Remedy	Update the printer as a shared printer in the [Printer Properties] dialog box.
Cause 3	The user does not have permission to access the print server or printer.
Remedy	Ask your network administrator to change the user permissions.

Miscellaneous Problems

The LBP5200 does not function properly.

Cause 1 The LBP5200 is not configured as the default printer.

Remedy Set it to be the default printer.

Cause 2 The CAPT software may not be installed properly.

Remedy To check whether the CAPT software is installed correctly or not, try printing from an application. If this does not print correctly, try uninstalling and re-installing the CAPT software. (See "Uninstalling the CAPT Software," on p. 3-81, "Installing the CAPT Software," on p. 3-5.)

CD-ROM Setup does not appear automatically.

Cause 1 The [Always Display when CD is Inserted] option is not selected in CD-ROM Setup.

Remedy Right-click on the CD-ROM drive in [My Computer] and select [Open] to start CD-ROM Setup manually. Select [Always Display when CD is Inserted].

Cause 2 [Auto Insert Notification] is not selected. (Windows 98/Me only)

Remedy Open the properties of the CD-ROM drive in [Device Manager] and select [Auto Insert Notification] in the [Settings] sheet.

A "File not found on CD-ROM" error occurs when starting the CD-ROM Setup.

Cause The program is running from the hard disk.

Remedy Browse [CNAC3MNU.EXE] using the browse function of your computer, delete the CNAC3MNU.EXE file from the hard disk, and then start up CD-ROM Setup from the supplied CD-ROM "LBP5200 User Software".

When you are using a shared printer from your computer, it takes a long time to update the status on the Printer Status Window.

Cause	Your print server is installed with an operating system equipped with Windows Firewall, such as Windows XP Service Pack 2, and Windows Firewall is blocking communication with client computers.
Remedy	Start the print server and clear the block from Windows Firewall that is blocking communication with the client computers. (See "Windows Firewall," on p. 8-14.)

Appendix

8
CHAPTER

This chapter describes the specifications of the printer along with related terms, index, maintenance services, and the method for upgrading the software.

Specifications 8-2
Hardware Specifications 8-2
Software Specifications 8-5
Dimensions of Each Part 8-6
About Color Printing 8-7
The Three Primary Colors of Light and Color 8-7
Method for Expressing Color 8-8
About Color Printing 8-9
Achieving More Beautiful Color Printing 8-10
NetSpot Device Installer 8-12
NetSpot Console 8-13
Windows Firewall 8-14
Configuring Windows Firewall to unblock communication with client computers 8-14
Configuring Windows Firewall to block communication with client computers 8-16
Index 8-18
Location of the Serial Number 8-23

Specifications

Hardware Specifications

Type		Desktop Page Printer
Printing method		Electrophoto Method (On-demand fixing)
Print speed Plain paper (64 to 105 g/m^2)		When printing A4 continuously B&W 19 pages/min. Color 4 pages/min. * The printing speed drops in steps depending on the paper size, paper type, number of pages printed, and fixing mode settings. (This is a safety feature that prevents damage due to heat.)
Warm-up time		0 second (120 seconds or less when the printer is on)
First print time		Black and White: Approx. 17.6 seconds Color: Approx. 26.8 seconds * Time from when print data is received.
Paper Size	Multi-purpose Tray	A4, B5, A5, Legal, Letter, Executive, Envelope DL, Envelope COM10, Envelope C5, Envelope Monarch, Envelope B5, Index Card, Custom Paper Size (width 76.2 to 215.9 mm, height 127.0 to 355.6 mm) Paper capacity: Approx. 125 sheets (64 g/m^2)
	Cassette 1 (Optional)	A4, B5, A5, Legal, Letter, Executive Paper capacity: Approx. 250 sheets (64 g/m^2)
Finishing		Face-down / Face-up
Output capacity		Output tray (face-down): Approx. 125 sheets (64 g/m^2) Sub-output tray (face-up): 1 sheet
Noise (Sound value released based on ISO9296)		Audio Power Level During standby: Background noise level During operation: 6.8 B or less Sound pressure level (Bystander position) During operation: 54 dB [A] or less
Operating environment (Printer unit only)		Operating environment temperature: 10 to 30°C (50 to 86°F) Humidity: 10 to 80% RH (no condensation)
Storage environment (Printer unit only)		Storing environment temperature: 0 to 35°C (32 to 95°F) Humidity: 35 to 85% RH (no condensation)

Host interface	USB interface * Windows 98/Me: USB Full-Speed (USB1.1 equivalent) * Windows 2000/XP/Server 2003: USB 2.0 Hi-Speed/ USB Full-Speed (USB1.1 equivalent)
User interface	4 LED indicators 1 Operation key
Expansion Slot	1
Power Supply	100 to 127 V (±10%) 50/60 Hz (± 2 Hz) 220 to 240 V (±10%) 50/60 Hz (± 2 Hz)
Power consumption (20˚C or 68˚F)	100 to 127 V Average during operation: Approx. 444 W*1 Average during standby: Approx. 10.6 W*1 Maximum: 1188 W*2 or less 220 to 240 V Average during operation: Approx. 405 W*1 Average during standby: Approx. 13.7 W*1 Maximum: 1465 W*3 or less *1 The values are for when the printer is in a normal condition. *2 Power consumption is 1198 W or less when all optional equipments are installed. However, the momentum peak when the printer is turned ON is excluded. *3 Power consumption is 1475 W or less when all optional equipments are installed. However, the momentum peak when the printer is turned ON is excluded.

Consumables	Toner Cartridge	Canon Genuine Toner Cartridge (Black) Printable pages: Approx. 5000 pages* * For A4 or Letter size paper at 5% page coverage using the factory default print density setting
		Canon Genuine Toner Cartridge (Yellow) Canon Genuine Toner Cartridge (Magenta) Canon Genuine Toner Cartridge (Cyan) Printable pages: Approx. 4,000 pages* * For A4 or Letter size paper at 5% page coverage using the factory default print density setting
	Drum Cartridge	Canon Genuine Drum Cartridge Printable pages: Color Approx. 5,000 pages*1 B&W Approx. 20,000 pages*2 *1 For A4 or Letter size paper *2 Page counts are measured under Canon standard testing conditions, with continuous printing on A4 size plain paper. Depending on the intermittency of printing, paper types and paper sizes, the number of pages you can print may be half this number. (Printing intermittency refers to a constant fixed delay between prints.) The following is a rough guide to drum cartridge lifetimes under intermittent printing. For groups of 4 pages: Approx. 19,000 pages For groups of 2 pages: Approx. 13,500 sheets
	Fuser Unit	Canon Genuine Fuser KIT UM-96 Printable pages: Approx. 50,000 pages* * For A4 size paper
Weight	Main Printer Unit and Included Parts	Main Printer Unit and Included Parts Main Printer Unit ..... Approx. 17 kg* Toner Cartridges (each)..... Approx. 0.8 kg Drum Cartridge..... Approx. 2.5 kg Fuser Unit..... Approx. 1.7 kg * Excluding the toner and drum cartridges
	Consumables and Optional Accessories	Toner Cartridges (Canon Genuine Parts) (each) ..... Approx. 0.8 kg Drum Cartridge (Canon Genuine Parts) ..... Approx. 2.5 kg Fuser Unit..... Approx. 1.7 kg* 250-sheet Paper Feeder..... Approx. 2.5 kg * When the fuser unit is one of the following Canon genuine parts: Fuser KIT UM-96

Software Specifications

Printing software	CAPT (Canon Advanced Printing Technology)
Printable area	No printing within 5.0 mm of the top, bottom, left and right edges of the paper. (10 mm for envelopes).

Dimensions of Each Part

■ Printer

• Standard Installation

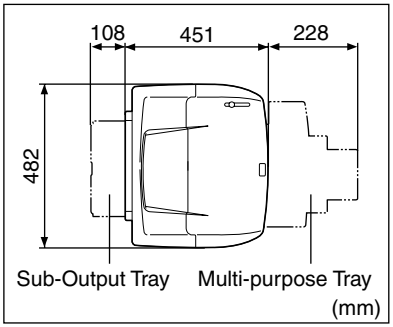

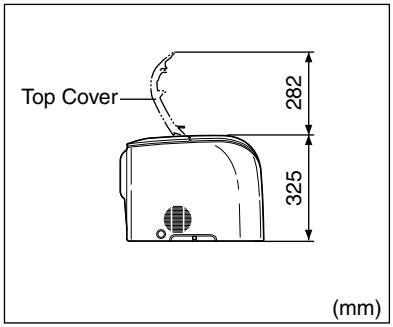

• 250 Page Paper Feeder Installed

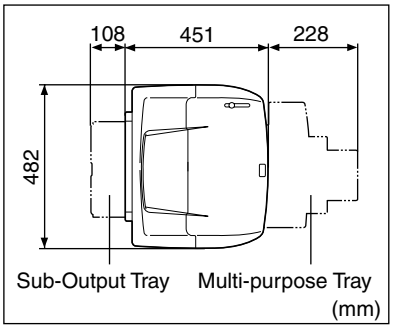

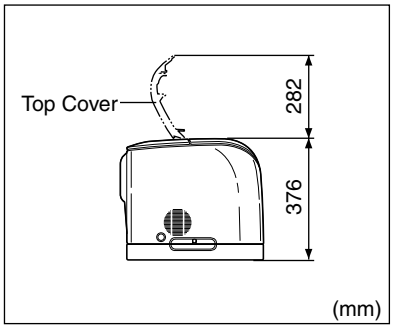

■ 250-sheet Paper Feeder

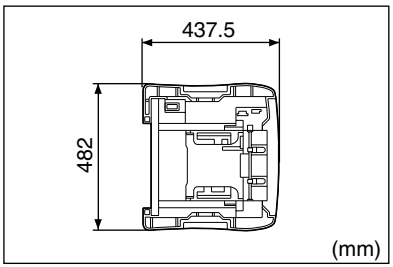

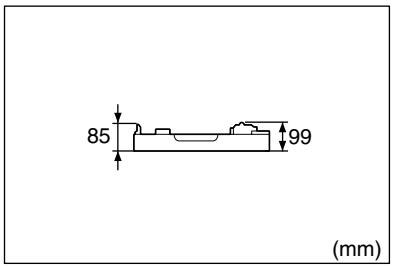

About Color Printing

This section describes the fundamentals of colors and the way this printer reproduces colors.

The Three Primary Colors of Light and Color

The colors that you see on a computer screen are reproduced from the three basic colors red, green and blue. The 3 primary colors of light, which are red, green and blue, can be combined to give white (additive color mixing).

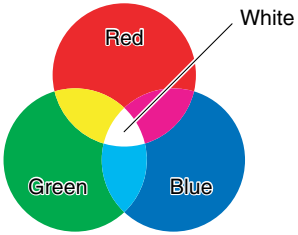

A color printer, however, does not use the 3 primary colors of light, but uses the same 3 primary colors as used in paintings to reproduce colors. If the 3 primary colors of paint, C (cyan), M (magenta) and Y (yellow) are mixed together, the resulting color is black (subtractive color mixing).

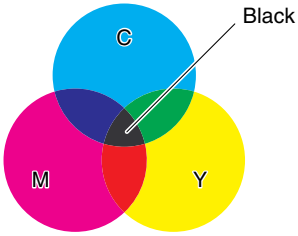

The three primary colors of light and color are thus in a complementary color relationship.
The red in light and cyan in color, green in light and magenta in color, and blue in light and yellow in color complement one another.

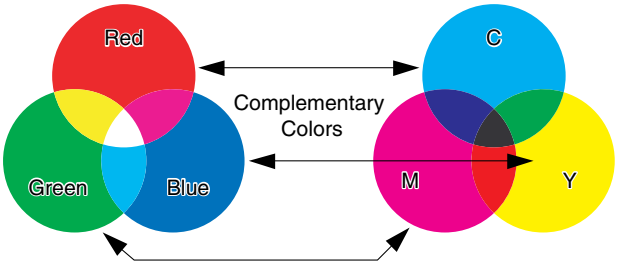

Method for Expressing Color

Creating colors for painting involves mixing the colors on a palette to get a match. In a computer display and printer, it is not possible to mix colors to match in the same way as paints, so colors are reproduced by groups of colored dots.

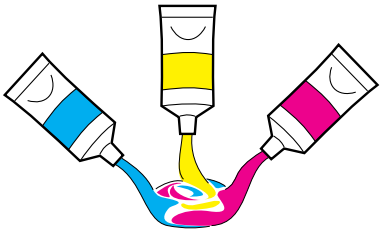

Paints

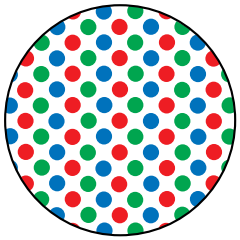

Monitors and Printers

On the computer display, various colors are reproduced by the intensity of three red, green, and blue dots.

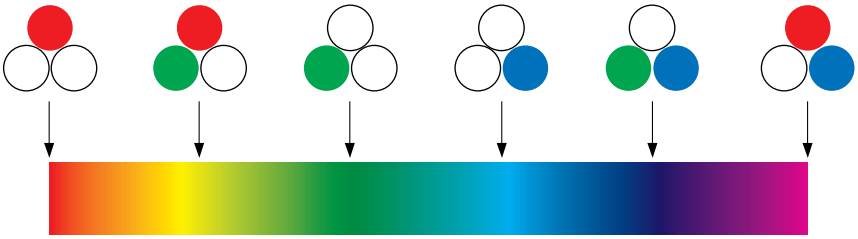

Color Bar

In the case of a printer, it is not possible to change the intensity of toner colors. Because of this, a much larger number of dots are used compared to a computer display, and various colors are reproduced by adding K (black) to the C (cyan), M (magenta) and Y (yellow). This means that higher resolution color prints are possible the smaller these dots are.

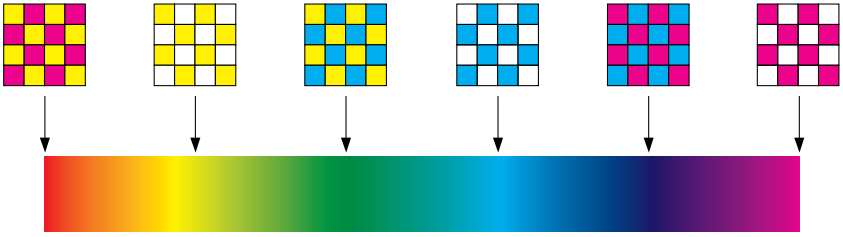

Color Bar

About Color Printing

In color printing, the shape and color of images are expressed in groups of minute cyan, magenta, yellow, and black dots.
Therefore, image data input to the printer is divided into cyan, magenta, yellow, and black.

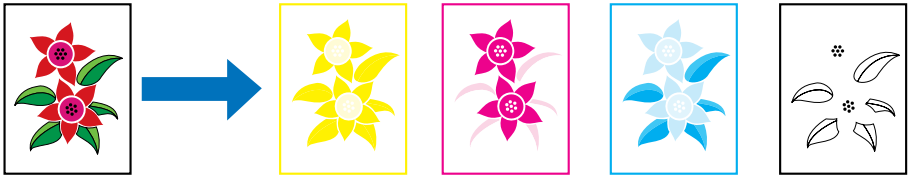

Y M C K

The data is reproduced separately on the light sensitive drum for each toner color, and the toner is transferred onto an intermediate transfer medium.

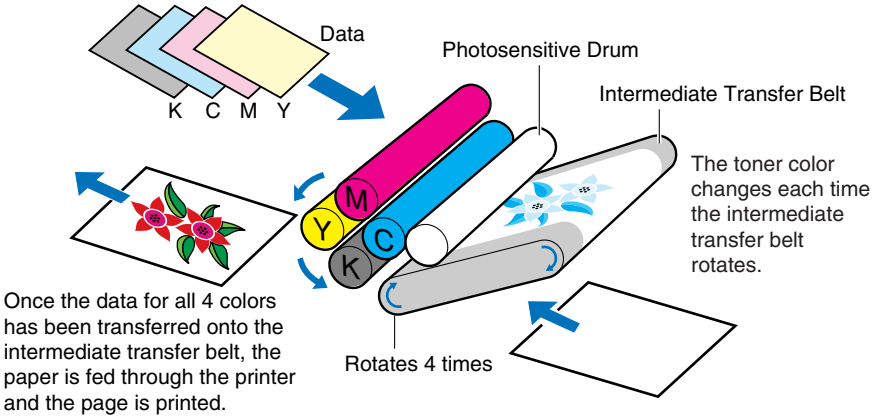

The data for all four colors is then transferred onto paper, and the paper passes through the fuser unit and is output.

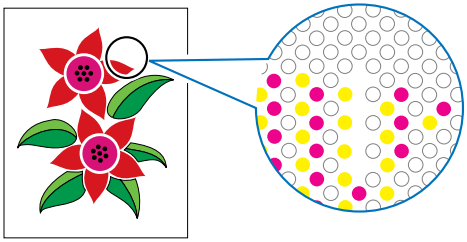

Achieving More Beautiful Color Printing

If the color in the print are not as expected, or the image quality is low, or the printout takes a long time, the printer performance is halved. By making minor adjustments and taking a little bit of care, we can make sure we get 100% out of the printer.

■ Adjusting the color on the display

Colors that you can see on the computer display are not limited to true colors. If we perform a color print based on the colors we can see on the computer display with the aim of matching those colors, the printed colors will be a little different.

Use the color samples or color adjustment tools that come with the application software to adjust the displayed colors to the colors that are actually printed.

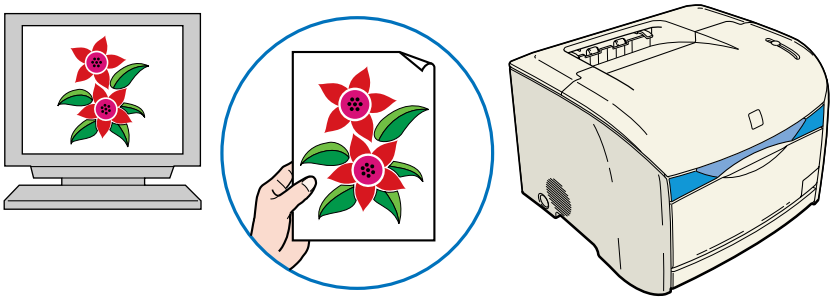

■ Adjusting the resolution

It doesn't matter how high the resolution of printing data is, you cannot get better picture quality than the resolution of the printer. A resolution of 600 dpi at printer sizes is sufficient. If the resolution of print data is too high, print processing will take a large amount of time, and the data size will also grow. Conversely, if the data resolution is too low, you cannot achieve sufficient image quality.

Check the dimensions and resolution of print data using an image processing application, and set the resolution to 300 dpi or 200 dpi.

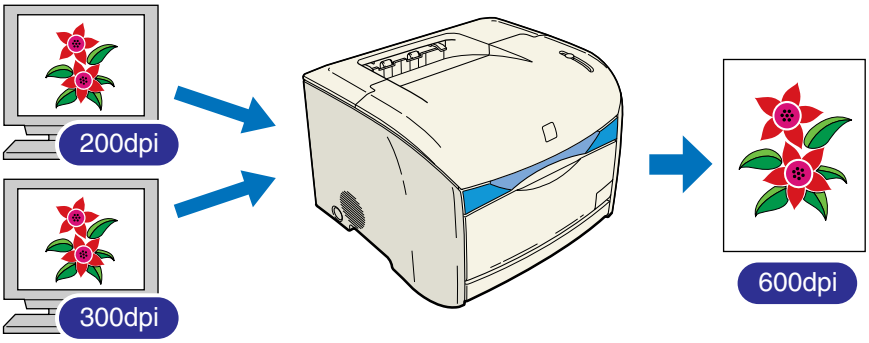

■ Selecting a print mode according to the document content

Reports and presentation material based on text and simple diagrams and black and white documents that do not use color do not need high image quality and can be printed using normal gradation. By changing to the mode for these documents, high-speed printing can be achieved. To print color photographs and complex illustrations clearly, data is printed with a high level of gradation. By categorizing modes based on the data, data can be printed more efficiently.

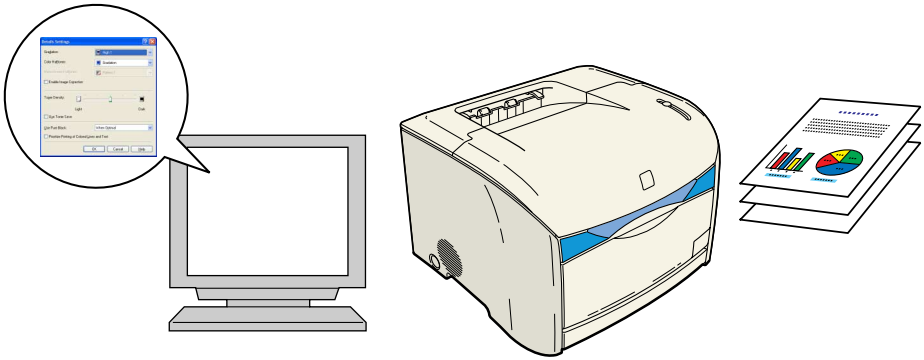

NOTE

For details on gradation, refer to "Specifying the Print Quality," on p. 4-56.

NetSpot Device Installer

The supplied CD-ROM includes the "NetSpot Device Installer", which is a utility that can initialize the settings of a printer connected to the network. The NetSpot Device Installer allows you to easily initialize the settings of printers connected to the network.

For detailed information on the NetSpot Device Installer, refer to the users manual included with the network board (AXIS 1611).

NOTE

Depending on the CD-ROM supplied, NetSpot Device Installer may not be included. If NetSpot Device Installer is not included on the supplied CD-ROM, you can download it from the Canon website.

NetSpot Console

NetSpot Console is a utility program for administrating printers that are connected to the network. NetSpot Console allows you to view a list of printers, display a printer map, modify detailed protocol settings, monitor printer states, perform job operations, and configure and view a variety of printer information using a web browser.

Refer to the "Netspot Console User's Guide" for details on NetSpot Console.

NOTE

You can download NetSpot Console and "NetSpot Console User's Guide" from the Canon website.

Windows Firewall

Windows Firewall is a feature of Windows XP Service Pack 2 and other operating systems that protects your computer by blocking unauthorized access over the network.

If your print server is installed with an operating system equipped with Windows Firewall, you need to configure Windows Firewall to unblock communication between the print server and client computers.

This section explains how to use the [CAPT Windows Firewall Utility] to configure Windows Firewall to unblock or block communication with client computers.

WARNING

If you want to copy the [CAPT Windows Firewall Utility] to your hard disk to run it, copy all of the files (CNAC3FW.EXE, CAPTRGFW.DLL, CNAC3FW.INI) from the [WF_UTIL] folder on the supplied "LBP5200 User Software" CD-ROM to your hard disk.

Configuring Windows Firewall to unblock communication with client computers

1 Insert the supplied "LBP5200 User Software" CD-ROM into the CD-ROM drive.

If CD-ROM Setup appears, click [Exit].

2 Select [My Computer] from the [Start] menu, then right-click on the CD-ROM icon and select [Open] from the popup menu.

3 Double-click [English], then [WF_UTIL], then [CNAC3FW.EXE].

The [CAPT Windows Firewall Utility] starts.

IMPORTANT

You can also start the utility by selecting [Run] from the [Start] menu, then entering "D:\English\WF_UTIL\CNAC3FW.EXE" and clicking [OK]. (In this case the CD-ROM drive is assumed to be assigned to "D:". The actual CD-ROM drive letter may be different depending on the computer you are using.)

4 Click [Unblock].

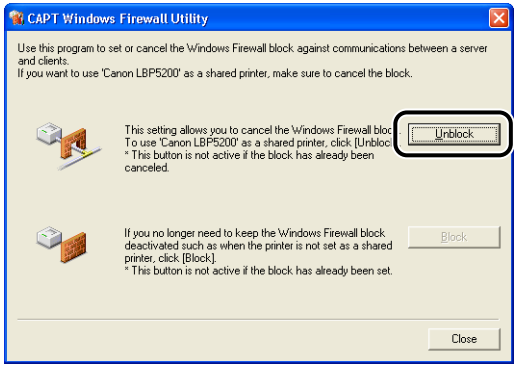

NOTE

You cannot click [Unblock] if the firewall is already configured to unblock communication with client computers.

5 Click [OK].

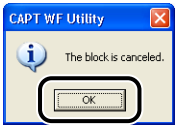

NOTE

To verify that the Windows Firewall block has been properly cleared, select [Control Panel] from the [Start] menu, then click [Network and Internet Connections] → [Windows Firewall].
Confirm that there is a checkmark next to [Canon LBP5200 RPC Server Process] on the [Exceptions] sheet in the [Windows Firewall] dialog box.

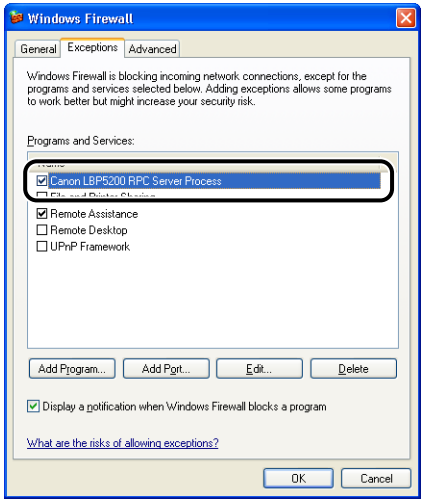

Windows Firewall is now configured to unblock communication with client computers.

Configuring Windows Firewall to block communication with client computers

1 **Insert the supplied "LBP5200 User Software" CD-ROM into the CD-ROM drive.**

If CD-ROM Setup appears, click [Exit].

2 **Select [My Computer] from the [Start] menu, then right-click on the CD-ROM icon and select [Open] from the popup menu.**

3 **Double-click [English], then [WF_UTIL], then [CNAC3FW.EXE].**

The [CAPT Windows Firewall Utility] starts.

IMPORTANT

You can also start the utility by selecting [Run...] from the [Start] menu, then entering "D:\English\WF_UTIL\CNAC3FW.EXE" and clicking [OK]. (In this case the CD-ROM drive is assumed to be assigned to "D:". The actual CD-ROM drive letter may be different depending on the computer you are using.)

4 Click [Block].

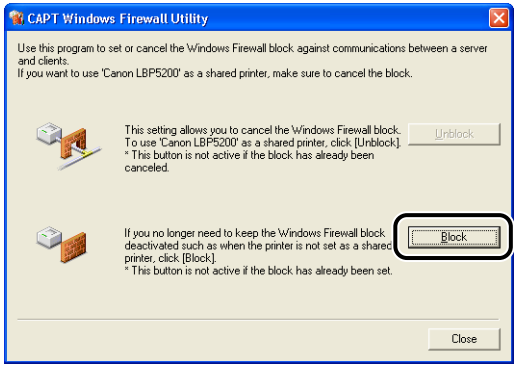

NOTE

You cannot click [Block] if the firewall is already configured to block communication with client computers.

5 Click [OK].

Windows Firewall is now configured to block communication with client computers.

Index

Numerics

250-sheet Paper Feeder
Installation, 6-5
Installation Space, 6-4
Package Contents, 6-5
Paper Feeder Unit PF-96, 6-2
Removing, 6-10

A

About Color Printing, 8-7
Add Printer Wizard
Windows 2000, 3-30
Windows 98/Me, 3-17
Windows XP/Server 2003, 3-45
Adjustment Grid, 4-59
Administrators Permission, 3-21, 3-26, 3-30, 3-37, 3-42
[Advanced] Sheet, 4-34
Alarm Lamp, 1-7, 7-3
Auto Detect, 4-58
Auxiliary Tray, 1-5
AXIS 1611, 6-3

B

Binding Location, 4-26
Black and White, 4-58
Borders, 4-50
Brightness, 4-59

C

Calibration, 5-30
Canceling a Print Job, 4-20
Canon Printer Uninstaller, 3-53
CAPT (Canon Advanced Printing Technology), 3-5
Cleaning
Fixing Roller, 5-33
Printer, 5-37
Client, 3-58, 3-70
[Color Adjustment] Sheet, 4-31
Color Halftones, 4-57
[Color Management] Sheet, 4-34
Color Mode, 4-30, 4-58
Color Settings, 4-30
Component Names, 1-4
Configuring the Print Server
Windows 2000/XP/Server 2003, 3-64
Windows 98/Me, 3-60
Continue Printing with the Multi-purpose Tray, 4-29
Contrast, 4-59
Copies, 4-24
Custom Paper Size, 4-25, 4-47

D

Date, 4-50
Details, 4-30
[Details] Sheet, 4-32
[Device Settings] Sheet, 4-35
Dimensions, 8-6
Document Properties
Windows 2000/XP/Server 2003, 4-15, 4-16, 4-22
Windows 98/Me, 4-11, 4-21
Download and Install, 3-58, 3-71
Drum Cartridge
Message, 5-17
Precautions for Handling, 5-27
Replacement, 5-17

Storage, 5-29
Drum Cartridge Slot, 1-6

E

Edit and Preview, 4-68
Edit Watermark, 4-25
Enable Image Correction, 4-57
Enhanced Saturation, 4-60
Envelopes, 2-4, 2-26
Expansion Slot, 1-5
Extension Tray, 1-5

F

Feet Positions, 6-4
Finishing, 4-27, 4-53
Finishing Details, 4-27
[Finishing] Sheet, 4-26
Firewall, 8-14
Fixing Roller, 5-33
Full Color, 4-58
Fuser Unit, 1-5

G

Gamma, 4-60
[General] Sheet, 4-32
Get Device Status, 4-36
Gradation, 4-57
Grips for Moving, 1-5
Gutter, 4-27, 4-52

H

Heavy Paper, 2-4

I

Important Safety Instructions, xv
Indicator Lights, 1-4
Installation
  Windows 2000, 3-21
  Windows 98/Me, 3-6
  Windows XP/Server 2003, 3-37
Installation Problems, 7-41

L

LAN Cable, 1-15
LAN Connector, 6-13
Laser Beam, xviii
Layout Options, 4-26
Loading Paper
  Envelopes, 2-26
  Multi-purpose Tray, 2-15
  Paper Cassette (250-sheet Paper Feeder), 2-34
  Transparency, 2-18
Local Printer, 3-18, 3-31, 3-47
Lock Release Levers, 1-5, 7-22

M

MAC Address Label, 6-13
Manual Color Settings, 4-30, 4-59
Manual Scaling, 4-24
Matching Method, 4-60
Matching Mode, 4-60
[Matching] Sheet, 4-31
Maximum Power Consumption, 8-3
Miscellaneous Problems, 7-49
Monitor Profile, 4-60
Monochrome Halftones, 4-57
Moving, 5-39
Multi-purpose Tray, 1-4

N

NetSpot Console, 8-13
NetSpot Device Installer, 8-12
Network Board

Component Names, 6-13
Installation, 6-14
Network Board (AXIS 1611), 6-3
Overview, 6-12
Package Contents, 6-13
Removal, 6-19
Network Environment, 1-15, 3-58

O

Objective, 4-29, 4-56
Online Help, 4-22
Optional Accessories, 6-2
Output Size, 4-23
Output Tray, 1-4, 2-12

P

Page Layout, 4-24
Page Order, 4-24
[Page Setup] Sheet, 4-23
Page Size, 4-23
PageComposer, 4-69
Paper
Printable Area, 2-6
Storage, 2-8
Storing Printouts, 2-8
Paper Guide, 2-36
Paper Guides, 1-5, 2-18
Paper Jams
Message, 7-4
Paper Jam Behind the Printer, 7-13
Paper Jam In the Drum Cartridge, 7-26
Paper Jam Inside the Printer, 7-6
Paper Lamp, 1-7
Paper Level Indicator, 2-39
Paper Limit Guide, 2-19
Paper Limit Mark, 2-37
Paper Output
Capacity, 2-13
Selection, 2-14
Type, 2-12
Paper Problems, 7-38
Paper Selection, 4-28, 4-55
Paper Size
Changing (Paper Cassette), 2-40
List, 2-2
Paper Source, 4-28
Capacity, 2-3
Selection, 2-10
Type, 2-9
Paper Source Optional Accessories, 4-2
Paper Source Options, 4-35
[Paper Source] Sheet, 4-28
Paper Type, 4-28
Paper Type List, 2-3
Pause When Printing the Multi-purpose Tray, 4-29
Peripheral Space Required, 6-4
Plain Paper, 2-4
Plug and Play
Windows 2000, 3-26
Windows 98/Me, 3-10
Windows XP/Server 2003, 3-42
[Ports] Sheet, 4-33
Poster Printing, 4-42
Power Lamp, 6-13
Power Socket, 1-5
Power Supply
Connecting the Power Cord, 1-8
Power Switch, 1-5
Turning the Printer OFF, 1-12
Turning the Printer ON, 1-11
Print Color Sample, 4-62
Print Quality Problems, 7-30
Print Server, 3-59
Printer
Cleaning, 5-37
Component Names, 1-4
Moving, 5-39
Precautions for Handling, 5-46
Storage, 5-47
Printer Connector, 6-13
Printer Driver
Installation, 3-5
Uninstallation, 3-81
Printer Name, 3-16, 3-20, 3-34, 3-50
Printer Properties
Windows 2000/XP/Server 2003, 4-18, 4-22

Windows 98/Me, 4-13, 4-21
Printer Sharing Settings
Windows 2000/XP/Server 2003, 3-65
Windows 98/Me, 3-62
Printer Status Window
Consumables/Counters, 4-78
Displaying, 4-74
Parts and Functions, 4-72
Preferences, 4-75
Refresh, 4-78
Register Paper Size, 4-77
Utility, 4-78
Printing, 4-5
Printing Orientation, 4-24
Printing Preferences, 4-10
Prioritize Printing of Colored Lines and Text, 4-57
Problems
Installation, 7-41
Other, 7-49
Paper, 7-38
Print Quality, 7-30
When Nothing is Printed, 7-40
Profile
Add, 4-37
Allow Profile Selection, 4-38
Allow Setting Edition, 4-38
Comment, 4-36
Delete, 4-37
Edit, 4-37
Export, 4-38
Import, 4-37
Name, 4-36
Profile List, 4-36
Working with Profiles, 4-64
[Profile] Sheet, 4-36

Q

Quality, 4-56
[Quality] Sheet, 4-29

R

Ready Lamp, 1-7

S

Scaling, 4-40
[Security] Sheet, 4-35
Self-Diagnostic Test, 1-11
Serial Number, 8-23
Serial Number Label, 1-6
Service Call Display, 7-28
Shared Printer, 3-58
[Sharing] Sheet, 4-33
Show Icon in the Taskbar, 4-36
Single-page Batch Processing, 4-60
Specifications
Hardware, 8-2
Software, 8-5
Spooling at Host, 4-35
Status Lamp, 6-13
Sub-Output Tray, 1-5, 2-12
System, 3-3
System Requirements, 3-3

T

Test Page, 3-55
Toner Cartridge
Message, 5-2
Precautions for Handling, 5-13
Replacement, 5-2
Storage, 5-15
Toner Cartridge Holder, 5-6
Toner Cartridge Slot, 1-6
Toner Density, 4-57
Toner Lamp, 1-6
Toner Replacement Key, 1-4, 1-6
Top Cover, 1-4
Transparency, 2-4
Troubleshooting Map, 7-2

U

Uninstallation, 3-81
Unusable Paper, 2-7
Usable Paper, 2-2
USB
  Cable, 1-13
  Class Driver, 3-9, 3-13, 3-25, 3-41
  Socket, 1-5
Use CanoFine, 4-60
Use Pure Black, 4-57
Use Toner Save, 4-30, 4-57

V

Ventilation Slots (Air Intake), 1-5
Ventilation Slots (Exhaust), 1-5

W

Watermark, 4-25, 4-43
When Nothing is Printed, 7-40
Windows Firewall, 8-14

Location of the Serial Number

The serial number consists of four alphabetic characters and six numeric digits.

IMPORTANT

The labels are required for a service engineer to check the serial number for service or maintenance. Do not peel off the serial numbers.

■ Inside the front cover

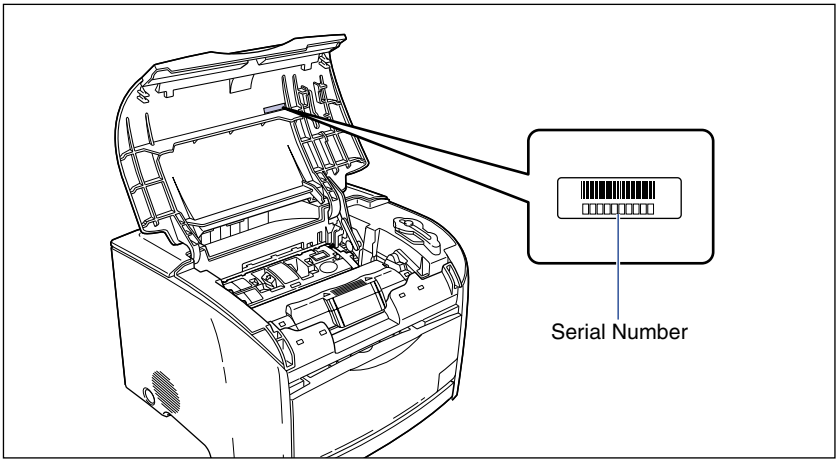

■ Packaging box (on the side)

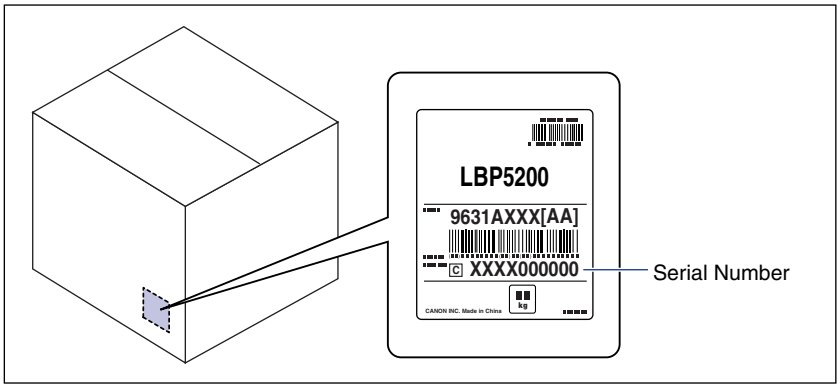

Canon

R-IE-664AB

© CANON INC. 2005