Canon

# LBP5100 CAPT

Canon Advanced Printing Technology

# User's Guide

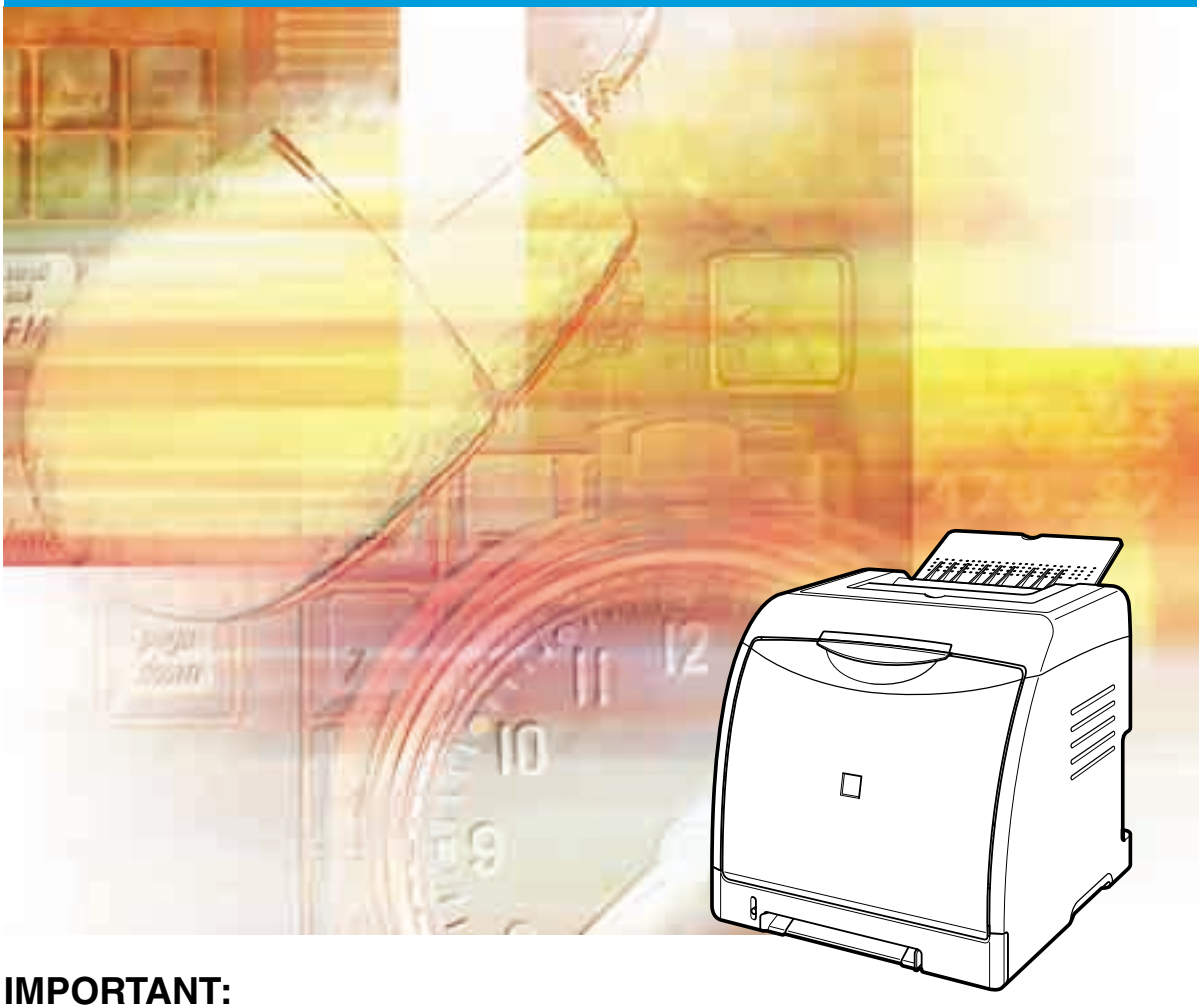

**IMPORTANT:**

Read this manual carefully before using your printer.
Save this manual for future reference.

ENG

# LBP5100
# Laser Printer
# User's Guide

# Manuals for the Printer

The manuals for this printer are arranged as follows. Please refer to them for detailed information.

Guides with this symbol are PDF manuals included on the accompanying CD-ROM.

- **Installation**
- **Basic Operations**
- **Troubleshooting**

**User's Guide (This Manual)**

- **Setting Up the Network Environment for Printing**
- **Managing the Printer in the Network Environment**

Only when the optional network board is installed
(This manual is also included in the CD-ROM supplied with the optional network board.)

**Network Guide**

- **Operating/Setting the Printer from the Web Browser**

Only when the optional network board is installed
(This manual is also included in the CD-ROM supplied with the optional network board.)

**Remote UI Guide**

To view the manual in PDF format, Adobe Reader/Adobe Acrobat Reader is required. If Adobe Reader/Adobe Acrobat Reader is not installed on your system, please download it from the Adobe Systems Incorporated website.

# How This Manual Is Organized


Chapter 1 Before You Start

Chapter 2 Installing the Printer

Chapter 3 Loading and Outputting Paper

Chapter 4 Setting Up the Printing Environment

Chapter 5 Printing a Document

Chapter 6 Routine Maintenance

Chapter 7 Troubleshooting

Chapter 8 Installing the Optional Accessories

Chapter 9 Appendix



Considerable effort has been made to ensure that this manual is free of inaccuracies and omissions. However, as we are constantly improving our products, if you need an exact specification, please contact Canon.

# Contents

**Preface** . . . . . **ix**
**How To Use This Manual** . . . . . **ix**
Symbols Used in This Manual . . . . . ix
Buttons Used in This Manual . . . . . ix
Displays Used in This Manual . . . . . x
Illustrations Used in This Manual . . . . . x
Abbreviations Used in This Manual . . . . . xi
**Legal Notices** . . . . . **xii**
Product Name . . . . . xii
FCC (Federal Communications Commission) . . . . . xii
EMC Directive (220 - 240 V model) . . . . . xiii
Laser Safety . . . . . xiii
International Energy Star-Program . . . . . xiv
WEEE Directive . . . . . xv
Trademarks. . . . . xv
Copyright . . . . . xvi
Disclaimers. . . . . xvi
Legal Limitations on the Usage of Your Product and the Use of Images . . . . xvii
**Important Safety Instructions** . . . . . **xviii**
Installation . . . . . xviii
Power Supply . . . . . xx
Handling . . . . . xxi
Maintenance and Inspections . . . . . xxii
Consumables . . . . . xxiv

## Chapter 1 Before You Start

**Features and Benefits** . . . . . **1-2**
**CD-ROM** . . . . . **1-4**
CD-ROM Setup . . . . . 1-5
**Parts and Their Functions** . . . . . **1-7**
Printer Unit . . . . . 1-7
Front View . . . . . 1-7
Rear View . . . . . 1-8
Inner View . . . . . 1-9
Indicators . . . . . 1-10
**Optional Accessories** . . . . . **1-11**
Paper Feeder . . . . . 1-11
Network Board . . . . . 1-12

## Chapter 2 Installing the Printer


**Installation Procedure . . . . . 2-2**

**Installation Site . . . . . 2-3**

Installation Environment . . . . . 2-3

Temperature/Humidity Conditions . . . . . 2-3

Power Supply Requirements . . . . . 2-4

Installation Requirements . . . . . 2-4

Installation Space . . . . . 2-5

Required Peripheral Space . . . . . 2-5

Foot Positions . . . . . 2-6

**Confirming the Package Contents . . . . . 2-8**

**Carrying the Printer to the Installation Site and Removing the Packing Materials on the Outside of the Printer . . . . . 2-9**

**Removing the Packing Materials inside the Printer and Installing the Toner Cartridges . . . . . 2-13**

**Removing the Packing Material in the Paper Cassette and Loading Paper . . . . 2-24**

**Connecting the Power Cord . . . . . 2-29**

**Connecting to a Computer . . . . . 2-31**

Using a USB Cable . . . . . 2-31

Using a LAN Cable . . . . . 2-33

**Setting Up the Printing Environment . . . . . 2-35**

**Turning the Printer ON/OFF . . . . . 2-36**

Turning the Printer ON . . . . . 2-36

Turning the Printer OFF . . . . . 2-37

Power Saving (Sleep Mode) . . . . . 2-38


## Chapter 3 Loading and Outputting Paper


**Paper Requirements . . . . . 3-2**

Usable Paper . . . . . 3-2

Paper Size . . . . . 3-2

Paper Type . . . . . 3-3

Abbreviations of Paper Sizes . . . . . 3-6

Printable Area . . . . . 3-6

Unusable Paper . . . . . 3-7

Storing Paper . . . . . 3-8

Storing Printouts . . . . . 3-9

**Paper Source . . . . . 3-10**

Paper Source Type . . . . . 3-10

Paper Capacity of Paper Source . . . . . 3-11

Selecting a Paper Source . . . . . 3-12

Precautions for Handling the Manual Feed Slot or Paper Cassette . . . . . 3-13

**Output Tray . . . . . 3-15**

Output Tray . . . . . 3-15
Paper Capacity of the Output Tray . . . . . 3-16
**Loading Plain Paper, Heavy Paper, Transparencies, or Labels in the Paper Source . . . . . 3-17**
Loading Paper in the Paper Cassette. . . . . 3-17
Loading Paper in the Manual Feed Slot . . . . . 3-26
**Loading Index Card Size Media in the Paper Source . . . . . 3-29**
Loading Index Card Size Media in the Paper Cassette . . . . . 3-29
Loading Index Card Size Media in the Manual Feed Slot . . . . . 3-37
**Loading Envelopes in the Paper Source . . . . . 3-40**
Loading Envelopes in the Paper Cassette . . . . . 3-40
Loading an Envelope in the Manual Feed Slot. . . . . 3-48
**Loading Custom Size Paper (Non-Standard Paper) or Paper at a Size of Statement, Foolscap, or 16K in the Paper Source . . . 3-51**
Loading Custom Size Paper or Paper at a Size of Statement, Foolscap, or 16K in the Paper Cassette . . . . . 3-52
Loading Custom Size Paper or Paper at a Size of Statement, Foolscap, or 16K in the Manual Feed Slot . . . . . 3-60
Registering a Custom Paper Size (Non-Standard Paper) . . . . . 3-62
**Setting Up the Printer Driver and Printing. . . . . 3-65**
**2-sided Printing . . . . . 3-72**

## Chapter 4 Setting Up the Printing Environment

**Introduction . . . . . 4-2**
After Installing the Printer. . . . . 4-2
Tasks to Perform Each Time You Print . . . . . 4-2
System Requirements . . . . . 4-2
**Installing the CAPT Software . . . . . 4-4**
Installing from CD-ROM . . . . . 4-5
Installing with Plug and Play. . . . . 4-13
For Windows XP/Server 2003 . . . . . 4-13
For Windows 2000 . . . . . 4-18
For Windows 98/Me . . . . . 4-23
Installing from [Add Printer Wizard] . . . . . 4-32
For Windows XP/Server 2003 . . . . . 4-32
For Windows 2000 . . . . . 4-39
For Windows 98/Me . . . . . 4-45
**After Completing Installation . . . . . 4-50**
For Windows XP/Server 2003 . . . . . 4-50
For Windows 98/Me/2000. . . . . 4-51
**Checking the Operations by Configuration Page Print . . . . . 4-52**
**Printing from a Network Computer by Sharing the Printer on a Network . . . . 4-55**
Print Server Settings . . . . . 4-56
Installation on Clients . . . . . 4-63

Installing from CD-ROM Setup . . . . . 4-64
Installing from [Add Printer Wizard] . . . . . 4-71
Installing from [Windows Explorer] . . . . . 4-74
**Uninstalling the CAPT Software . . . . . 4-76**

## Chapter 5 Printing a Document

**Setting Printer Information before Printing . . . . . 5-3**
**Printing from an Application . . . . . 5-5**
**Specifying the Printing Preferences . . . . . 5-9**
For Windows 2000/XP/Server 2003 . . . . . 5-9
Displaying the [Document Properties] Dialog Box from an Application . . 5-9
Displaying the [Document Properties] Dialog Box from the [Printers and Faxes] Folder or the [Printers] Folder . . . . . 5-11
Displaying the [Printer Properties] Dialog Box from the [Printers and Faxes] Folder or the [Printers] Folder . . . . . 5-12
For Windows 98/Me . . . . . 5-13
Displaying the [Document Properties] Dialog Box from an Application . . . . 5-13
Displaying the [Printer Properties] Dialog Box from the [Printers] Folder . . . 5-15
**Deleting/Pausing/Resuming a Print Job . . . . . 5-16**
**Using the Various Printing Functions . . . . . 5-18**
Utilizing a Variety of Options for Printing . . . . . 5-18
Various Pages in the Printer Driver . . . . . 5-25
[Page Setup] Sheet . . . . . 5-26
[Finishing] Sheet . . . . . 5-31
[Paper Source] Sheet . . . . . 5-36
[Quality] Sheet . . . . . 5-37
[Configuration]/[Device Settings] Sheet . . . . . 5-42
[Profile] Sheet (Windows 2000/XP/Server 2003 only) . . . . . 5-43
Preview . . . . . 5-46
Printing Multiple Pages on One Sheet . . . . . 5-48
Scaling Print Output . . . . . 5-50
Scaling a Document Automatically . . . . . 5-50
Scaling a Document Manually . . . . . 5-51
Poster Printing . . . . . 5-52
Watermark Printing . . . . . 5-53
Watermark Printing . . . . . 5-53
Editing Watermarks . . . . . 5-54
Printing Borders and Printing Date . . . . . 5-55
Selecting a Print Style . . . . . 5-57
Printing with a Gutter . . . . . 5-59
Specifying the Paper Output Method . . . . . 5-60
Printing with Upper Left of Sheet as Starting Point . . . . . 5-61
Printing with the Data 180 Degrees Rotated . . . . . 5-63
Smoothing Out Rough-Textured Images . . . . . 5-64

Printing with Toner Density Adjusted . . . . . 5-66
Color Settings. . . . . 5-67
Specifying the Brightness and Contrast . . . . . 5-69
Printing a Color Sample (Windows 2000/XP/Server 2003 only) . . . . . 5-71
Specifying "Profiles" . . . . . 5-72
Adding a "Profile" . . . . . 5-73
Editing/Deleting a Profile . . . . . 5-75
Editing Jobs with PageComposer . . . . . 5-76
**How to Use Online Help . . . . . 5-79**
Displaying Online Help on the Options Displayed on the Screen. . . . . 5-79
Displaying Online Help on the Operation Procedures . . . . . 5-80
Retrieving the Option about Which You Want to Know with Keywords and Displaying its Online Help . . . . . 5-82
**Manuals. . . . . 5-85**
Installing the Manuals. . . . . 5-85
Uninstalling the Manuals . . . . . 5-88
**Printer Status Window . . . . . 5-89**
Functions on the Printer Status Window . . . . . 5-90
Displaying the Printer Status Window . . . . . 5-92
[Preferences] Menu . . . . . 5-94
[Consumables/Counters] Menu . . . . . 5-95
[Utility] Menu. . . . . 5-96
[Device Settings] Menu . . . . . 5-96
[Refresh]. . . . . 5-97
[Resolve Error] . . . . . 5-97
Displaying Printer Status When Using a Print Server . . . . . 5-98

## Chapter 6 Routine Maintenance

**Replacing Toner Cartridges . . . . . 6-2**
When a Message Appears. . . . . 6-2
Replacing Toner Cartridges . . . . . 6-4
Precautions for Handling Toner Cartridges . . . . . 6-13
Storing Toner Cartridges . . . . . 6-15
**Calibrating the Printer . . . . . 6-16**
Performing Calibration Manually . . . . . 6-16
Performing Calibration Automatically at the Designated Time . . . . . 6-17
Performing Calibration Automatically . . . . . 6-19
Specifying Whether Calibration Should Be Prioritized . . . . . 6-20
**Cleaning the Fixing Roller. . . . . 6-22**
**Cleaning the Static Charge Eliminator. . . . . 6-24**
**Cleaning the Outside of the Printer . . . . . 6-26**
**Moving the Printer . . . . . 6-29**
**Handling the Printer. . . . . 6-38**

## Chapter 7 Troubleshooting

**Troubleshooting Map . . . . . 7-2**
**Paper Jams . . . . . 7-3**
Paper Jam Area . . . . . 7-6
Procedure for Clearing Paper Jams . . . . . 7-7
**The Alarm Indicator is On/Blinking . . . . . 7-20**
The Alarm Indicator is On (a Service Error Appears) . . . . . 7-21
The Alarm Indicator is Blinking . . . . . 7-24
**Print Quality Problems . . . . . 7-25**
**Paper Problems . . . . . 7-37**
**Installation Problems . . . . . 7-39**
Problems on Local Installation . . . . . 7-40
Installation Problems When the Printer is Shared on a Network . . . . . 7-41
Printing a Test Page . . . . . 7-42
When Uninstallation Fails. . . . . 7-43
Uninstalling the USB Class Driver . . . . . 7-46
**When Data is Not Sent to the Printer . . . . . 7-50**
When the Printer and Computer are Connected by a USB Cable . . . . . 7-50
When the Printer is Shared on a Network . . . . . 7-52
**Miscellaneous Problems . . . . . 7-54**
**Confirming the Printer Features . . . . . 7-56**

## Chapter 8 Installing the Optional Accessories

**Paper Feeder . . . . . 8-2**
Moving the Printer . . . . . 8-3
Removing the Packing Materials and Installing the Paper Feeder. . . . . 8-8
Removing the Paper Feeder . . . . . 8-15
**Network Board . . . . . 8-18**
Parts and Their Functions . . . . . 8-20
Installing the Network Board . . . . . 8-21
Setting the Network Board . . . . . 8-25
Resetting the Network Board . . . . . 8-28
Removing the Network Board . . . . . 8-31

## Chapter 9 Appendix

**Specifications . . . . . 9-2**
Hardware Specifications . . . . . 9-2
Software Specifications . . . . . 9-4
**Dimensions of Each Part . . . . . 9-5**
**About Color Printing . . . . . 9-7**
The Three Primary Colors of Light and Color . . . . . 9-7

Method for Expressing Color . . . . . 9-8
About Color Printing . . . . . 9-9
Achieving More Beautiful Color Printing . . . . . 9-10
**NetSpot Device Installer . . . . . 9-12**
**Print Monitor Installer . . . . . 9-13**
**Windows Firewall . . . . . 9-14**
Configuring Windows Firewall to Unblock Communication with the Client Computers . . . . . 9-15
Configuring Windows Firewall to Block Communication with the Client Computers . . . . . 9-17
Configuring Windows Firewall to Unblock Communication with the Print Server . . . . . 9-19
**Index . . . . . 9-20**
**Location of the Serial Number . . . . . 9-25**

# Preface

Thank you for purchasing the Canon LBP5100.
Please read this manual thoroughly before operating the printer in order to familiarize yourself with its capabilities, and to make the most of its many functions.
After reading this manual, store it in a safe place for future reference.

## How To Use This Manual

### Symbols Used in This Manual

The following symbols are used in this manual to explain procedures, restrictions, handling precautions, and instructions that should be observed for safety.

| | |
|---|---|
| **WARNING** | Indicates a warning concerning operations that may lead to death or injury to persons if not performed correctly. In order to use the printer safely, always pay attention to these warnings. |
| **CAUTION** | Indicates a caution concerning operations that may lead to injury to persons, or damage to property if not performed correctly. In order to use the printer safely, always pay attention to these cautions. |
| IMPORTANT | Indicates operational requirements and restrictions. Be sure to read these items carefully in order to operate the printer correctly, and to avoid damage to the printer. |
| NOTE | Indicates a clarification of an operation, or contains additional explanations for a procedure. Reading these notes is highly recommended. |

### Buttons Used in This Manual

The following button names are a few examples of how buttons to be pressed are expressed in this manual:

- Buttons on Computer Operation Screen: [Button Name]

  Example: [OK]
  [Details]

# Displays Used in This Manual

Displays used in this manual may differ from those on your computer depending on the system environment.

The buttons which you should press are marked with a ⬭ as shown below.

When multiple buttons can be pressed on the screen shot of computer operation screen, all buttons are marked. Select the button which suits your needs.

**10** **Click [Next].**

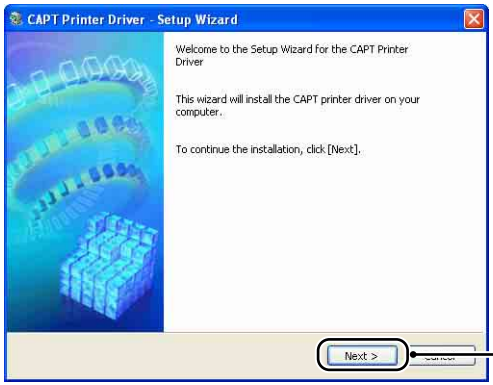


Click this button for operation.

# Illustrations Used in This Manual

- Although the names of the indicator and key are not indicated in the illustrations of the control panel used in this manual, the names are indicated above the respective icons depending on the country or region.

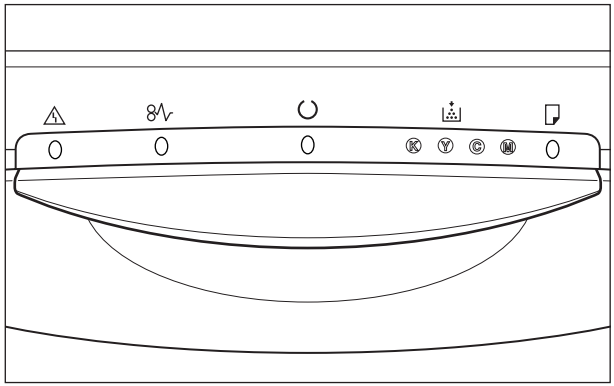

# Abbreviations Used in This Manual

In this manual, product names and model names are abbreviated as follows:

| | |
|---|---|
| Microsoft® Windows® 95 operating system: | Windows 95 |
| Microsoft® Windows® 98 operating system: | Windows 98 |
| Microsoft® Windows® Millennium Edition operating system: | Windows Me |
| Microsoft® Windows® 2000 operating system: | Windows 2000 |
| Microsoft® Windows® XP operating system: | Windows XP |
| Microsoft® Windows Server™ 2003 operating system: | Windows Server 2003 |
| Microsoft® Windows® operating system: | Windows |

# Legal Notices

## Product Name

Safety regulations require the product's name to be registered.

In some regions where this product is sold, the following name(s) in ( ) may be registered instead.

LBP5100 (F151200)

## FCC (Federal Communications Commission)

This device complies with part 15 of the FCC Rules. Operation is subject to the following two conditions: (1) This device may not cause harmful interference, and (2) this device must accept any interference received, including interference that may cause undesired operation.
This equipment has been tested and found to comply with the limits for a class B digital device, pursuant to Part 15 of the FCC rules. These limits are designed to provide reasonable protection against harmful interference in a residential installation. This equipment generates, uses and can radiate radio frequency energy and if not installed and used in accordance with the instructions, may cause harmful interference to radio communications. However, there is no guarantee that interference will not occur in a particular installation.

If this equipment does cause harmful interference to radio or television reception, which can be determined by turning the equipment off and on, the user is encouraged to try to correct the interference by one or more of the following measures:

- Reorient or relocate the receiving antenna.
- Increase the separation between the equipment and receiver.
- Connect the equipment into an outlet on a circuit different from that to which the receiver is connected.
- Consult the dealer or an experienced radio/TV technician for help.

Use of shielded cable is required to comply with class B limits in Subpart B of Part 15 of FCC Rules.

Do not make any changes or modifications to the equipment unless otherwise specified in the manual. If such changes or modifications should be made, you could be required to stop operation of the equipment.

Canon U.S.A. Inc.
One Canon Plaza, Lake Success, NY 11042, U.S.A.
Tel No. (516) 328-5600

## EMC Directive (220 - 240 V model)

"This equipment has been tested in a typical system to comply with the technical requirements of EMC Directive."

- Use of shielded cable is necessary to comply with the technical requirements of EMC Directive.

The product is in conformity with the EMC directive at nominal mains input 230 V, 50 Hz although the rated input of the product is 220 - 240 V, 50/60 Hz.

C-tick marking on the rating label means that we declare the product is in conformity with the relevant requirements at nominal mains input 230 V, 50 Hz although the rated input of the product is 220 - 240 V, 50/60 Hz.

## Laser Safety

This product complies with 21 CFR Chapter 1 Subchapter J as a Class I laser product under the U.S. Department of Health and Human Services (DHHS) Radiation Performance Standard according to the Radiation Control for Health and Safety Act of 1968. Also, this product is certified as a Class 1 laser product under IEC60825-1:1993 and EN60825-1:1994. This means that the product does not produce hazardous laser radiation.

Since radiation emitted inside the product is completely confined within protective housings and external covers, the laser beam cannot escape from the machine during any phase of user operation. Do not remove protective housings or external covers, except as directed by the equipment's manuals.

The label shown below is attached to the laser scanner unit inside the machine.

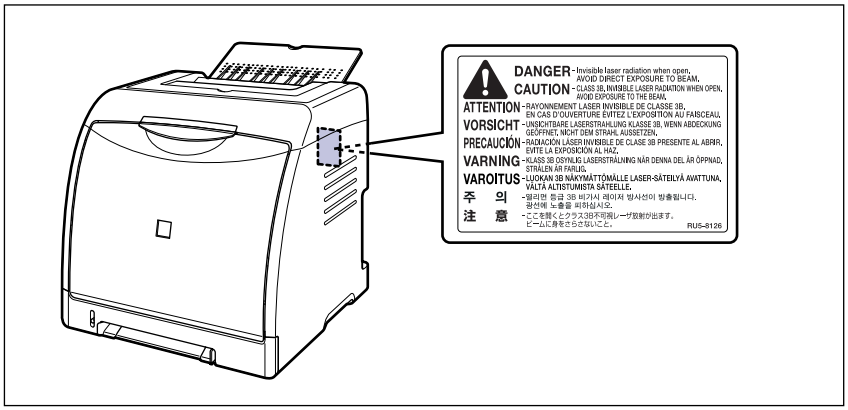


CLASS 1 LASER PRODUCT
LASER KLASSE 1
APPAREIL A RAYONNEMENT LASER DE CLASSE 1
APPARECCHIO LASER DI CLASSE 1
PRODUCTO LASER DE CLASE 1
APARELHO A LASER DE CLASSE 1

**CAUTION**

**Use of controls, adjustments, or performance of procedures other than those specified in this manual may result in hazardous radiation exposure.**

## International Energy Star-Program

As an ENERGY STAR Partner, Canon Inc. has determined that this product meets the ENERGY STAR Program for energy efficiency.

The International ENERGY STAR Office Equipment Program is an international program that promotes energy saving through the use of computers and other office equipment.

The program backs the development and dissemination of products with functions that effectively reduce energy consumption. It is an open system in which business proprietors can participate voluntarily.

The targeted products are office equipment, such as computers, displays, printers, facsimiles, and copiers. The standards and logos are uniform among participating nations.

## WEEE Directive

European Union (and EEA) only.

This symbol indicates that this product is not to be disposed of with your household waste, according to the WEEE Directive (2002/96/EC) and your national law. This product should be handed over to a designated collection point, e.g., on an authorized one-for-one basis when you buy a new similar product or to an authorized collection site for recycling waste electrical and electronic equipment (EEE). Improper handling of this type of waste could have a possible negative impact on the environment and human health due to potentially hazardous substances that are generally associated with EEE. At the same time, your cooperation in the correct disposal of this product will contribute to the effective usage of natural resources. For more information about where you can drop off your waste equipment for recycling, please contact your local city office, waste authority, approved WEEE scheme or your household waste disposal service. For more information regarding return and recycling of WEEE products, please visit www.canon-europe.com/environment.

(EEA: Norway, Iceland and Liechtenstein)

## Trademarks

Canon, the Canon Logo, LBP, NetSpot, and PageComposer are trademarks of Canon Inc.

Adobe, Adobe Acrobat, and Adobe Reader are trademarks of Adobe Systems Incorporated.

Apple and TrueType are trademarks of Apple Computer, Inc.

IBM is a trademark of International Business Machines Corporation.

Microsoft and Windows are registered trademarks of Microsoft Corporation in the United States and other countries.

Windows Server is a trademark of Microsoft Corporation.

Ethernet is a trademark of Xerox Corporation.

Other product and company names herein may be the trademarks of their respective owners.

# Copyright

Copyright 2006 by Canon Inc. All rights reserved.

No part of this publication may be reproduced or transmitted in any form or by any means, electronic or mechanical, including photocopying and recording, or by any information storage or retrieval system without the prior written permission of Canon Inc.

# Disclaimers

The information in this manual is subject to change without notice.

CANON INC. MAKES NO WARRANTY OF ANY KIND WITH REGARD TO THIS MATERIAL, EITHER EXPRESS OR IMPLIED, EXCEPT AS PROVIDED HEREIN, INCLUDING WITHOUT LIMITATION, THEREOF, WARRANTIES AS TO MARKETABILITY, MERCHANTABILITY, FITNESS FOR A PARTICULAR PURPOSE OF USE OR AGAINST INFRINGEMENT OF ANY PATENT. CANON INC. SHALL NOT BE LIABLE FOR ANY DIRECT, INCIDENTAL, OR CONSEQUENTIAL DAMAGES OF ANY NATURE, OR LOSSES OR EXPENSES RESULTING FROM THE USE OF THIS MATERIAL.

# Legal Limitations on the Usage of Your Product and the Use of Images

Using your product to scan, print or otherwise reproduce certain documents, and the use of such images as scanned, printed or otherwise reproduced by your product, may be prohibited by law and may result in criminal and/or civil liability. A non-exhaustive list of these documents is set forth below. This list is intended to be a guide only. If you are uncertain about the legality of using your product to scan, print or otherwise reproduce any particular document, and/or of the use of the images scanned, printed or otherwise reproduced, you should consult in advance with your legal advisor for guidance.

- Paper Money
- Money Orders
- Certificates of Deposit
- Postage Stamps (canceled or uncanceled)
- Identifying Badges or Insignias
- Selective Service or Draft Papers
- Checks or Drafts Issued by Governmental Agencies
- Motor Vehicle Licenses and Certificates of Title
- Travelers Checks
- Food Stamps
- Passports
- Immigration Papers
- Internal Revenue Stamps (canceled or uncanceled)
- Bonds or Other Certificates of Indebtedness
- Stock Certificates
- Copyrighted Works/Works of Art without Permission of Copyright Owner

# Important Safety Instructions

Please read these "Important Safety Instructions" thoroughly before operating the printer. As these instructions are intended to prevent injury to the user or other persons or destruction of property, always pay attention to these instructions. Also, since it may result in unexpected accidents or injuries, do not perform any operation unless otherwise specified in the manual. Improper operation or use of this machine could result in personal injury and/or damage requiring extensive repair that may not be covered under your Limited Warranty.

## Installation

**WARNING**

- **Do not install the printer near alcohol, paint thinner, or other flammable substances. If flammable substances come into contact with electrical parts inside the printer, it may result in a fire or electrical shock.**
- **Do not place the following items on the printer. If these items come into contact with a high-voltage area inside the printer, it may result in a fire or electrical shock.**
  **If these items are dropped or slipped inside the printer, immediately turn OFF the power switch ① and disconnect the USB cable if it is connected ②. Then, unplug the power plug from the AC power outlet ③ and contact your local authorized Canon dealer.**
  **- Necklaces and other metal objects**

- Cups, vases, flowerpots, and other containers filled with water or liquids

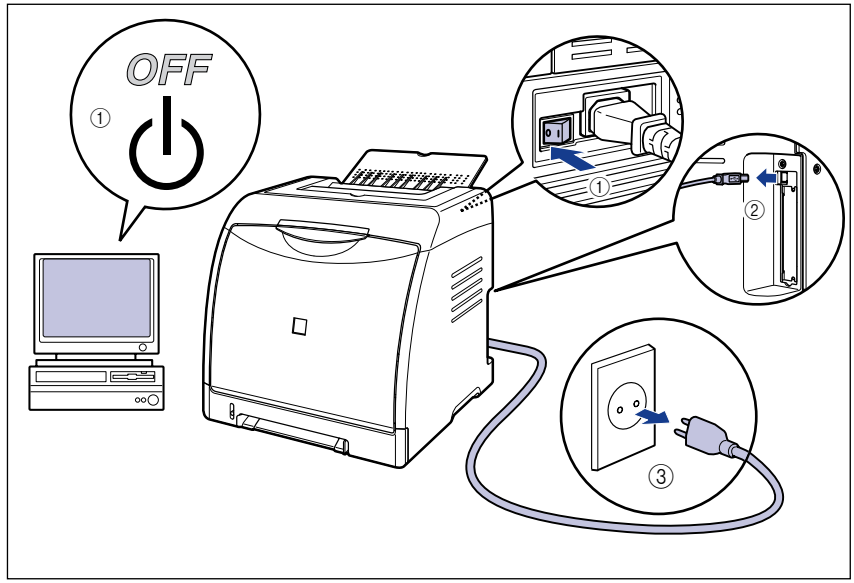


**CAUTION**

- Do not install the printer in unstable locations, such as unsteady platforms or inclined floors, or in locations subject to excessive vibrations, as this may cause the printer to fall or tip over, resulting in personal injury.
- Never block the ventilation slots on the printer. The ventilation slots are provided for proper ventilation of working parts inside the printer. Never place the printer on a soft surface, such as a sofa or rug. Blocking the ventilation slots can cause the printer to overheat, resulting in a fire.
- Do not install the printer in the following locations, as this may result in a fire or electrical shock:
  - A damp or dusty location
  - A location exposed to smoke and steam such as cookeries and humidifiers
  - A location exposed to rain or snow
  - A location near water faucets or water
  - A location exposed to direct sunlight
  - A location subject to high temperatures
  - A location near open flames
- When installing the printer, gently lower the printer onto the floor or other machine to avoid catching your hands, as this may result in personal injury.
- When connecting the interface cable, connect it properly following the instructions in this manual. If not connected properly, this may result in malfunction or electrical shock.
- When moving the printer, follow the instructions in this manual to hold it correctly. Failure to do so may cause you to drop the printer, resulting in personal injury. (See "Moving the Printer," on p. 6-29)

# Power Supply

**WARNING**

- Do not damage or modify the power cord. Also, do not place heavy objects on the power cord, or pull on or excessively bend it, as this could cause electrical damage and result in a fire or electrical shock.
- Keep the power cord away from a heat source; failure to do this may cause the power cord coating to melt, resulting in a fire or electrical shock.
- Do not plug or unplug the power plug with wet hands, as this may result in electrical shock.
- Do not plug the power cord to a multiplug power strip, as this may cause a fire or electrical shock.
- Do not bundle up or tie the power cord in a knot, as this may result in a fire or electrical shock.
- Insert the power plug completely into the AC power outlet, as failure to do so may result in a fire or electrical shock.
- Do not use power cords other than the power cord provided, as this may result in a fire or electrical shock.
- As a general rule, do not use extension cords or plug extension cords to a multiple power strip. If extension cords must be used or plugged to a multiple power strip, however, use them observing the following points on user's own authority. If you use extension cords improperly, this may result in a fire or electrical shock.
  - Do not connect one extension cord to another.
  - Make sure that the voltage of the power plug is the one indicated in the rating label (attached on the back of the printer) when you use the printer.
  - Use an extension cord that allows the current value greater than the necessary one indicated in the rating label (attached on the back of the printer).
  - When you use an extension cord, untie the cord binding, and insert the power plug completely into the extension cord outlet to ensure a firm connection between the power cord and the extension cord.
  - Periodically check that the extension cord is not overheated.

**CAUTION**

- Do not use power supplies with voltages other than those specified herein, as this may result in a fire or electrical shock.
- Always grasp the plug when unplugging the power cord. Pulling on the power cord may expose or snap the core wire, or otherwise damage the power cord. If the power cord is damaged, this could cause current to leak, resulting in a fire or electrical shock.
- Leave sufficient space around the power plug so that it can be unplugged easily. If objects are placed around the power plug, you will be unable to unplug it in an emergency.

# Handling

**WARNING**

- Do not attempt to disassemble or modify the printer. There are high-temperature and high-voltage components inside the printer which may result in a fire or electrical shock.
- Electrical equipment can be hazardous if not used properly. To avoid injury, do not allow children access to the interior of any electrical product and do not let them touch any electrical contacts or gears that are exposed.
- If the printer makes strange noises, or emits smoke, heat or unusual smells, immediately turn OFF the power switch, and disconnect the USB cable if it is connected. Then, unplug the power plug from the AC power outlet and contact your local authorized Canon dealer. Otherwise, this may result in a fire or electrical shock.
- Do not use highly flammable sprays near the printer. If gas from these sprays comes into contact with the electrical components inside the printer, it may result in a fire or electrical shock.
- Always turn OFF the power switch, and disconnect the interface cables when moving the printer. Otherwise, the power cord or interface cables may be damaged, resulting in a fire or electrical shock.
- Do not drop paper clips, staples, or other metal objects inside the printer. Also, do not spill water, liquids, or flammable substances (alcohol, benzene, paint thinner, etc.) inside the printer. If these items come into contact with a high-voltage area inside the printer, it may result in a fire or electrical shock. If these items are dropped or slipped inside the printer, immediately turn OFF the power switch and disconnect the USB cable if it is connected. Then, unplug the power plug from the AC power outlet and contact your local authorized Canon dealer.
- When plugging or unplugging the USB cable when the power plug is plugged in an AC power outlet, do not touch the metal part of the connector, as this may result in electrical shock.

**CAUTION**

- Do not place heavy objects on the printer, as they may tip over or fall resulting in personal injury.
- Be careful when handling the expansion board. Touching the edges or a sharp portion of the expansion board may result in personal injury.
- Turn OFF the power switch for safety when the printer will not be used for a long period of time such as overnight. Also, turn OFF the power switch on the right of the printer and unplug the power plug for safety when the printer will not be used for an extended period of time such as during consecutive holidays.
- Keep your hands or clothing away from the roller in the output area. Even if the printer is not printing, sudden rotation of the roller may catch your hands or clothing, resulting in personal injury.
- The laser beam can be harmful to human bodies. Since radiation emitted inside the printer is completely confined within protective housings and external covers, the laser beam cannot escape from the printer during any phase of user operation. Read the following remarks and instructions for safety.

- Never open covers other than those instructed in this manual.
- Do not remove the caution label attached to the cover of the laser scanner unit.

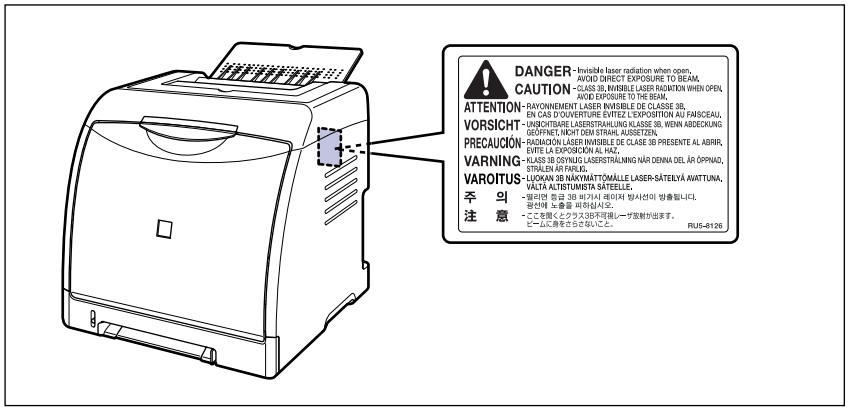


- If the laser beam escapes from the printer, exposure may cause serious damage to your eyes.

# Maintenance and Inspections

**WARNING**

- When cleaning the printer, turn OFF the main power switch, remove the USB cable, and then unplug the power plug. Failure to observe these steps may result in a fire or electrical shock.
- Unplug the power plug from the AC power outlet regularly, and clean the area around the base of the power plug's metal pins and the AC power outlet with a dry cloth to ensure that all dust and grime is removed. If the power plug is plugged for a long period of time in a damp, dusty, or smoky location, dust can build up around the power plug and become damp. This may cause a short circuit and result in a fire.
- Clean the printer using a slightly dampened cloth with water or a mild detergent diluted with water. Do not use alcohol, benzene, paint thinner, or other flammable substances. If flammable substances come into contact with electrical parts inside the printer, it may result in a fire or electrical shock.
- There are some areas inside the printer which are subject to high-voltages. When removing jammed paper or when inspecting the inside of the printer, do not allow necklaces, bracelets, or other metal objects to touch the inside of the printer, as this may result in burns or electrical shock.
- Do not throw a used toner cartridge into open flames, as this may cause the toner remaining inside the cartridge to ignite, resulting in burns or a fire.

## ⚠ CAUTION

- **Never attempt to service this printer yourself, except as explained in this manual. There are no user serviceable parts inside the printer. Adjust only those controls that are covered in the operating instructions. Improper adjustment could result in personal injury and/or damage requiring extensive repair that may not be covered under your Limited Warranty.**
- **The fixing unit and its surroundings inside the printer become hot during use. When removing jammed paper or when inspecting the inside of the printer, do not touch the fixing unit and its surroundings, as doing so may result in burns or electrical shock.**

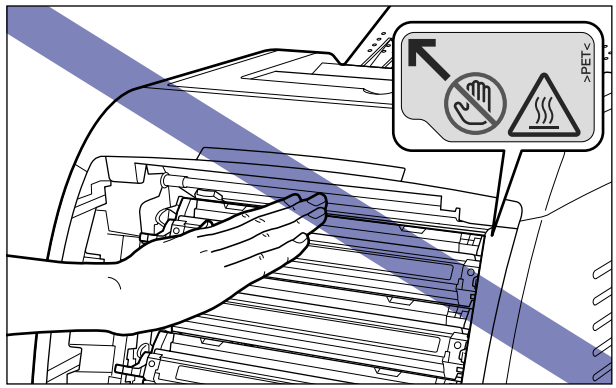


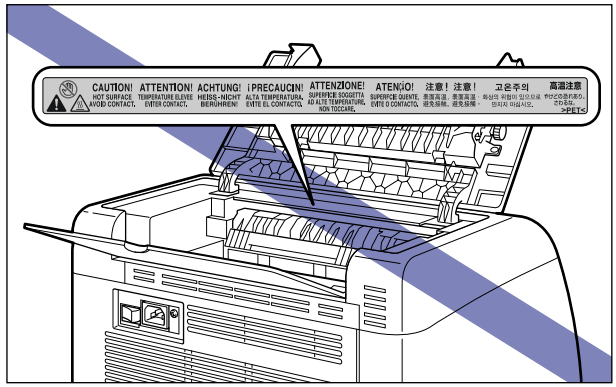


- **When removing jammed paper or replacing a toner cartridge, take care not to allow the toner to come into contact with your hands or clothing, as this will dirty your hands or clothing. If they become dirty, wash them immediately with cold water. Washing with warm water will set the toner and make it impossible to remove the toner stains.**
- **When removing paper jammed inside the printer, remove the jammed paper gently to prevent the toner on the paper from scattering and getting into your eyes or mouth. If the toner gets into your eyes or mouth, wash them immediately with cold water and immediately consult a physician.**
- **When loading paper or removing jammed paper, take care not to cut your hands with the edges of the paper.**

- When removing a used toner cartridge from the toner cartridge slot, remove the cartridge carefully to prevent the toner from scattering and getting into your eyes or mouth. If the toner enters your eyes or mouth, wash them immediately with cold water and immediately consult a physician.

## Consumables

**WARNING**

- Do not throw a used toner cartridge into open flames, as this may cause toner remaining inside the cartridge to ignite and result in burns or a fire.
- Do not store a toner cartridge or copy paper in places exposed to open flames, as this may cause the toner or paper to ignite and result in burns or a fire.

**CAUTION**

Keep toner cartridges and other consumables out of the reach of small children. If these items are ingested, consult a physician immediately.

# Before You Start

1

CHAPTER

This chapter describes the major features and basic functions of this printer.


Features and Benefits . . . . . 1-2

CD-ROM . . . . . 1-4

CD-ROM Setup . . . . . 1-5

Parts and Their Functions . . . . . 1-7

Printer Unit . . . . . 1-7

Indicators . . . . . 1-10

Optional Accessories . . . . . 1-11

Paper Feeder . . . . . 1-11

Network Board . . . . . 1-12

# Features and Benefits

This section describes the major features.

## ■ High Definition Full Color Printing

This printer is fitted with a 600 dpi full color laser printer engine. Through additional gradation control, this delivers 9600 dpi equivalent x 600 dpi high quality printing. Furthermore, calibration processing provides consistently stable images.

## ■ High Performance Printing System "CAPT"

LBP5100 is equipped with the latest high performance printing system, "CAPT" (Canon Advanced Printing Technology), that is compatible with Windows operating systems. As this system allows data to be batch processed by a computer instead of a printer, it enables high-speed printing, making full use of the features of the computer. Also, a large amount of data can be processed without expanding the printer memory.

## ■ Compact Design

Although LBP5100 is a color printer, it is compact enough to fit on a desktop.

## ■ USB 2.0 Hi-Speed Installed as Standard

LBP5100 achieves high-speed transmission by supporting Hi-Speed I/F USB 2.0 that offers up to 480 Mbps transmission speeds.

## ■ Duplex Unit Installed as Standard

LBP5100 is supplied with the duplex unit. Therefore, you can automatically perform 2-sided printing with paper (A4, Legal, Letter, and Foolscap size) loaded in the manual feed slot or paper cassette. By doing so, you can save paper and make the file space more efficient.

## ■ Easy Maintenance

The toner cartridges (Canon Genuine Cartridges) of four colors (Cyan, Magenta, Yellow, and Black) in which toner and drum are integrated relieve you from toner replenishment and drum replacement that tend to stain your hands, achieving easy routine maintenance that only requires replacement of these toner cartridges. Furthermore, because the cover is located on the front, you can easily replace the toner cartridges and remove paper jammed inside the printer. This feature is achieved by centralizing all the operations (feeding paper, development, and transferring and fixing toner) at the front of the printer and simplifying the paper transport path.

## ■ Low Power Consumption and Quick Startup

By adopting "On-demand Fixing System", LBP5100 achieves low power consumption and quick startup. This Canon's original technology enables instantaneous heating of the fusing heater only before printing, saving warm-up time. So, LBP5100 is always in standby status and ready to print. Also, thanks to its power-saving design, the fixing unit's power consumption is very low when idle.

## ■ Supporting Various Types of Media

Supports various types of media including plain paper, heavy paper, envelopes (Envelope DL, Envelope COM10, Envelope C5, Envelope Monarch, and Envelope B5), Index Card size media, labels, and transparencies (Black and white printing only). Although LBP5100 is designed for printing media of A4 size or smaller, you can print A3 and B4 size data on A4 size paper by using the function to reduce the standard paper sizes.

You can also print irregular, custom size paper.

## ■ Network-capable Printer

LBP5100 can be used as an Ethernet network printer by installing the optional network board. The network board enables the operation of the printer using a built-in web browser "Remote UI" allowing you to specify settings and manage the printer from a computer on the network.

NOTE

For details on the operating systems that support the optional network board and procedure for setting the board, see "Network Guide".

## ■ User-Friendly Color Control

The user interface with thumbnails delivers intuitive and easy to use color tone adjustment.

# CD-ROM

The CD-ROM supplied with the printer includes the following software.

## ■ CAPT (Canon Advanced Printing Technology) software, USB class driver

The CAPT (Canon Advanced Printing Technology) software included on the supplied CD-ROM is software that is required to print using this printer. Be sure to install the CAPT software on the computer you are using.
The USB class driver is software that is required to print using a USB port. The following kinds of CAPT (Canon Advanced Printing Technology) software and USB class drivers are available.

- CAPT printer driver for Windows 98/Me
- CAPT printer driver for Windows 2000/XP/Server 2003
- USB class driver for Windows 98*

* When using a USB class driver for Windows Me/2000/XP/Server 2003, use the one supplied with the operating system.

NOTE

Be sure to read the README file by clicking [ ] on the installation window before installing.

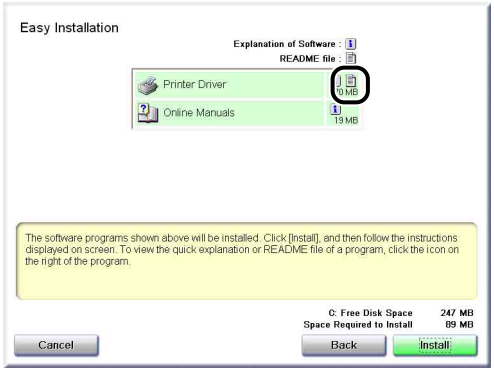


## ■ NetSpot Device Installer, Print Monitor Installer

The supplied CD-ROM includes "NetSpot Device Installer" that performs the initial settings for the network protocol and "Print Monitor Installer" that creates the port (Canon CAPT Port) for connecting your computer to the printer on the TCP/IP network. When the printer driver is installed from CD-ROM Setup, the initial settings for the network and the port creation are performed automatically. Use "NetSpot Device Installer" or "Print Monitor Installer" as needed when you specify the IP address again manually or when you want to create a port (Canon CAPT Port) without using CD-ROM Setup.

NOTE

For more details on "NetSpot Device Installer" and "Print Monitor Installer", see "Chapter 2 Setting Up the Network Environment for Printing" in Network Guide.

## CD-ROM Setup

When the supplied CD-ROM is inserted into the CD-ROM drive, the following CD-ROM Setup appears automatically.

The software installation, etc. can be performed from the CD-ROM Setup.

### ■ Easy Installation

Clicking this button allows you to install the printer driver and the instruction manuals simultaneously.

### ■ Custom Installation

Clicking this button allows you to select whether to install the printer driver only or install the manuals only.

### ■ Additional Software Programs

Clicking this button allows you to install "NetSpot Device Installer".

NOTE

For more details on "NetSpot Device Installer", see "Chapter 2 Setting Up the Network Environment for Printing" in  Network Guide.

## ■ Display Manuals

Clicking this button displays the manuals for LBP5100 ([User's Guide], [Network Guide], and [Remote UI Guide]).
Clicking [PDF] next to each guide displays the respective PDF manuals. To view the manuals in PDF format, Adobe Reader/Adobe Acrobat Reader is required. If Adobe Reader/Adobe Acrobat Reader is not installed on the system you are using, download it from the Adobe Systems Incorporated website.

* The following PDF manuals are included in the "Manuals" folder in the supplied CD-ROM.

User's Guide: UsersGuide.pdf

Network Guide: NetworkGuide.pdf

Remote UI Guide: RemoteUIGuide.pdf

## ■ Exit

Clicking this button closes the CD-ROM Setup.

NOTE

If CD-ROM Setup does not appear, select [Run] from the [Start] menu, enter "D:\English\MInst.exe", and then click [OK].
(The CD-ROM drive name is indicated as "D:" in this manual. The CD-ROM drive name may differ depending on the computer you are using.)

# Parts and Their Functions

This printer consists of components that perform various functions. This section describes the name and function of each part in order for you to use this printer properly to make full use of its functions.

## Printer Unit

The following are the parts and functions of the printer unit.

**CAUTION**

**Never block the ventilation slots on the printer. The ventilation slots are provided for proper ventilation of working parts inside the printer. Blocking the ventilation slots can cause the printer to overheat, resulting in a fire.**

### *Front View*

The following are the parts on the front side of the printer and their functions.

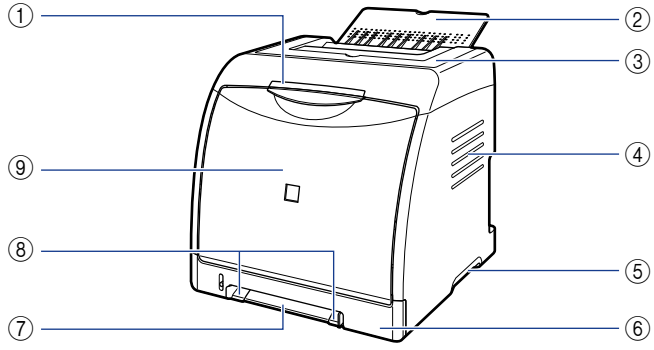


**① Indicators**

Show the status of the printer. (See p. 1-10)

**② Output Tray**

Outputs paper with the printed side facing down. (See p. 3-15)

**③ Top Cover**

Opened when removing jammed paper. (See p. 7-3)

**④ Ventilation Slots**

Ventilate air to cool the insides of the printer.

**⑤ Lift Handles**

Hold these handles when moving the printer. (See p. 6-29)

**⑥ Paper Cassette**

Can be loaded with up to 250 sheets of plain paper (of 64 g/m$^2$). (See p. 3-10)

**⑦ Manual Feed Slot**

Used when printing a sheet at a time manually. (See p. 3-10)

**⑧ Paper Guides**

Align them with the width of the paper so that the paper is fed straight.

**⑨ Front Cover**

Opened when replacing the toner cartridge or removing jammed paper. (See p. 6-4)

## Rear View

The following are the parts on the rear side of the printer and their functions.

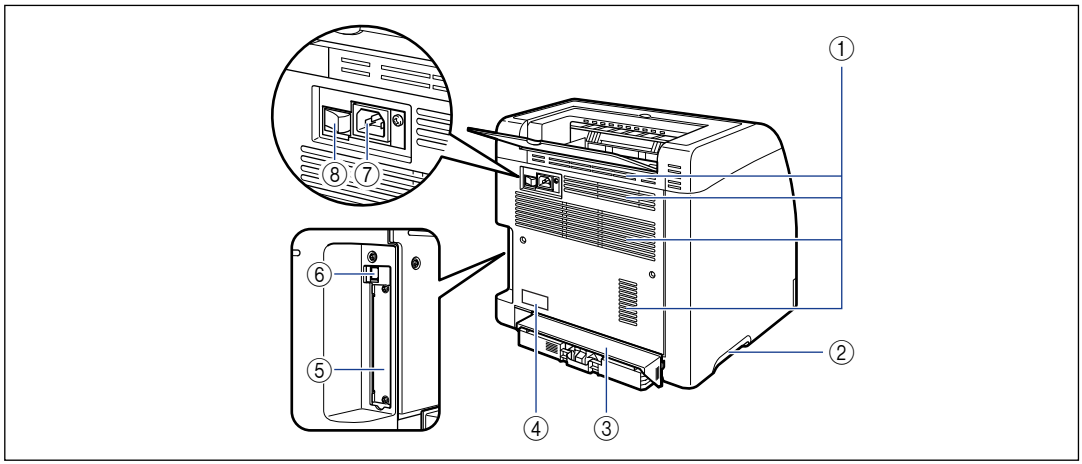


**① Ventilation Slots**

Ventilate air to cool the insides of the printer.

**② Lift Handles**

Hold these handles when moving the printer. (See p. 6-29)

**③ Cassette Protective Cover**

Prevents dirt and dust from entering the paper cassette.

**④ Rating Label**

The serial number (Serial No.) for printer identification is indicated on this label. The number is required for receiving service or repairs. The current value indicated in this rating label shows the average power current consumption.

**⑤ Expansion Slot**

The optional network board is installed in this slot. (See p. 8-18)

**⑥ USB Connector**

Connected to the USB cable. Connect the other end of the cable to the USB port on the computer. (See p. 2-31)

**⑦ Power Socket**

Connect the supplied power cord to this socket.

**⑧ Power Switch**

Turns the power of the printer ON/OFF. (See p. 2-36)

## Inner View

The following are the parts inside the printer and their functions.

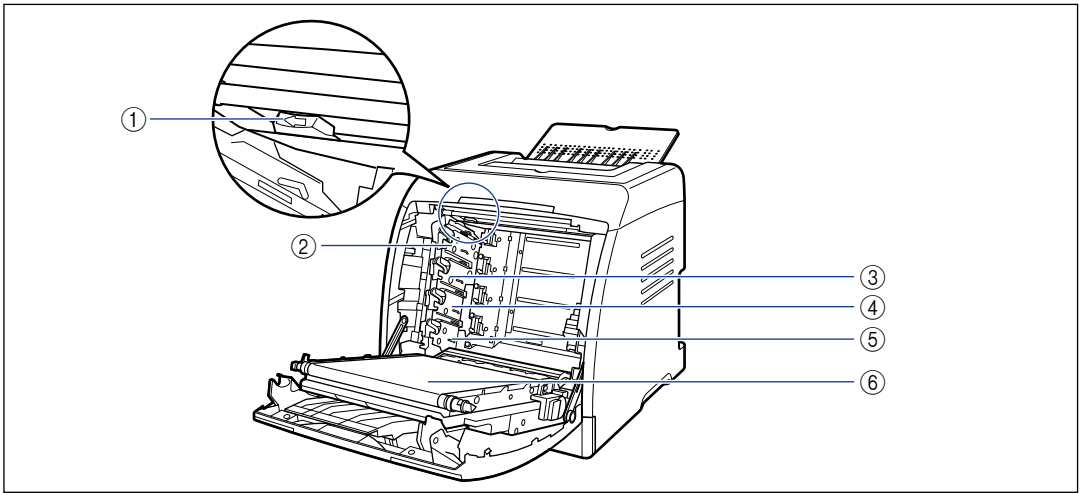


**① Static Charge Eliminator Cleaner**

Used when cleaning the static charge eliminator. (See p. 6-24)

**② K (Black) Toner Cartridge Slot**

The K (black) toner cartridge is installed in this slot.

**③ Y (Yellow) Toner Cartridge Slot**

The Y (yellow) toner cartridge is installed in this slot.

**④ C (Cyan) Toner Cartridge Slot**

The C (cyan) toner cartridge is installed in this slot.

**⑤ M (Magenta) Toner Cartridge Slot**

The M (magenta) toner cartridge is installed in this slot.

**⑥ ETB (Electro static Transfer Belt) Unit**

Transfers toner of four colors onto paper while transporting it.

# Indicators

NOTE

You can confirm information about the printer status using the Printer Status Window from the computer you are using. For details on the Printer Status Window, see "Printer Status Window," on p. 5-89.

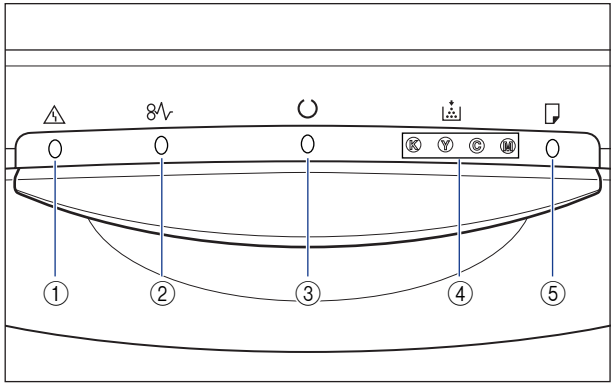


* Unlike in the above illustration, the indicator names are indicated above the respective icons depending on the country or region.

① **Alarm Indicator (Orange)**

On: Service call is occurring. (See p. 7-21)
Blinking: An error is occurring, disabling printing. (See p. 7-24)

② **Paper Jam Indicator (Orange)**

Blinking: A paper jam is occurring, disabling printing. (See p. 7-3)

③ **Ready Indicator (Green)**

On: The printer is in the sleep mode and ready to print.
Blinking: The printer is busy performing some kind of processing or operation, such as printing, warming up, calibrating, or pausing a job.

④ **Toner Indicator (Orange)**

On: Toner cartridge replacement is required. (See p. 6-2)
Blinking: Cannot print because toner cartridge replacement is required or any toner cartridge is not installed properly. (See p. 6-2)
Indicator of the color that requires toner cartridge replacement comes on or blinks. "K", "Y", "C", and "M" indicate black, yellow, cyan, and magenta respectively.

⑤ **Load Paper Indicator (Orange)**

On: There is no paper in any paper source. (See p. 3-17)
Blinking: No paper or paper of an inappropriate size is loaded. (See p. 3-17)

# Optional Accessories

The following optional accessories are available in order to use this printer to its full extent. Purchase them to fulfill your needs. For the optional accessories, contact your local authorized Canon dealer.



## Paper Feeder

This printer is supplied with 2 paper sources: the paper cassette and manual feed slot. By installing the optional paper feeder, up to 3 paper sources can be used.

Paper Feeder Unit PF-92 consists of a paper feeder and paper cassette.

The paper cassette can be loaded with up to approximately 250 sheets of plain paper (64 g/$m^2$) at sizes of A4, B5, A5, Legal, Letter, Executive, Statement, Foolscap, 16K, Envelope, Index Card, and paper at the following custom paper sizes.

- Width 76.2 to 215.9 mm; Length 127.0 to 355.6 mm

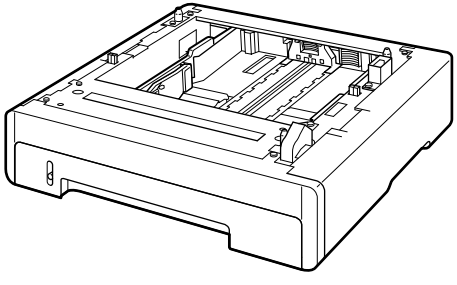

Paper Feeder Unit PF-92

NOTE

- The paper feeder is designed for LBP5000/5100. You cannot use a paper feeder designed for other models.
- For details on the procedure for installing the paper feeder, see "Paper Feeder," on p. 8-2.

# Network Board

The network board fits inside the printer and is compatible with the TCP/IP protocol for connecting the printer to LAN. The network board enables the operation of the printer using a built-in web browser "Remote UI" allowing you to specify settings and manage the printer from a computer on the network. Also, you can use "NetSpot Device Installer" that configures and manages a printer connected to a network on a computer.

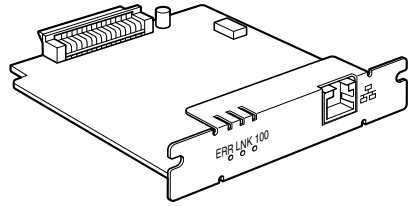


Network board (NB-C2)

NOTE

- For details on "Remote UI", see "Remote UI Guide".
- For more details on "NetSpot Device Installer", see "Network Guide".
- For details on the procedure for installing the network board, see "Network Board," on p. 8-18.

# Installing the Printer

2
CHAPTER

This chapter describes the procedure from taking this printer out of the package to installing the printer.


Installation Procedure . . . . . 2-2

Installation Site . . . . . 2-3

Installation Environment . . . . . 2-3

Installation Space . . . . . 2-5

Confirming the Package Contents . . . . . 2-8

Carrying the Printer to the Installation Site and Removing the Packing Materials on the Outside of the Printer . . 2-9

Removing the Packing Materials inside the Printer and Installing the Toner Cartridges . . . . 2-13

Removing the Packing Material in the Paper Cassette and Loading Paper . . . . . 2-24

Connecting the Power Cord . . . . . 2-29

Connecting to a Computer . . . . . 2-31

Using a USB Cable . . . . . 2-31

Using a LAN Cable . . . . . 2-33

Setting Up the Printing Environment . . . . . 2-35

Turning the Printer ON/OFF . . . . . 2-36

Turning the Printer ON . . . . . 2-36

Turning the Printer OFF . . . . . 2-37

Power Saving (Sleep Mode) . . . . . 2-38

# Installation Procedure

According to your installation condition, perform the relevant procedure. When you do not install the optional accessories, skip the procedures indicated with (Optional).

1. **Installing the Paper Feeder (See p. 8-2)** (Optional)
2. **Installing the Printer Unit (See p. 2-9)**
3. **Installing the Toner Cartridges (See p. 2-13)**
4. **Loading Paper (See p. 3-17, p. 3-29, p. 3-40)**
5. **Installing the Network Board (See p. 8-18)** (Optional)
6. **Connecting the Power Cord (See p. 2-29)**
7. **Connecting the Printer Unit and a Computer (See p. 2-31)**
8. **Installing the CAPT Software (See p. 4-1)**

# Installation Site

In order to use this printer in a safe and comfortable manner, install the printer in a place that fulfills "Temperature/Humidity Conditions", "Power Supply Requirements", and "Installation Requirements" described in "Installation Environment".

IMPORTANT

Before installing the printer, be sure to read "Important Safety Instructions" (See p. xviii).

## Installation Environment

Select an installation site for this printer in view of the following environmental conditions.

### *Temperature/Humidity Conditions*

Use the printer in a location where the temperature and humidity are in the following ranges.

- Ambient temperature: 10 to 30 °C (50 to 86 °F)
- Ambient humidity: 10 to 80 % RH (no condensation)

IMPORTANT

- Water droplets (condensation) may form inside the printer under the following circumstances. Leave the printer for two hours or more to adjust the surrounding temperature and humidity before using it.
  - When the room where the printer is installed is heated rapidly
  - When the printer is moved from a cool or dry location to a hot or humid location
- If water droplets form inside the printer, the paper transport path will not function properly, and this may result in paper jams or poor print quality.

#### ■ To customers using an ultrasonic humidifier

If you use an ultrasonic humidifier in conjunction with tap water or well water, impurities in the water will be dispersed through the air. These can be trapped inside the printer, causing degradations in printing quality. When you are using these humidifiers, it is therefore recommended that you use purified water or other water that is free of impurities.

## Power Supply Requirements

The maximum power consumption of this printer is 840 W or less for the 220 to 240 V model (and 790 W or less for 110 to 127 V model). Electrical noise or a dramatic drop in mains voltage may cause the printer to operate incorrectly or lose data, and can also cause the computer to fail.

Use power supplies rated for voltages in the following ranges.

- 110 to 127 V (± 10 %) 50/60 Hz (± 2 Hz)
- 220 to 240 V (± 10 %) 50/60 Hz (± 2 Hz)

IMPORTANT

- An AC power outlet should be used exclusively for the printer. Any other sockets of the AC power outlet should not be used.
- Do not plug the power plug into the auxiliary outlet on a computer.
- Do not plug the power plug of the printer and that of machinery which consumes a large amount of electricity or generates electrical noise, such as a copy machine, air conditioner, or shredder, into the same AC power outlet.

## Installation Requirements

Install the printer in the following locations.

- A location where sufficient space can be secured
- A well-ventilated room
- A flat, even surface
- A sturdy platform that can easily support the weight of the printer and optional accessories

**WARNING**

**Do not install the printer near alcohol, paint thinner, or other flammable substances. If flammable substances come into contact with electrical parts inside the printer, it may result in a fire or electrical shock.**

**CAUTION**

- **Do not install the printer in the following locations, as this may result in a fire or electrical shock.**
  - **A damp or dusty location**
  - **A location exposed to smoke and steam such as cookeries and humidifiers**
  - **A location exposed to rain or snow**
  - **A location near water faucets or water**
  - **A location exposed to direct sunlight**
  - **A location subject to high temperatures**
  - **A location near open flames**

- **Do not install the printer in unstable locations, such as unsteady platforms or inclined floors, or in locations subject to excessive vibrations, as this may cause the printer to fall or tip over, resulting in personal injury.**

IMPORTANT

Do not install the printer in the following locations, as this may result in damage to the printer.

- An environment where the temperature and/or humidity can change dramatically, or where condensation occurs
- A poorly ventilated room
- A location near products that generate magnetic waves or electromagnetic waves
- In rooms such as laboratories where chemical reactions occur
- A place where salt content, corrosive gases such as ammonia, or toxic gases are contained
- A platform that may warp from the weight of the printer and optional accessories, or the printer is liable to sink (such as a carpet or mat)



# Installation Space

Select an installation location where you can secure the following amounts of free space around the printer, and a surface that can support the weight of the printer. The dimensions of the space required around the components and the positions of the feet are as follows.

## *Required Peripheral Space*

### ■ Standard state

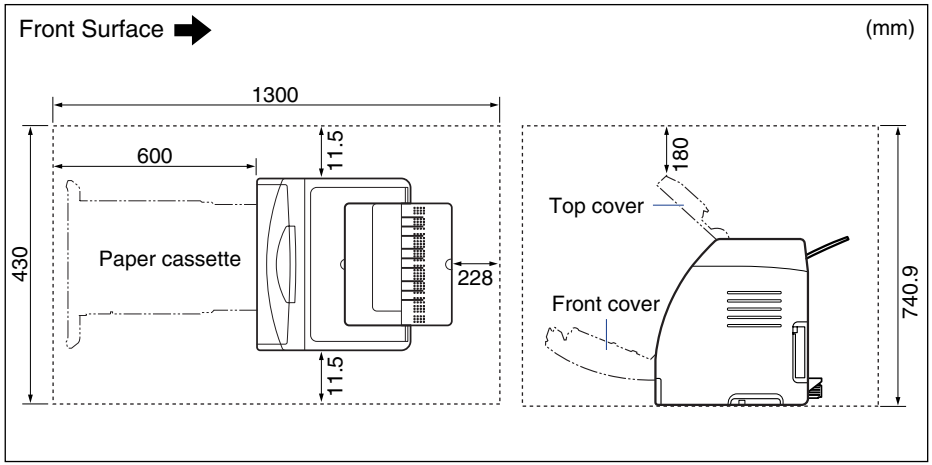

### ■ State with the paper feeder installed

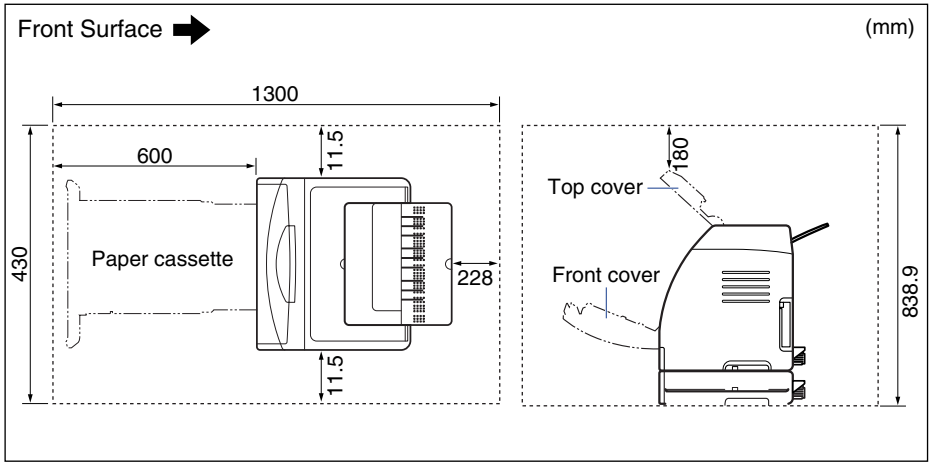


## Foot Positions

### ■ Printer unit

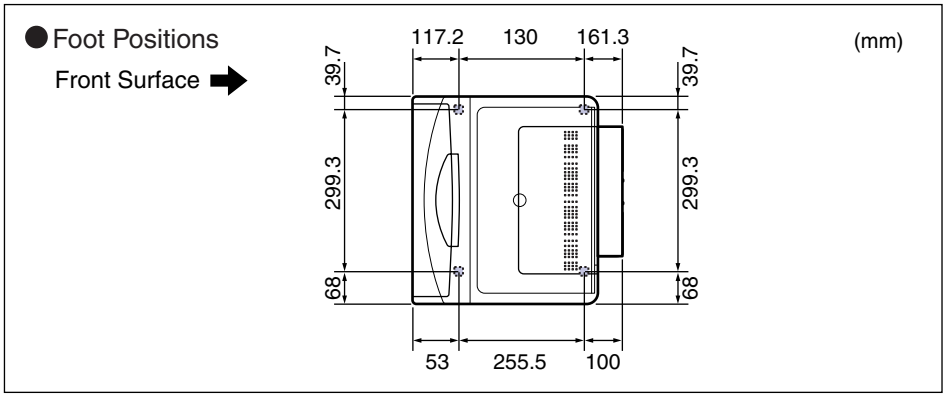


NOTE

The front feet are 5.6 mm high and their top surface is 11.5 mm square.
The rear feet are 5.0 mm high and their top surface is 14 mm square.

## ■ Paper Feeder Unit PF-92

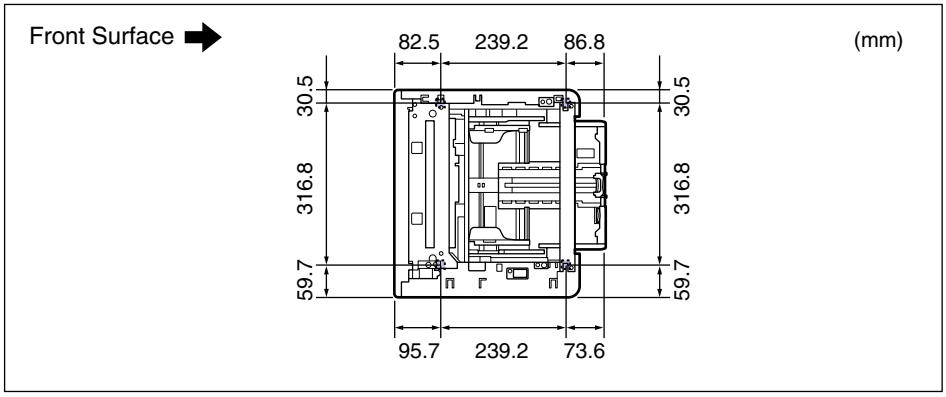


NOTE

The front feet are 3.1 mm high and their top surface is 17.3 mm square.
The rear feet are 2.5 mm high and their top surface is 17.3 mm square.

# Confirming the Package Contents

Make sure that all the following items are contained in the package before installing the printer. If any item is missing or damaged, please contact your local authorized Canon dealer.

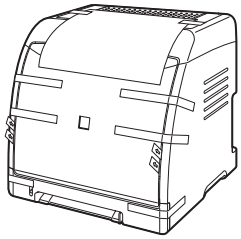

☐ Printer
(The paper cassette and toner cartridges are already installed.)

☐ Power cord
(The form of the supplied power cord may differ from the one in the above illustration.)

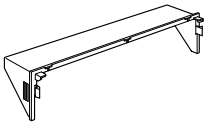

☐ Cassette protective cover

☐ CD-ROM "LBP5100 User Software"
- CAPT (Canon Advanced Printing Technology) Software
- USB class driver
- NetSpot Device Installer
- Canon CAPT Print Monitor
- User's Guide
- Network Guide
- Remote UI Guide
- CAPT Windows Firewall Utility

NOTE

This printer does not come with an interface cable. Have an appropriate one available for the computer you are using or the connecting method. Use a USB cable with the following symbol.

# Carrying the Printer to the Installation Site and Removing the Packing Materials on the Outside of the Printer

After securing the installation site, carry the printer to the installation site and remove the packing materials on the outside of the printer.

**CAUTION**

**Do not remove the tape that is securing the paper cassette before carrying the printer to the installation site. If you do so, the paper cassette may drop resulting in personal injury.**

IMPORTANT

- When installing the optional paper feeder, place it on the installation site before carrying the printer unit to the site. For details on installing the paper feeder, see "Paper Feeder," on p. 8-2.
- Secure sufficient space around the printer at the installation site so that you can install the optional accessories and connect cables.
- The removed packing materials are required when transporting the printer for relocation or maintenance. Keep them where they will not get lost.

NOTE

The packing materials may be changed in form or position to be placed, or may be added or removed without notice.

## 1 Carry the printer unit to the installation site.

Carry the printer with 2 or more people by holding the center of the lift handles on the lower portion of the printer and lifting it up at the same time.

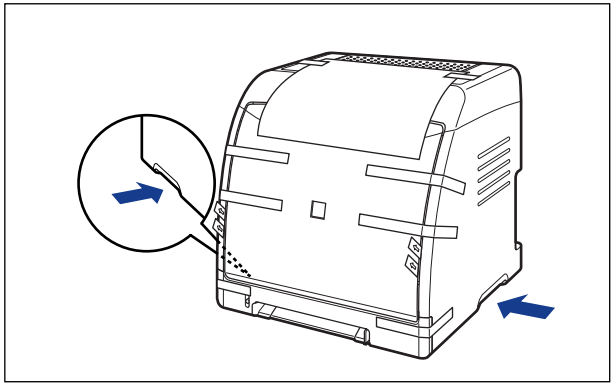

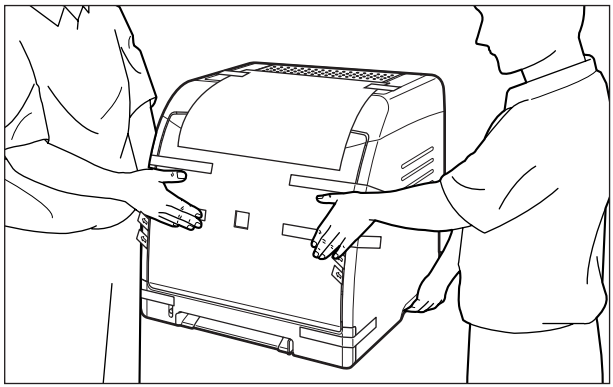

**CAUTION**

- **This printer weighs approximately 20.4 kg without the cassette protective cover installed. The printer must be carried by 2 or more people, and care must be taken to avoid hurting your back or other portions of your body when carrying the printer.**

- **Be sure not to hold the printer by the paper cassette, output area, or any portions other than the lift handles. If you do so, you may drop the printer, resulting in personal injury.**

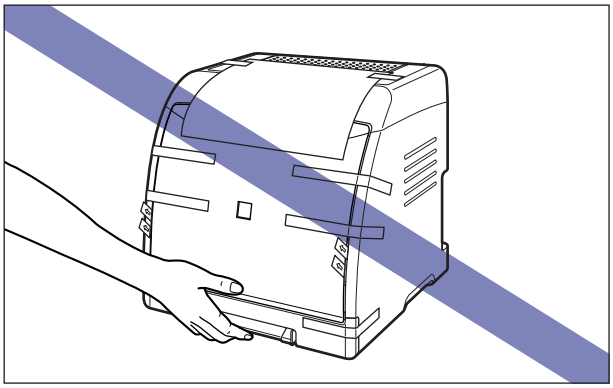

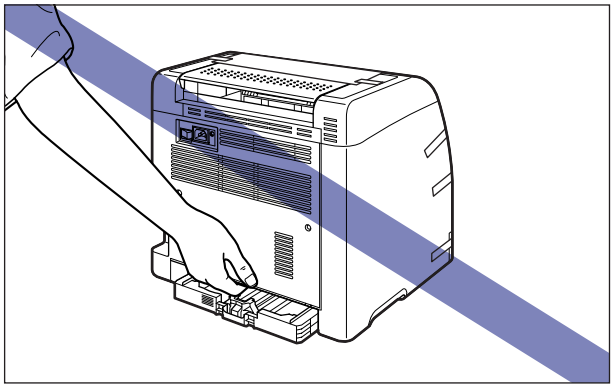

- **The front portion of the printer (A) is relatively heavy. Be careful not to get off-balanced when lifting the printer. If you do so, you may drop the printer, resulting in personal injury.**

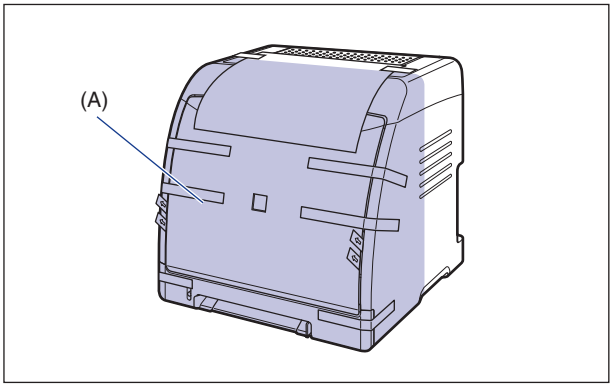

## 2 Put the printer down carefully at the installation site.

**CAUTION**

**Put the printer down slowly and carefully. Be careful not to hurt your hands.**

## 3 Remove the paper on which cautions are described.

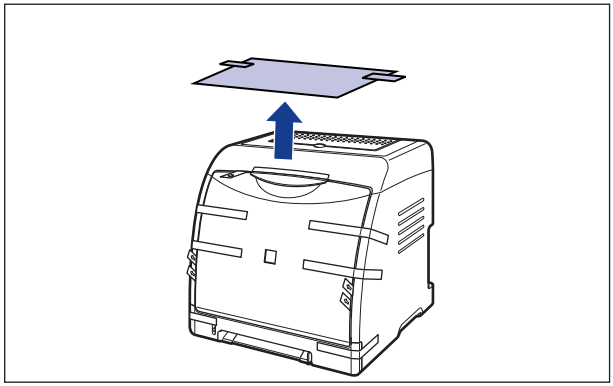

## 4 Remove the tape attached to the printer (6 locations).

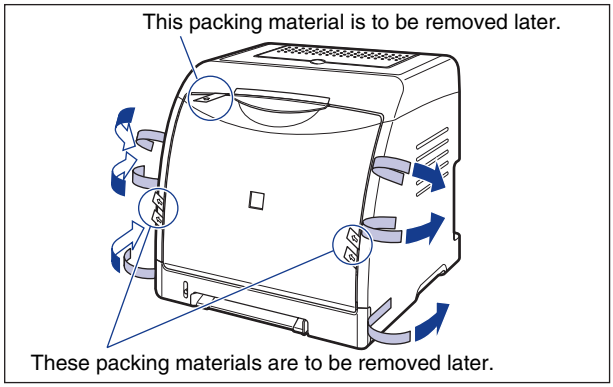

# Removing the Packing Materials inside the Printer and Installing the Toner Cartridges

The toner cartridges to which packing materials are attached are already installed in the printer.

Be sure to take out the toner cartridges once, and then remove the packing materials using the following procedure.

**CAUTION**

**Take care not to allow the toner to come into contact with your hands or clothing, as this will dirty your hands or clothing. If they become dirty, wash them immediately with cold water. Washing with warm water will set the toner and make it impossible to remove the toner stains.**

IMPORTANT

Dispose of the packing materials according to local regulations.

NOTE

- For details on how to handle a toner cartridge, see "Precautions for Handling Toner Cartridges," on p. 6-13.
- The packing materials may be changed in form or position to be placed, or may be added or removed without notice.

## 1 Open the front cover.

Holding the opening of the front cover, open it gently.

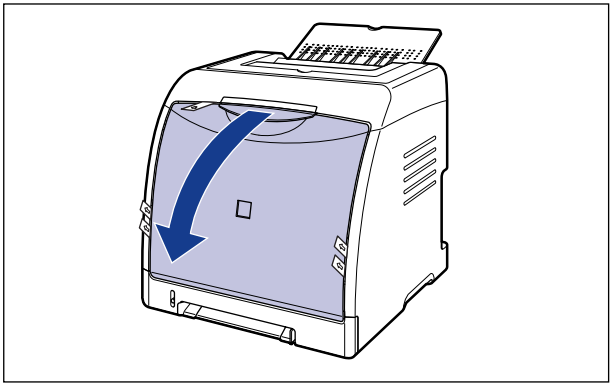

IMPORTANT

- Do not remove the packing material shown in the figure with the toner cartridges installed.

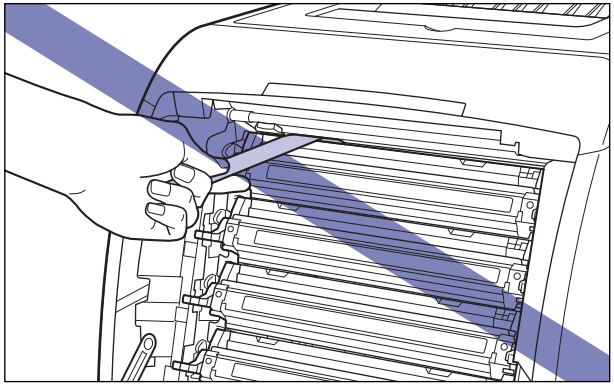

- The toner cartridges are installed in order of black, yellow, cyan, and magenta from the top as shown in the figure.

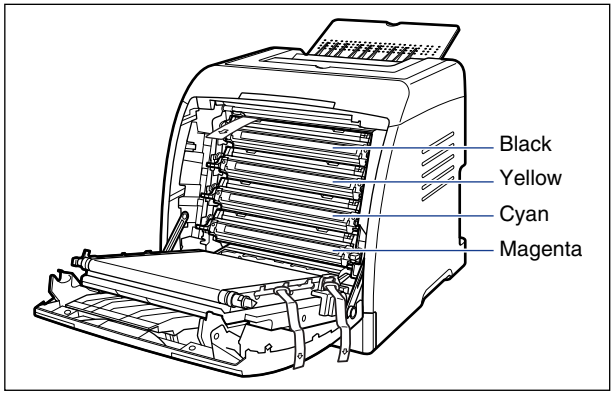

## 2 Remove the packing materials shown in the figure.

Remove the packing materials not vertically but diagonally toward the printer.

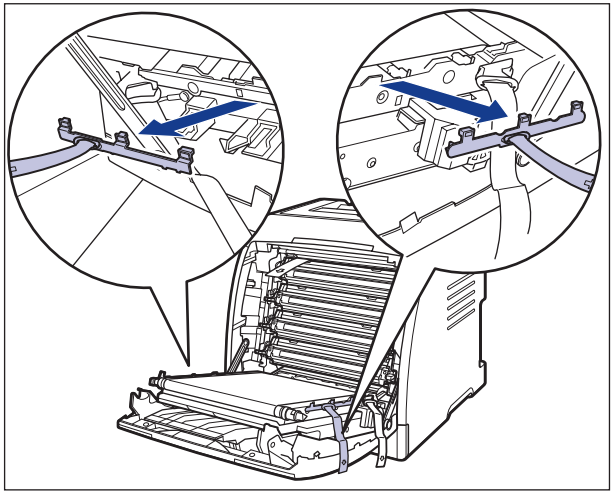

## 3 Remove the packing materials shown in the figure.

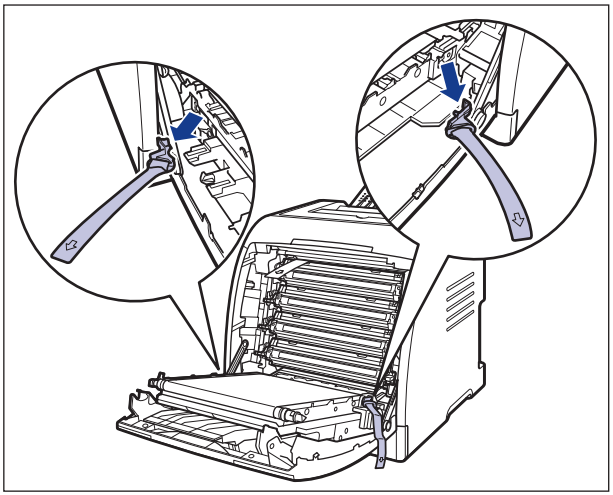

## 4 Place paper (A4 size paper is recommended) on the transfer belt of the ETB unit (A) as shown in the figure so that the paper is not shifted.

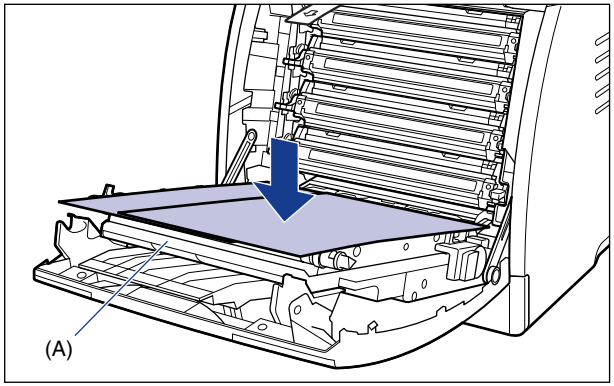


IMPORTANT

- When installing or removing the toner cartridges, be sure to place paper on the transfer belt of the ETB unit to protect the belt.

- Do not place any object on or touch the transfer belt (A) of the ETB unit. The transfer belt of the ETB unit is supplied with a function that cleans itself, therefore, do not clean the belt even when the toner is on it. If the ETB unit is broken or transfer belt is damaged, this may result in misfeeds or deterioration in print quality.

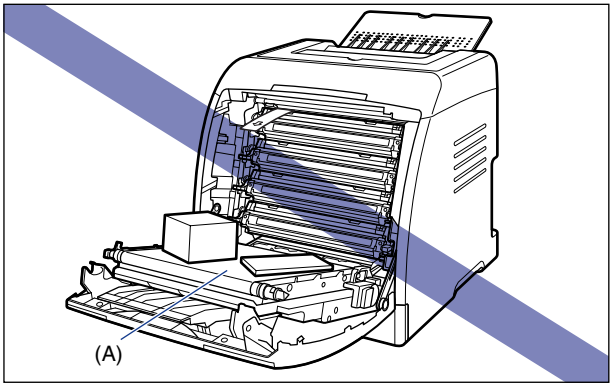


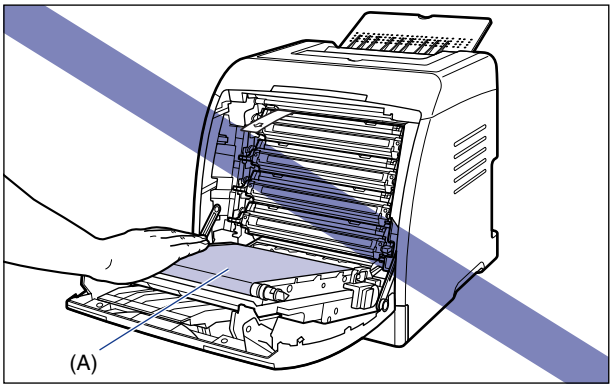

## 5 Remove all the toner cartridges.

Holding a toner cartridge by the blue tabs on the both sides, pull it horizontally.

Holding the toner cartridge with your both hands firmly, pull it out so that you do not touch the transfer belt of the ETB unit.

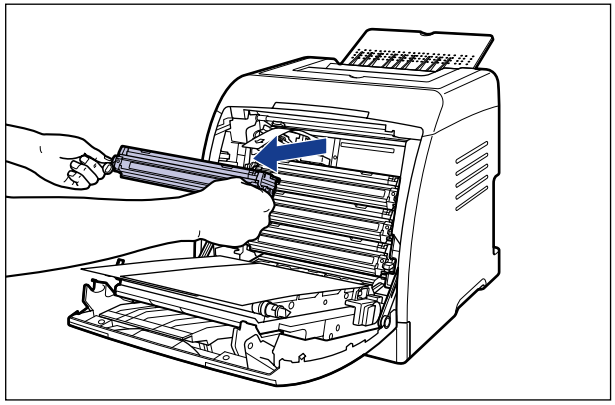

IMPORTANT

Do not touch the high-voltage contact (A) shown in the figure, as this may result in damage to the printer. (The illustration of the packing material that is to be removed in Step 6 is omitted in the following figure for the convenience of explanation.)

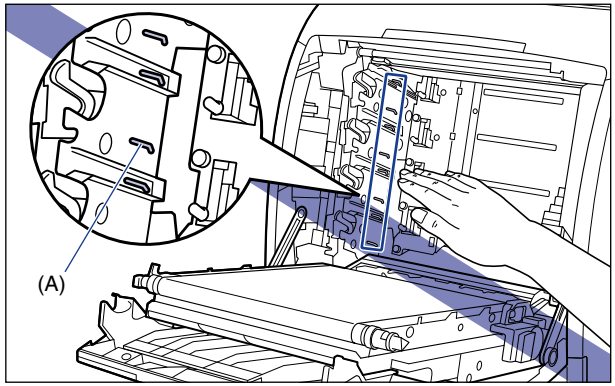

## 6 Remove the packing material shown in the figure.

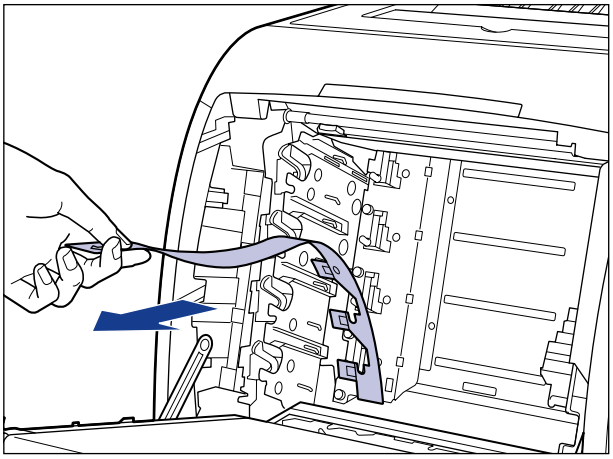

## 7 Hold the toner cartridge as shown in the figure, shake it gently 5 or 6 times to evenly distribute the toner inside the cartridge.

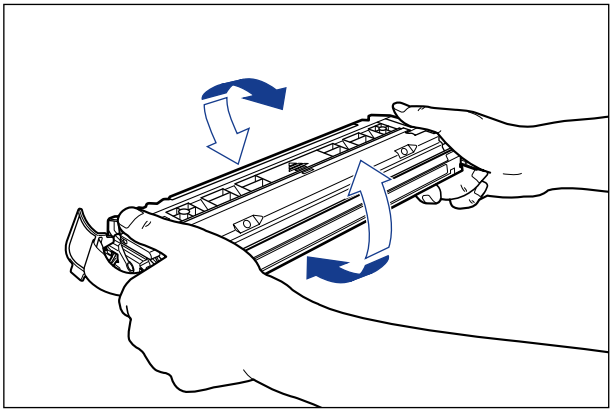

IMPORTANT

- If toner is not distributed evenly, this may result in deterioration in print quality. Be sure to carry out this procedure properly.
- Be sure to shake the toner cartridge gently. If you do not shake the cartridge gently, toner may spill out.

## 8 Place the toner cartridge on a flat surface, detach the tab of the sealing tape from the side of the toner cartridge ①, and then pull out the sealing tape (approx. 50 cm long) gently ② while supporting the toner cartridge.

Remove the sealing tape by hooking your fingers into the tab and pulling it out straight in the direction of the arrow.

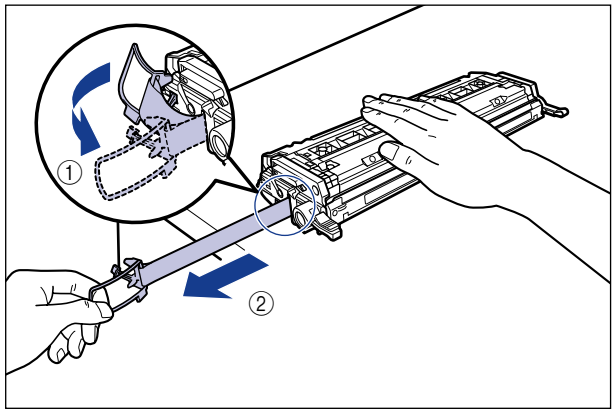


**CAUTION**

**If the sealing tape is pulled out forcefully or stopped at midpoint, toner may spill out. If the toner gets into your eyes or mouth, wash them immediately with cold water and immediately consult a physician.**

IMPORTANT

- Do not pull the sealing tape diagonally, upwards, or downwards. If the tape is severed, it may become difficult to pull out completely.

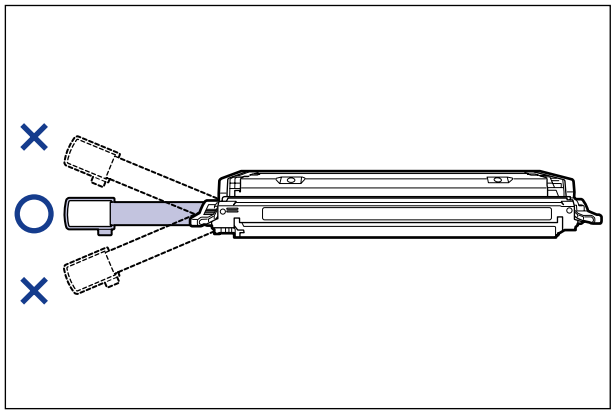

- Pull out the sealing tape completely from the toner cartridge. If any tape remains in the toner cartridge, this may result in poor print quality.

- When pulling out the sealing tape, be careful not to hold the drum protective shutter (A) with your hands.

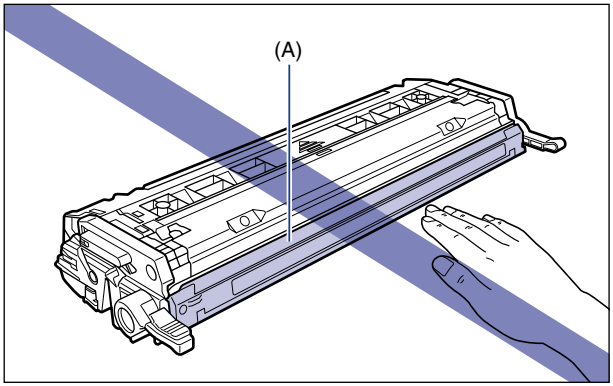


## 9 Hold the toner cartridge properly with the arrowed side facing up as shown in the figure.

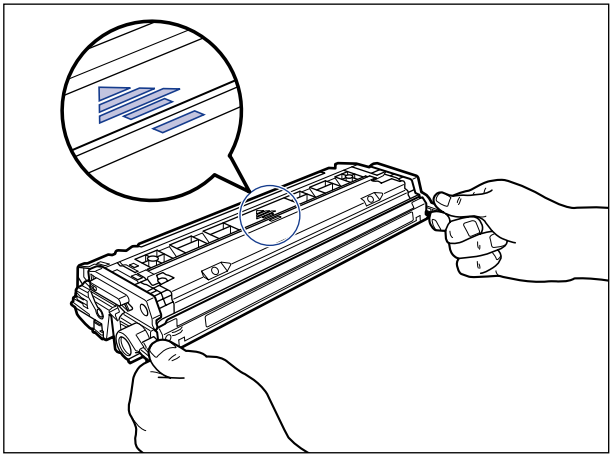

IMPORTANT

Do not hold the toner cartridge in a manner that is not directed in this procedure.

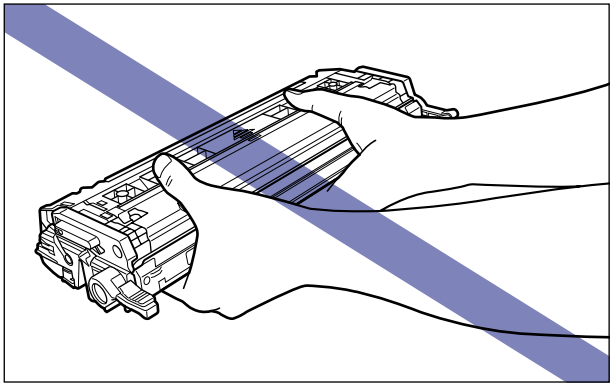

## 10 Remove the packing materials in all the toner cartridges, then install the cartridges into the printer unit.

Align (A) of the toner cartridge with the slots (B) to which the label of the same color is attached, then insert the cartridge until it stops.

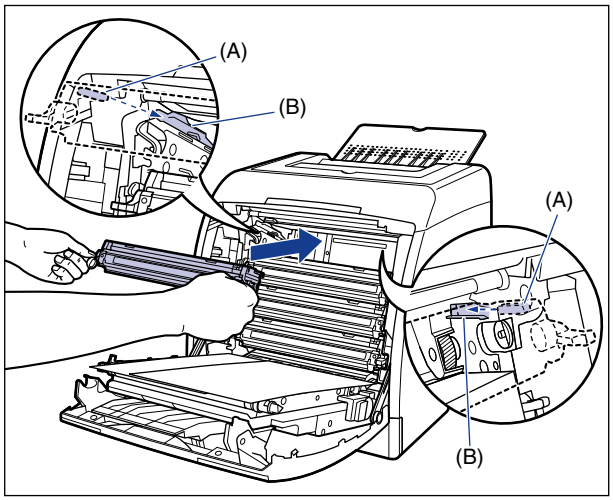


IMPORTANT

Be sure to install the toner cartridge by pushing it firmly. If the toner cartridges are not installed firmly, this may result in deterioration in print quality.

## 11 Remove the paper.

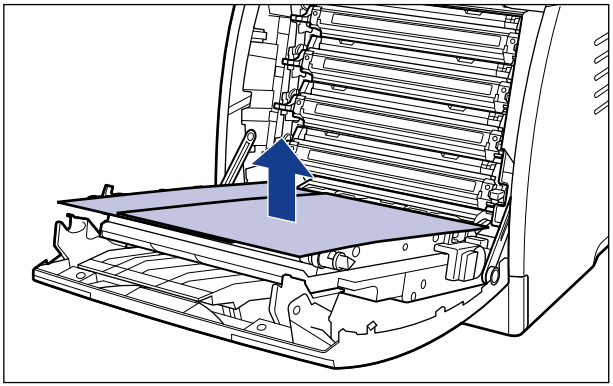

IMPORTANT

When removing the paper, be careful not to touch or damage the transfer belt of the ETB unit.

## 12 Close the front cover.

Holding the opening of the front cover, close it gently.

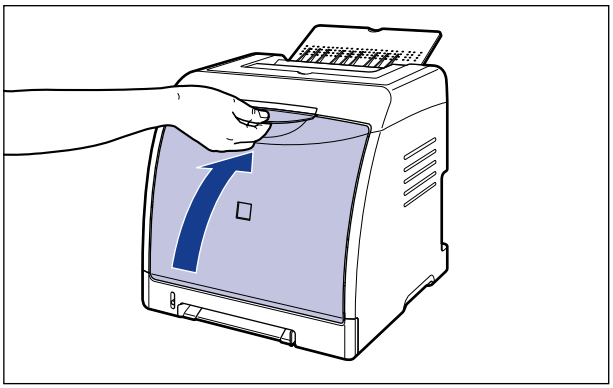

**CAUTION**

**When closing the front cover, be careful not to catch your fingers.**

IMPORTANT

- If you cannot close the front cover, check if the toner cartridge is installed properly. If you try to close the front cover forcefully, this may result in damage to the printer.
- Do not leave the front cover open for a long time after installing the toner cartridge.

# Removing the Packing Material in the Paper Cassette and Loading Paper

Remove the packing material in the paper cassette and load paper.

NOTE

The packing materials may be changed in form or position to be placed, or may be added or removed without notice.

## 1 Pull out the paper cassette.

Pull out the paper cassette gently ①.

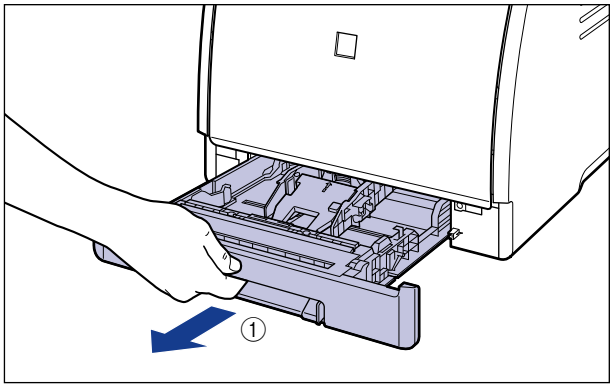


While holding the paper cassette with both hands, remove it from the printer unit as shown in the figure ②.

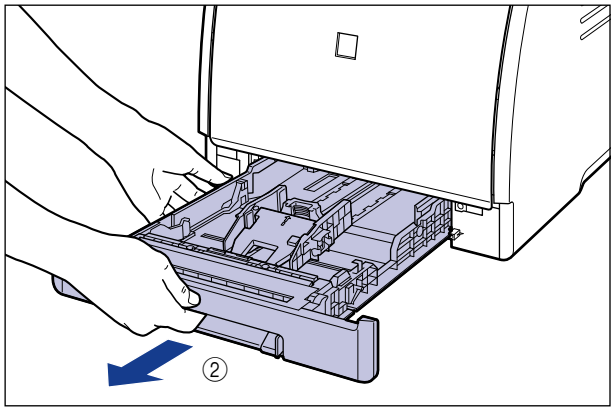

## 2 While holding the lock release lever of the side paper guides, slide the paper guides.

The side paper guides move together.

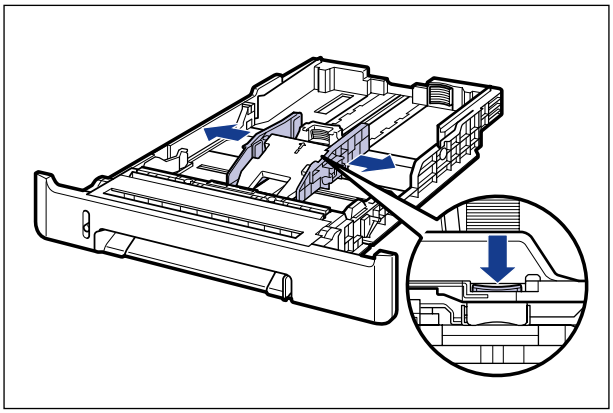

## 3 While holding the lock release lever of the rear paper guide, slide the paper guide.

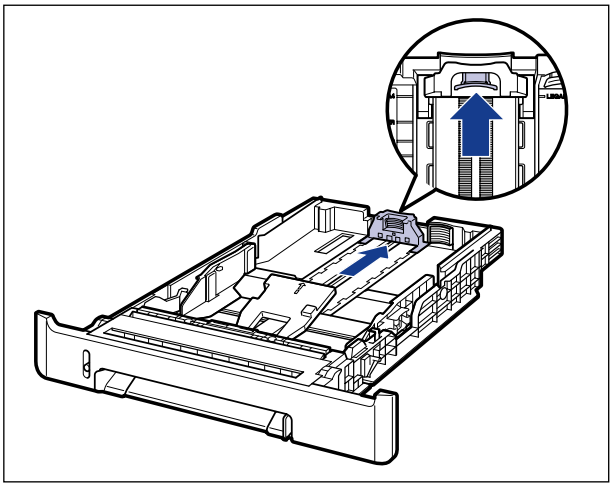

## 4 While pressing down the plate ①, remove the packing material ②.

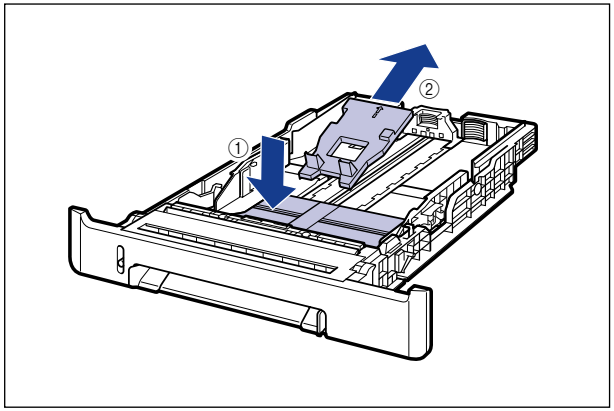


IMPORTANT

The paper cassette is provided with a packing material. Be sure to take out the paper cassette to remove the packing material.

## 5 Install the cassette protective cover.

Install the left side of the cassette protective cover ① on the printer, then while pressing the right side of the cover ②, insert the cover into the back of the printer ③ as shown in the figure.

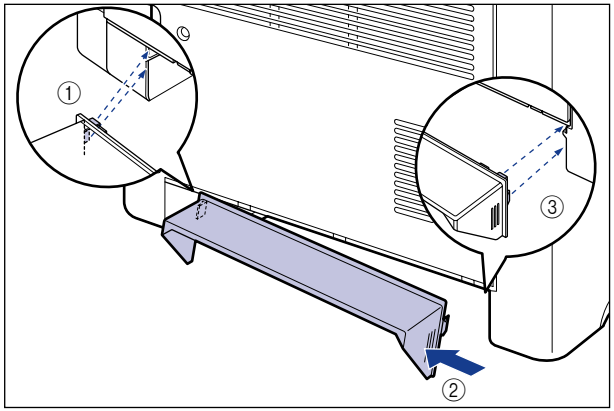

## 6 Load paper.

For details on the procedure for loading paper, see the following directions.

- When loading plain paper, heavy paper, transparencies, or labels in the paper source
  "Loading Plain Paper, Heavy Paper, Transparencies, or Labels in the Paper Source" (See p. 3-17)
- When loading Index Card size media in the paper source
  "Loading Index Card Size Media in the Paper Source" (See p. 3-29)
- When loading envelopes in the paper source
  "Loading Envelopes in the Paper Source" (See p. 3-40)
- When loading custom size paper (non-standard paper) or paper at a size of Statement, Foolscap, or 16K in the paper source
  "Loading Custom Size Paper (Non-Standard Paper) or Paper at a Size of Statement, Foolscap, or 16K in the Paper Source" (See p. 3-51)

If you want to load paper in the manual feed slot, load the paper after performing Step 7.

## 7 Set the paper cassette in the printer.

Push the paper cassette into the printer firmly until the front side of the paper cassette is flush with the front surface of the printer.

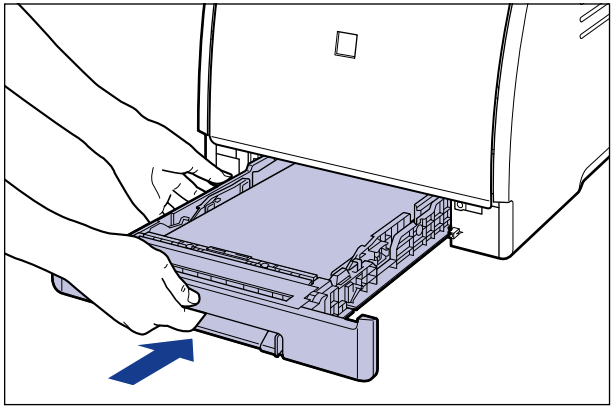

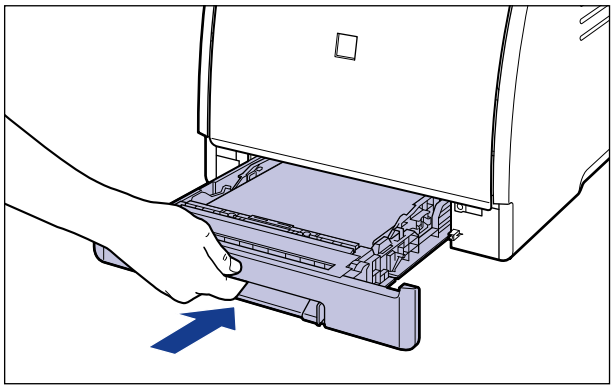

**CAUTION**

**When setting the paper cassette in the printer, be careful not to catch your fingers.**

# Connecting the Power Cord

This section describes the procedure for connecting the power cord. When connecting the power cord, see "Important Safety Instructions," on p. xviii.

IMPORTANT

- Do not plug the power plug into the auxiliary outlet on a computer.
- One AC power outlet should be used exclusively for the printer.
- Do not connect this printer to an uninterruptible power source. This may cause printer malfunction or breakdown at the occurrence of a power failure.

## 1 Make sure that the power switch of the printer is OFF.

The printer is OFF when "○" of the power switch is pressed.

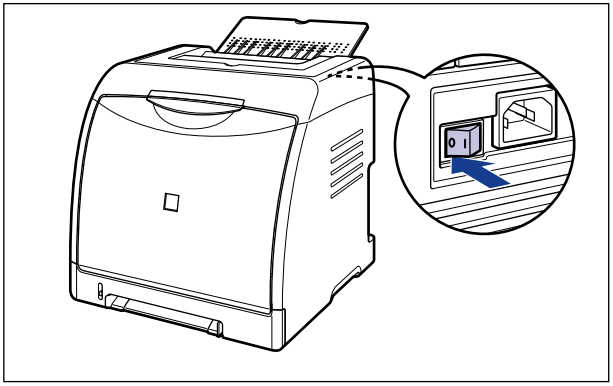

## 2 Plug the supplied power cord into the power socket.

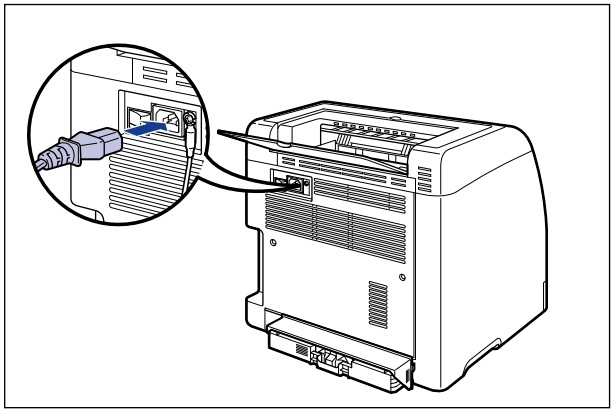

## 3 Plug the power plug into the AC power outlet.

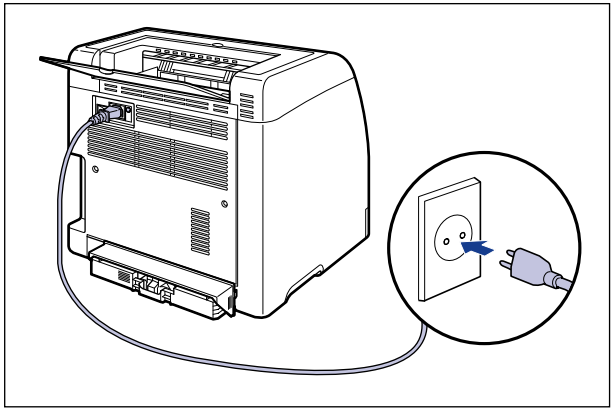

NOTE

The form of the supplied power cord may differ from the one in the above illustration.

# Connecting to a Computer

This section describes how to connect the printer to a computer and network.

As this printer is equipped with a USB connector, you can use a USB cable to connect to a computer. By installing the optional network board, the printer can be connected directly to the network using a LAN cable.



## Using a USB Cable

Connect the printer to a computer equipped with a USB port using a USB cable.

**WARNING**

**When plugging or unplugging the USB cable when the power plug is plugged in an AC power outlet, do not touch the metal part of the connector, as this may result in electrical shock.**

IMPORTANT

- Do not plug or unplug the USB cable while the computer and printer are ON, as this may result in damage to the printer.
- This printer uses bi-directional communication. Operation of the printer when connected via unidirectional communication equipment has not been tested, and as a result, Canon cannot guarantee printer operation when the printer is connected using unidirectional print servers, USB hubs or switching devices.

NOTE

- The appropriate USB interface varies depending on the operating system of the connected computer as follows. For more details, contact your local authorized Canon dealer.
  - Windows 98/Me: USB Full-Speed (USB1.1 equivalent)
  - Windows 2000/XP/Server 2003: USB 2.0 Hi-Speed/USB Full-Speed (USB1.1 equivalent)
- When you connect this printer to a computer with a USB cable, use a computer with manufacturer's guarantee of USB proper operation.
- This printer does not come with a USB cable. Have an appropriate one available for the computer you are using. Use a USB cable with the following symbol.

## 1 Make sure that the printer and computer are OFF.

## 2 Connect the B-type (square) end of the USB cable to the USB connector on the printer.

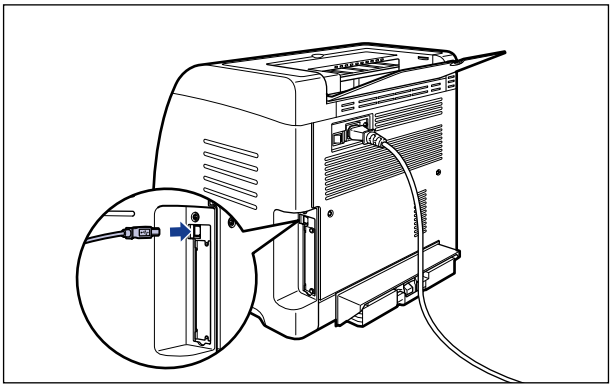

## 3 Connect the A-type (flat) end of the USB cable to the USB port on the computer.

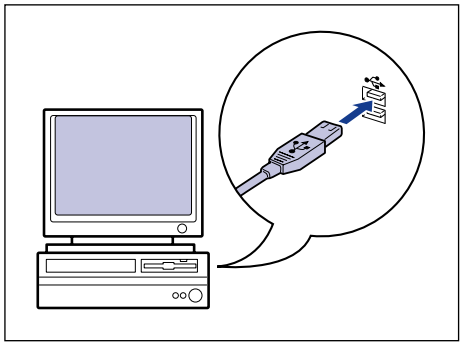

NOTE

- If a Wizard appears after connecting the USB cable by the Plug and Play automatic setup, install the software for this printer using either one of the following procedures. For more details, see "Installing the CAPT Software," on p. 4-4.
  - Click [Cancel] and install the software from CD-ROM Setup.
  - Install with Plug and Play.
- If you are not sure about the USB cable that is supported by the computer you are using, contact the store where you purchased the computer.

# Using a LAN Cable

If the optional network board (NB-C2) is installed, the printer can be connected to the network using a Category 5 twisted pair cable. Have cables or a hub ready as needed.

NOTE

- For details on the procedure for installing the network board, see "Network Board," on p. 8-18.
- If this printer is connected to a network, network settings will need to be configured, the printer will need to be installed as a network printer, and the print server will need to be configured. For details on these settings, see the instruction manual supplied with the network operating system or "Network Guide".

## ■ Network Environment

The optional network board supports 10BASE-T/100BASE-TX connections.

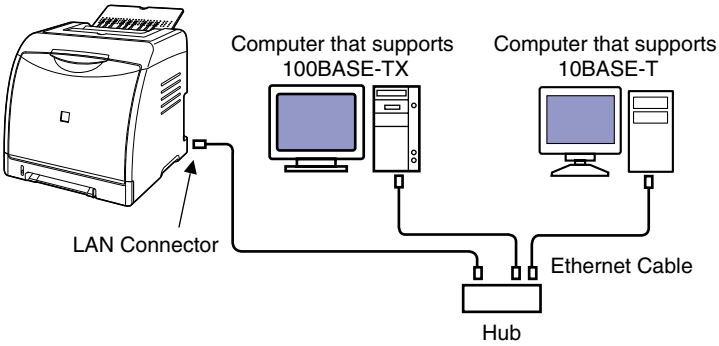


IMPORTANT

- The network board for this printer cannot be connected to networks other than those listed above.
- Make sure that there is a port available on the hub to which the printer will be connected. An additional hub must be installed if there is no free port.

NOTE

When connecting to the 100BASE-TX Ethernet network, all the devices to be connected to LAN, such as hub, LAN cable, and network board for computer, must support 100BASE-TX. For more details, contact your local authorized Canon dealer.

## 1 Connect the LAN cable to the LAN connector of the network board.

Connect a LAN cable that is compatible with the LAN connector of the network board according to the network.

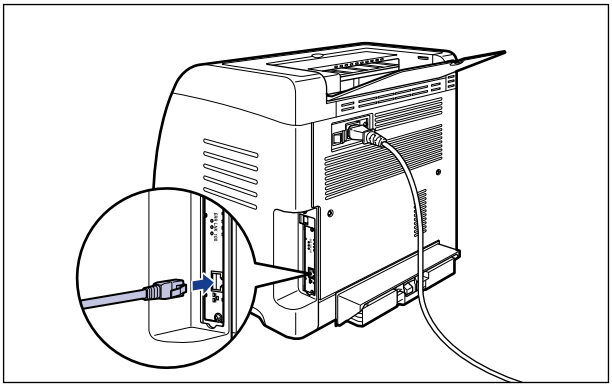

## 2 Connect the other end of the LAN cable to the hub.

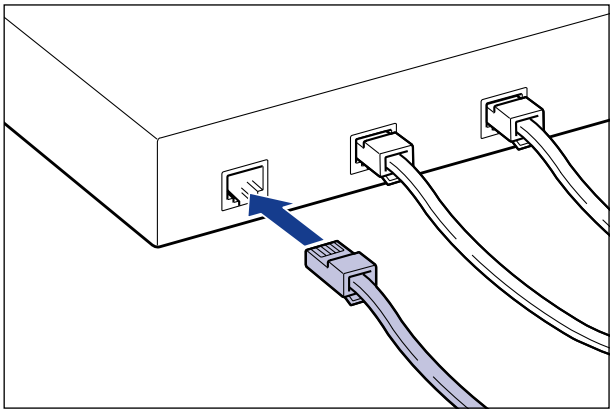

# Setting Up the Printing Environment

The following shows the tasks that should be performed after installing the printer:

## ■ Installing the printer driver

The printer driver is software required for printing from an application you use. Specify the print settings in the printer driver. The procedure for installing the printer driver varies depending on the system environment.

- When printing with the printer and computer connected with the USB cable (See p. 4-4)
- When printing with the optional network board installed, and the printer and the computer connected by a LAN cable (See Network Guide)

## ■ Sharing the printer on a network (See p. 4-55)

If you share this printer on a network and use it from a computer on the network, you must specify the settings for the computer and install the printer driver on the client computers.

# Turning the Printer ON/OFF

The power switch to turn the printer ON or OFF is located on the back of the printer. Be sure to observe the following instructions in order to prevent unexpected problems.

## Turning the Printer ON

In order to use this printer, you should press "I" of the power switch to turn the printer ON. After running a self-diagnostic test on the printer unit and optional accessories, the printer will be ready to print.

IMPORTANT

- Do not turn the power ON immediately after turning it OFF. If you want to turn the printer ON again after turning it OFF, wait at least 10 seconds after turning the printer OFF before turning it ON again.
- If the printer does not operate properly, or an error message appears in the Printer Status Window, see "Troubleshooting," on p. 7-1.
- When turning the power ON, make sure that no paper is loaded in the manual feed slot. If the power is turned ON when any paper is loaded in the manual feed slot, this may result in paper jams.
- Although a sheet of blank paper is output when you turn the power ON for the first time after you install the printer, this is not an error.

**1** **Press "I" of the power switch on the printer.**

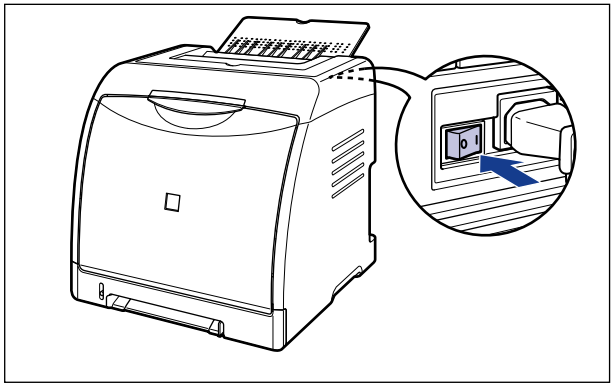

All the indicators on the printer blink, and the printer initiates a self-diagnostic test on the printer unit and optional accessories.
If no abnormality is found during the self-diagnostic test, the ○ (Ready) indicator (green) comes on after blinking, and the printer is ready to print.

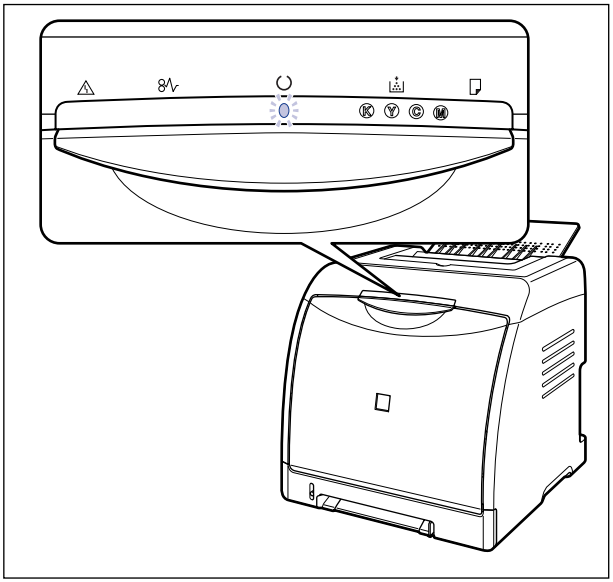



## Turning the Printer OFF

Turn the printer OFF using the following procedure.

IMPORTANT

- If the printer is used on a network, make sure that it is not printing data from another computer before turning the power OFF.
- If you turn the printer OFF, all print data remaining in the printer memory will be erased. So, wait for the necessary print data to be printed before turning the power OFF.
- Do not turn the power OFF when the printer is in any of the following status:
  - While the printer is in the middle of printing
  - While the printer is running a self-diagnostic test immediately after turning the power ON

### 1 Press "○" of the power switch on the printer.

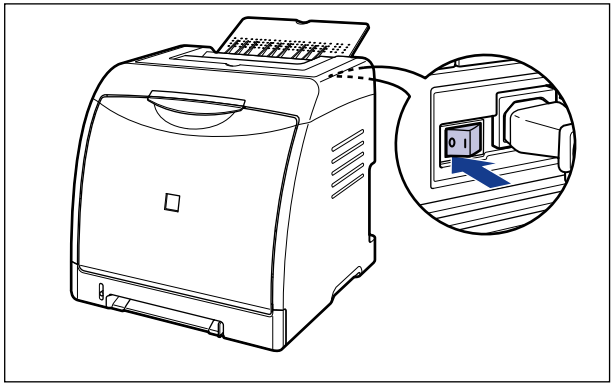

## Power Saving (Sleep Mode)

You can reduce power consumption efficiently by using the sleep mode when the printer is idle or not in use. Use the sleep mode using the following procedure.

IMPORTANT

- While "◯" of the power switch located on the back of the printer is pressed, the power consumption is 0 W.
- Since calibration is not performed automatically during the sleep state, you may not obtain appropriate printout results when printing immediately after the sleep state is released. In this case, perform calibration manually "Calibrating the Printer" (See p. 6-16).

NOTE

- You can select [5], [10], [15], [30], [60], [90], [120], [150], or [180] minutes for [Time to Enter Sleep Mode]. The default value is [30] minutes. You can also configure the printer not to enter the sleep mode.
- The sleep mode is cleared in the following circumstances:
  - Printing is performed
  - Calibration is performed
  - Cleaning is performed

### 1 Display the Printer Status Window.

For details on methods for displaying the Printer Status Window, see "Displaying the Printer Status Window," on p. 5-92.

## 2 From the [Options] menu in the Printer Status Window, select [Device Settings] → [Sleep Settings].

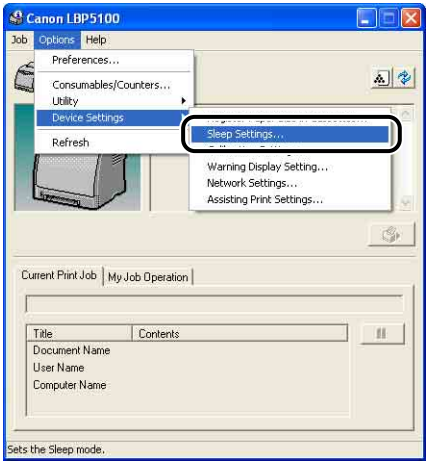


## 3 Select the [Use Sleep Mode] check box in the [Sleep Settings] dialog box to specify the time to switch to the sleep mode in [Time to Enter Sleep Mode].

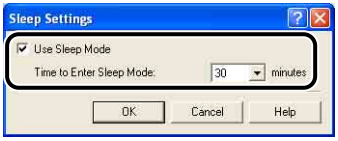


## 4 Click [OK].

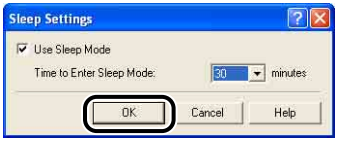

# Loading and Outputting Paper

3
CHAPTER

This chapter describes the types of paper that can be used with this printer, and how to load and output paper.


Paper Requirements . . . . . 3-2
- Usable Paper . . . . . 3-2
- Printable Area . . . . . 3-6
- Unusable Paper . . . . . 3-7
- Storing Paper . . . . . 3-8
- Storing Printouts . . . . . 3-9

Paper Source . . . . . 3-10
- Paper Source Type . . . . . 3-10
- Paper Capacity of Paper Source . . . . . 3-11
- Selecting a Paper Source . . . . . 3-12
- Precautions for Handling the Manual Feed Slot or Paper Cassette . . . . . 3-13

Output Tray . . . . . 3-15
- Output Tray . . . . . 3-15
- Paper Capacity of the Output Tray . . . . . 3-16

Loading Plain Paper, Heavy Paper, Transparencies, or Labels in the Paper Source . . . 3-17
- Loading Paper in the Paper Cassette . . . . . 3-17
- Loading Paper in the Manual Feed Slot . . . . . 3-26

Loading Index Card Size Media in the Paper Source . . . . . 3-29
- Loading Index Card Size Media in the Paper Cassette . . . . . 3-29
- Loading Index Card Size Media in the Manual Feed Slot . . . . . 3-37

Loading Envelopes in the Paper Source . . . . . 3-40
- Loading Envelopes in the Paper Cassette . . . . . 3-40
- Loading an Envelope in the Manual Feed Slot . . . . . 3-48

Loading Custom Size Paper (Non-Standard Paper) or Paper at a Size of Statement, Foolscap, or 16K in the Paper Source . . 3-51
- Loading Custom Size Paper or Paper at a Size of Statement, Foolscap, or 16K in the Paper Cassette . . 3-52
- Loading Custom Size Paper or Paper at a Size of Statement, Foolscap, or 16K in the Manual Feed Slot . . . . 3-60
- Registering a Custom Paper Size (Non-Standard Paper) . . . . . 3-62

Setting Up the Printer Driver and Printing . . . . . 3-65

2-sided Printing . . . . . 3-72

# Paper Requirements

## Usable Paper

To ensure optimum performance, use only paper that falls within the specifications in the following lists. Using inappropriate paper may result in deterioration in print quality or paper jams.

IMPORTANT

- Print speed may drop depending on the settings for the paper size, paper type, and print copies. When printing heavy paper, transparencies, labels, or envelopes, the print speed may be as slow as approximately 2 pages/min.
- When continuously printing the paper of 195.0 mm wide or less, the safety function that prevents damages caused by heat may slow the print speed down in stages. (The print speed may be as slow as approximately 2 pages/min.)

### Paper Size

The following shows the paper sizes that can be used with this printer. The symbol "●" indicates that the paper is available for the 1-sided printing and automatic 2-sided printing; the symbol "○" indicates that the paper is available for only 1-sided printing.

| Paper Size | Paper Source | | |
|---|---|---|---|
| | Manual Feed Slot | Cassette 1 | Cassette 2 (Optional) |
| A4 | ● | ● | ● |
| B5 | ○ | ○ | ○ |
| A5 | ○ | ○ | ○ |
| Legal | ● | ● | ● |
| Letter | ● | ● | ● |
| Executive | ○ | ○ | ○ |
| Statement | ○ | ○ | ○ |
| Foolscap | ● | ● | ● |
| 16K | ○ | ○ | ○ |

| Paper Size | Paper Source | | |
|---|---|---|---|
| | Manual Feed Slot | Cassette 1 | Cassette 2 (Optional) |
| Custom Paper Size | ○ | ○ | ○ |
| Envelope | ○ | ○ | ○ |
| Envelope DL 110.0 mm x 220.0 mm | ○ | ○ | ○ |
| Envelope COM10 104.9 mm x 241.3 mm | ○ | ○ | ○ |
| Envelope C5 162.0 mm x 229.0 mm | ○ | ○ | ○ |
| Envelope Monarch 98.5 mm x 190.5 mm | ○ | ○ | ○ |
| Envelope B5 176.0 mm x 250.0 mm | ○ | ○ | ○ |
| Index Card 76.2 mm x 127.0 mm | ○ | ○ | ○ |

## Paper Type

The following shows the paper types that can be used with this printer. The symbol "●" indicates that the paper is available for the 1-sided printing and automatic 2-sided printing; the symbol "○" indicates that the paper is available for only 1-sided printing.

| Paper Type | | Printer Driver Setting | Paper Source | | |
|---|---|---|---|---|---|
| | | | Manual Feed Slot | Cassette 1 | Cassette 2 (Optional) |
| Plain paper | 60 - 74 g/m$^2$ | [Plain Paper L] | ● | ● | ● |
| | 75 - 90 g/m$^2$ | [Plain Paper] | ● | ● | ● |
| Heavy paper | 91 - 120 g/m$^2$ | [Heavy Paper 1] | ●*1 | ●*1*2 | ●*1*2 |
| | 121 - 163 g/m$^2$ | [Heavy Paper 2] | ○ | ○*2 | ○*2 |
| Transparency (Black and white printing only) | | [Transparency] | ○ | ○*2 | ○*2 |
| Label | | [Label] | ○ | ○*2 | ○*2 |
| Envelope | | *3 | ○ | ○ | ○ |

*1 You cannot perform automatic 2-sided printing on heavy paper that weighs between 106 and 120 g/m$^2$.

*2 When printing heavy paper, transparencies, or labels from the paper cassette, select [Cassette 1] or [Cassette 2] in [Paper Source] in the [Paper Source] sheet. When [Auto] is selected, paper cannot be fed from the paper cassette.

*3 When printing envelopes, the printer automatically applies the appropriate print mode to the envelope type by specifying [Output Size] in the [Page Setup] sheet.
Set [Paper Type] to [Envelope L] when the flaps of envelopes stick to the body on printing with [Paper Type] set to [Envelope].

## ■ Plain Paper

This printer can print plain paper that is 76.2 to 215.9 mm wide, 127.0 to 355.6 mm long, and that weighs between 60 and 90 g/m$^2$, including the standard paper sizes: A4, B5, A5, Legal, Letter, Executive, Statement, Foolscap, and 16K. Also, paper at a size of A4, Legal, Letter, or Foolscap is available for automatic 2-sided printing.

## ■ Heavy Paper

This printer can print heavy paper that is 76.2 to 215.9 mm wide, 127.0 to 355.6 mm long, and that weighs between 91 and 163 g/m$^2$, including the standard paper sizes: A4, B5, A5, Legal, Letter, Executive, Statement, Foolscap, and 16K. Also, heavy paper at a size of A4, Legal, Letter, or Foolscap that weighs between 91 and 105 g/m$^2$ is available for automatic 2-sided printing.

IMPORTANT

Printing speed drops when printing heavy paper.

## ■ Transparency

This printer can print A4 and Letter size transparencies.

IMPORTANT

- Transparencies can only be printed in black and white.
- Thoroughly fan the transparencies before loading them as they may stick to each other.
- Printing speed drops when printing transparencies.

## ■ Label

This printer can print A4 and Letter size labels.

IMPORTANT

- Do not use the labels in the following conditions. Using inappropriate labels may result in paper jams that are difficult to clear or may result in damage to the printer.
  - Peeled labels or partly used labels
  - Coated labels that are easily peeled off from the backing sheet
  - Labels with uneven adhesive
- Printing speed drops when printing labels.

## ■ Index Card

This printer can print Index Card size media.

## ■ Envelope

The envelopes that can be used with this printer are as follows:

Envelope DL
(110.0 mm x 220.0 mm)

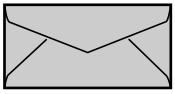

Envelope Monarch
(98.5 mm x 190.5 mm)

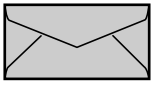

Envelope B5
(176.0 mm x 250.0 mm)

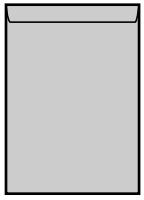

Envelope COM10
(104.9 mm x 241.3 mm)

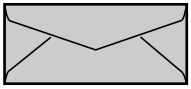

Envelope C5
(162.0 mm x 229.0 mm)

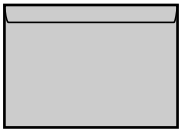

*You cannot use envelopes at sizes of DL, COM 10, Monarch, and C5 that have a flap on the short edge.

### IMPORTANT

- Do not use the following types of envelopes. Using inappropriate envelopes may result in paper jams that are difficult to clear or may result in damage to the printer.
  - Envelopes with fasteners or snaps
  - Envelopes with address windows
  - Envelopes with adhesive on the surface
  - Wrinkled or creased envelopes
  - Poorly manufactured envelopes in which the glued parts are uneven
  - Irregularly-shaped envelopes
- Before loading the envelopes, flatten the stack of envelopes to release any remaining air, and press the fold lines along the edges tight.
- Do not print on the reverse side (glued side) of envelopes.
- When loading envelopes at sizes of DL, COM10, C5, or Monarch, load them so that the flap is toward the right of the printer when viewed from the front.
  ( ⬅ : Feeding direction)

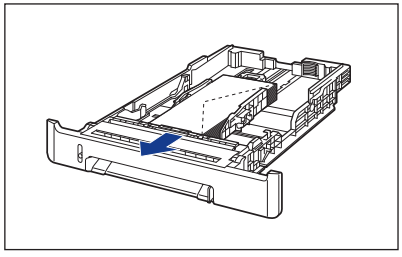

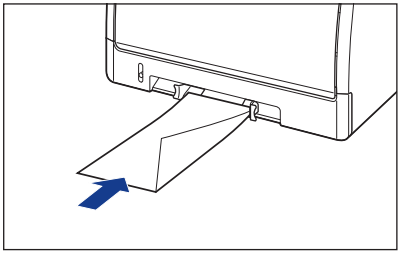

- When printing envelopes of the Envelope B5 size, close the flaps and load them so that the envelopes are printed from the top(the edge with the flap).
  ( ⬅: Feeding direction)

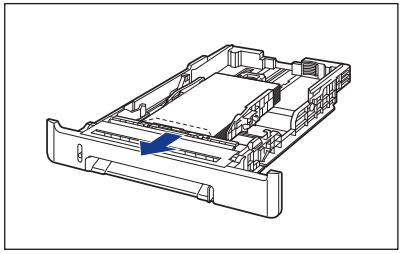

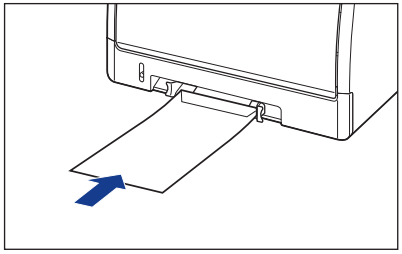

- Printing speed drops when printing envelops.

NOTE

When printing envelopes, they may be creased.

### Abbreviations of Paper Sizes

The following shows the abbreviations of paper sizes that are marked on the paper cassette.

| Paper Size | Paper Guides |
|---|---|
| Letter | LTR |
| Executive | EXEC |

## Printable Area

The following shows the printable area of this printer: If you have selected the [Print with Upper Left of Sheet as Starting Point] check box in the [Finishing Details] dialog box in the printer driver, you can extend the printable area to near the edges of the paper. However, the edge of paper may be missing partly, or optimum print quality may not be obtained depending on the print data to be printed. For more details, see Online Help in the printer driver.

### ■ Plain Paper/Heavy Paper/Transparency/Label

You cannot print on any area within 5 mm of the edges of paper.

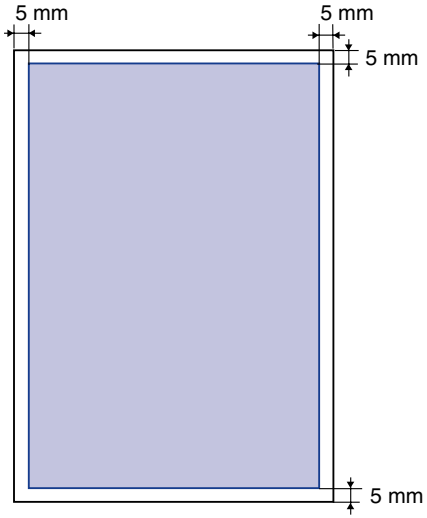


### ■ Envelope

You cannot print on any area within 10 mm of the edges of an envelope.
You may have to change the printable area before printing, depending on the application you use.

(Sample: Envelope COM10)

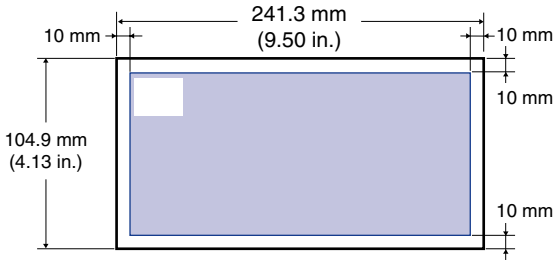


## Unusable Paper

To avoid problems such as paper jams and other malfunctions, the following types of paper should never be used:

IMPORTANT

- Paper that jams easily
  - Paper that is too thick or too thin
  - Irregularly-shaped paper
  - Wet or moist paper

- Torn or damaged paper
- Rough, extremely smooth, or glossy paper
- Paper with binding holes or perforations
- Curled or creased paper
- Specially coated paper (coated paper for ink jet printers, etc.)
- Labels with backing sheet that is easily peeled off
- Paper that has already been printed by a copy machine or another laser printer (The reverse side of the paper is also unusable.)
- Paper with jagged edges
- Wrinkled paper
- Paper with the corners folded

• Paper that changes its quality at a high temperature
- Paper that contains ink that melts, burns, evaporates or emits harmful gases at the heating temperature (approx. 180°C or 356°F) of the fixing unit
- Heat-sensitive paper
- Treated color paper
- Specially coated paper (coated paper for ink jet printers, etc.)
- Paper with adhesive on the surface

• Paper that causes printer malfunctions or damages the printer
- Carbon paper
- Paper with staples, clips, ribbons or tapes
- Paper that has already been printed by a copy machine or another laser printer (The reverse side of the paper is also unusable.)

• Paper that is difficult for the toner to fix onto
- Paper with rough surfaces
- Specially coated paper (coated paper for ink jet printers, etc.)
- Paper containing thick fibers



## Storing Paper

The quality of paper may deteriorate if it is stored improperly even when the paper meets the normal specifications. Inferior paper may cause misfeeds, paper jams, or deterioration in print quality.
Observe the following guidelines when storing and handling paper:

IMPORTANT

- Store paper away from moisture since paper quality deteriorates in a moist environment.
- Paper wrappers help avoiding moisture and dryness. Keep paper in the wrapper until it is ready to be used. Store all unused paper in a wrapper.
- Store paper on a flat surface.
- Do not store paper on the floor where water and moisture can accumulate.
- Avoid physical damage to stored paper.
- Do not store paper vertically or store too many stacks of paper in one pile.
- Do not store paper in places exposed to direct sunlight or places with high or low humidity.

- If the paper storage room and work area differ from each other significantly in temperature or humidity, keep packed paper stack in the work area for at least one day prior to printing so that it can adapt to the new environment. When paper is moved to a location where the temperature or humidity differs significantly, the paper may curl or become creased.

## Storing Printouts

When handling or storing printouts printed by this printer, be careful of the following points:

IMPORTANT

- Avoid storing printouts with PVC materials such as clear folders. Otherwise toner may melt and stick to the PVC material.
- Use insoluble adhesive when gluing printouts. Toner may melt when soluble adhesive is used. Before using the adhesive, test it with paper that is no longer required.
  Make sure that the printed paper is completely dry before placing one over another. Toner may melt if they are placed together half-dried.
- Store paper on a flat surface. Toner may peel when they are folded or creased.
- Avoid storing printouts at high temperatures. Otherwise toner may melt and blot.
- Put printouts in a binder when storing them for a long period of time (two years or longer). (Printouts may discolor when they are stored for a long period of time.)

# Paper Source

This printer is supplied with two paper sources: the paper cassette (Cassette 1) and manual feed slot. By installing the optional paper feeder (Cassette 2), up to 3 paper sources can be used.



● **Paper Level Indicator**

The paper cassette has a paper level indicator (A) that shows the amount of paper remaining in the cassette. If the cassette is full, the paper level indicator is at the top. Because the indicator moves down as the amount of paper drops, this gives a rough estimate of the amount of paper remaining.

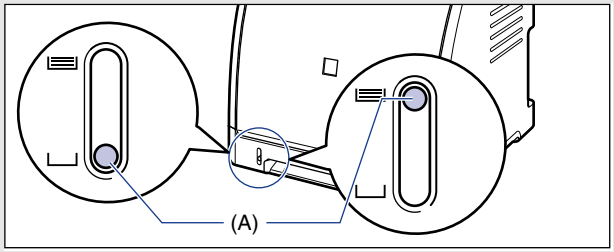


## Paper Source Type

This printer has the following paper sources:

(A): Manual Feed Slot
(B): Cassette 1
(C): Cassette 2 (Optional)

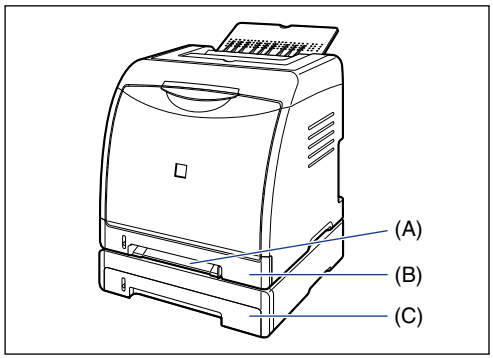

IMPORTANT

If you are printing from Cassette 2, make sure that Cassette 1 is set before printing. If you print from Cassette 2 when Cassette 1 is not set, this will cause paper jams.

## Paper Capacity of Paper Source

| Paper Type | Paper Source | | |
|---|---|---|---|
| | Manual Feed Slot | Cassette 1 | Cassette 2 (Optional) |
| Plain paper (64 g/m$^2$) | 1 sheet | Approx. 250 sheets | Approx. 250 sheets |
| Heavy paper (128 g/m$^2$) | 1 sheet | Approx. 170 sheets | Approx. 170 sheets |
| Transparency (Black and white printing only) | 1 sheet | Approx. 50 sheets | Approx. 50 sheets |
| Label | 1 sheet | Approx. 100 sheets | Approx. 100 sheets |
| Envelope | 1 sheet | Approx. 10 sheets | Approx. 10 sheets |

# Selecting a Paper Source

A paper source can be selected in the [Paper Source] sheet in the printer driver.

## 1 Display the [Paper Source] sheet and specify the paper source.

For details on the procedure for displaying the [Paper Source] sheet in the printer driver, see "Specifying the Printing Preferences," on p. 5-9.

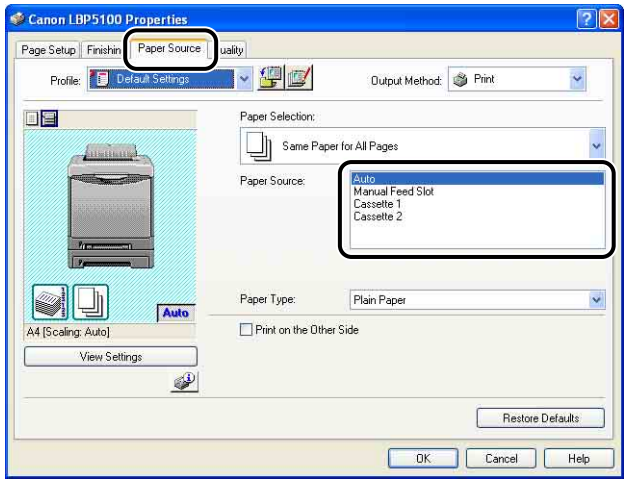


## 2 Specify the following options as needed.

| Setting | Setting Value | Description |
|---|---|---|
| [Paper Selection] | [Same Paper for All Pages] | Feeds all the pages from the same paper source. |
| | [Different for First, Others, and Last] | Paper can be selected for each page, such as for printing the front cover on a different type of paper. |
| | [Different for First, Second, Others, and Last] | |
| | [Different for Cover and Others] | |

| Setting | Setting Value | Description |
|---|---|---|
| [Paper Source] | [Auto]<br>[Manual Feed Slot]<br>[Cassette 1]<br>[Cassette 2]* | Select a paper source. Options to be specified differ depending on the setting for [Paper Selection].<br>When printing heavy paper, transparencies, or labels from the paper cassette, select [Cassette 1] or [Cassette 2]. When [Auto] is selected, paper cannot be fed from the paper cassette. |
| [First Page] | | |
| [Second Page] | | |
| [Other Pages] | | |
| [Cover Page] | | |
| [Last Page] | | |
| [Paper Type] | [Plain Paper]<br>[Plain Paper L]<br>[Heavy Paper 1]<br>[Heavy Paper 2]<br>[Transparency]<br>[Label]<br>[Envelope]<br>[Envelope L] | Specify the type of paper. (See p. 3-3) |
| [Print on the Other Side] | - | It is not recommended to print the other side of paper previously printed by this printer. However, if you have to print on both sides of paper, select the [Print on the Other Side] check box when printing the other side of the previously printed paper. |

* This option can be specified only when the optional paper feeder is installed.

**3** **Confirm the settings, then click [OK].**

## Precautions for Handling the Manual Feed Slot or Paper Cassette

Be careful of the following points when handling the manual feed slot or paper cassette.

IMPORTANT

- When any paper is in the manual feed slot, you cannot feed paper from the paper cassette. If you are printing from the paper cassette, remove any paper loaded in the manual feed slot.
- Do not pull out the paper cassette while the printer is printing. This may result in paper jams or damage to the printer.

- Do not touch the paper in the manual feed slot or pull it out during printing. This may result in a faulty operation.
- Refill the paper cassette after all the loaded paper runs out. If the cassette is refilled when paper still remains in the cassette, it may result in misfeeds.
- Do not load paper in the manual feed slot during printing from the paper cassette. This may result in multiple sheets of paper fed at once or paper jams.
- Do not touch the black rubber pad (A) in the paper cassette. This may result in misfeeds.

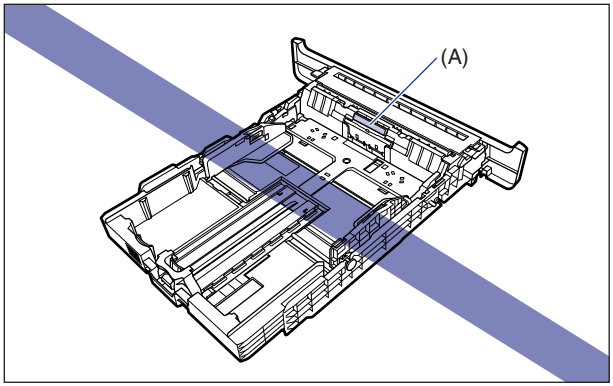


- If you are printing from Cassette 2, make sure that Cassette 1 is set before printing. If you print from Cassette 2 when Cassette 1 is not set, this will cause paper jams.

# Output Tray

## Output Tray

Printed paper is output to the output tray on the top of the printer unit with the printed side facing down. Printed paper is output in order of page.

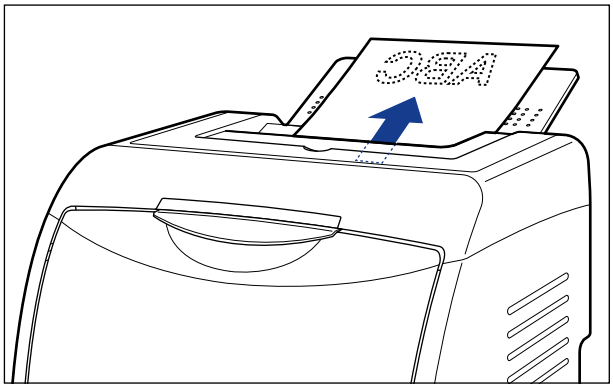

**CAUTION**

**Keep your hands or clothing away from the roller in the output area. Even if the printer is not printing, sudden rotation of the roller may catch your hands or clothing, resulting in personal injury.**

IMPORTANT

During 2-sided printing, do not touch the paper until it is output to the output tray completely. During 2-sided printing, the paper is once output partially after the front side is printed, and then it is fed again to be printed on the reverse side.

NOTE

Close the output tray to prevent dust from entering into the printer when you are not using it.

# Paper Capacity of the Output Tray

| Paper Type | Output Tray* |
|---|---|
| | Output Tray (Face-down) |
| Plain paper<br>(When plain paper that weighs 64 g/m$^2$ is used) | Approx. 125 sheets |
| Heavy paper<br>(When heavy paper that weighs 128 g/m$^2$ is used) | Approx. 50 sheets |
| Transparency<br>(Black and white printing only) | Approx. 10 sheets |
| Label | Approx. 10 sheets |
| Envelope | Approx. 10 sheets |

* Actual paper capacity varies depending on the installation environment or paper type.

# Loading Plain Paper, Heavy Paper, Transparencies, or Labels in the Paper Source

This section describes the procedure for loading plain paper, heavy paper, transparencies, or labels in the paper source.

The paper source that you can load paper is the paper cassette and manual feed slot. If you want to print continuously, load the paper in the paper cassette.
When printing only a sheet of paper that is different in size or type from the one loaded in the paper cassette, load the paper in the manual feed slot.

IMPORTANT

- For more details on the usable paper, see "Usable Paper," on p. 3-2.
- For details on handling the manual feed slot or paper cassette, see "Precautions for Handling the Manual Feed Slot or Paper Cassette," on p. 3-13.
- Transparencies can only be printed in black and white.

NOTE

For details on the procedure for printing custom size paper, see "Loading Custom Size Paper (Non-Standard Paper) or Paper at a Size of Statement, Foolscap, or 16K in the Paper Source," on p. 3-51.

## Loading Paper in the Paper Cassette

Load paper in the paper cassette using the following procedure.
Be sure to load paper in portrait orientation when loading it in the paper cassette.

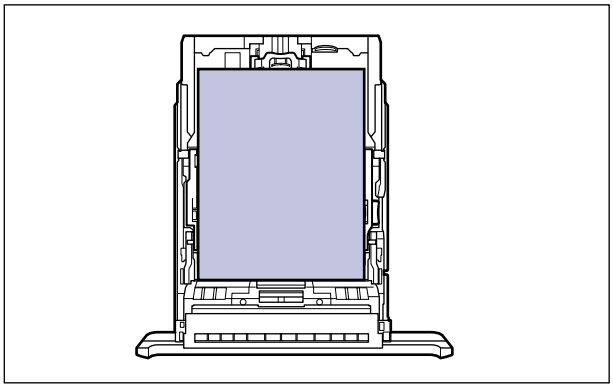

NOTE

Load paper in Cassette 2 (Only when the optional paper feeder is installed) in the same manner as you load paper in Cassette 1.

## 1 Pull out the paper cassette.

Pull out the paper cassette gently ①.

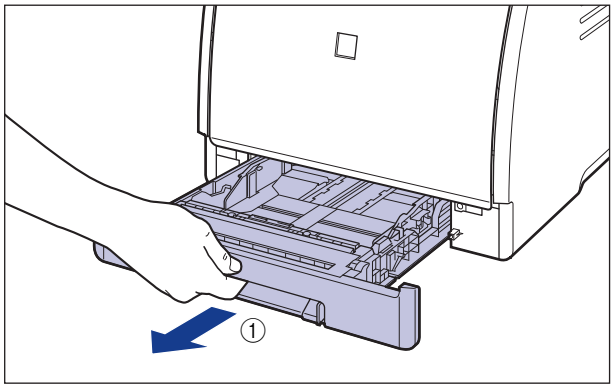


While holding the paper cassette with both hands, remove it from the printer unit as shown in the figure ②.

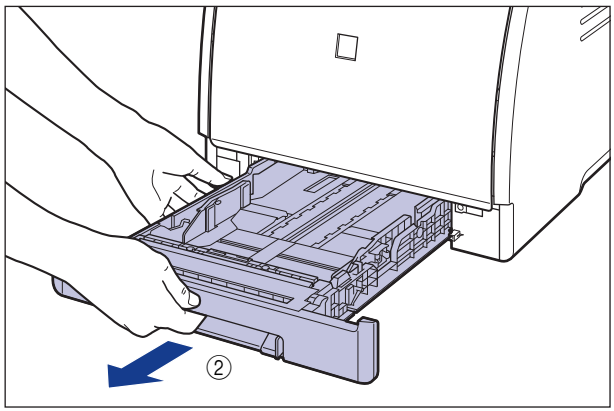


**CAUTION**

**Be sure to take the paper cassette out of the printer before loading paper. If paper is loaded while the paper cassette is partially pulled out, the paper cassette may drop or the printer may become damaged resulting in personal injury.**

## 2 When changing the size of the paper to be loaded, adjust the length of the paper cassette and change the positions of the paper guides.

- **When loading Legal size paper, adjust the length of the paper cassette while holding the lock release lever shown in the figure.**

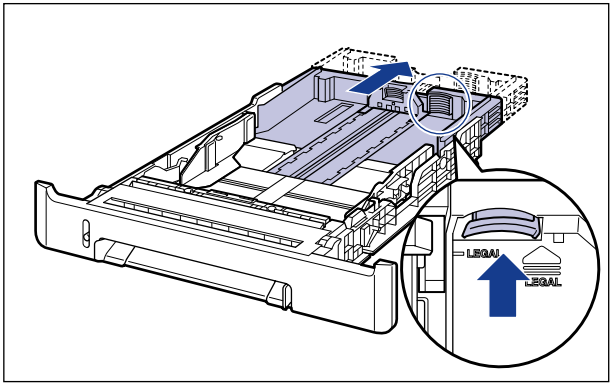


- **While holding the lock release lever of the side paper guides, slide the guides to the mark for the size of the paper to be loaded.**

  The side paper guides move together. Align the position of (A) with the mark for the size of the paper to be loaded.

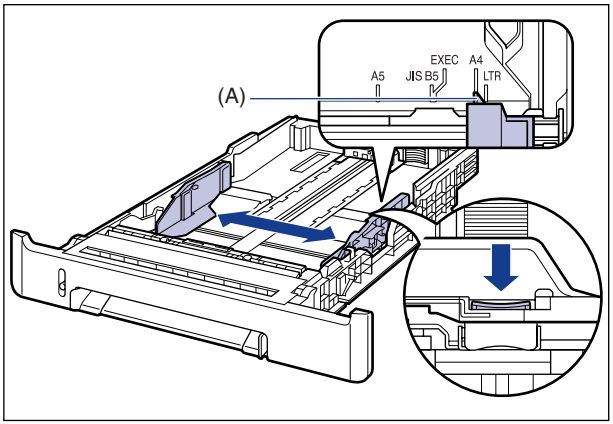

- **While holding the lock release lever of the rear paper guide, slide the guide to the size mark for the paper to be loaded.**

  Align the position of (A) with the mark for the size of the paper to be loaded.

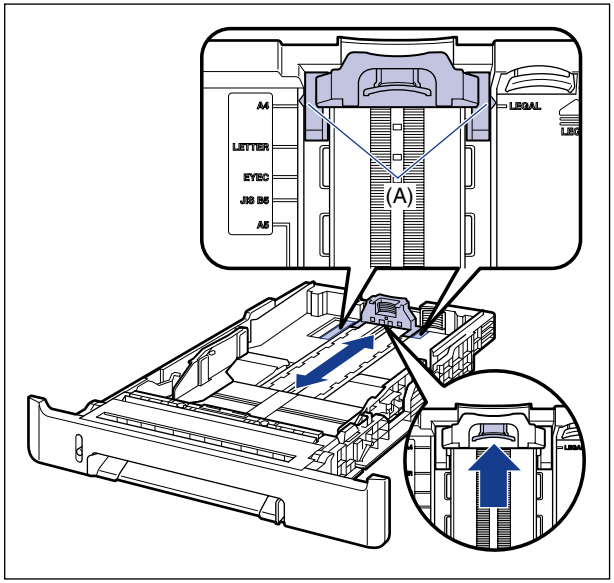


## 3 Before loading transparencies or labels, fan them in small batches and align the edges.

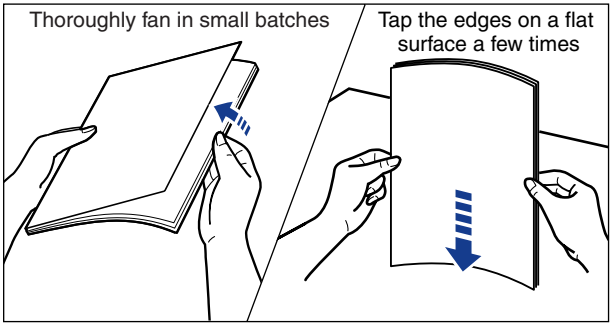


**CAUTION**

**Take care not to cut your hands with the edges of transparencies or labels.**

IMPORTANT

- Be sure to fan the transparencies or labels thoroughly before loading them. If they are not fanned enough, multiple sheets of paper may be fed at once, causing paper jams.

- When fanning or aligning the transparencies, try to hold the edges to avoid touching the printing surface.
- Take care not to mark or stain the printing surface of the transparencies with fingerprints, dust, or oil. This may result in poor print quality.

## 4 Load the paper stack so that the rear edge is aligned with the paper guide.

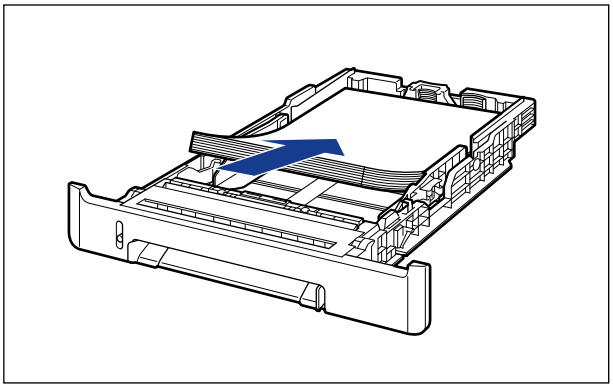

**CAUTION**

**When loading paper, take care not to cut your hands with the edges of the paper.**

IMPORTANT

- Be sure to check if the paper guide is at the position of the size of the loaded paper. If the paper guide is set at a wrong position, this may result in misfeeds.
- If you use paper that has been poorly cut, multiple sheets of paper may be fed at once. In this case, fan the paper thoroughly, and then align the edges of the stack on a hard, flat surface.

NOTE

To print letterhead paper or paper printed with a logo, load the paper so that the printing side is facing up, as shown in the following figure.
( ⬅: Feeding direction)

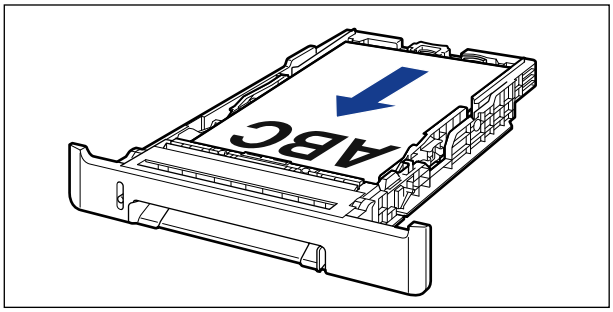


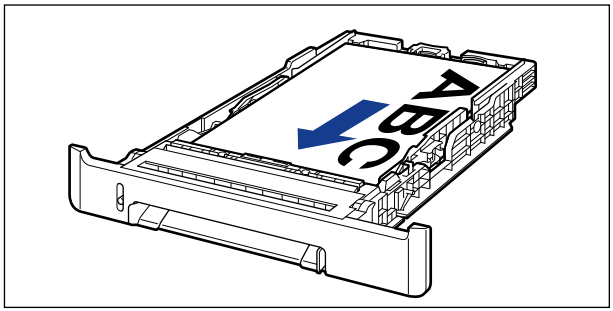

## 5 Hold down the paper as shown in the figure, make sure that the paper stack does not exceed the load limit marks (A), and then set it under the hooks (B) on the paper guides.

Make sure that there is sufficient space between the hooks of the paper guides and the paper stack. If there is no sufficient space, slightly reduce the amount of paper.

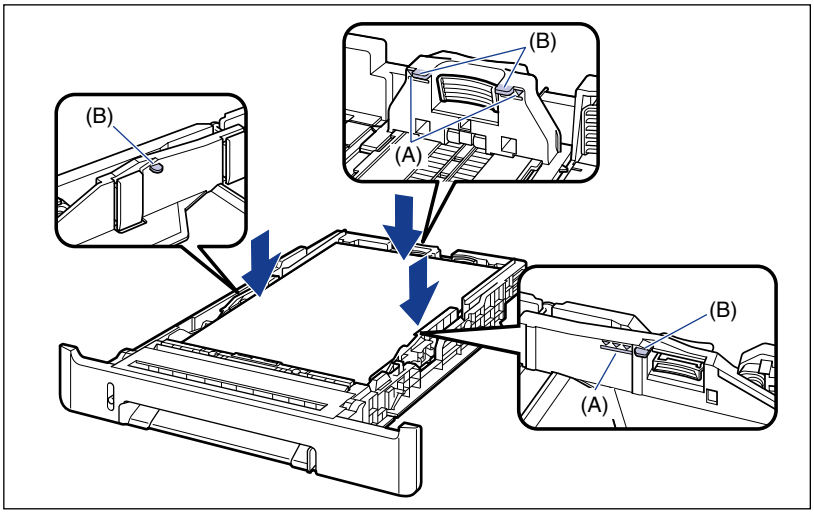


IMPORTANT

The following shows the paper capacity of the paper cassette. Be sure that the paper stack does not exceed the load limit marks. If the paper stack exceeds the load limit marks, this may result in misfeeds.

- Plain paper — Approx. 250 sheets (When plain paper that weighs 64 g/m$^2$ is used)
- Heavy paper — Approx. 170 sheets (When heavy paper that weighs 128 g/m$^2$ is used)
- Transparency — Approx. 50 sheets
- Label — Approx. 100 sheets

## 6 Set the paper cassette in the printer.

Push the paper cassette into the printer firmly until the front side of the paper cassette is flush with the front surface of the printer.

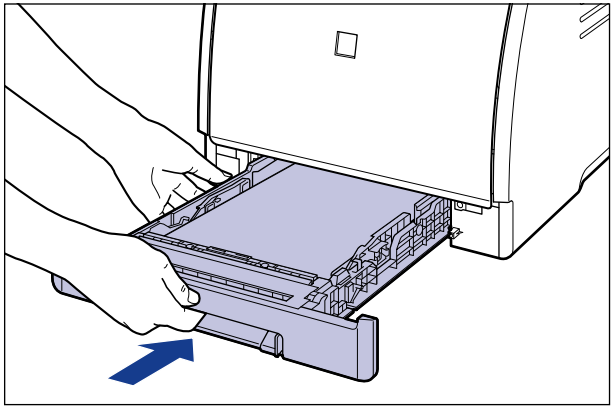

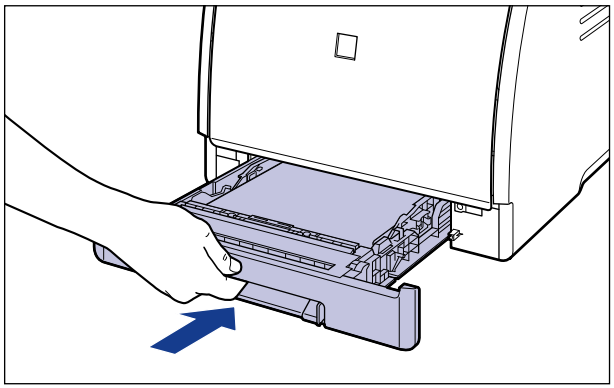

**CAUTION**

**When setting the paper cassette in the printer, be careful not to catch your fingers.**

## 7 Register the size of the loaded paper using the following procedure.

This printer's paper cassette cannot automatically detect the paper size. Therefore, you need to register the size of the loaded paper in the Printer Status Window.

## 8 Display the Printer Status Window.

For details on methods for displaying the Printer Status Window, see "Displaying the Printer Status Window," on p. 5-92.

## 9 From the [Options] menu, select [Device Settings] → [Register Paper Size in Cassettes].

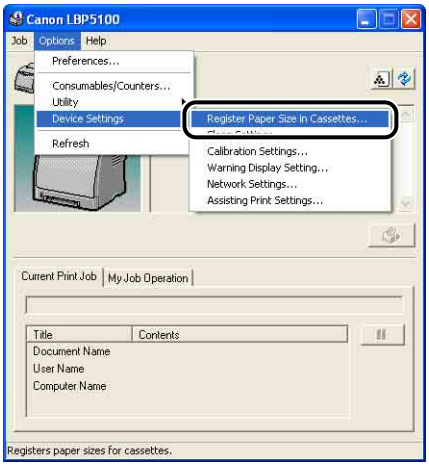


## 10 Select the size of the paper loaded in the paper cassette, then click [OK].

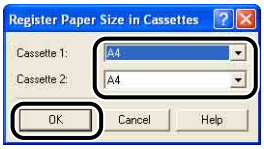


Next, configure the printer driver (See p. 3-65).

# Loading Paper in the Manual Feed Slot

Load paper in the manual feed slot using the following procedure.
Be sure to load paper in portrait orientation when loading it in the manual feed slot.

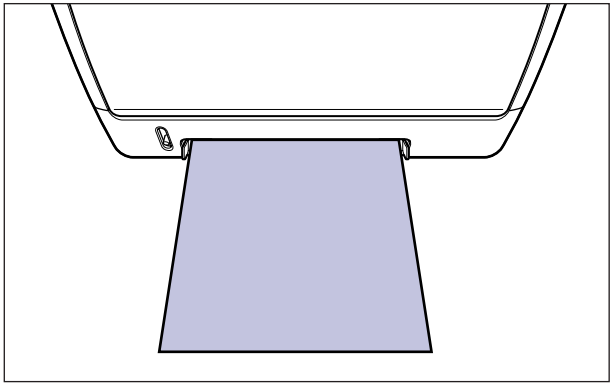

**1** **Adjust the paper guides to the width of the loaded paper as shown in the figure.**

The paper guides move together.

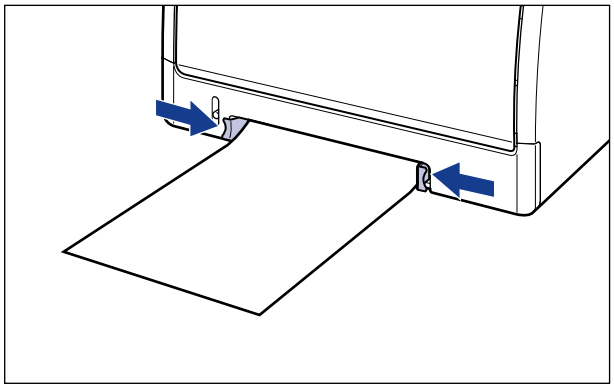

IMPORTANT

Be sure to align the paper guides with the width of the paper. If the paper guides are too loose or too tight, this may result in misfeeds or paper jams.

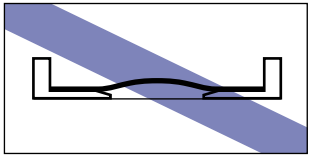

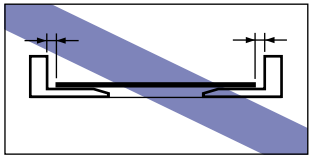

NOTE

To print letterhead paper or paper printed with a logo, load the paper so that the printing side is facing down, as shown in the following figure.
( ⬅ : Feeding direction)

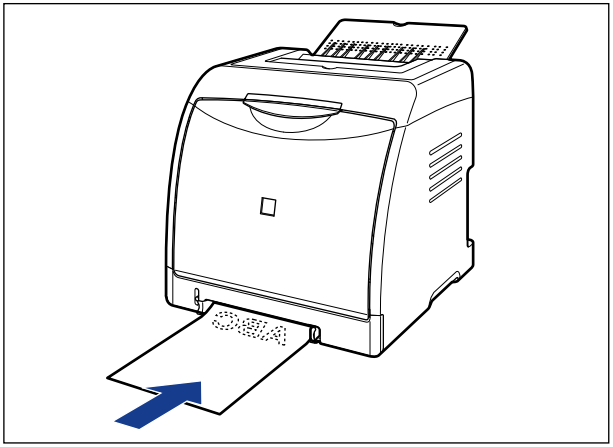

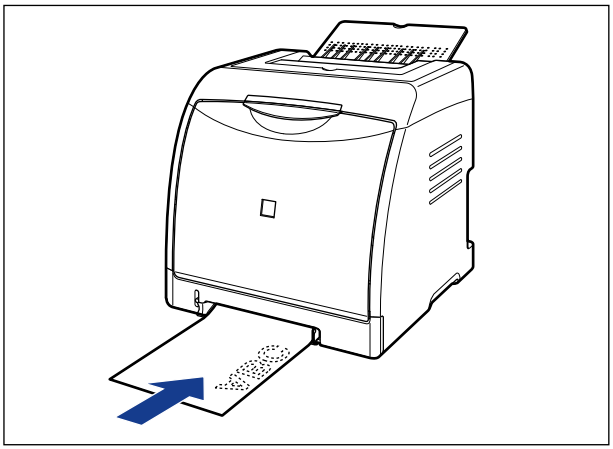

## 2 Gently insert the paper until it touches the back of the printer while supporting the paper with hands as shown in the figure.

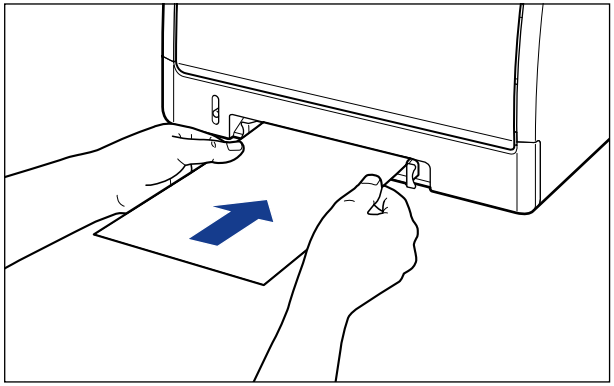

When the paper is loaded, it is sent into the slot a little.

**CAUTION**

**When loading paper, take care not to cut your hands with the edges of the paper.**

IMPORTANT

- Load the paper so that it is straight.
- If the paper is curled or folded at corners, flatten it before loading it in the printer.

Next, configure the printer driver (See p. 3-65).

# Loading Index Card Size Media in the Paper Source

This section describes the procedure for loading Index Card size media in the paper source.

The paper source that you can load Index Card size media is the paper cassette and manual feed slot. If you want to print continuously, load the Index Card size media in the paper cassette.
When printing only a sheet of paper that is different in size or type from the one loaded in the paper cassette, load the Index Card size media in the manual feed slot.

IMPORTANT

For details on handling the manual feed slot or paper cassette, see "Precautions for Handling the Manual Feed Slot or Paper Cassette," on p. 3-13.

## Loading Index Card Size Media in the Paper Cassette

Load Index Card size media in the paper cassette using the following procedure. Be sure to load Index Card size media in portrait orientation when loading it in the paper cassette.

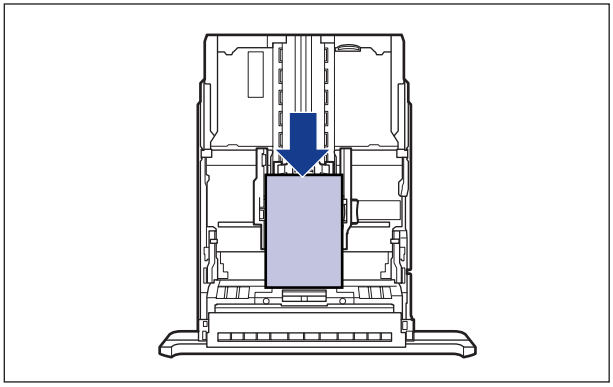

NOTE

Load Index Card size media in Cassette 2 (Only when the optional paper feeder is installed) in the same manner as you load Index Card size media in Cassette 1.

## 1 Pull out the paper cassette.

Pull out the paper cassette gently ①.

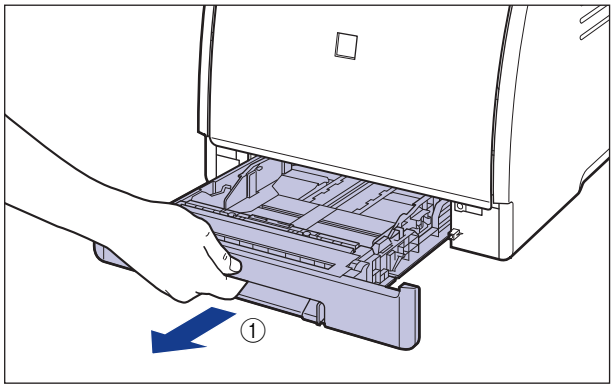


While holding the paper cassette with both hands, remove it from the printer unit as shown in the figure ②.

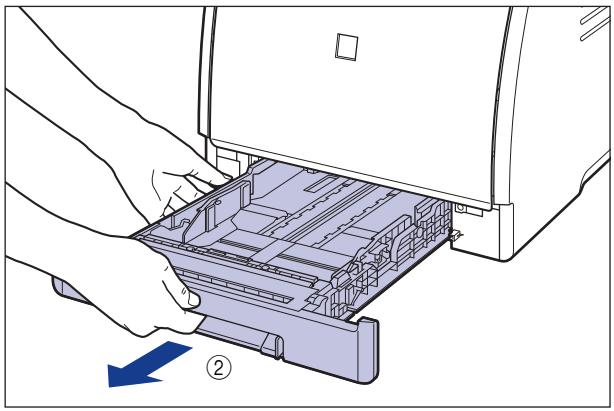


**CAUTION**

**Be sure to take the paper cassette out of the printer before loading paper. If paper is loaded while the paper cassette is partially pulled out, the paper cassette may drop or the printer may become damaged resulting in personal injury.**

## 2 Before loading labels of Index Card size, fan them in small batches and align the edges.

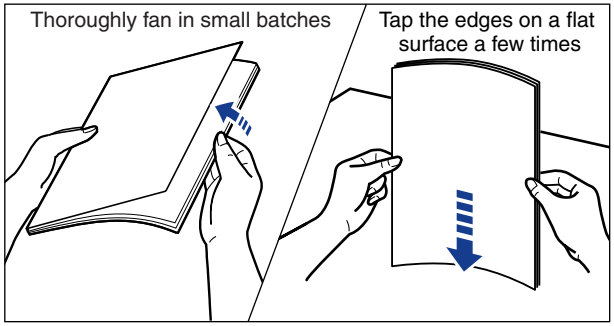


**CAUTION**

**Take care not to cut your hands with the edges of labels.**

IMPORTANT

Be sure to fan the labels thoroughly before loading them. If they are not fanned enough, multiple sheets of paper may be fed at once, causing paper jams.

## 3 Load the Index Card size media so that the edge of the media is aligned with the front side of the paper cassette.

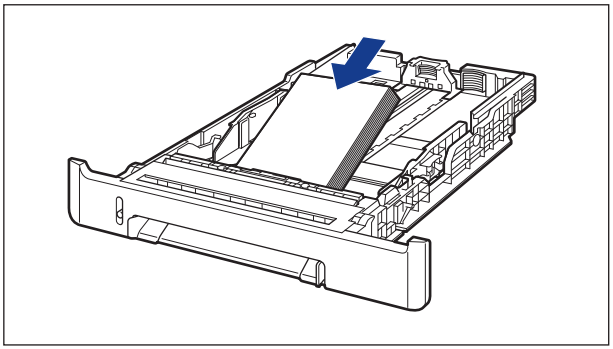

**CAUTION**

**When loading paper, take care not to cut your hands with the edges of the paper.**

IMPORTANT

If you use Index Card size media that has been poorly cut, multiple sheets of that may be fed at once. In this case, fan the Index Card size media thoroughly, and then align the edges of the stack on a hard, flat surface.

NOTE

To print letterhead paper or paper printed with a logo, load the paper so that the printing side is facing up, as shown in the following figure.
( ⬅: Feeding direction)

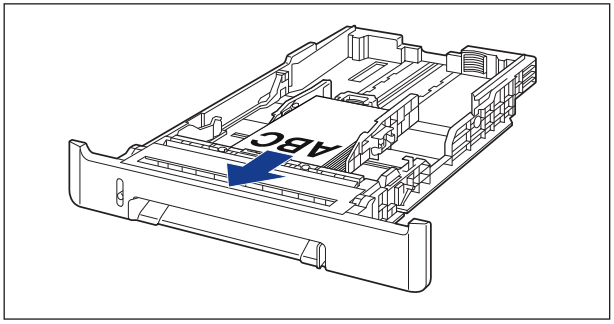


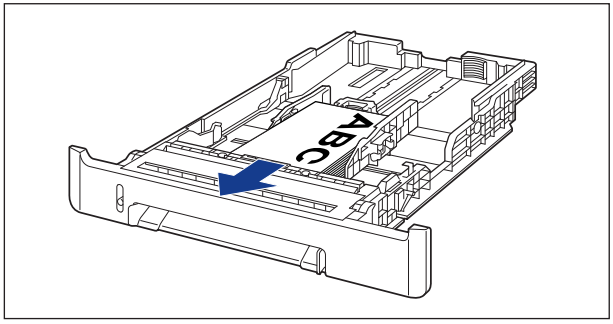


## 4 While holding the lock release lever of the side paper guides, slide the guides to the mark for the size of the loaded Index Card size media.

The side paper guides move together.

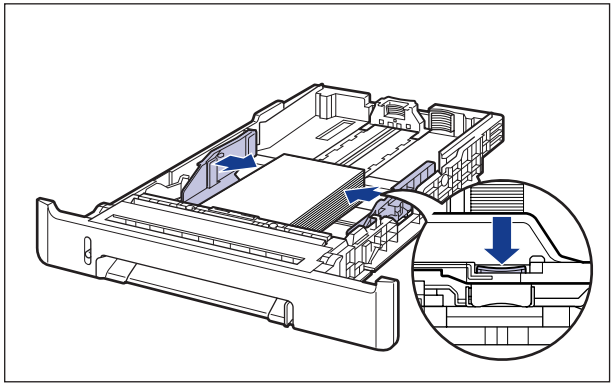

IMPORTANT

Be sure to align the paper guides with the width of the Index Card size media. If the paper guides are too loose or too tight, this may result in misfeeds or paper jams.

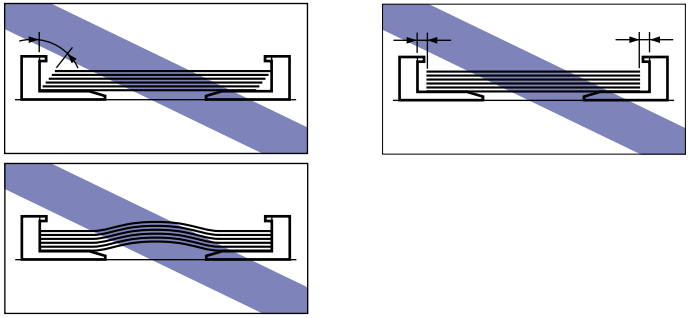

**5** **While holding the lock release lever of the rear paper guide, slide the guide to the size mark for the loaded Index Card size media.**

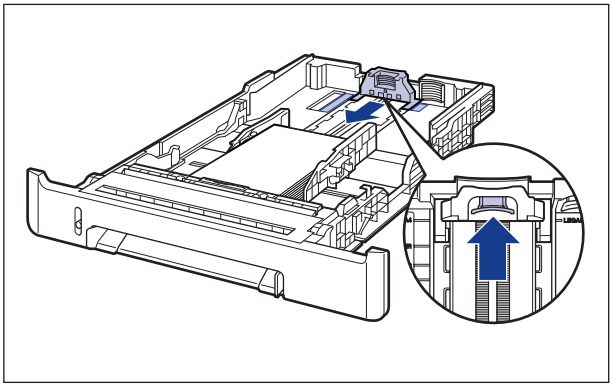

## 6 Hold down the Index Card size media as shown in the figure, make sure that the stack does not exceed the load limit marks (A), and then set it under the hooks (B) on the paper guides.

Make sure that there is sufficient space between the hooks of the paper guides and the stack of the Index Card size media. If there is no sufficient space, slightly reduce the amount of Index Card size media.

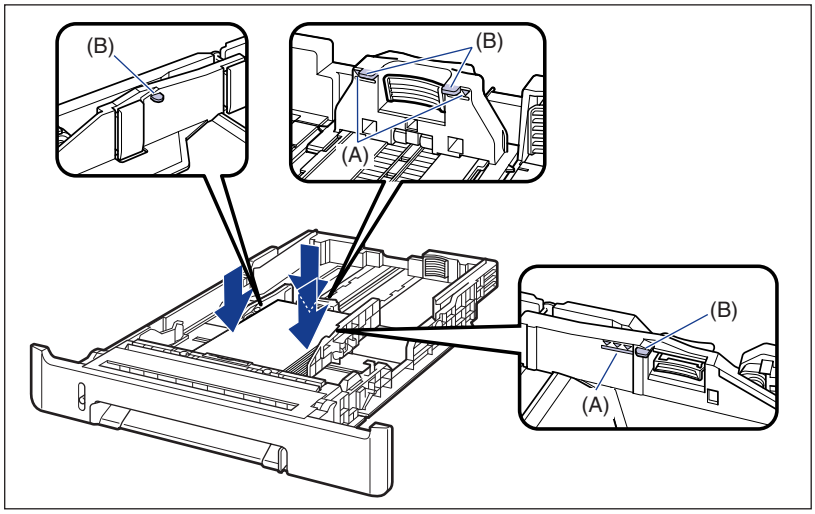


IMPORTANT

The following shows the paper capacity of the paper cassette. Be sure that the paper stack does not exceed the load limit marks. If the paper stack exceeds the load limit marks, this may result in misfeeds.

- Plain paper: Approx. 250 sheets (When plain paper that weighs 64 g/m$^2$ is used)
- Heavy paper: Approx. 170 sheets(When heavy paper that weighs 128 g/m$^2$ is used)
- Label: Approx. 100 sheets

## 7 Set the paper cassette in the printer.

Push the paper cassette into the printer firmly until the front side of the paper cassette is flush with the front surface of the printer.

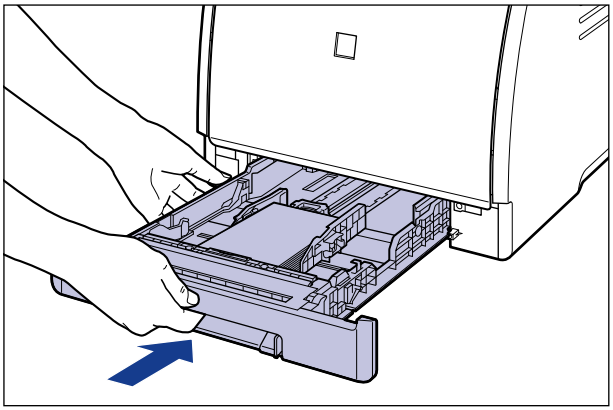

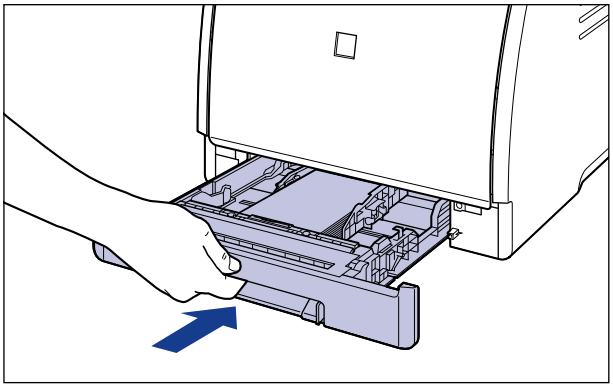

## 8 Register the size of the loaded paper using the following procedure.

This printer's paper cassette cannot automatically detect the paper size. Therefore, you need to register the size of the loaded paper.

## 9 Display the Printer Status Window.

For details on methods for displaying the Printer Status Window, see "Displaying the Printer Status Window," on p. 5-92.

## 10 From the [Options] menu, select [Device Settings] → [Register Paper Size in Cassettes].

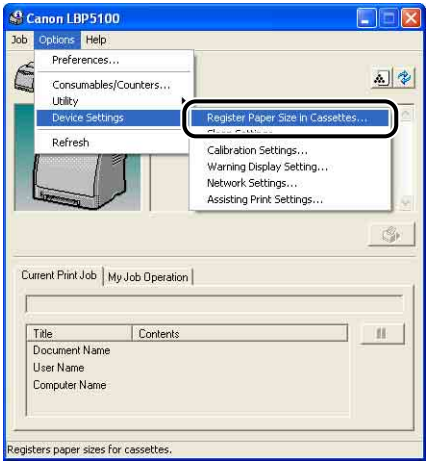


## 11 Select [Index Card], then click [OK].

Next, configure the printer driver (See p. 3-65).

# Loading Index Card Size Media in the Manual Feed Slot

Load Index Card size media in the manual feed slot using the following procedure. Be sure to load Index Card size media so that the printing side is facing down when loading it in the manual feed slot.

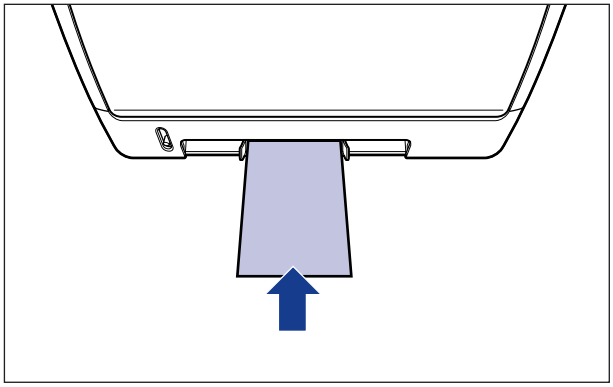

**1** **Adjust the paper guides to the width of the loaded Index Card size media as shown in the figure.**

The paper guides move together.

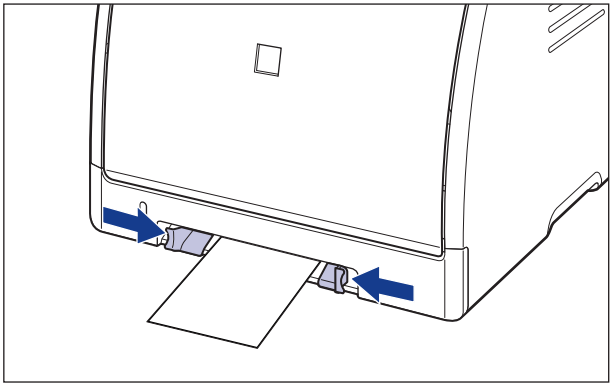

IMPORTANT

Be sure to align the paper guides with the width of the Index Card size media. If the paper guides are too loose or too tight, this may result in misfeeds or paper jams.

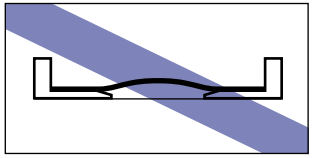

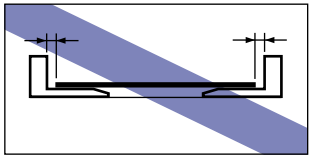

NOTE

To print letterhead paper or paper printed with a logo, load the paper so that the printing side is facing down, as shown in the following figure.
( ⬅ : Feeding direction)

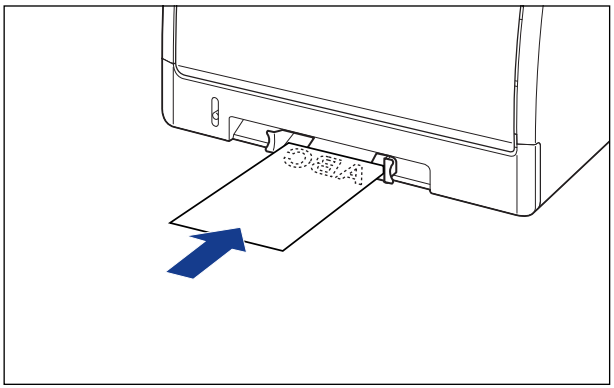

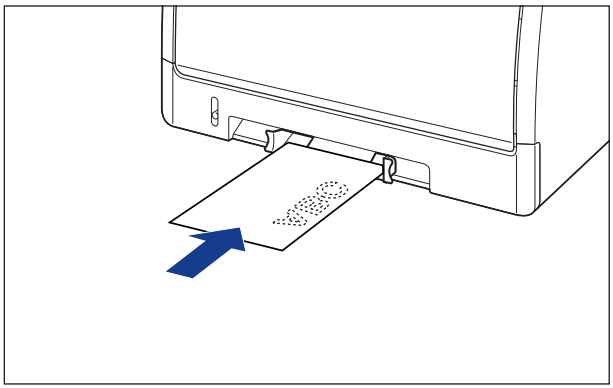

## 2 Gently insert the paper until it touches the back of the printer while supporting the Index Card size media with hands as shown in the figure.

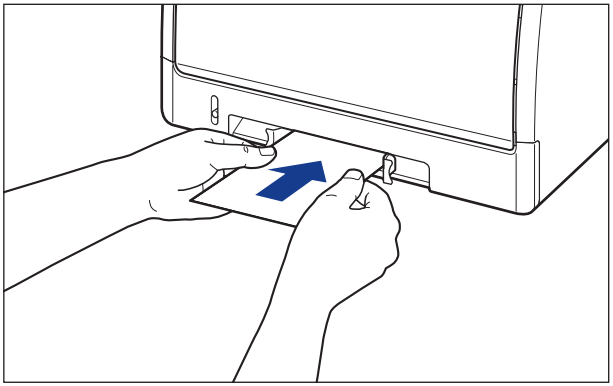

When the paper is loaded, it is sent into the slot a little.

**CAUTION**

**When loading paper, take care not to cut your hands with the edges of the paper.**

IMPORTANT

- Load the Index Card size media so that it is straight.
- If the Index Card size media is curled, flatten the curls by warping it in the opposite direction before loading it.

Next, configure the printer driver (See p. 3-65).

# Loading Envelopes in the Paper Source

This section describes the procedure for loading envelopes in the paper source.

The paper source that you can load envelopes is the paper cassette and manual feed slot. If you want to print continuously, load the envelopes in the paper cassette. When printing only one envelope that is different from those loaded in the paper cassette, load the envelope in the manual feed slot.

IMPORTANT

- For more details on the usable envelopes, see "Usable Paper," on p. 3-2.
- For details on handling the manual feed slot or paper cassette, see "Precautions for Handling the Manual Feed Slot or Paper Cassette," on p. 3-13.

## Loading Envelopes in the Paper Cassette

Load envelopes in the paper cassette using the following procedure.

- When loading envelopes at sizes of DL, COM10, C5, or Monarch in the paper cassette, load them in portrait orientation so that the printing side is facing up and the flap is toward the right of the printer when viewed from the front.
  ( ⬅ : Feeding direction)

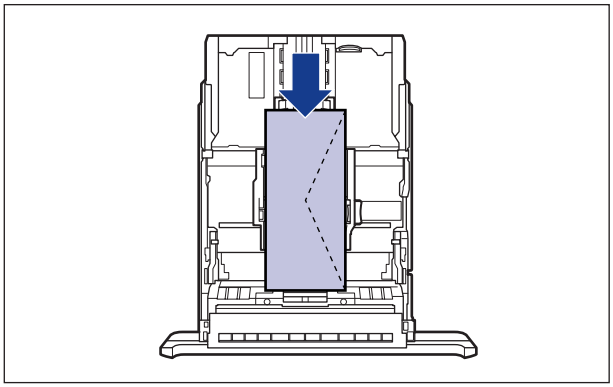

- When printing envelopes of the Envelope B5 size, close the flaps and load them so that the printing side is facing up and the envelopes are printed from the top (the edge with the flap).
  ( ⬅: Feeding direction)

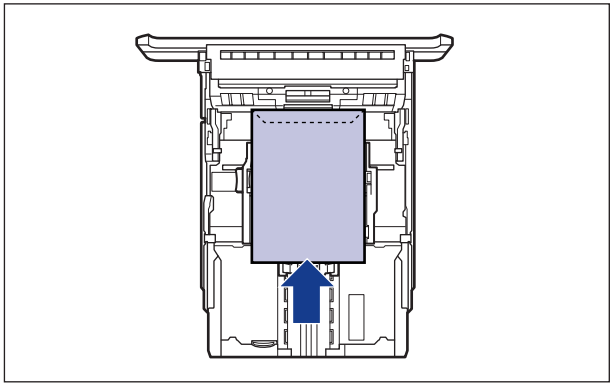

NOTE

Load envelopes in Cassette 2 (Only when the optional paper feeder is installed) in the same manner as you load envelopes in Cassette 1.

## 1 Pull out the paper cassette.

Pull out the paper cassette gently ①.

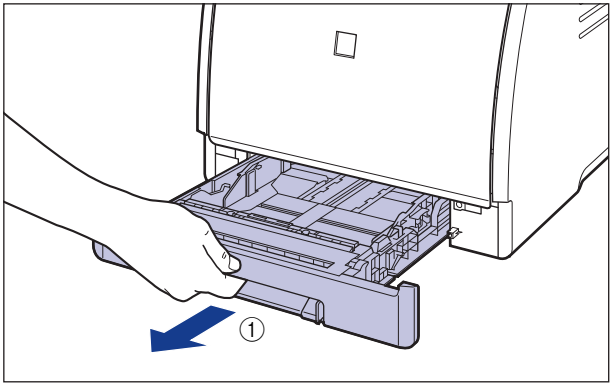

While holding the paper cassette with both hands, remove it from the printer unit as shown in the figure ②.

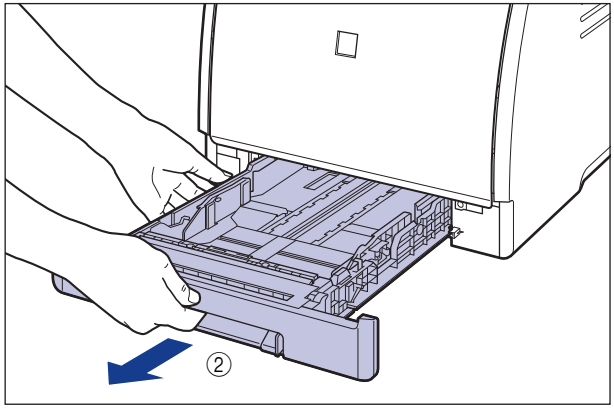


**CAUTION**

**Be sure to take the paper cassette out of the printer before loading paper. If paper is loaded while the paper cassette is partially pulled out, the paper cassette may drop or the printer may become damaged resulting in personal injury.**

## 2 Place the stack of envelopes on a flat surface, flatten them to release any remaining air, and be sure that the edges are pressed tightly.

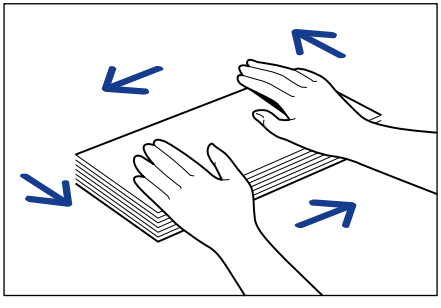

**CAUTION**

**When loading paper, take care not to cut your hands with the edges of the paper.**

## 3 Loosen any stiff corners of the envelopes and flatten curls as shown in the figure.

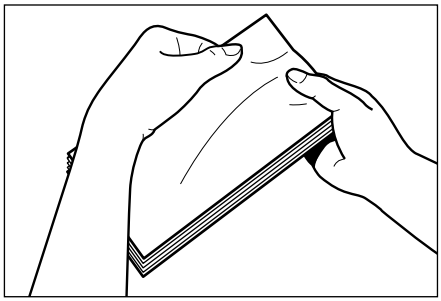

## 4 Align the edges of the envelopes on a flat surface.

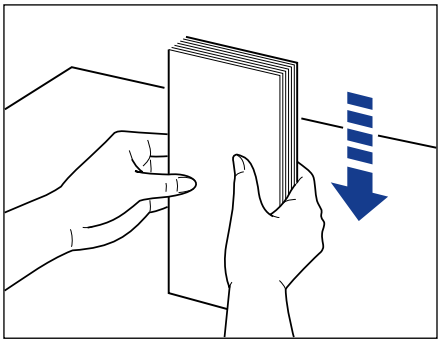

## 5 Load the envelopes so that the edge of the envelopes is aligned with the front side of the paper cassette.

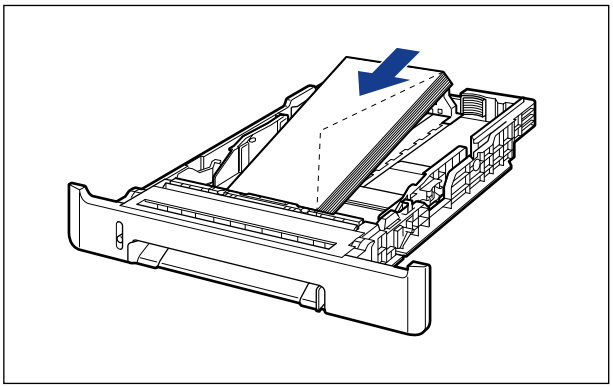

IMPORTANT

- Up to approximately 10 envelopes can be loaded in the paper cassette.

• You cannot print on the reverse side (glued side) of envelopes.

## 6 While holding the lock release lever of the side paper guides, slide the guides to the mark for the size of the loaded envelopes.

The side paper guides move together.

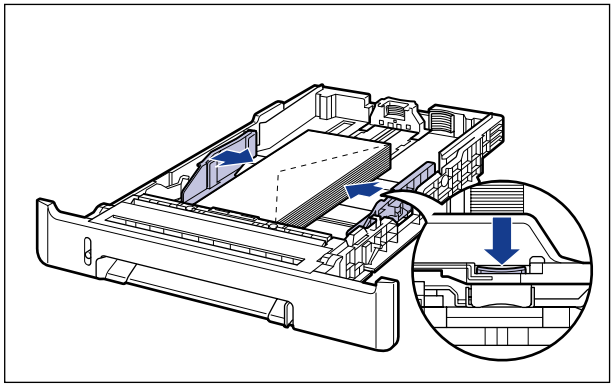

IMPORTANT

Be sure to align the paper guides with the width of the envelopes. If the paper guides are too loose or too tight, this may result in misfeeds or paper jams.

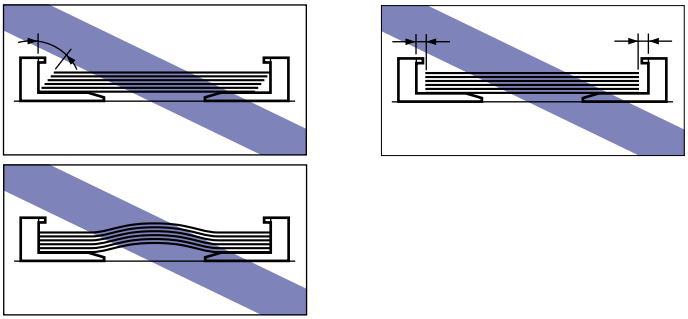

## 7 While holding the lock release lever of the rear paper guide, slide the guide to the size mark for the loaded envelopes.

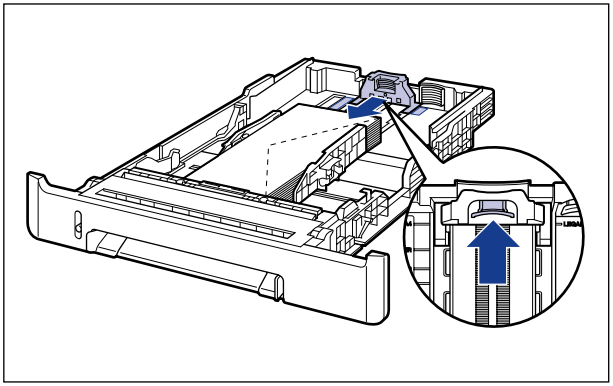

## 8 Hold down the envelopes as shown in the figure, make sure that the stack does not exceed the load limit marks (A), and then set it under the hooks (B) on the paper guides.

Make sure that there is sufficient space between the hooks of the paper guides and the stack of the envelopes. If there is no sufficient space, slightly reduce the amount of the envelopes.

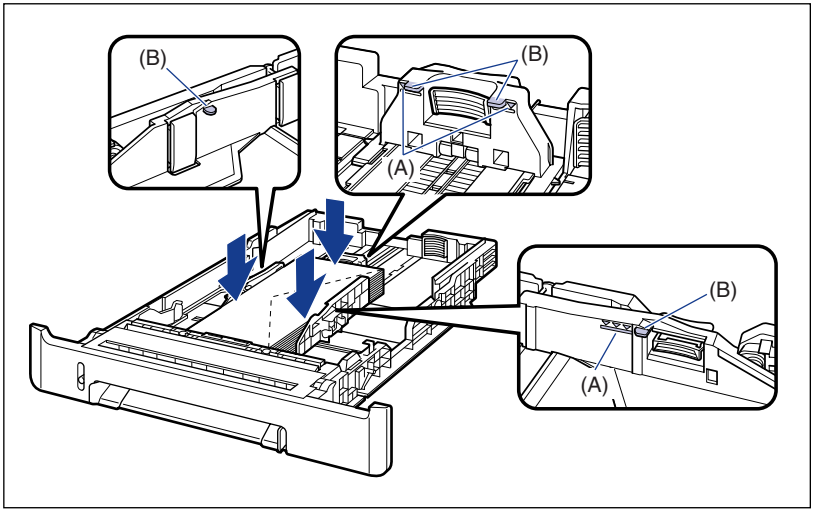

## 9 Set the paper cassette in the printer.

Push the paper cassette into the printer firmly until the front side of the paper cassette is flush with the front surface of the printer.

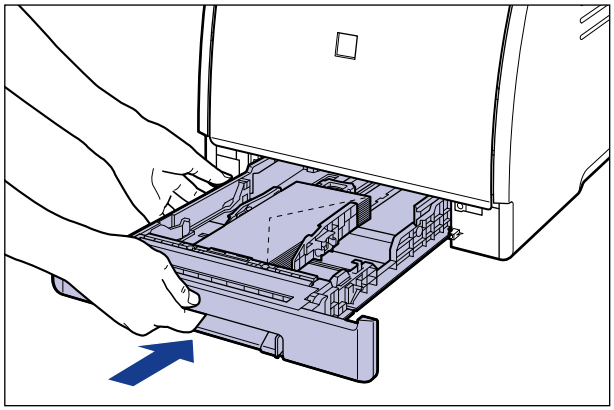

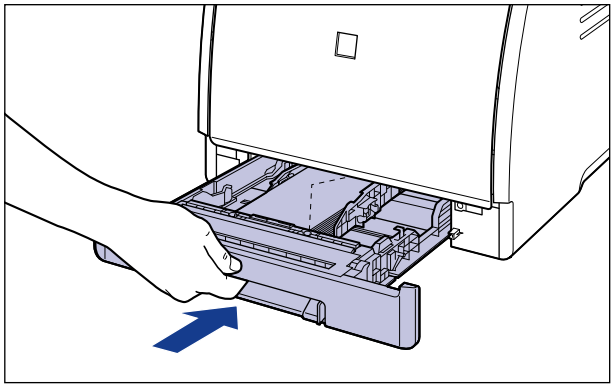

**CAUTION**

**When setting the paper cassette in the printer, be careful not to catch your fingers.**

## 10 Register the size of the loaded paper using the following procedure.

This printer's paper cassette cannot automatically detect the paper size. Therefore, you need to register the size of the loaded paper in the Printer Status Window.

## 11 Display the Printer Status Window.

For details on methods for displaying the Printer Status Window, see "Displaying the Printer Status Window," on p. 5-92.

## 12 From the [Options] menu, select [Device Settings] → [Register Paper Size in Cassettes].

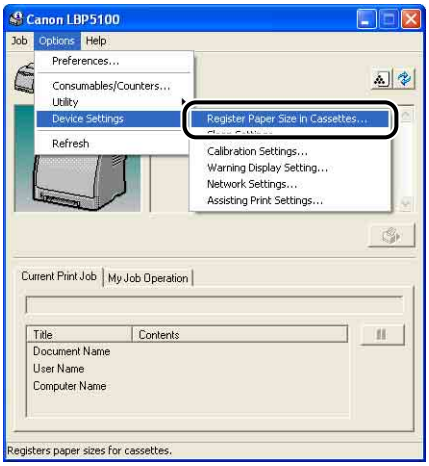


## 13 Select the size of the paper loaded in the paper cassette, then click [OK].

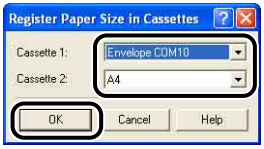


Next, configure the printer driver (See p. 3-65).

# Loading an Envelope in the Manual Feed Slot

Load an envelope in the manual feed slot using the following procedure.

- When loading an envelope at sizes of DL, COM10, C5, or Monarch in the manual feed slot, be sure to load it in portrait orientation so that the printing side is facing down and the flap is toward the right of the printer when viewed from the front.
  (⬅: Feeding direction)

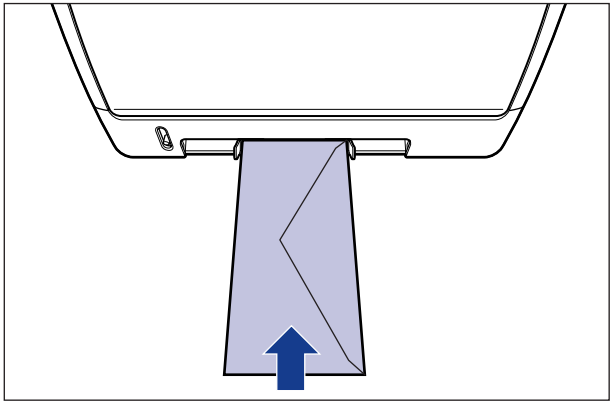

- When printing an envelope of the Envelope B5 size, close the flap and load it so that the printing side is facing down and the envelope is printed from the top (the edge with the flap).
  (⬅: Feeding direction)

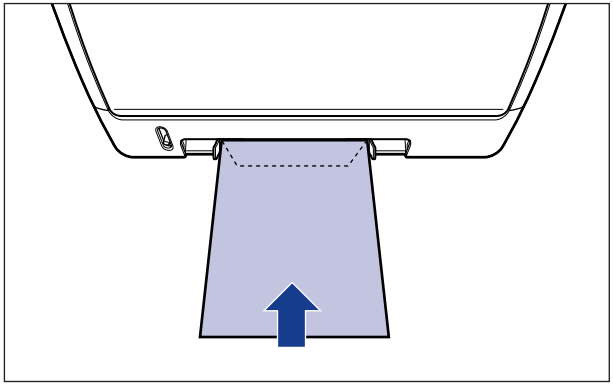

## 1 Adjust the paper guides to the width of the loaded envelope as shown in the figure.

The paper guides move together.

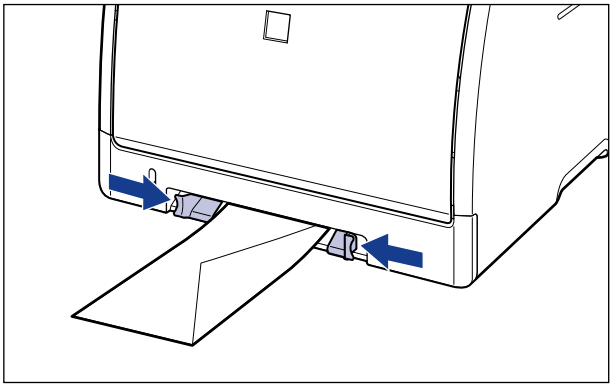

IMPORTANT

Be sure to align the paper guides with the width of the envelopes. If the paper guides are too loose or too tight, this may result in misfeeds or paper jams.

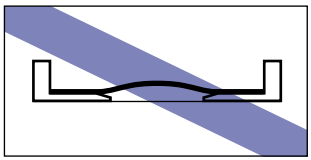

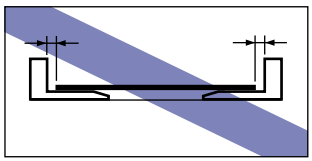

## 2 Gently insert the envelope until it touches the back of the printer while supporting the envelope with hands as shown in the figure.

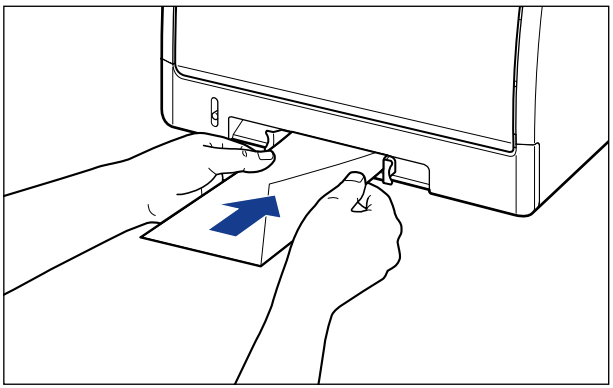

When the envelope is loaded, it is sent into the slot a little.

**CAUTION**

**When loading paper, take care not to cut your hands with the edges of the paper.**

IMPORTANT

Load the envelope so that it is straight.

Next, configure the printer driver (See p. 3-65).

# Loading Custom Size Paper (Non-Standard Paper) or Paper at a Size of Statement, Foolscap, or 16K in the Paper Source

This section describes the procedure for loading custom size paper or paper at a size of Statement, Foolscap, or 16K in the paper source.

The paper source that you can load custom size paper or paper at a size of Statement, Foolscap, or 16K is the paper cassette and manual feed slot. If you want to print continuously, load the custom size paper or paper at a size of Statement, Foolscap, or 16K in the paper cassette.
When printing only a sheet of custom size paper or paper at a size of Statement, Foolscap, or 16K that is different in size or type from the one loaded in the paper cassette, load the custom size paper or paper at a size of Statement, Foolscap, or 16K in the manual feed slot.
Custom size paper that is 76.2 mm to 215.9 mm wide and 127.0 mm to 355.6 mm long can be loaded.

IMPORTANT

- For more details on the usable paper, see "Usable Paper," on p. 3-2.
- For details on handling the manual feed slot or paper cassette, see "Precautions for Handling the Manual Feed Slot or Paper Cassette," on p. 3-13.

# Loading Custom Size Paper or Paper at a Size of Statement, Foolscap, or 16K in the Paper Cassette

Load custom size paper or paper at a size of Statement, Foolscap, or 16K in the paper cassette using the following procedure.
Be sure to load custom size paper or paper at a size of Statement, Foolscap, or 16K in portrait orientation when loading it in the paper cassette.

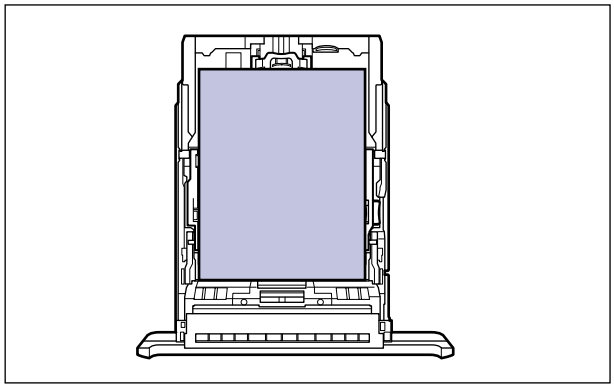

NOTE

Load custom size paper or paper at a size of Statement, Foolscap, or 16K in Cassette 2 (Only when the optional paper feeder is installed) in the same manner as you load custom size paper or paper at a size of Statement, Foolscap, or 16K in Cassette 1.

## 1 Pull out the paper cassette.

Pull out the paper cassette gently ①.

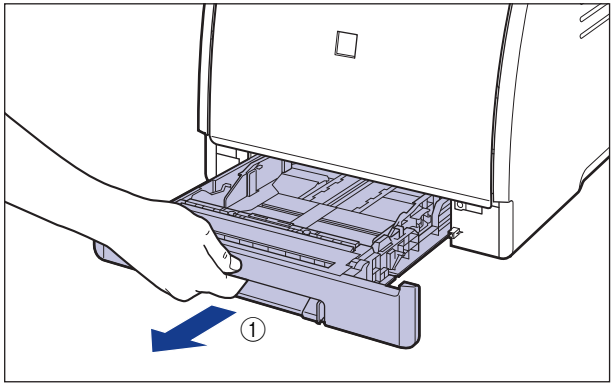

While holding the paper cassette with both hands, remove it from the printer unit as shown in the figure ②.

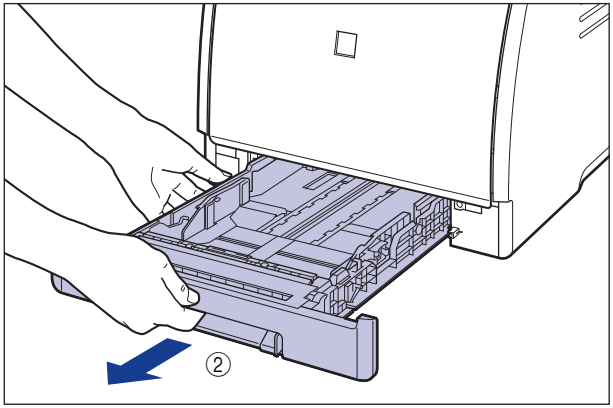


**CAUTION**

**Be sure to take the paper cassette out of the printer before loading paper. If paper is loaded while the paper cassette is partially pulled out, the paper cassette may drop or the printer may become damaged resulting in personal injury.**

## 2 When loading paper that is larger than A4 size (297.0 mm), adjust the length of the paper cassette while holding the lock release lever shown in the figure.

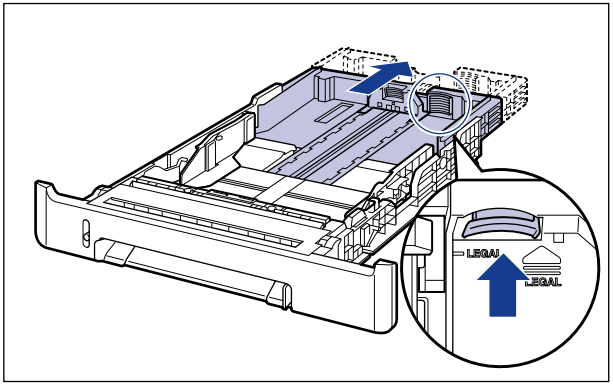

## 3 Load the paper so that the edge of the paper is aligned with the front side of the paper cassette.

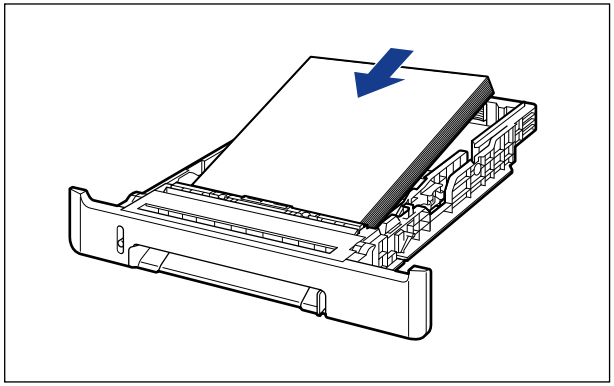

**CAUTION**

**When loading paper, take care not to cut your hands with the edges of the paper.**

IMPORTANT

If you use paper that has been poorly cut, multiple sheets of paper may be fed at once. In this case, fan the paper thoroughly, and then align the edges of the stack on a hard, flat surface.

NOTE

To print letterhead paper or paper printed with a logo, load the paper so that the printing side is facing up, as shown in the following figure.
( ⬅: Feeding direction)

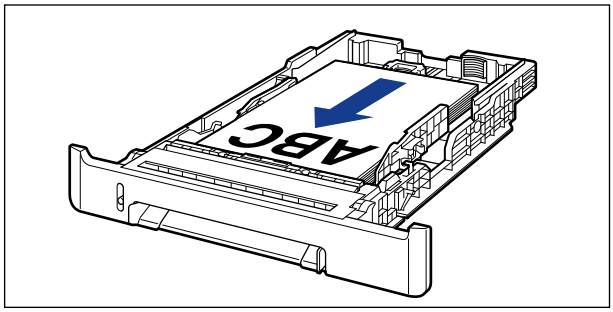


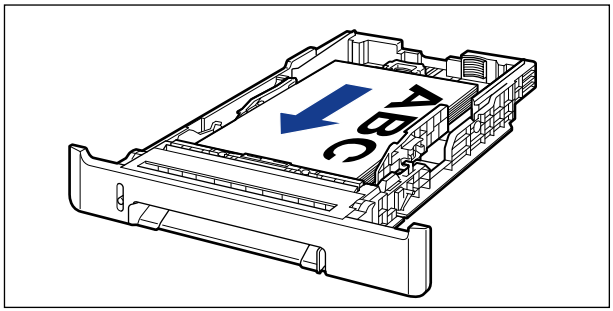


## 4 While holding the lock release lever of the side paper guides, slide the guides to the mark for the size of the loaded paper.

The side paper guides move together.

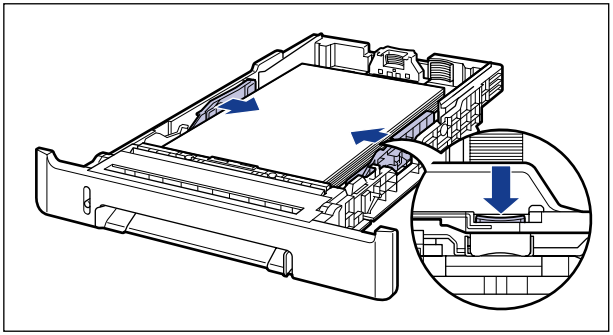

IMPORTANT

Be sure to align the paper guides with the width of the paper. If the paper guides are too loose or too tight, this may result in misfeeds or paper jams.

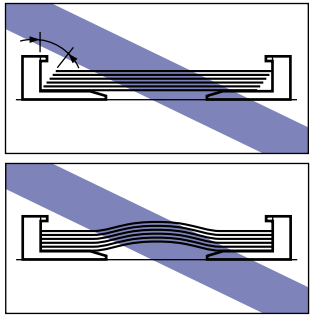

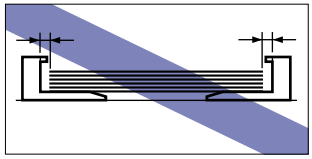



**5** **While holding the lock release lever of the rear paper guide, slide the guide to the size mark for the loaded paper.**

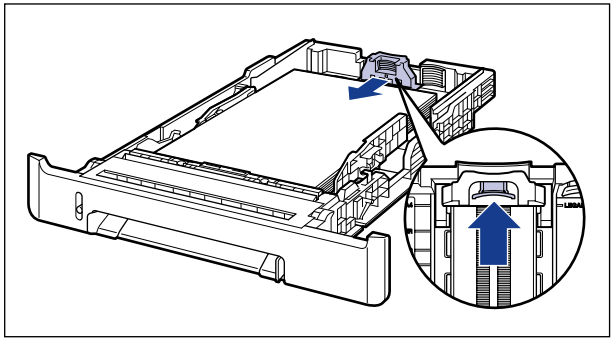

## 6 Hold down the paper as shown in the figure, make sure that the paper stack does not exceed the load limit marks (A), and then set it under the hooks (B) on the paper guides.

Make sure that there is sufficient space between the hooks of the paper guides and the paper stack. If there is no sufficient space, slightly reduce the amount of paper.

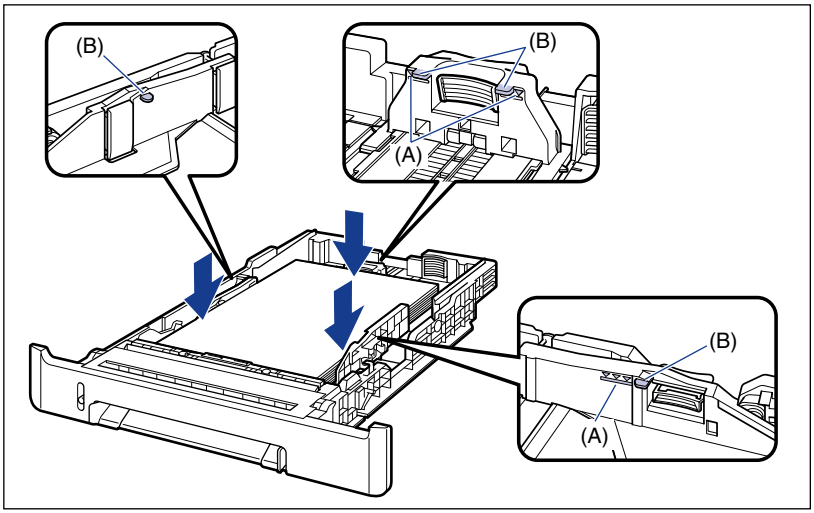

## 7 Set the paper cassette in the printer.

Push the paper cassette into the printer firmly until the front side of the paper cassette is flush with the front surface of the printer.

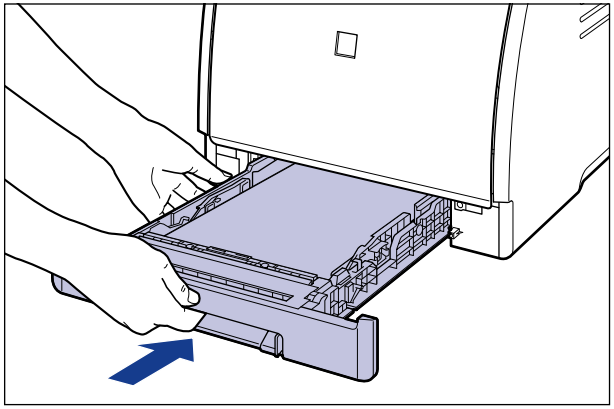

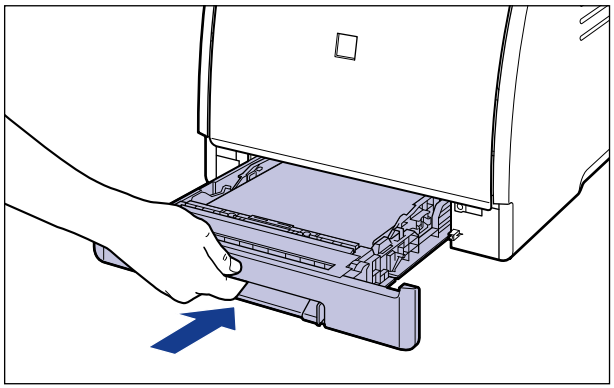

**CAUTION**

**When setting the paper cassette in the printer, be careful not to catch your fingers.**

## 8 Register the size of the loaded paper using the following procedure.

This printer's paper cassette cannot automatically detect the paper size. Therefore, you need to register the size of the loaded paper in the Printer Status Window.

## 9 Display the Printer Status Window.

For details on methods for displaying the Printer Status Window, see "Displaying the Printer Status Window," on p. 5-92.

## 10 From the [Options] menu, select [Device Settings] → [Register Paper Size in Cassettes].

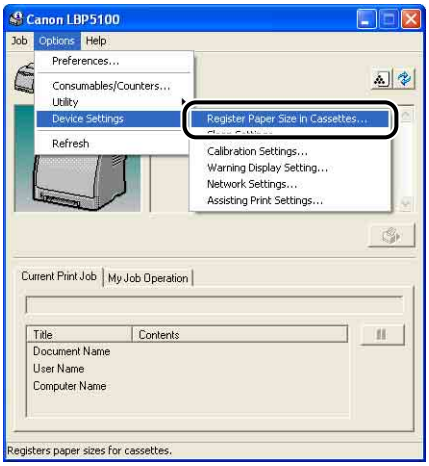


## 11 Select the size of the loaded paper, then click[OK].

- When loading custom size paper, select [Custom].
- When loading Statement size paper, select [Statement].
- When loading Foolscap size paper, select [Foolscap].
- When loading 16K size paper, select [16K].

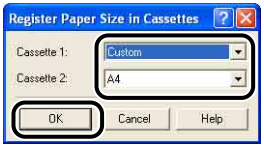


When loading custom size paper, register the custom paper size next (See p. 3-62). When loading paper at a size of Statement, Foolscap, or 16K, configure the printer driver next (See p. 3-65).

# Loading Custom Size Paper or Paper at a Size of Statement, Foolscap, or 16K in the Manual Feed Slot

Load custom size paper or paper at a size of Statement, Foolscap, or 16K in the manual feed slot using the following procedure.
Be sure to load custom size paper or paper at a size of Statement, Foolscap, or 16K in portrait orientation when loading it in the manual feed slot.

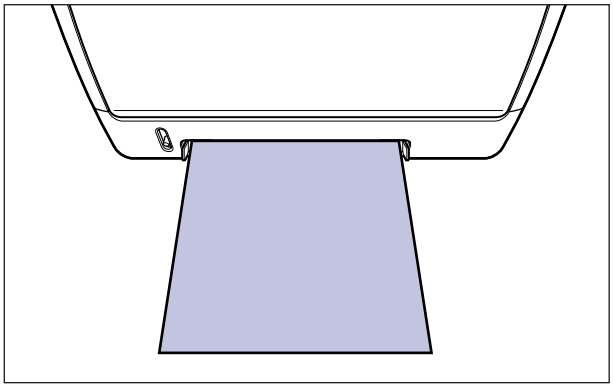



## 1 Adjust the paper guides to the width of the loaded paper as shown in the figure.

The paper guides move together.

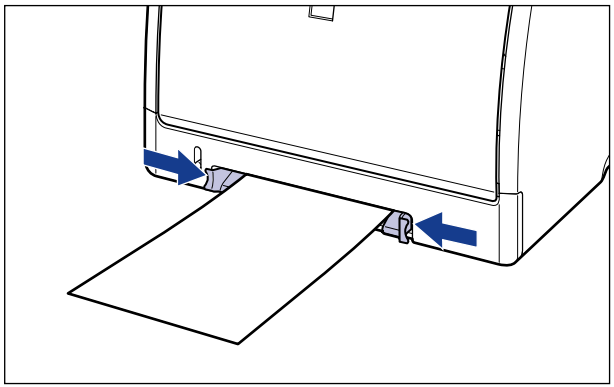

IMPORTANT

Be sure to align the paper guides with the width of the paper. If the paper guides are too loose or too tight, this may result in misfeeds or paper jams.

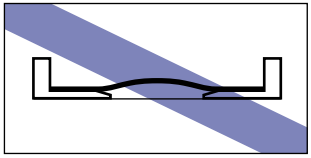

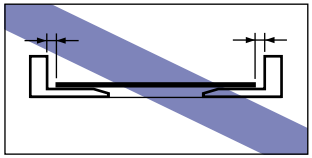

NOTE

To print letterhead paper or paper printed with a logo, load the paper so that the printing side is facing down, as shown in the following figure.
( ⬅: Feeding direction)

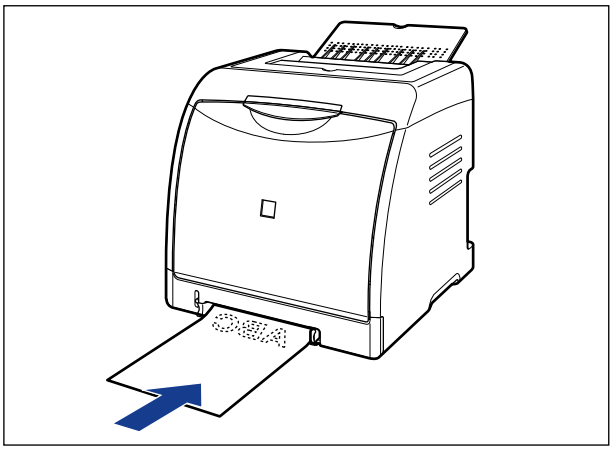

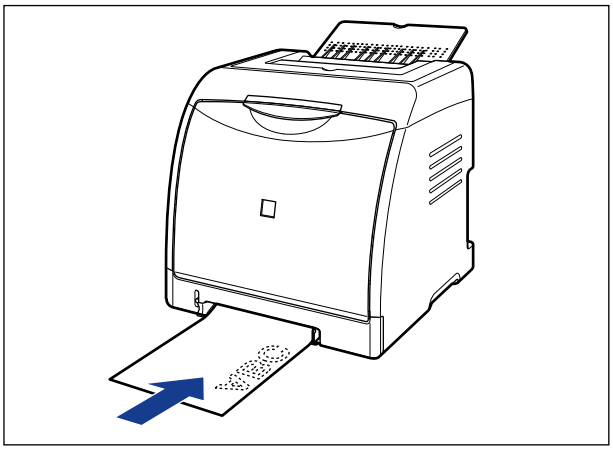

**2** **Gently insert the paper until it touches the back of the printer while supporting the paper with hands as shown in the figure.**

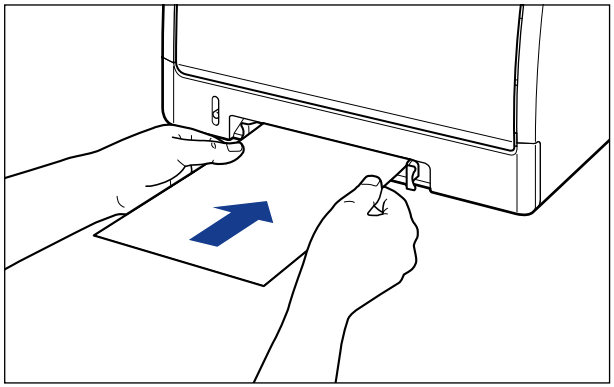

When the paper is loaded, it is sent into the slot a little.

**CAUTION**

**When loading paper, take care not to cut your hands with the edges of the paper.**

IMPORTANT

- Load the paper so that it is straight.
- If the paper is curled or folded at corners, flatten it before loading it in the printer.

When loading custom size paper, register the custom paper size next (See p. 3-62).
When loading paper at a size of Statement, Foolscap, or 16K, configure the printer driver next (See p. 3-65).

## Registering a Custom Paper Size (Non-Standard Paper)

When printing custom size paper, you need to register the custom paper size in the printer driver previously using the following procedure.

NOTE

To specify a custom paper size, display the following dialog box.

- For Windows 2000/XP/Server 2003
  Display the [Document Properties] dialog box from the [Printers and Faxes] folder (the [Printers] folder for Windows 2000).
- For Windows 98/Me
  Display the [Printer Properties] dialog box from the [Printers] folder.

## 1 Display the [Page Setup] sheet, then click [Custom Paper Size].

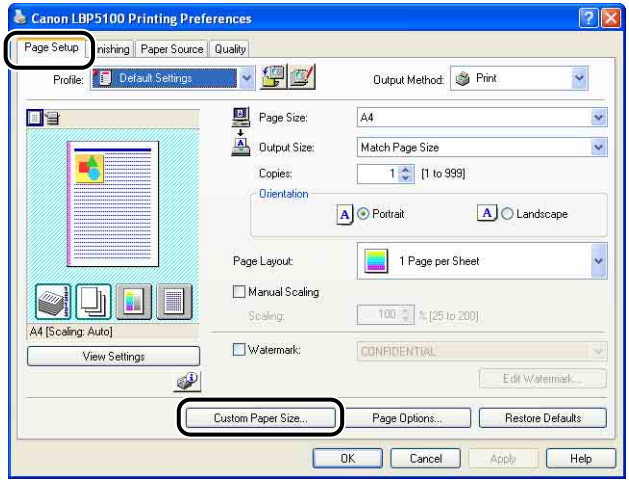


## 2 Specify the following options as needed.

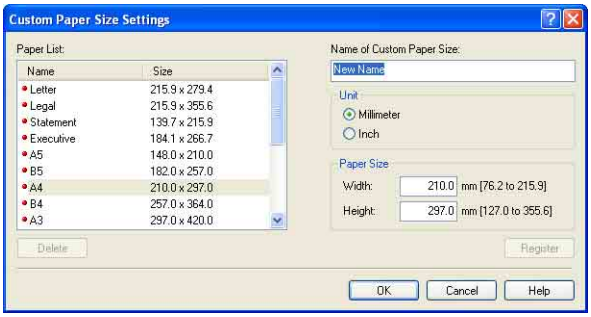


| | |
|---|---|
| [Paper List]: | Displays [Name] and [Size] of standard paper sizes and added custom paper sizes. |
| [Name of Custom Paper Size]: | You can enter the name of the custom paper size to be added. Up to 31 characters can be entered. |
| [Unit]: | Specify the unit ([Millimeter] or [Inch]) to be used when setting the custom paper size. |
| [Paper Size]: | Specify the height and width of the custom paper size ([Height] ≧ [Width]). Specify the custom paper size in portrait orientation ([Height] ≧ [Width]) within user-definable sizes. |

## 3 Click [Register].

NOTE

On Windows 98/Me, up to 30 custom paper sizes can be added. On Windows 2000/XP/Server 2003, the number depends on the system environment.

## 4 Confirm the settings, then click [OK].

Next, configure the printer driver (See p. 3-65).

# Setting Up the Printer Driver and Printing

After loading paper in the paper source, configure the printer driver using the following procedure before printing.

NOTE

- For details on the procedure for installing the printer driver, see "Installing the CAPT Software," on p. 4-4.
- For more details on the settings for the printer driver, see "Various Pages in the Printer Driver" (p. 5-25) or Online Help. For details on methods for displaying Online Help, see "How to Use Online Help," on p. 5-79.

**1** **Select [Print] from the [File] menu in the application. Select the name of this printer for [Name] or [Printer Name], and then click [Properties].**

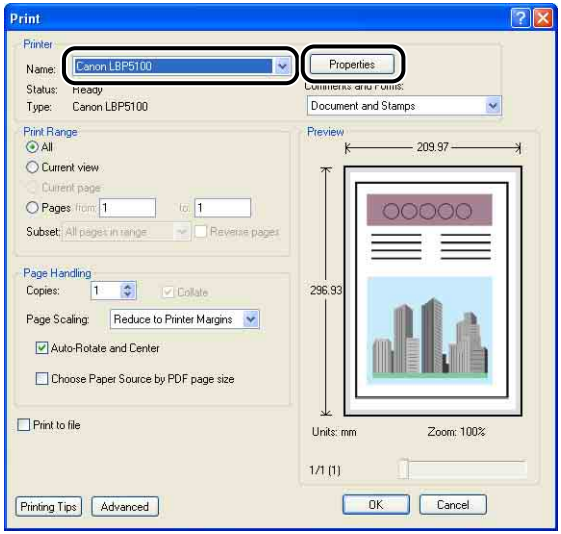

## 2 Display the [Page Setup] sheet, then from [Page Size], select the size of a document that you have created with the application.

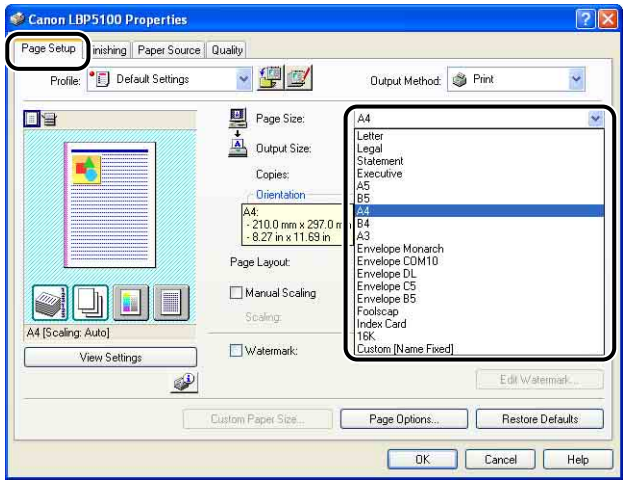


NOTE

If you set [Page Size] to [Envelope DL], [Envelope COM10], [Envelope C5], [Envelope Monarch], or [Envelope B5], the following message appears, and [Paper Type] is automatically specified.

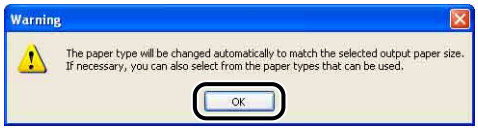

## 3 From [Output Size], select the size of the loaded paper as needed.

Leave the setting at [Match Page Size] when the paper size specified for [Page Size] and that of the paper loaded in the paper cassette are the same, since there is no need to change the setting.

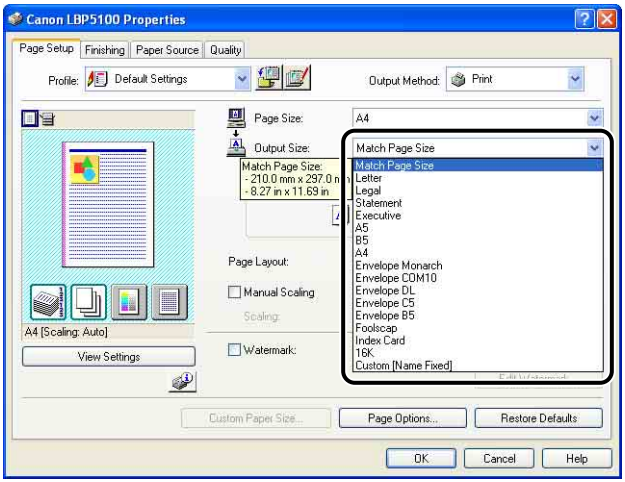


IMPORTANT

The print will be automatically reduced or enlarged to fit on the page when the settings for [Page Size] and [Output Size] are different.

## 4 Make sure that the setting in the [Register Paper Size in Cassettes] dialog box in the Printer Status Window and the paper size in [Output Size] match when printing from the paper cassette.

For displaying the [Register Paper Size in Cassettes] dialog box, see "Loading Paper in the Paper Cassette," on p. 3-17.

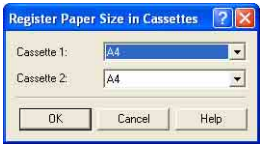

## 5 Display the [Paper Source] sheet, then select [Paper Source].

Specify the same setting as the one for [Paper Source], although the setting for [Paper Source] changes to ones such as [First Page] or [Other Pages] when [Paper Selection] is set to other than [Same Paper for All Pages].

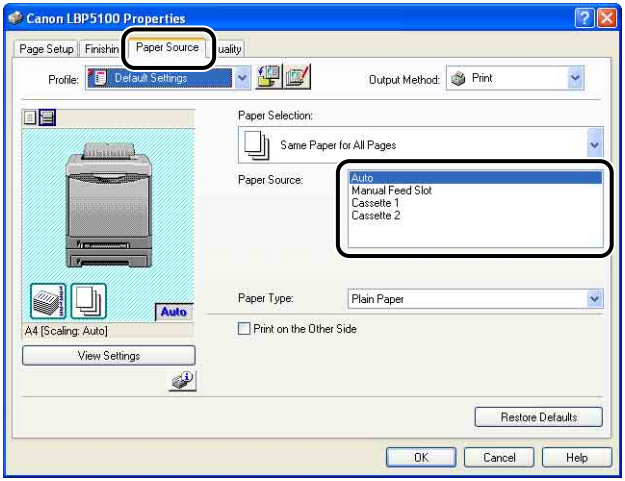


### IMPORTANT

When [Paper Source] in the [Paper Source] sheet is set to [Cassette 1] or [Cassette 2], and the [Detect Paper Size] check box in the [Finishing Details] dialog box in the printer driver is not selected, the printer does not check the paper size. When the size of the paper loaded in the paper cassette and the specified settings are different from each other, and the [Detect Paper Size] check box is selected (default setting), the printer operations vary as the following examples.

Examples)

| Size of the Paper Loaded in the Paper Cassette | [Output Size]*1 | [Register Paper Size in Cassettes]*2 | Printer Operation |
|---|---|---|---|
| A5 | A4 | A5 | The size specified in [Output Size] is smaller than that of the paper loaded in the paper cassette. Therefore, the message <Specified Paper Different from Set Paper> appears in the Printer Status Window after the first page is printed, and the job is paused. |
| A4 | A4 | A5 | |

| Size of the Paper Loaded in the Paper Cassette | [Output Size]*1 | [Register Paper Size in Cassettes]*2 | Printer Operation |
|---|---|---|---|
| A5 | A4 | A4 | The setting for [Output Size] and the size of the paper loaded in the paper cassette are different from each other. Therefore, the message <Specified Paper Different from Set Paper> appears in the Printer Status Window after the first page is printed, and the job is paused. |
| A4 | A5 | A5 | The printer prints as is. Since the size of the paper loaded in the paper cassette is larger than that specified in [Output Size], however, the margins of the printed paper become wider. |

*1 The setting located in the [Page Setup] sheet

*2 The setting located in [Device Settings] in the [Options] menu in the Printer Status Window

When the message appears, and paper of the size specified in [Output Size] is to be printed, load the appropriate paper in the paper cassette and specify the appropriate paper size in the [Register Paper Size in Cassettes] dialog box.
When printing the currently loaded paper, click the [Resolve Error] button.
If [Paper Source] is set to [Auto], the printer checks the paper size regardless of the setting for [Detect Paper Size].

NOTE

When printing heavy paper, transparencies, or labels from the paper cassette, select [Cassette 1] or [Cassette 2] in [Paper Source]. When [Auto] is selected, paper cannot be fed from the paper cassette.

## 6 Select the type of the loaded paper in [Paper Type].

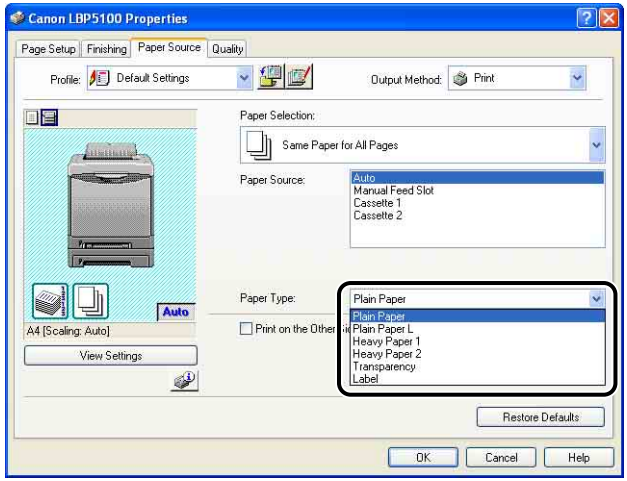


NOTE

Load paper based on the following [Paper Type] criteria:

| Paper Type | | Printer Driver Setting |
|---|---|---|
| Plain paper | 60 - 74 g/m$^2$ | [Plain Paper L] |
| | 75 - 90 g/m$^2$ | [Plain Paper] |
| Heavy paper | 91 - 120 g/m$^2$ | [Heavy Paper 1] |
| | 121 - 163 g/m$^2$ | [Heavy Paper 2] |
| Transparency | | [Transparency] |
| Label | | [Label] |
| Envelope | | * |

* When printing envelopes, the printer automatically applies the appropriate print mode to the envelope type by specifying [Output Size] in the [Page Setup] sheet.
Set [Paper Type] to [Envelope L] when the flaps of envelopes stick to the body on printing with [Paper Type] set to [Envelope].

## 7 Click [OK] to close the Properties dialog box.

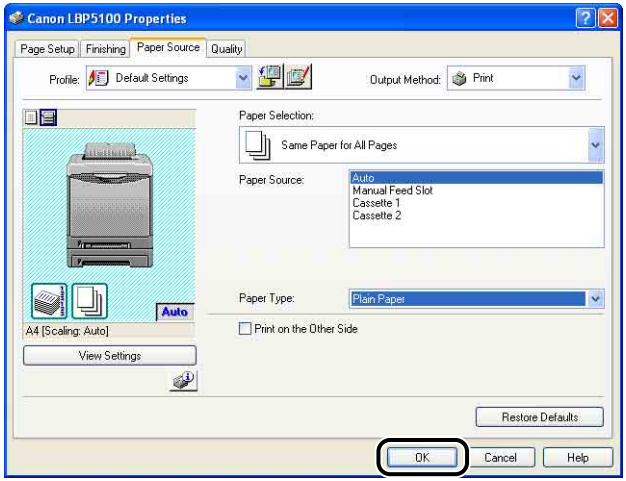


## 8 Click [OK] to start printing.

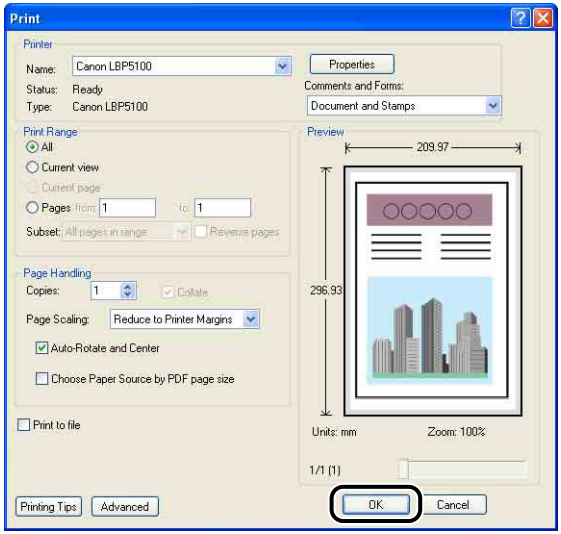

# 2-sided Printing

This printer is equipped with a function that can perform 2-sided printing. This printer is equipped with a function that can perform 2-sided printing. Plain paper (60 - 90 g/m$^2$) and heavy paper (91 - 105 g/m$^2$) at sizes of A4, Legal, Letter, and Foolscap can be used for automatic 2-sided printing.

IMPORTANT

- You cannot perform automatic 2-sided printing on heavy paper (106 - 163 g/m$^2$), transparencies, labels, envelopes, and Index Card size media.
- During automatic 2-sided printing, do not touch the paper until it is output to the output tray completely. During automatic 2-sided printing, the paper is first output partially after the front side is printed, and then it is fed again to be printed on the reverse side.

NOTE

When the last page for the 2-sided printing is 1-sided printing, the printer prints faster than normal 2-sided printing by clicking [Finishing Details] in the [Finishing] sheet and [Advanced Settings] in the [Finishing Details] dialog box, and then selecting the [Print Last Page in 1-sided Mode when 2-sided Printing is Set] check box in the [Advanced Settings] dialog box. However, when performing 2-sided printing on punched paper or previously printed paper, the orientation or printing surface of the last page may differ from other pages. In this case, clear the check box.

## 1 Load paper in the manual feed slot or paper cassette.

NOTE

- On automatic 2-sided printing, the reverse side of the paper is printed first, therefore the paper should be loaded in the opposite orientation to that for 1-sided printing. When printing paper such as a letterhead in which faces and directional orientations specified, load paper as follows.

- When paper is fed from the paper cassette, load the paper so that the printing side (front side) is facing down, as shown in the following figures.
  ( ⬅ : Feeding direction)

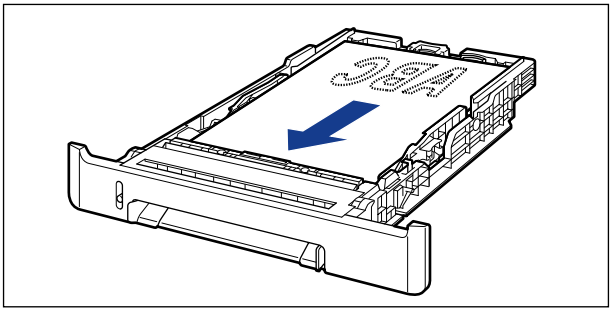

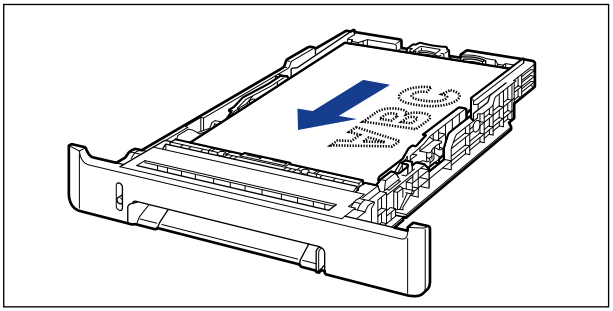

- When paper is fed from the manual feed slot, load the paper so that the printing side (front side) is facing up, as shown in the following figures.
  ( ⬅ : Feeding direction)

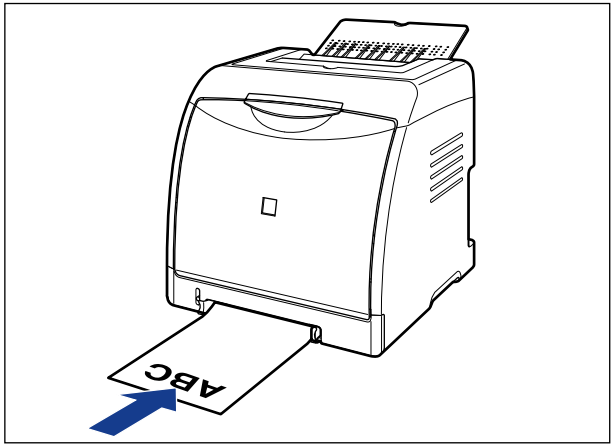


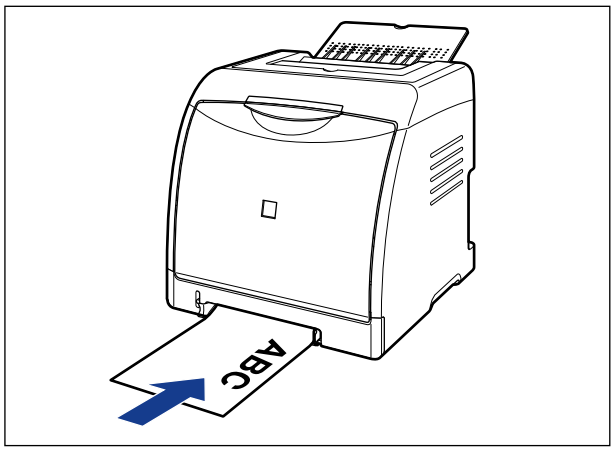


- Load paper in Cassette 2 (Only when the optional paper feeder is installed) in the same manner as you load paper in Cassette 1.

## 2 Select [Print] from the [File] menu in the application. Select the name of this printer for [Name] or [Printer Name], and then click [Properties].

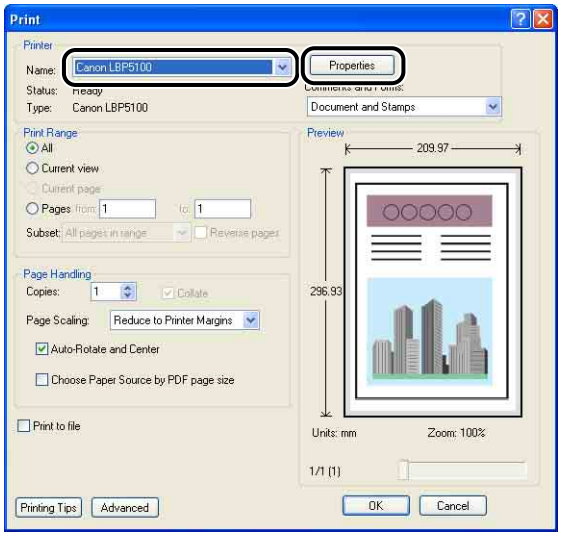


## 3 Display the [Page Setup] sheet, then from [Page Size], select the size of a document that you have created with the application.

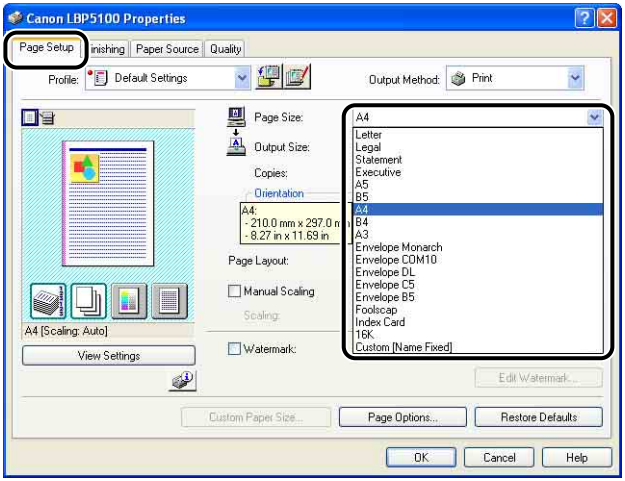

## 4 From [Output Size], select the size of the loaded paper as needed.

Leave the setting at [Match Page Size] when the page size and the size of the paper loaded in the paper source are the same, since there is no need to change the setting.

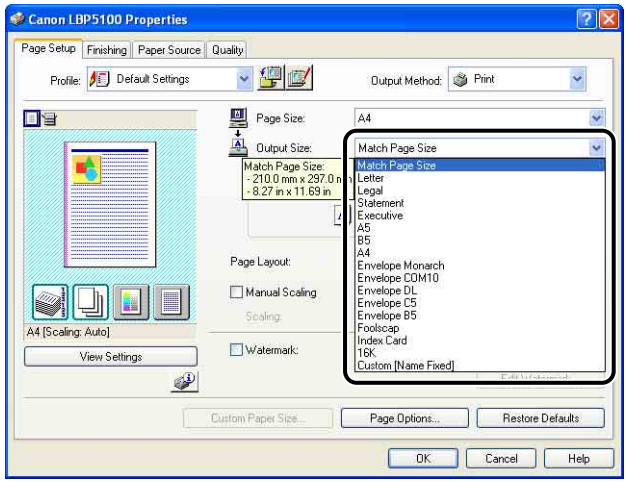


IMPORTANT

The print will be automatically reduced or enlarged to fit on the page when the settings for [Page Size] and [Output Size] are different.

## 5 Make sure that the setting in the [Register Paper Size in Cassettes] dialog box in the Printer Status Window and the paper size in [Output Size] match when printing from the paper cassette.

For displaying the [Register Paper Size in Cassettes] dialog box, see "Loading Paper in the Paper Cassette," on p. 3-17.

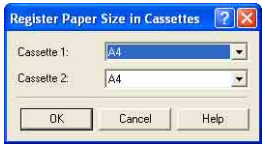

## 6 Display the [Finishing] sheet and select [2-sided Printing] for [Print Style].

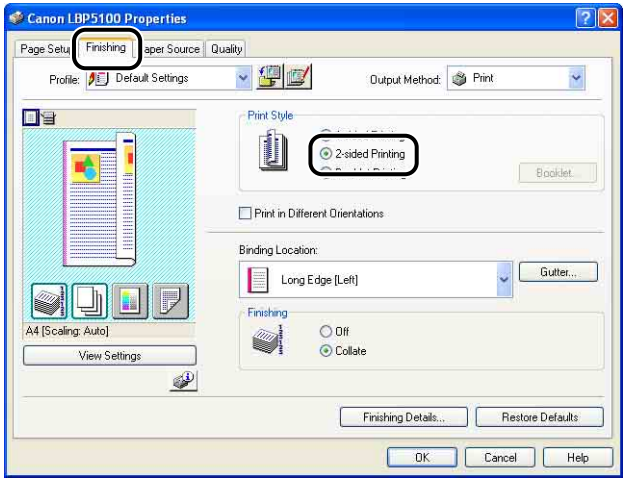


## 7 Display the [Paper Source] sheet, then select [Paper Source].

Specify the same setting as the one for [Paper Source], although the setting for [Paper Source] changes to ones such as [First Page] or [Other Pages] when [Paper Selection] is set to other than [Same Paper for All Pages].

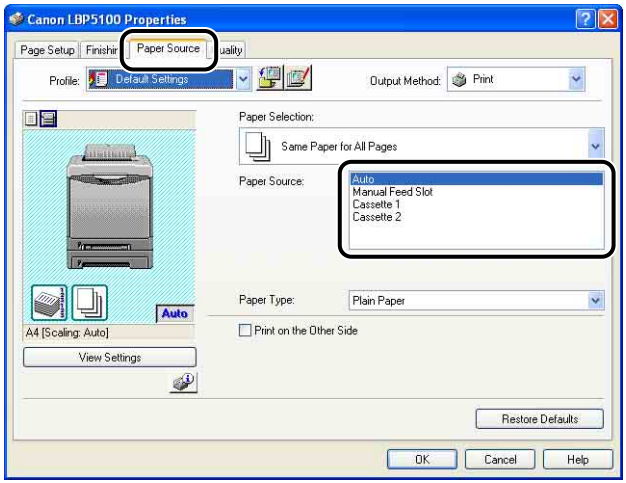


NOTE

When printing heavy paper from the paper cassette, select [Cassette 1] or [Cassette 2] in [Paper Source]. When [Auto] is selected, paper cannot be fed from the paper cassette.

## 8 Select the type of the loaded paper in [Paper Type].

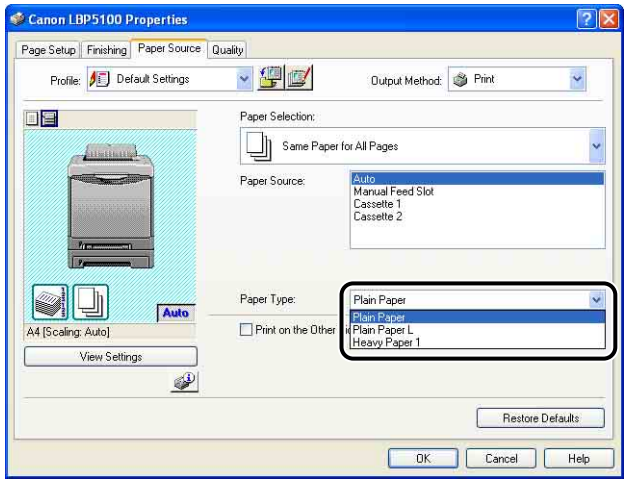


NOTE

Load paper based on the following [Paper Type] criteria:

| Paper Type | | Printer Driver Setting |
|---|---|---|
| Plain paper | 60 - 74 g/m$^2$ | [Plain Paper L] |
| | 75 - 90 g/m$^2$ | [Plain Paper] |
| Heavy paper | 91 - 105 g/m$^2$ | [Heavy Paper 1]* |

* You cannot perform automatic 2-sided printing on heavy paper that weighs between 106 and 163g/m$^2$.

## 9 Click [OK] to close the Properties dialog box.

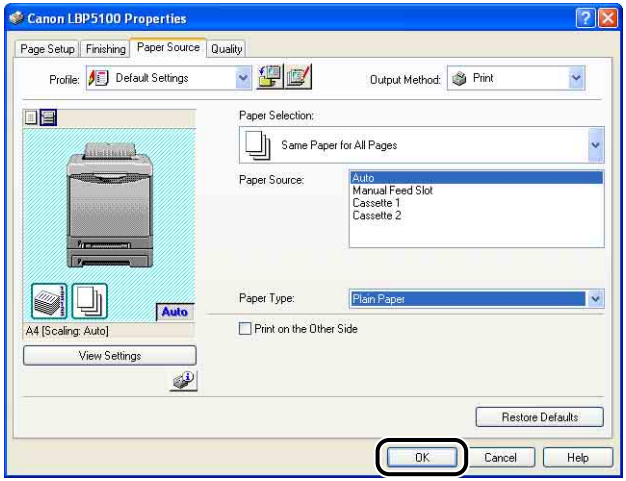


## 10 Click [OK] to start printing.

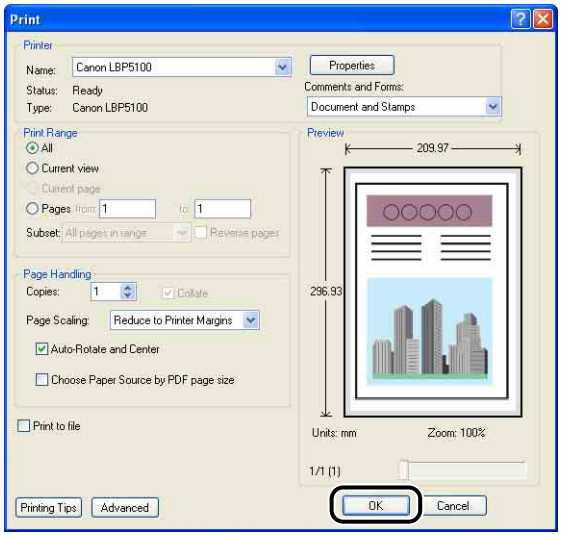

# Setting Up the Printing Environment 4

CHAPTER

This chapter describes the procedure for installing the printer driver in a computer and specifying the settings for printing from a network computer by sharing the printer on the network.


Introduction . . . . . 4-2
After Installing the Printer . . . . . 4-2
Tasks to Perform Each Time You Print . . . . . 4-2
System Requirements . . . . . 4-2
Installing the CAPT Software . . . . . 4-4
Installing from CD-ROM . . . . . 4-5
Installing with Plug and Play . . . . . 4-13
Installing from [Add Printer Wizard] . . . . . 4-32
After Completing Installation . . . . . 4-50
For Windows XP/Server 2003 . . . . . 4-50
For Windows 98/Me/2000 . . . . . 4-51
Checking the Operations by Configuration Page Print . . . . . 4-52
Printing from a Network Computer by Sharing the Printer on a Network . . . . . 4-55
Print Server Settings . . . . . 4-56
Installation on Clients . . . . . 4-63
Uninstalling the CAPT Software . . . . . 4-76

# Introduction

## After Installing the Printer

The following shows the tasks that should be performed after installing the printer:

### ■ Installing the printer driver

The printer driver is software required for printing from an application you use. Specify the print settings in the printer driver. The procedure for installing the printer driver varies depending on the system environment.

- When printing with the printer and computer connected with the USB cable (See p. 4-4)
- When printing with the optional network board installed, and the printer and the computer connected by a LAN cable (See Network Guide)

### ■ Sharing the printer on a network (See p. 4-55)

If you share this printer on a network and use it from a computer on the network, you must specify the settings for the computer and install the printer driver on the client computers.

## Tasks to Perform Each Time You Print

The following shows the tasks that should be performed each time you print:

### ■ Specifying printing preferences

Specify the paper size, document size, and print copies in the printer driver. If you do not specify these printing preferences properly, you may not be able to obtain expected printout results.

### ■ Performing printing

Select the print menu from the application. This procedure varies depending on the application you are using. See the instruction manual supplied with the application.

## System Requirements

The following system environment is required to use the printer driver:

### ■ Operating system software

- Microsoft Windows 98
- Microsoft Windows Me
- Microsoft Windows 2000 Server/Professional

- Microsoft Windows XP Professional/Home Edition*
- Microsoft Windows Server 2003*

* 32-bit processor version only

- System Requirements (minimum required)

| | Windows 98/Me | Windows 2000/XP/Server 2003 |
|---|---|---|
| **CPU** | Pentium II 300 MHz or more | Pentium II 300 MHz or more |
| **Memory (RAM)*1** | 64 MB or more | 128 MB or more |
| **Hard Disk*2** | 89 MB or more | 89 MB or more |

(PC/AT Compatibles)

*1 As the amount of available memory varies depending on the system configuration of the computer or application you are using, the above environment does not guarantee printing in all cases.

*2 This indicates free hard disk space required for installing the printer driver and manuals using Easy Installation. Required free hard disk space varies depending on the system environment or installation method.

- System Requirements (recommended)

| | Windows 98/Me | Windows 2000/XP/Server 2003 |
|---|---|---|
| **CPU** | Pentium III 1.2GHz or more | Pentium III 1.2GHz or more |
| **Memory (RAM)** | 128 MB or more | 256 MB or more |

## ■ Interface

When connecting with USB

- Windows 98/Me: USB Full-Speed (USB1.1 equivalent)
- Windows 2000/XP/Server 2003: USB 2.0 Hi-Speed/USB Full-Speed (USB1.1 equivalent)

When connecting to a network

- Connector: 10BASE-T or 100BASE-TX
- Protocol: TCP/IP

NOTE

- When using Sound, a PC synthesizer (and the driver for PCM synthesizer) must be installed in your computer. Do not use a PC Speaker driver (speaker.drv etc.).
- This printer uses bi-directional communication. Operation of the printer when connected via unidirectional communication equipment has not been tested, and as a result, Canon cannot guarantee printer operation when the printer is connected using unidirectional print servers, USB hubs or switching devices.

# Installing the CAPT Software

This section describes the procedure for installing the CAPT software when connecting this printer to your computer with a USB cable.

There are the following methods for installing the printer driver:

| Installation method | Contents | Reference page |
|---|---|---|
| Easy Installation | Installs the manuals when installing the printer driver from the CD-ROM supplied with the printer (CD-ROM Setup). | p. 4-5 |
| Custom Installation | You can choose to install only the printer driver or only the manuals from the CD-ROM supplied with the printer (CD-ROM Setup).*1 | p. 4-5 |
| Installing with Plug and Play | Searches for the printer automatically, selects the file required for the installation from the CD-ROM supplied with the printer, and then installs the printer driver. | Windows XP/Server 2003: p. 4-13 |
| | | Windows 2000: p. 4-18 |
| | | Windows 98/Me: p. 4-23 |
| Installing from [Add Printer Wizard]*2 | Using [Add Printer Wizard], selects the file required for the installation from the CD-ROM supplied with the printer, and then installs the printer driver. | Windows XP/Server 2003: p. 4-32 |
| | | Windows 2000: p. 4-39 |
| | | Windows 98/Me: p. 4-45 |

*1 If you want to install the manuals only, see "Installing the Manuals," on p. 5-85.

*2 When installing the CAPT software from [Add Printer Wizard], the USB port for connecting this printer has to have already been registered.

IMPORTANT

- The CAPT software is required for printing with this printer. Be sure to install the CAPT software.
- When there is not enough free hard disk space, a message will appear during the installation. Stop the installation and increase the free space, and then install the CAPT software again.

NOTE

- For details on the procedure for installing the software when installing the optional network board and connecting the printer to the computer with LAN, see "Network Guide".

- For details on the procedure for installing the software when sharing this printer on a network and printing from a computer on the network, see "Printing from a Network Computer by Sharing the Printer on a Network," on p. 4-55.
- To update the additional driver (alternate driver), uninstall the printer driver used in the print server, install the new printer driver, and then see "Print Server Settings" (p. 4-56) and install the additional driver again.
- This printer does not come with a USB cable. Have an appropriate one available for the computer you are using. Use a USB cable with the following symbol.

## Installing from CD-ROM

The screen shots used in this section are from Windows XP.

IMPORTANT

If you are using Windows 2000/XP/Server 2003, be sure to log on as a member of Administrators when starting up.

**1** **Make sure that the printer and computer are OFF.**

**2** **Connect the B-type (square) end of the USB cable to the USB connector on the printer.**

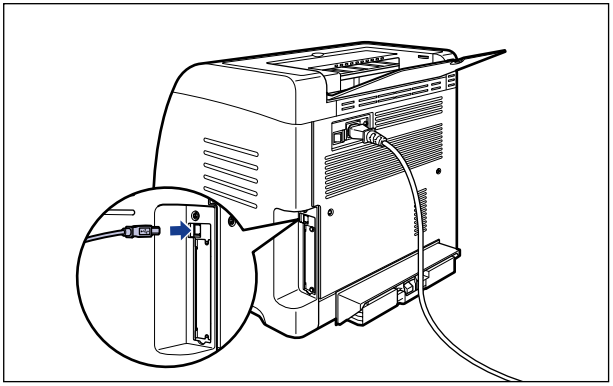

## 3 Connect the A-type (flat) end of the USB cable to the USB port on the computer.

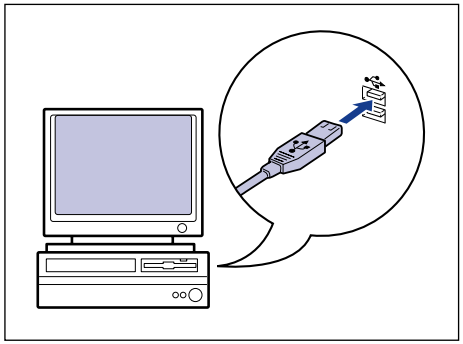

## 4 Turn the computer on and start up Windows.

IMPORTANT

If a Wizard appears by the Plug and Play automatic setup, click [Cancel], and then install the CAPT software using this procedure.

## 5 Insert the supplied "LBP5100 User Software" CD-ROM into the CD-ROM drive.

If the CD-ROM is already in the drive, eject the disk and re-insert it into the drive.

IMPORTANT

If CD-ROM Setup does not appear, select [Run] from the [Start] menu, enter "D:\English\MInst.exe", and then click [OK]. (The CD-ROM drive name is indicated as "D:" in this manual. The CD-ROM drive name may differ depending on the computer you are using.)

## 6 Click [Easy Installation] or [Custom Installation].

[Easy Installation] allows you to install the printer driver and the instruction manuals simultaneously. If you do not install the manuals, select [Custom Installation].

## 7 Click [Install].

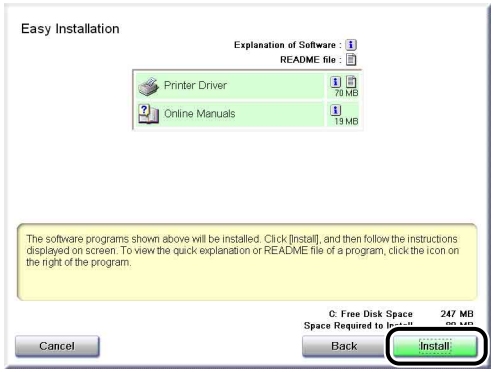

If you selected [Custom Installation] in Step 6, clear the [Online Manuals] check box, and then click [Install].

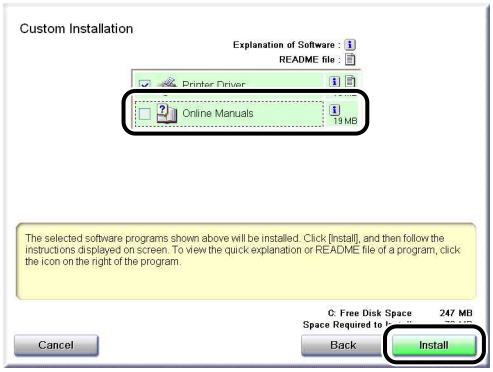


## 8 Confirm the contents, then click [Yes].

## 9 Click [Next].

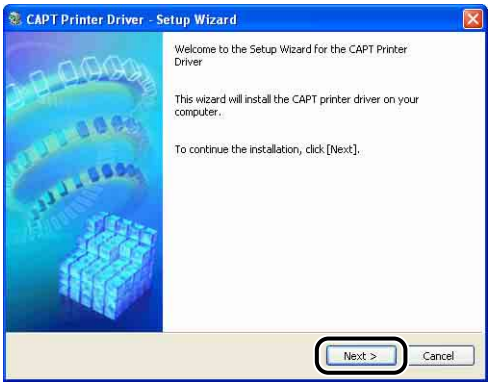

## 10 Select [Install with USB Connection], then click [Next].

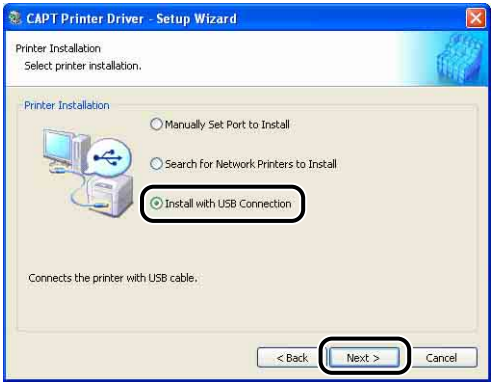


Depending on the system environment, a message that prompts you to restart the computer may appear. In this case, restart the computer and continue the installation.

If you are using Windows XP Service Pack 2 or another operating system equipped with Windows Firewall, the following screen is displayed. Specify whether to configure Windows Firewall to unblock communication with the client computers when sharing the printer on a network.
Click [Yes] when you share the printer on a network. After completing the installation, see "Printing from a Network Computer by Sharing the Printer on a Network" (p. 4-55) and specify the settings for sharing the printer on the network.
Click [No] when you do not share the printer on a network.

NOTE

Even after the installation, you can change the Firewall settings using "CAPT Windows Firewall Utility" in the supplied CD-ROM. For more details, see "Windows Firewall," on p. 9-14.

## 11 The message <Installation cannot be stopped once it starts. Do you want to continue?> appears. Click [Yes].

NOTE

- Depending on the system environment, it may take a long time to complete the installation.
- If you are using Windows 2000 and the [Digital Signature Not Found] dialog box appears, click [Yes].
- If you are using Windows XP/Server 2003 and the [Hardware Installation] dialog box appears, click [Continue Anyway].

## 12 When the following screen is displayed, turn the printer ON.

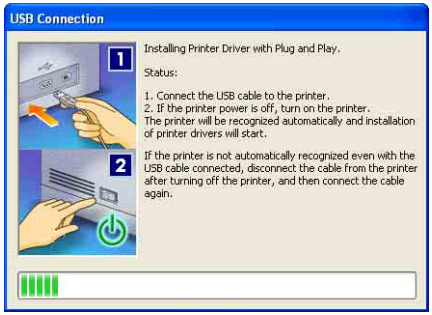


Press " I " of the power switch to turn the printer ON.

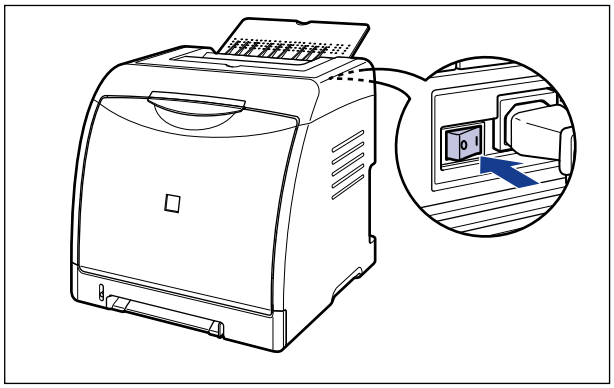

Installation of the USB class driver and the printer driver starts automatically.

NOTE

- If the printer is not recognized automatically even after the USB cable is connected, see "Installation Problems," on p. 7-39.
- If you are using Windows XP/Server 2003 and the [Hardware Installation] dialog box appears, click [Continue Anyway].

## 13 If [Easy Installation] is selected in Step 6, the manuals are installed.

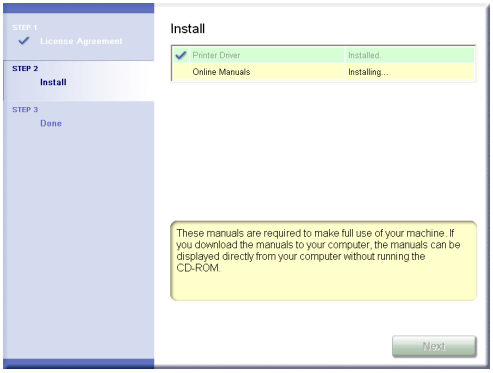


## 14 Confirm the installation results, then click [Next].

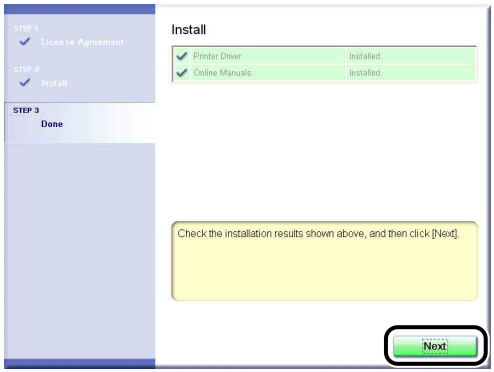


NOTE

If the printer driver is not installed properly, see "Installation Problems," on p. 7-39.

## 15 Select the [Restart Computer Now (Recommended)] check box, then click [Restart].

Windows restarts.

The installation of the USB class driver and the printer driver is completed.

# Installing with Plug and Play

## *For Windows XP/Server 2003*

If you are using an operating system other than Windows XP/Server 2003, see the following.

- For Windows 2000 (See p. 4-18)
- For Windows 98/Me (See p. 4-23)

The screen shots used in this section are from Windows XP.

**1** **Make sure that the printer and computer are OFF.**

**2** **Connect the B-type (square) end of the USB cable to the USB connector on the printer.**

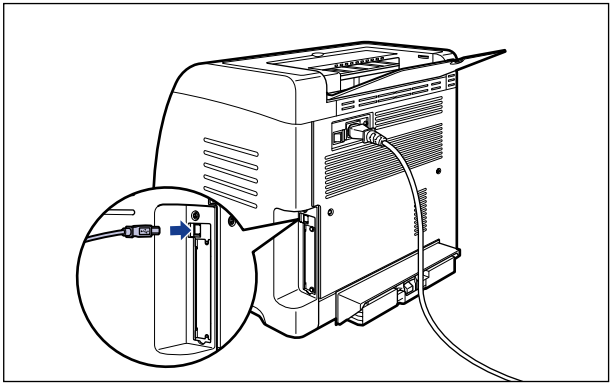

## 3 Connect the A-type (flat) end of the USB cable to the USB port on the computer.

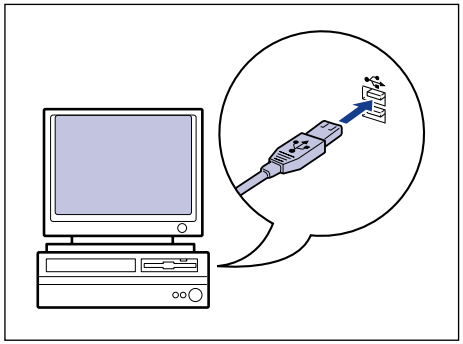

## 4 Press "|" of the power switch to turn the printer ON.

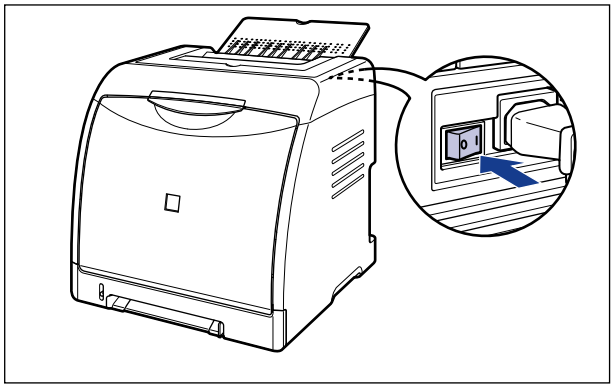

## 5 Turn the computer on and start up Windows XP/Server 2003.

## 6 Log on as a member of Administrators.

NOTE

Full Control Permission is required for the installation of the printer driver.

## 7 Insert the supplied "LBP5100 User Software" CD-ROM into the CD-ROM drive.

If CD-ROM Setup appears, click [Exit].

## ● If the following screen is displayed

❑ Select [Install from a list or specific location (Advanced)], then click [Next].

## ● If the following screen is displayed

❑ Select [No, not this time], then click [Next].

❑ Select [Install from a list or specific location (Advanced)], then click [Next].

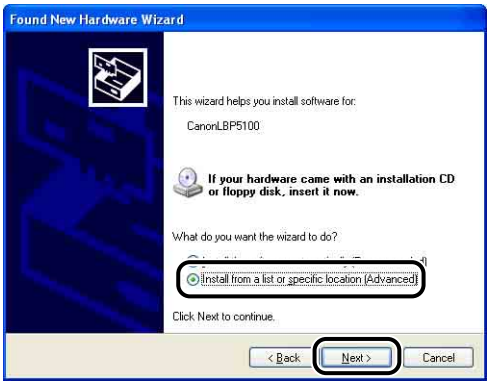

## 8 Select [Search for the best driver in these locations.], clear the [Search removable media (floppy, CD-ROM...)] check box, and then select the [Include this location in the search] check box.

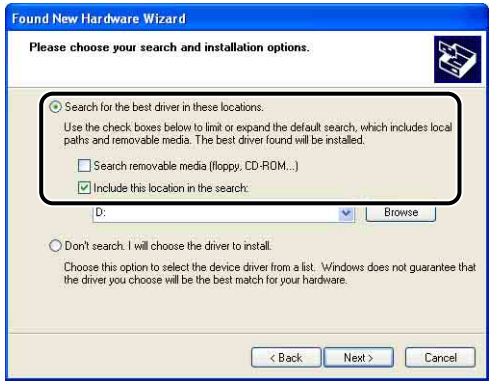


## 9 Click [Browse], then select the folder.

Select [D:\English\Win2K_XP], then click [OK].

The CD-ROM drive name is indicated as "D:" in this manual. The CD-ROM drive name may differ depending on the computer you are using.

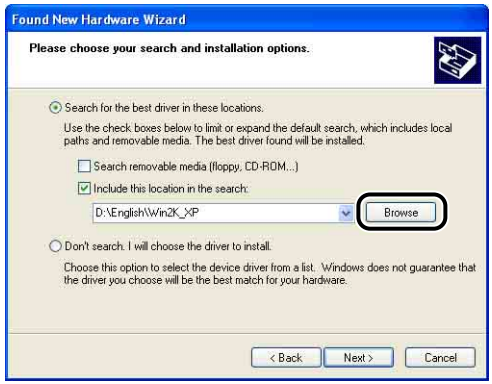

## 10 Make sure that the folder to be browsed is displayed for [Include this location in the search], and then click [Next].

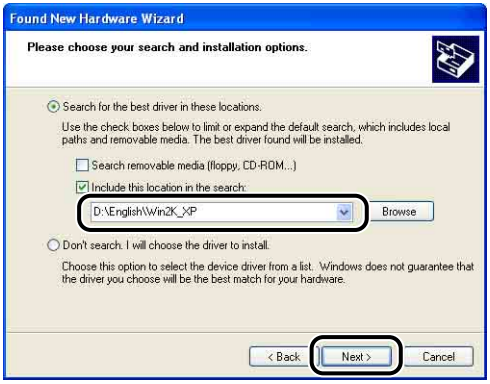


The installation process is displayed.

NOTE

If the [Hardware Installation] dialog box appears, click [Continue Anyway].

## 11 Click [Finish].

IMPORTANT

If you are using a computer with Windows XP Service Pack 2 or another operating system equipped with Windows Firewall as the print server, you need to configure Windows Firewall to unblock communication with the client computers. (See p. 9-15)

The installation of the USB class driver (supplied with an operating system) and the printer driver is completed.

## For Windows 2000

If you are using an operating system other than Windows 2000, see the following.

- For Windows XP/Server 2003 (See p. 4-13)
- For Windows 98/Me (See p. 4-23)

**1** **Make sure that the printer and computer are OFF.**

**2** **Connect the B-type (square) end of the USB cable to the USB connector on the printer.**

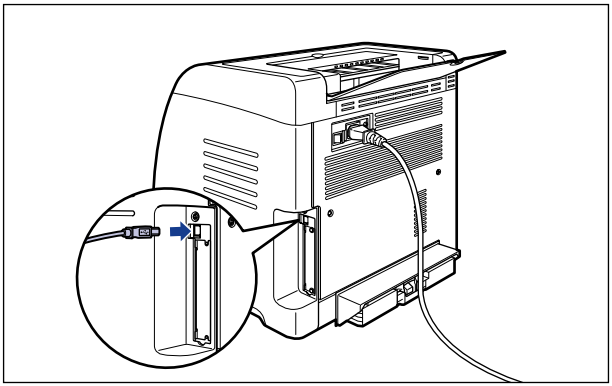

**3** **Connect the A-type (flat) end of the USB cable to the USB port on the computer.**

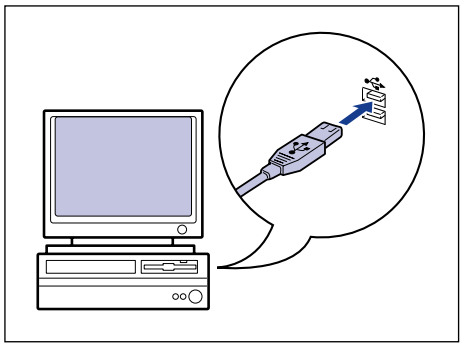

## 4 Press "|" of the power switch to turn the printer ON.

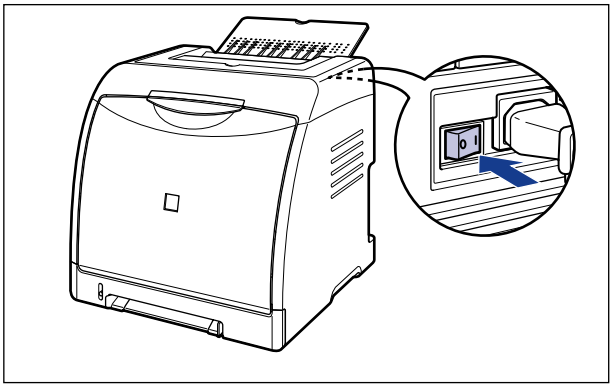

## 5 Turn the computer on and start up Windows 2000.

## 6 Log on as a member of Administrators.

The [Found New Hardware Wizard] dialog box appears.

NOTE

Full Control Permission is required for the installation of the printer driver.

## 7 Click [Next].

## 8 Select [Search for a suitable driver for my device (recommended)], then click [Next].

NOTE

[Unknown] may be displayed as the name of the device.

## 9 Clear the [Floppy disk drives] check box and the [CD-ROM drives] check box, select the [Specify a location] check box, and then click [Next].

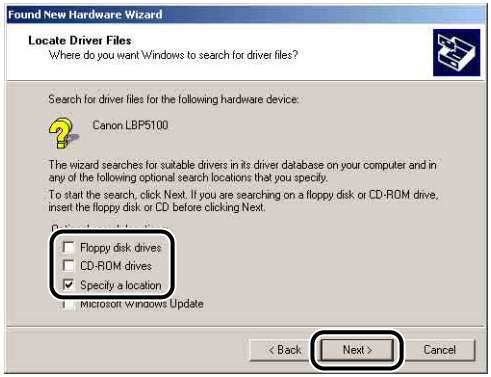

## 10 Insert the supplied "LBP5100 User Software" CD-ROM into the CD-ROM drive, and then click [Browse].

If CD-ROM Setup appears, click [Exit].

## 11 Select [D:\English\Win2K_XP]. Select [CNAC6STK.INF], then click [Open].

The CD-ROM drive name is indicated as "D:" in this manual. The CD-ROM drive name may differ depending on the computer you are using.

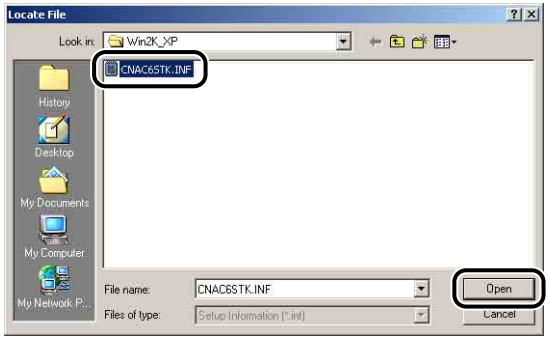


## 12 Make sure that the folder to be browsed is displayed for [Copy manufacturer's files from], and then click [OK].

## 13 Click [Next].

Copying files is started.

NOTE

If the [Digital Signature Not Found] dialog box appears, click [Yes].

## 14 Click [Finish].

The installation of the USB class driver (supplied with an operating system) and the printer driver is completed.

## For Windows 98/Me

If you are using an operating system other than Windows 98/Me, see the following.

- For Windows XP/Server 2003 (See p. 4-13)
- For Windows 2000 (See p. 4-18)

The screen shots used in this section are from Windows Me.

**1** **Make sure that the printer and computer are OFF.**

**2** **Connect the B-type (square) end of the USB cable to the USB connector on the printer.**

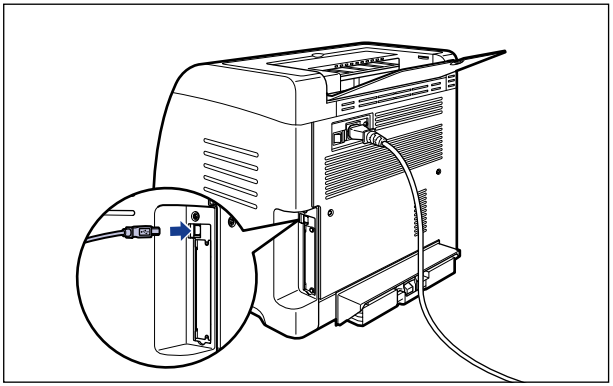

**3** **Connect the A-type (flat) end of the USB cable to the USB port on the computer.**

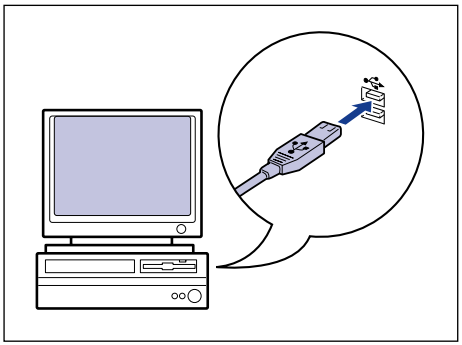

## 4 Press "|" of the power switch to turn the printer ON.

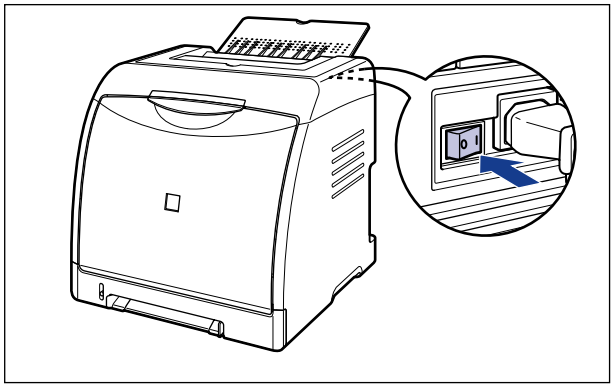

## 5 Turn the computer on and start up Windows 98/Me.

The [Add New Hardware Wizard] dialog box appears.

### ● For Windows Me

If the following dialog box appears, proceed to Step 6.

If the following dialog box appears, proceed to Step 13.

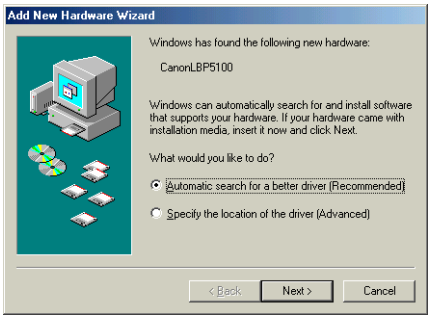

● **For Windows 98**

If the following dialog box appears, click [Next], then proceed to Step 6.

If the following dialog box appears, click [Next], then proceed to Step 13.

## 6 Select [Specify the location of the driver (Advanced)], then click [Next].

For Windows 98: Select [Search for the best driver for your device. (Recommended).], then click [Next].

## 7 Insert the supplied "LBP5100 User Software" CD-ROM into the CD-ROM drive.

If CD-ROM Setup appears, click [Exit].

## 8 Select [Search for the best driver for your device. (Recommended).], clear the [Removable Media (Floppy, CD-ROM...)] check box, and then select the [Specify a location] check box.

For Windows 98: Clear the [Floppy disk drives] check box and the [CD-ROM drives] check box, and then select the [Specify a location] check box.

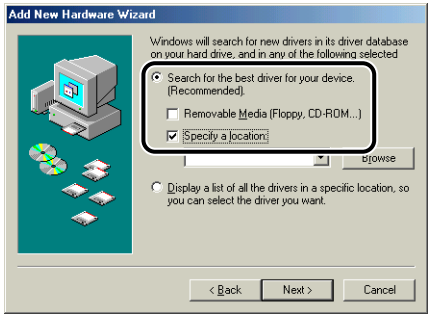


## 9 Click [Browse], then select the folder.

For Windows Me: Select [D:\English\USBPORT\WinMe], and then click [OK].

For Windows 98: Select [D:\English\USBPORT\Win98], and then click [OK].

The CD-ROM drive name is indicated as "D:" in this manual. The CD-ROM drive name may differ depending on the computer you are using.

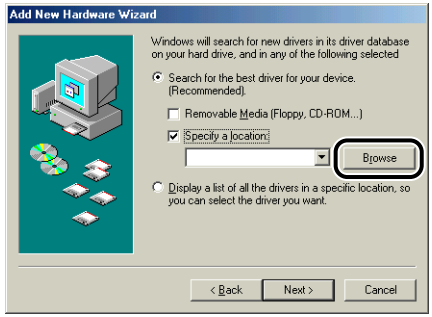

## 10 Make sure that the folder to be browsed is displayed for [Specify a location], and then click [Next].

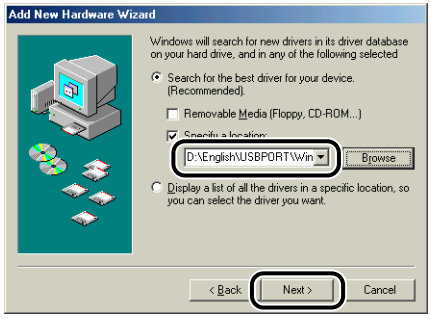


## 11 Click [Next].

Installation of the USB class driver starts.

## 12 Click [Finish].

The printer is detected automatically. Please wait a moment.

The [Add New Hardware Wizard] dialog box appears. For Windows 98, click [Next].

## 13 Select [Specify the location of the driver (Advanced)], then click [Next].

For Windows 98: Select [Search for the best driver for your device. (Recommended).], then click [Next].

## 14 If the supplied "LBP5100 User Software" CD-ROM is not in the CD-ROM drive, insert the "LBP5100 User Software" CD-ROM into the CD-ROM drive.

If CD-ROM Setup appears, click [Exit].

## 15 Select [Search for the best driver for your device. (Recommended).], clear the [Removable Media (Floppy, CD-ROM...)] check box, and then select the [Specify a location] check box.

For Windows 98: Clear the [Floppy disk drives] check box and the [CD-ROM drives] check box, and then select the [Specify a location] check box.

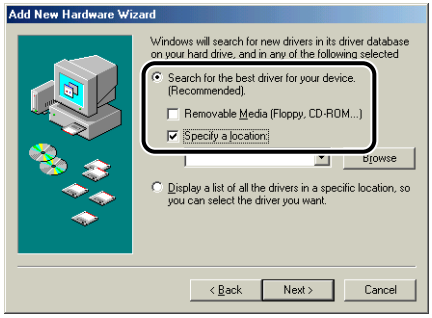


## 16 Click [Browse], then select the folder.

Select [D:\English\Win98_Me], then click [OK].

The CD-ROM drive name is indicated as "D:" in this manual. The CD-ROM drive name may differ depending on the computer you are using.

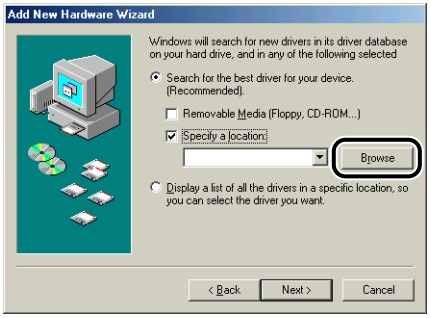

## 17 Make sure that the folder to be browsed is displayed for [Specify a location], and then click [Next].

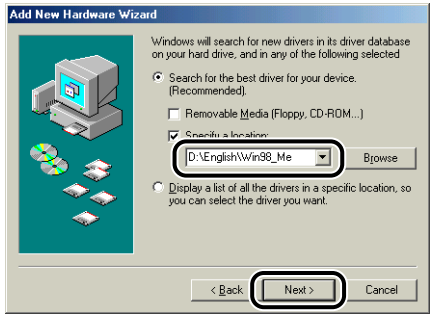


## 18 Click [Next].

## 19 Enter a new name in [Printer name] if you want to change the printer name.

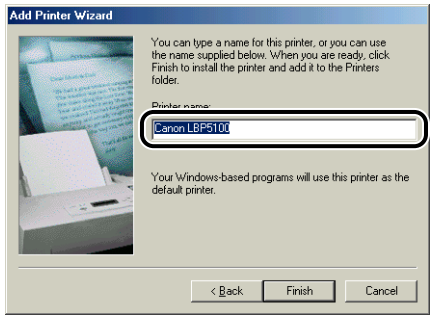


NOTE

If another printer driver has already been installed in the computer, the message <Do you want your Windows-based programs to use this printer as the default printer?> appears. In this case, select [Yes] or [No].

## 20 Click [Finish].

Copying files is started.

## 21 When the dialog box for completing the installation appears, click [OK].

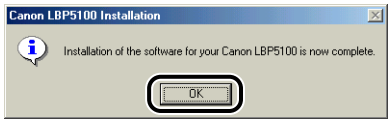


## 22 Click [Finish].

The installation of the USB class driver and the printer driver is completed.

# Installing from [Add Printer Wizard]

NOTE

When installing the CAPT software from [Add Printer Wizard], the USB port for connecting this printer has to have already been registered.

## *For Windows XP/Server 2003*

If you are using an operating system other than Windows XP/Server 2003, see the following.

- For Windows 2000 (See p. 4-39)
- For Windows 98/Me (See p. 4-45)

The screen shots used in this section are from Windows XP.

IMPORTANT

When printing a test page, make sure that the printer is properly connected to the computer and the printer is ON before installing the CAPT software.

---

### 1 Turn the computer on and start up Windows XP/Server 2003.

### 2 Log on as a member of Administrators.

IMPORTANT

If a Wizard appears by the Plug and Play automatic setup, click [Cancel], and then install the CAPT software using this procedure.

NOTE

Full Control Permission is required for the installation of the printer driver.

### 3 Display the [Printers and Faxes] folder.

For Windows XP Professional/Server 2003: From the [Start] menu, select [Printers and Faxes].
For Windows XP Home Edition: From the [Start] menu, select [Control Panel], and then click [Printers and Other Hardware] → [Printers and Faxes].

## 4 Click [Add a printer].

For Windows Server 2003: Double-click [Add Printer].

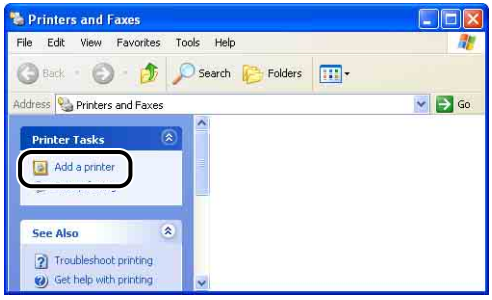


## 5 Click [Next].

## 6 Make sure that [Local printer attached to this computer] is selected, then click [Next].

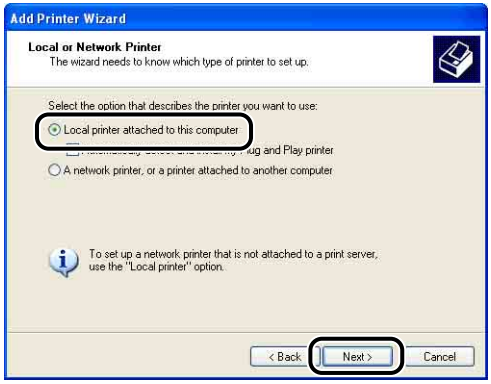

NOTE

Do not select the [Automatically detect and install my Plug and Play printer] check box.

## 7 Make sure that [Use the following port] is selected, select the USB port to which this printer is connected, and then click [Next].

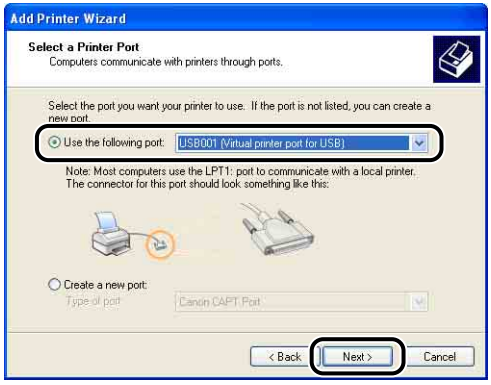


## 8 Click [Have Disk].

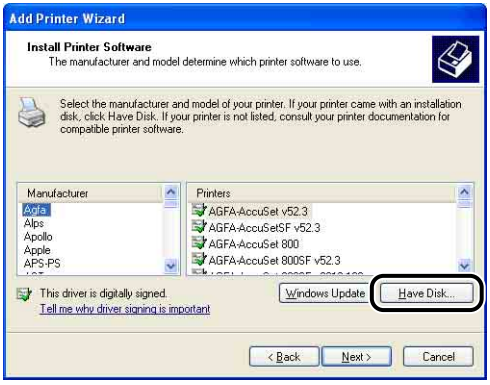

## 9 Insert the supplied "LBP5100 User Software" CD-ROM into the CD-ROM drive, and then click [Browse].

If CD-ROM Setup appears, click [Exit].

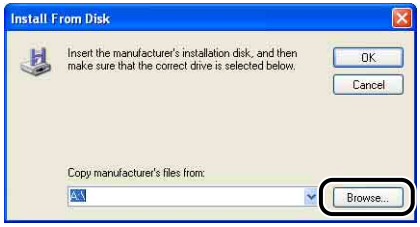


## 10 Select [D:\English\Win2K_XP]. Select [CNAC6STK.INF], then click [Open].

The CD-ROM drive name is indicated as "D:" in this manual. The CD-ROM drive name may differ depending on the computer you are using.

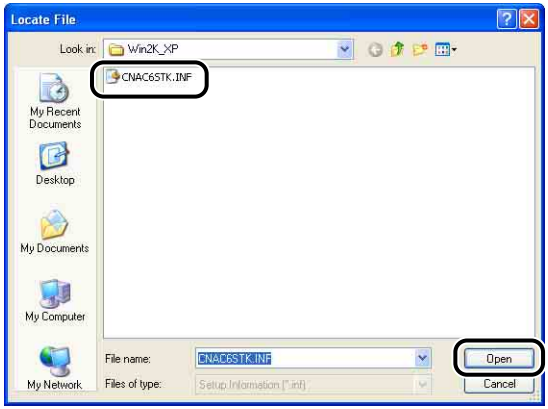


## 11 Confirm the contents of [Copy manufacturer's files from], then click [OK].

For example, when your CD-ROM drive is drive [D:], it is displayed as [D:\English\Win2K_XP].

## 12 Click [Next].

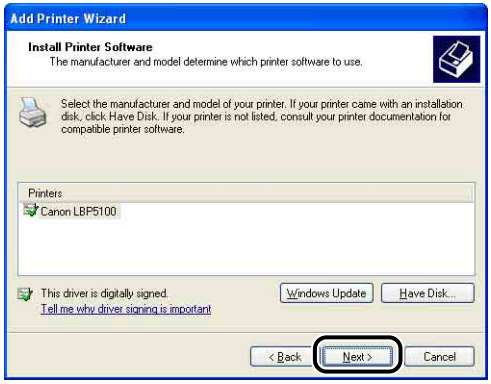


## 13 Enter a new name in [Printer name] if you want to change the printer name, then click [Next].

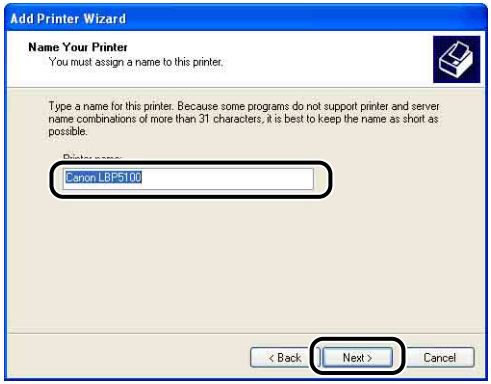


NOTE

If another printer driver has already been installed in the computer, the message <Do you want to use this printer as the default printer?> appears. In this case, select [Yes] or [No].

## 14 Click [Next].

NOTE

When sharing this printer on a network, select [Share name], and then click [Next]. The window for entering [Location] and [Comment] is displayed. Enter them as needed, then click [Next].

## 15 When printing a test page, click [Yes], then click [Next].

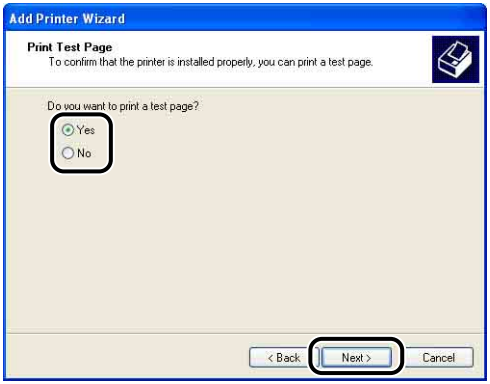

## 16 Click [Finish].

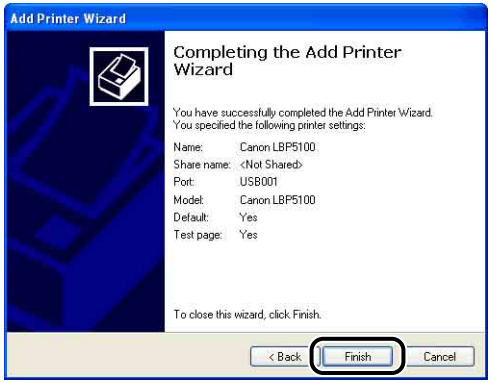


Copying files is started.

When printing a test page, a dialog box will appear after printing. Click [OK] to close the dialog box.

NOTE

If the [Hardware Installation] dialog box appears, click [Continue Anyway].

## 17 If the printer and computer are not connected, turn the computer off, connect the computer and printer with a USB cable, and then turn them ON.

IMPORTANT

If you are using a computer with Windows XP Service Pack 2 or another operating system equipped with Windows Firewall as the print server, you need to configure Windows Firewall to unblock communication with the client computers. (See p. 9-15)

The installation of the printer driver is completed.

## For Windows 2000

If you are using an operating system other than Windows 2000, see the following.

- For Windows XP/Server 2003 (See p. 4-32)
- For Windows 98/Me (See p. 4-45)

IMPORTANT

When printing a test page, make sure that the printer is properly connected to the computer and the printer is ON before installing the CAPT software.

**1** **Turn the computer on and start up Windows 2000.**

**2** **Log on as a member of Administrators.**

IMPORTANT

If a Wizard appears by the Plug and Play automatic setup, click [Cancel], and then install the CAPT software using this procedure.

NOTE

Full Control Permission is required for the installation of the printer driver.

**3** **From the [Start] menu, select [Settings] → [Printers] to open the [Printers] folder. Then, double-click [Add Printer].**

**4** **Click [Next].**

## 5 Make sure that [Local printer] is selected, then click [Next].

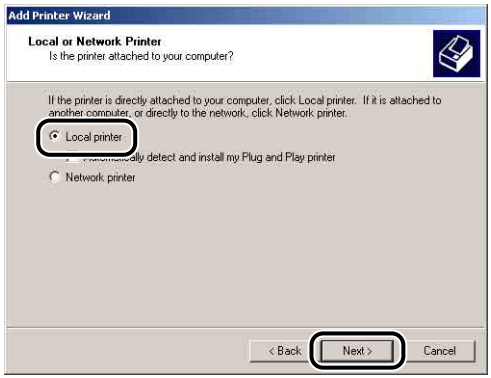


NOTE

Do not select the [Automatically detect and install my Plug and Play printer] check box.

## 6 Select the USB port for connecting this printer, and then click [Next].

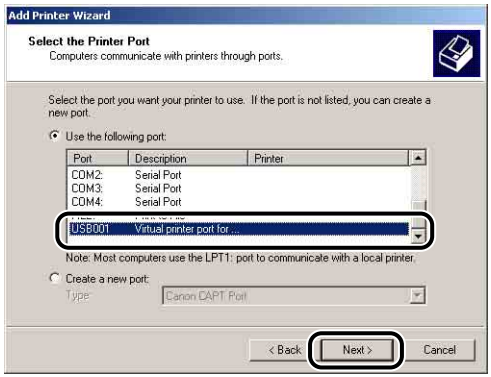

## 7 Click [Have Disk].

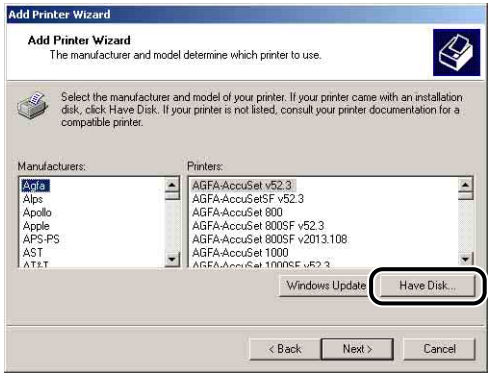


## 8 Insert the supplied "LBP5100 User Software" CD-ROM into the CD-ROM drive, and then click [Browse].

If CD-ROM Setup appears, click [Exit].

## 9 Select [D:\English\Win2K_XP]. Select [CNAC6STK.INF], then click [Open].

The CD-ROM drive name is indicated as "D:" in this manual. The CD-ROM drive name may differ depending on the computer you are using.

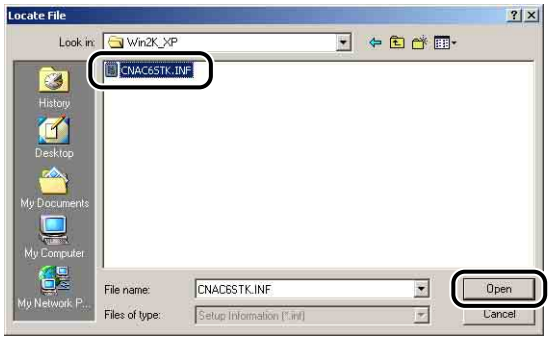

## 10 Confirm the contents of [Copy manufacturer's files from], then click [OK].

For example, when your CD-ROM drive is drive [D:], it is displayed as [D:\English\Win2K_XP].

## 11 Click [Next].

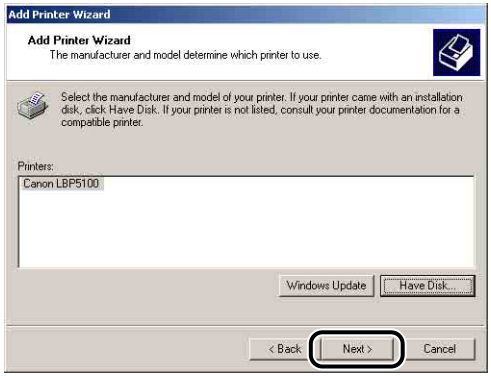


## 12 Enter a new name in [Printer name] if you want to change the printer name, then click [Next].

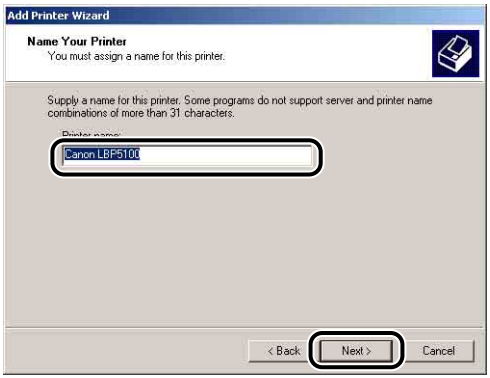

NOTE

If another printer driver has already been installed in the computer, the message <Do you want your Windows-based programs to use this printer as the default printer?> appears. In this case, select [Yes] or [No].

## 13 Click [Next].

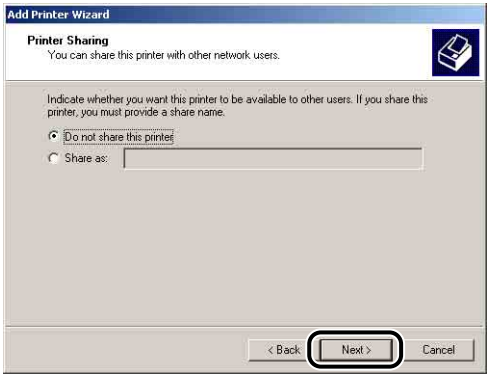


NOTE

When sharing this printer on a network, select [Share as], and then click [Next]. The window for entering [Location] and [Comment] is displayed. Enter them as needed, then click [Next].

## 14 When printing a test page, click [Yes], then click [Next].

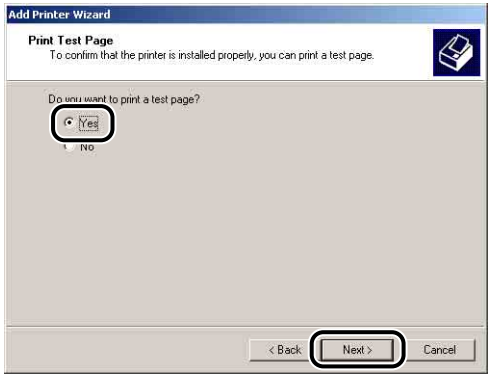

## 15 Click [Finish].

Copying files is started.

When printing a test page, a dialog box will appear after printing. Click [OK] to close the dialog box.

NOTE

If the [Digital Signature Not Found] dialog box appears, click [Yes].

## 16 If the printer and computer are not connected, turn the computer off, connect the computer and printer with a USB cable, and then turn them ON.

The installation of the printer driver is completed.

## For Windows 98/Me

If you are using an operating system other than Windows 98/Me, see the following.

- For Windows XP/Server 2003 (See p. 4-32)
- For Windows 2000 (See p. 4-39)

The screen shots used in this section are from Windows Me.

### 1 From the [Start] menu, select [Settings] → [Printers] to open the [Printers] folder. Then, double-click [Add Printer].

The [Add Printer Wizard] dialog box is displayed.

NOTE

The [Add Printer Wizard] dialog box can also be displayed using the following procedure:

- Double-click [My Computer] → [Control Panel] → [Printers] → [Add Printer] (For Windows Me).
- Double-click [My Computer] → [Printers] → [Add Printer] (For Windows 98).

### 2 Click [Next].

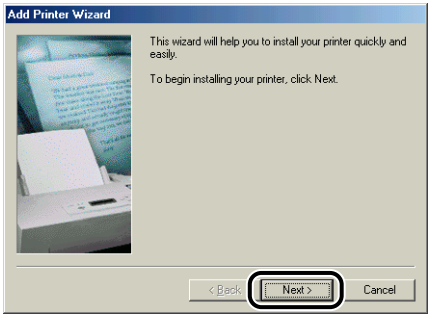

## 3 Select [Local printer], then click [Next].

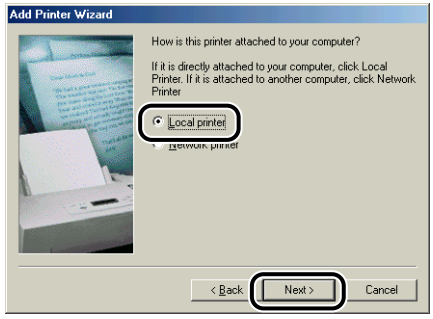


NOTE

This screen does not appear when the network settings have not been configured.

## 4 Click [Have Disk].

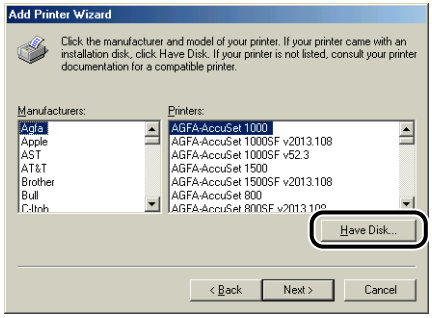


## 5 Insert the supplied "LBP5100 User Software" CD-ROM into the CD-ROM drive, and then click [Browse].

If CD-ROM Setup appears, click [Exit].

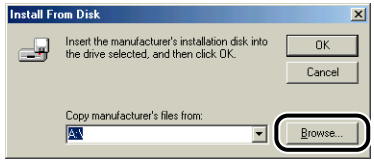

## 6 Select [D:\English\Win98_Me], then click [OK].

The CD-ROM drive name is indicated as "D:" in this manual. The CD-ROM drive name may differ depending on the computer you are using.

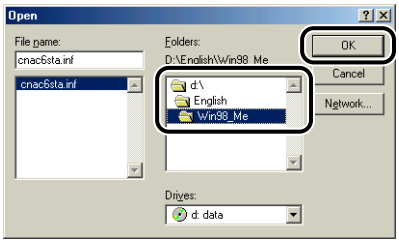


## 7 Confirm the contents of [Copy manufacturer's files from], then click [OK].

For example, when your CD-ROM drive is drive [D:], it is displayed as [D:\English\Win98_Me].

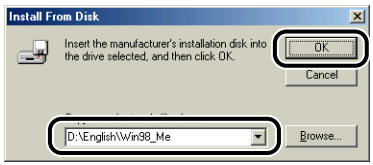


## 8 Select the name of this printer for [Printers], then click [Next].

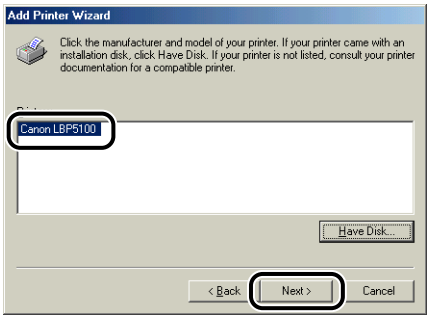

## 9 Select the USB port for connecting this printer, and then click [Next].

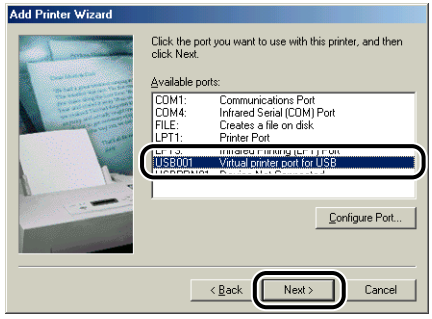


## 10 Enter a new name in [Printer name] if you want to change the printer name.

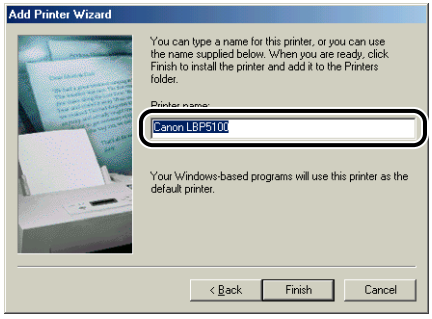


NOTE

If another printer driver has already been installed in the computer, the message <Do you want your Windows-based programs to use this printer as the default printer?> appears. In this case, select [Yes] or [No].

## 11 Click [Finish].

Copying files is started.

**12** **When the dialog box for completing the installation appears, click [OK].**

**13** **If the printer and computer are not connected, turn the computer off, connect the computer and printer with a USB cable, and then turn them ON.**

The installation of the printer driver is completed.

# After Completing Installation

When the installation of the CAPT software is completed, an icon and folder for this printer will be created.

## For Windows XP/Server 2003

- The icon for this printer is displayed in the [Printers and Faxes] folder.

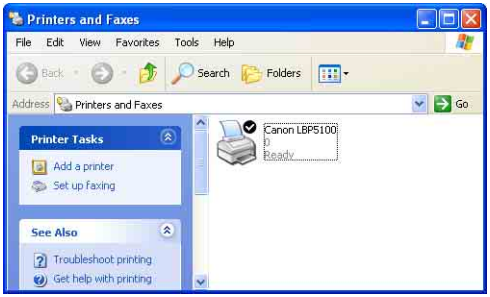


- [Canon Printer Uninstaller] is added to [All Programs] under the [Start] menu.

- If the manuals are installed, [LBP5100 Online Manuals] is created on the desktop, and [LBP5100 Online Manuals] under [Canon LBP5100] is added to [All Programs] under the [Start] menu.

- The icon for the printer is displayed in the [Printers] folder.

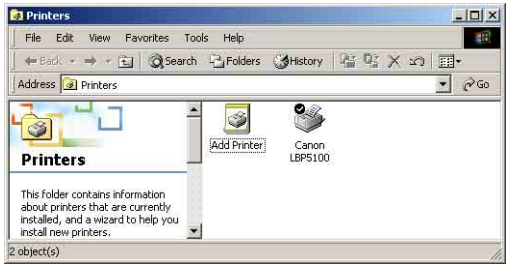


- [Canon Printer Uninstaller] is added to [Programs] under the [Start] menu.

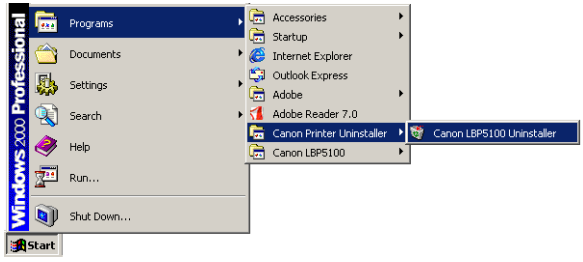


- If the manuals are installed, [LBP5100 Online Manuals] is created on the desktop, and [LBP5100 Online Manuals] under [Canon LBP5100] is added to [Programs] under the [Start] menu.

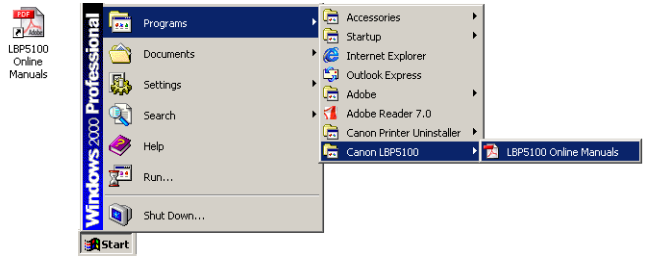

# Checking the Operations by Configuration Page Print

Before using the printer for the first time, be sure to perform Configuration Page Print to check the operations using the following procedure. Configuration Page Print prints the optional settings of the printer, settings for [Device Settings] in the [Options] menu in the Printer Status Window, and the current printer status, such as [Number of Total Printed Pages].

NOTE

- Configuration Page Print is designed to be printed on A4 size paper. Load A4 size paper.
- The screen shots used in this section are from Windows XP Professional.



## 1 Display the [Printers and Faxes] folder or the [Printers] folder.

For Windows 98/Me/2000: From the [Start] menu, select [Settings] → [Printers].
For Windows XP Professional/Server 2003: From the [Start] menu, select [Printers and Faxes].
For Windows XP Home Edition: From the [Start] menu, select [Control Panel], and then click [Printers and Other Hardware] → [Printers and Faxes].

## 2 Select the icon for this printer, then select [Printing Preferences] from the [File] menu.

For Windows 98/Me: Select the icon for this printer, then select [Properties] from the [File] menu.

## 3 Display the [Page Setup] sheet, then click [ ] (Display Printer Status Window) to run the Printer Status Window.

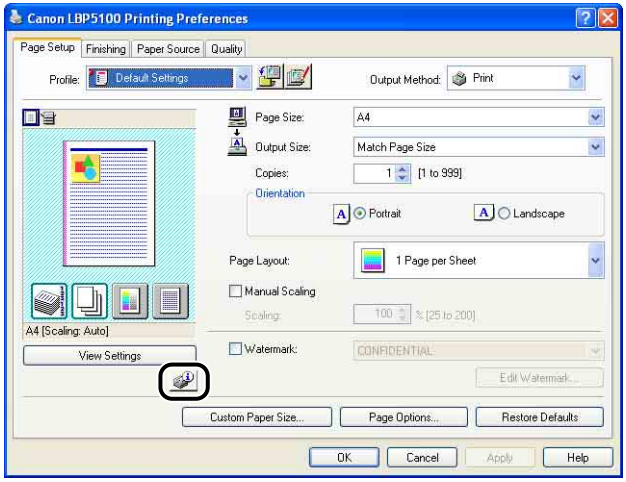


NOTE

For details on the Printer Status Window, see "Printer Status Window," on p. 5-89.

## 4 From the [Options] menu, select [Utility] → [Configuration Page Print].

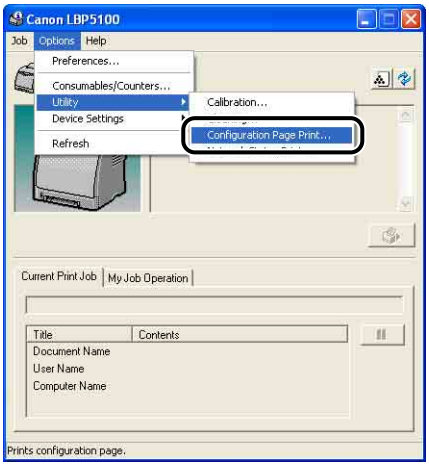

## 5 Click [OK].

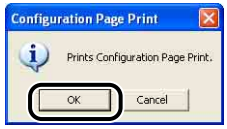


Configuration Page Print is printed.

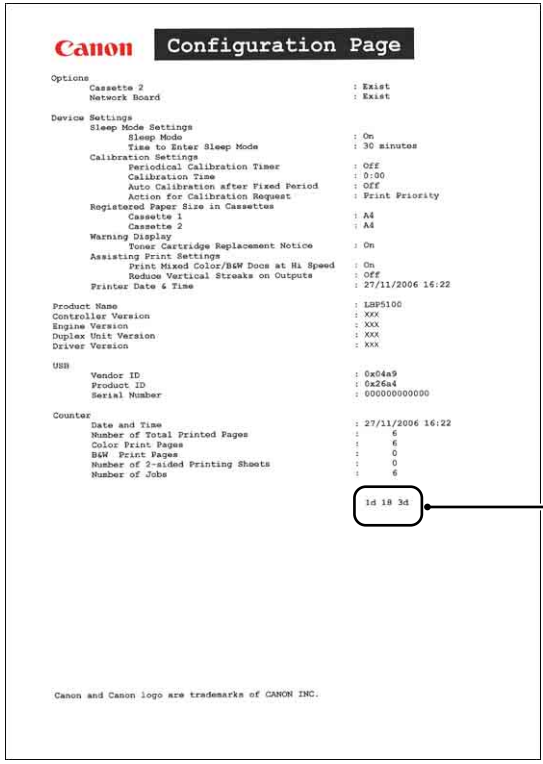

Canon Configuration Page

```
Options
        Cassette 2                                      : Exist
        Network Board                                   : Exist

Device Settings
        Sleep Mode Settings
                Sleep Mode                              : On
                Time to Enter Sleep Mode                : 30 minutes
        Calibration Settings
                Periodical Calibration Timer            : Off
                Calibration Time                        : 0:00
                Auto Calibration after Fixed Period     : Off
                Action for Calibration Request          : Print Priority
        Registered Paper Size in Cassettes
                Cassette 1                              : A4
                Cassette 2                              : A4
        Warning Display
                Toner Cartridge Replacement Notice      : On
        Assisting Print Settings
                Print Mixed Color/B&W Docs at Hi Speed  : On
                Reduce Vertical Streaks on Outputs      : Off
        Printer Date & Time                             : 27/11/2006 16:22

Product Name                                            : LBP5100
Controller Version                                      : XXX
Engine Version                                          : XXX
Duplex Unit Version                                     : XXX
Driver Version                                          : XXX

USB
        Vendor ID                                       : 0x04a9
        Product ID                                      : 0x26a4
        Serial Number                                   : 000000000000

Counter
        Date and Time                                   : 27/11/2006 16:22
        Number of Total Printed Pages                   :      6
        Color Print Pages                               :      6
        B&W  Print Pages                                :      0
        Number of 2-sided Printing Sheets               :      0
        Number of Jobs                                  :      6

                                                        1d 18 3d

Canon and Canon logo are trademarks of CANON INC.
```

The six-digit alphanumeric printed here is required for receiving service or repairs. It is not required for using the printer as normal.

### IMPORTANT

This is a sample of Configuration Page Print. The contents may differ from the Configuration Page Print printed by your printer.

### NOTE

If Configuration Page Print is not printed properly, see "Chapter 7 Troubleshooting".

# Printing from a Network Computer by Sharing the Printer on a Network

When you share this printer on a network, you can use it as a network printer, which enables printing from other computers that are not directly connected to this printer.

If this printer is going to be used by multiple computers on a network, perform the following configuration. In this manual, the computer directly connected to the printer is called "print server", and the other computers which use the printer via the network are called "clients".

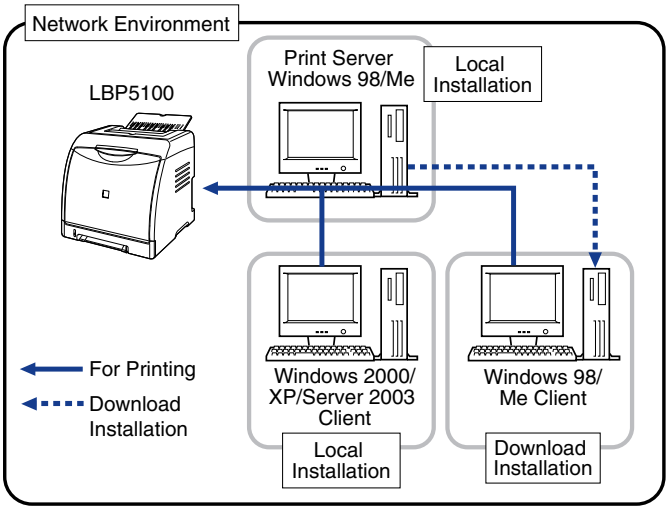


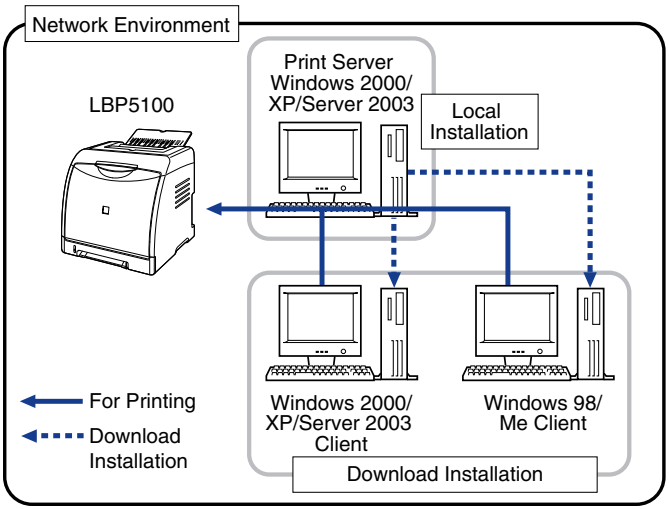

* Download installation is to download the printer driver from the print server to client computers and install it without using the supplied CD-ROM when an additional driver (alternate driver) is installed on the print server.

When using a print server, perform the following settings:

| | Setting | See |
|---|---|---|
| 1 | **Install the printer driver on the print server** | |
| | - When the printer and print server are connected by the USB cable | See p. 4-4 |
| | - When the optional network board is installed and the printer and print server are connected by the LAN cable | See Network Guide |
| 2 | **Print Server Settings** | See p. 4-56 |
| 3 | **Installation on Clients** | See p. 4-63 |

NOTE

Using this printer on your network requires that both the print server and clients should be using Windows 98/Me or Windows 2000/XP/Server 2003.

## Print Server Settings

This section describes the procedure assuming that the print server is running Windows 2000/XP/Server 2003.

NOTE

- If you configure the sharing function of the print server or clients that are running Windows 98/Me, use the following procedure.

  1. Double-click [My Computer] → [Control Panel] → the [Network] icon.
  2. Display the [Configuration] sheet, then click [Add].
  3. Select the [Service] icon, then click [Add].
  4. Select [File and printer sharing for Microsoft Networks], then click [OK].
  5. Click [File and Print Sharing], make sure that [I want to be able to allow others to print to my printer(s).] is selected, then click [OK].
  6. Display the [Access Control] sheet, select [Share-level access control] or [User-level access control], and then click [OK] to restart Windows.
  7. After Windows restarts, from the [Start] menu, select [Settings] → [Printers].
  8. Right-click the icon for this printer, then select [Sharing] from the pop-up menu.
  9. Select [Shared As]. Change [Share Name] if you want to, then enter [Comment] and [Password] as needed.
  10. Click [OK].

- The screen shots used in this section are from Windows XP Professional.

## ■ Preparing the Printer Sharing Settings

### 1 From the [Start] menu, select [Control Panel], and then click [Network and Internet Connections] → [Network Connections].

For Windows 2000: From the [Start] menu, select [Settings] → [Network and Dial-up Connections].
For Windows Server 2003: From the [Start] menu, select [Control Panel] → [Network Connections] → [Local Area Connection], click [Properties], and then proceed to Step 3.

For Windows 2000: The [Network and Dial-up Connections] folder is displayed.
For Windows XP: The [Network Connections] folder is displayed.

### 2 Right-click the [Local Area Connection] icon, then select [Properties] from the pop-up menu.

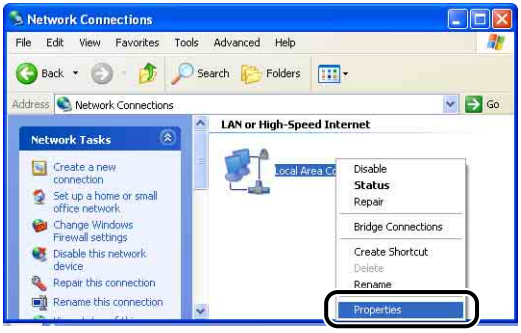

## 3 Make sure that [File and Printers Sharing for Microsoft Networks] is selected, then click [OK].

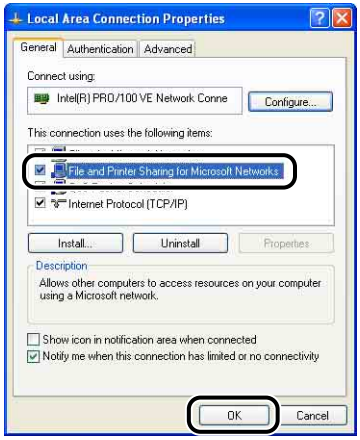


### ■ *Printer Sharing Settings*

NOTE

For Windows XP, the printer cannot be shared on a network at the default settings (the settings immediately after the installation).
Printer sharing settings require running [Network Setup Wizard] to enable the sharing settings.
For more details, see Windows online Help.

## 1 Display the [Printers and Faxes] folder or the [Printers] folder.

For Windows 2000: From the [Start] menu, select [Settings] → [Printers].
For Windows XP Professional/Server 2003: From the [Start] menu, select [Printers and Faxes].
For Windows XP Home Edition: From the [Start] menu, select [Control Panel], and then click [Printers and Other Hardware] → [Printers and Faxes].

## 2 Right-click the icon for this printer, then select [Sharing] from the pop-up menu.

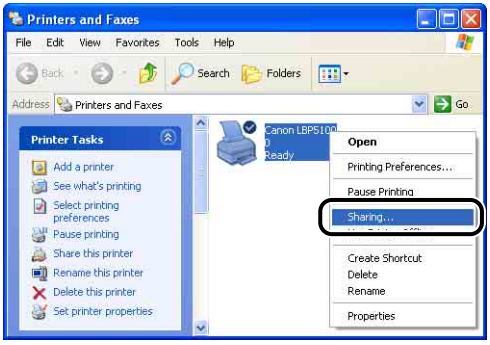


## 3 Select [Share this printer]. Change the share name as needed.

For Windows 2000: Select [Shared as].

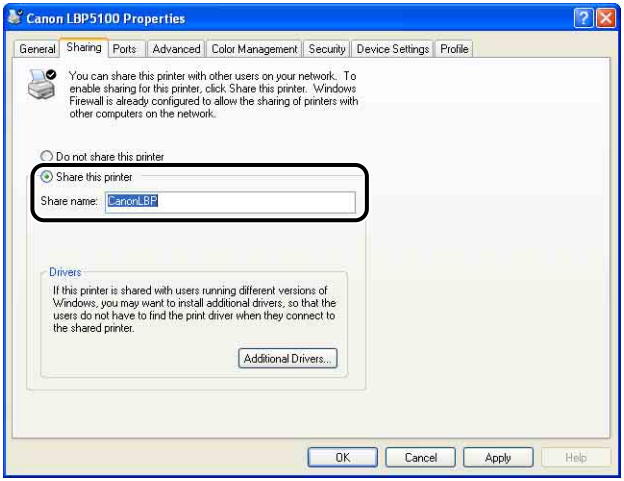


NOTE

- You can also specify the sharing settings during the local installation.
- Do not enter blank or special characters for the share name.

## 4 If any client is using Windows 98/Me, click [Additional Drivers], and then proceed to the next step. If no client is using Windows 98/Me, proceed to Step 8.

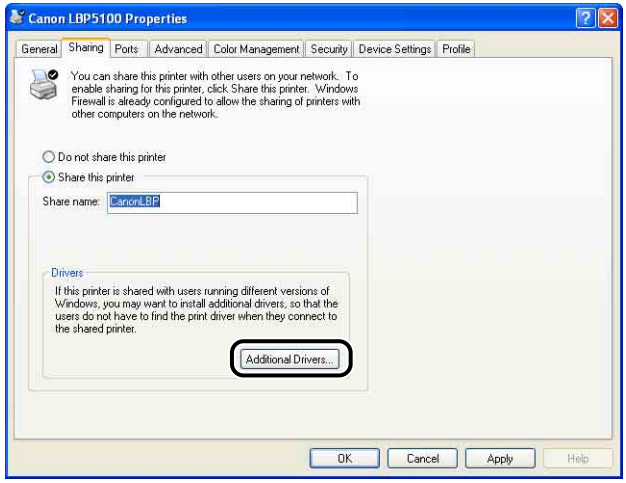


NOTE

To update the additional driver (alternate driver), uninstall the printer driver used in the print server, install the new printer driver, and then see "Print Server Settings" (p. 4-56) and install the additional driver again.

## 5 Select the [Windows 95, 98 and Me] check box, then click [OK].

For Windows 2000: Select the [Windows 95 or 98] check box, then click [OK].
For Windows Server 2003: Select the [Windows 95, Windows 98, and Windows Millennium Edition] check box, then click [OK].

## 6 Insert the supplied "LBP5100 User Software" CD-ROM into the CD-ROM drive.

If the [Insert Disk] dialog box appears, click [OK].

## 7 Click [Browse]. When your CD-ROM drive is drive [D:], select [D:\English\Win98_Me], and then click [OK].

Copying files is started.

## 8 Click [OK] or [Close].

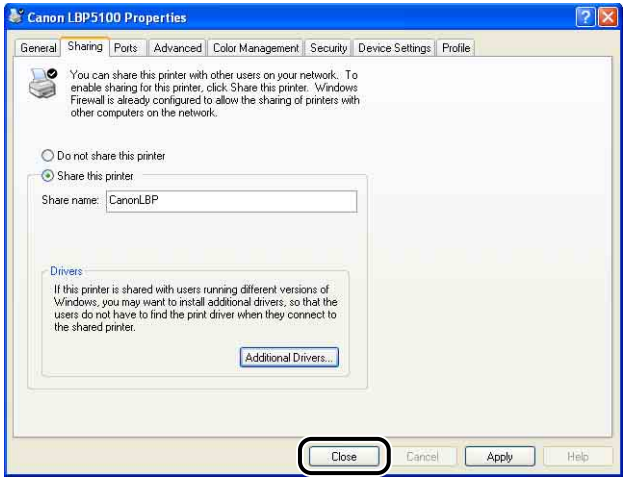


The printer icon changes to the shared printer icon.

IMPORTANT

To clear the printer sharing settings, select [Do not share this printer] ([Not shared] for Windows 2000) in the [Sharing] sheet. If you cleared the printer sharing settings with Windows XP Service Pack 2 or another operating system equipped with Windows Firewall, you need to delete the settings registered in Windows Firewall using the utility software. (See p. 9-15)

## ■ *Configuring Windows Firewall*

If you are using Windows XP Service Pack 2 or another operating system equipped with Windows Firewall as the print server, you need to configure Windows Firewall to allow communication with the client computers.

Use the following procedure to ensure that Windows Firewall does not block this communication.

- If you installed the CAPT software from CD-ROM Setup, a [Warning] dialog box was displayed.

- If you clicked [Yes], Windows Firewall was configured to allow communication with the client computers.
- If you clicked [No], however, Windows Firewall was configured to block communication with the client computers, and you will need to use the following method to clear that block.

**1.** From the [Start] menu, select [Control Panel], and then click [Network and Internet Connections] → [Windows Firewall].

2. In the [Exceptions] sheet in the [Windows Firewall] dialog box, select the [Canon LBP5100 RPC Server Process] check box, and then click [OK].

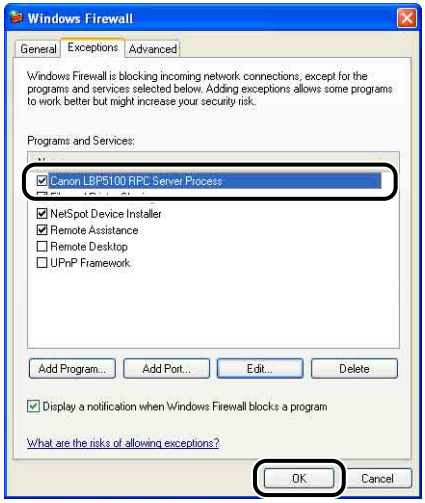


- If you installed the CAPT software by any method other than CD-ROM Setup, you need to configure Windows Firewall to unblock communication with the client computers using the utility software. (See p. 9-15)

# Installation on Clients

This section describes the procedure for installing the printer driver on a client computer.

There are two ways to install the printer driver: local installation and download installation.

## ■ Local Installation (See p. 4-64)

Installing the printer driver using the supplied CD-ROM.

## ■ Download Installation

Installing the printer driver without using the supplied CD-ROM, but by downloading the printer driver from the print server. There are the following two ways to download and install the printer driver:

- Installing from [Add Printer Wizard] (See p. 4-71)
- Installing from [Windows Explorer] (See p. 4-74)

IMPORTANT

- If you are using Windows 2000/XP/Server 2003, be sure to log on as a member of Administrators when starting up.

- If you are using Windows XP Service Pack 2 or another operating system equipped with Windows Firewall on a client computer, configure the following settings. If you do not perform the following settings on the client computers, the printer status may not be displayed properly in the Printer Status Window, and some of the printer functions may not operate properly.

1. From the [Start] menu, select [Control Panel], and then click [Network and Internet Connections] → [Windows Firewall].
2. In the [Exceptions] sheet in the [Windows Firewall] dialog box, select the [File and Printer Sharing] check box, and then click [OK].

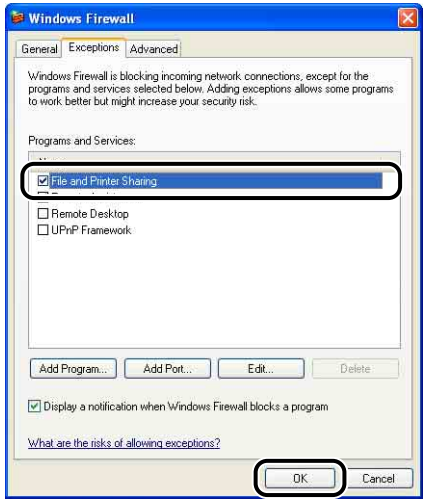


NOTE

- Clients can use either Windows 98/Me or Windows 2000/XP/Server 2003.
- If your print server is Windows 98/Me, you cannot download and install the driver on Windows 2000/XP/Server 2003.
- The screen shots used in this section are from Windows XP Professional.

## Installing from CD-ROM Setup

### 1 Insert the supplied "LBP5100 User Software" CD-ROM into the CD-ROM drive.

If the CD-ROM is already in the drive, eject the disk and re-insert it into the drive.

IMPORTANT

If CD-ROM Setup does not appear, select [Run] from the [Start] menu, enter "D:\English\MInst.exe", and then click [OK]. (The CD-ROM drive name is indicated as "D:" in this manual. The CD-ROM drive name may differ depending on the computer you are using.)

## 2 Click [Easy Installation] or [Custom Installation].

[Easy Installation] allows you to install the printer driver and the instruction manuals simultaneously. If you do not install the manuals, select [Custom Installation].

## 3 Click [Install].

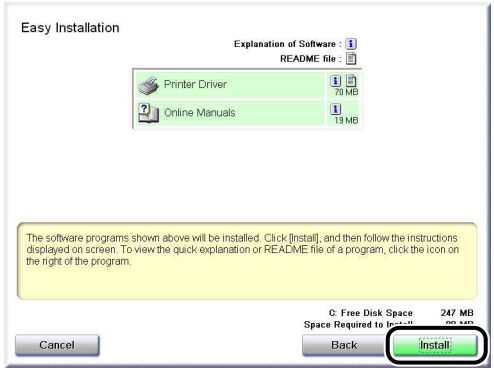

If you selected [Custom Installation] in Step 2, clear the [Online Manuals] check box, and then click [Install].

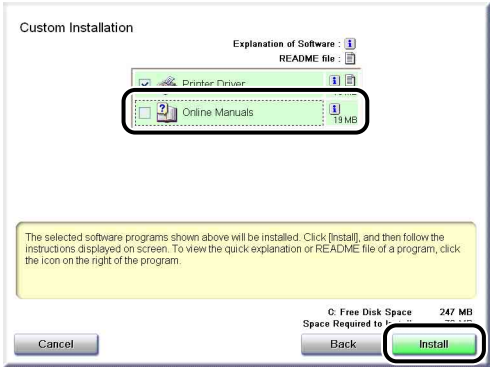


## 4 Confirm the contents, then click [Yes].

## 5 Click [Next].

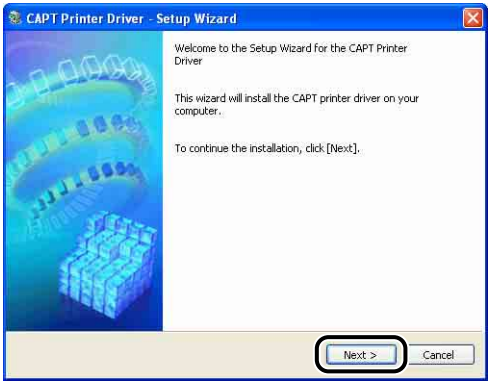

## 6 Select [Manually Set Port to Install], then click [Next].

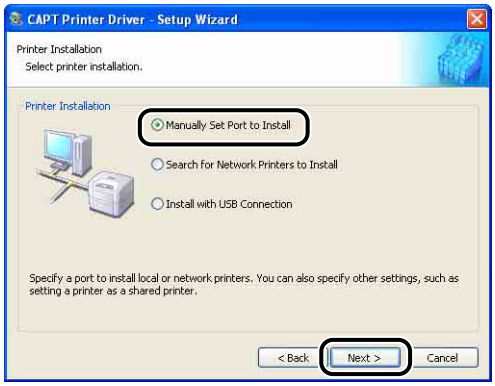


## 7 Click [Add Port].

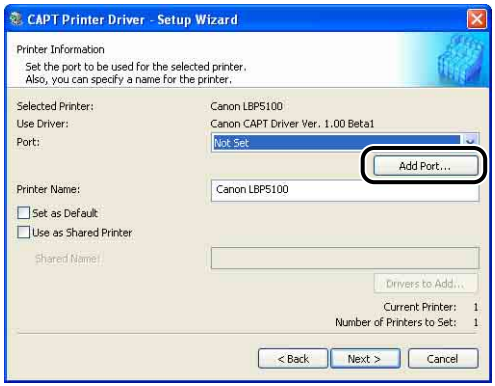


## 8 Select [Network], then click [OK].

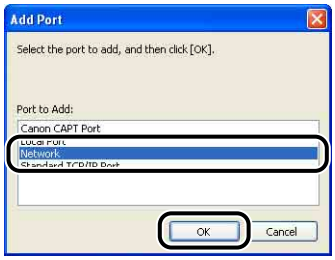

## 9 Select the icon for the shared printer in the print server, then click [OK].

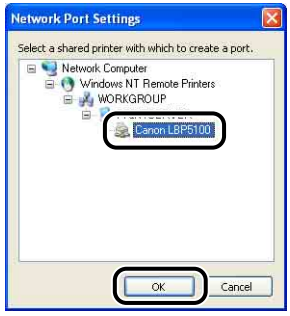


## 10 Select whether or not to use this printer as the default printer, then click [Next].

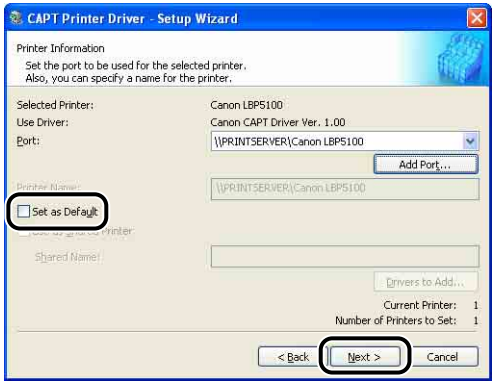


## 11 Click [Start].

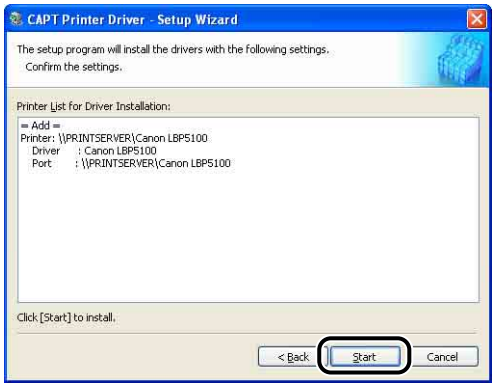

If you are using Windows XP Service Pack 2 or another operating system equipped with Windows Firewall, the following screen is displayed. Click [No].

Select [Yes] only when the computer on which you are currently installing the printer driver is to be used as a print server.

## 12 The message <Installation cannot be stopped once it starts. Do you want to continue?> appears. Click [Yes].

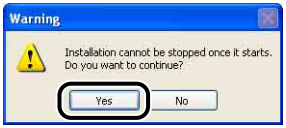


Installation of the printer driver starts.

NOTE

Depending on the system environment, it may take a long time to complete the installation.

## 13 If [Easy Installation] is selected in Step 2, the manuals are installed.

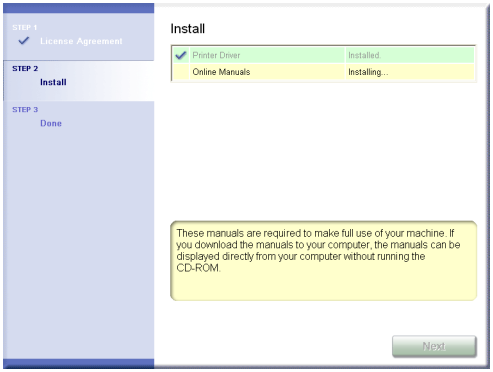

## 14 Confirm the installation results, then click [Next].

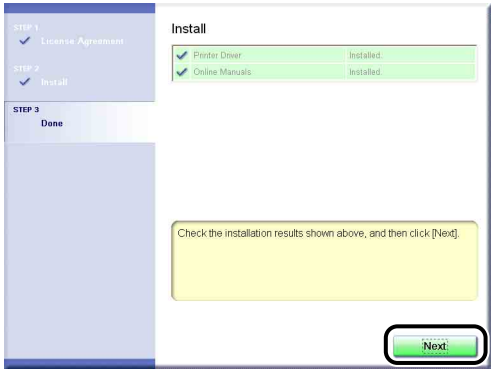


NOTE

If the printer driver is not installed properly, see "Installation Problems," on p. 7-39.

## 15 Select the [Restart Computer Now (Recommended)] check box, then click [Restart].

Windows restarts.

IMPORTANT

If you are using Windows XP Service Pack 2 or another operating system equipped with Windows Firewall on the client computers, configure Windows Firewall to unblock communication with the print server. If you do not clear the block, the printer status may not be displayed properly in the Printer Status Window, and some of the printer functions may not operate properly. (See p. 9-14)

## Installing from [Add Printer Wizard]

### 1 Display the [Printers and Faxes] folder or the [Printers] folder.

For Windows 98/Me/2000: From the [Start] menu, select [Settings] → [Printers].
For Windows XP Professional/Server 2003: From the [Start] menu, select [Printers and Faxes].
For Windows XP Home Edition: From the [Start] menu, select [Control Panel], and then click [Printers and Other Hardware] → [Printers and Faxes].

### 2 Display the [Add Printer Wizard] dialog box.

For Windows 98/Me/2000: Double-click [Add Printer].
For Windows XP Professional/Home Edition: Click [Add a printer].
For Windows Server 2003: Double-click [Add Printer].

### 3 Click [Next].

## 4 Select [A network printer, or a printer attached to another computer], then click [Next].

For Windows 98/Me/2000: Select [Network printer] then click [Next].

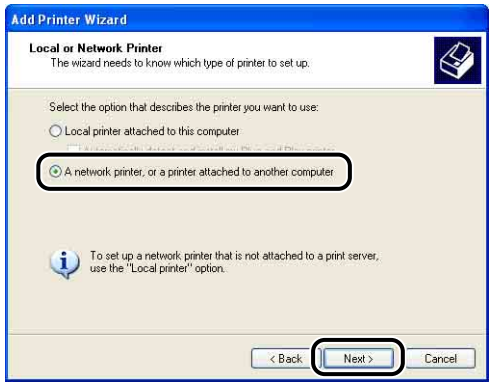


## 5 Select [Connect to this printer (or to browse for a printer, select this option and click Next)], then click [Next].

For Windows 98/Me, click [Browse].

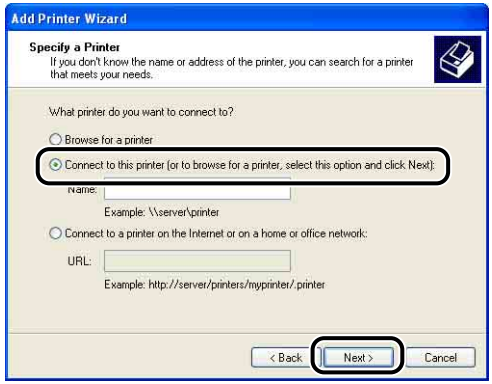

## 6 Select the directory of the print server, then click [Next].

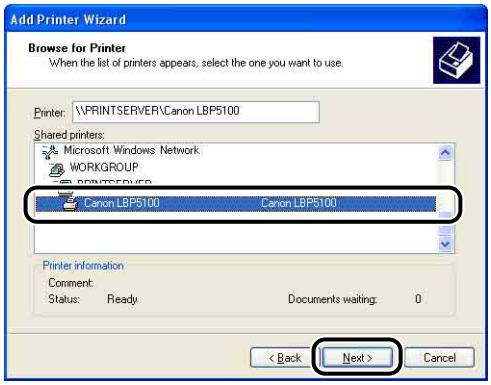


For Windows 98/Me: Proceed to Step 8.

NOTE

- If you are using Windows XP/Server 2003 and the [Connect to Printer] dialog box appears, follow the directions in the message.
- When specifying the path to the network using "\" directly, specify it as "\\the print sever name (the computer name of the print server)\the printer name".

## 7 Select whether or not to use this printer as the default printer, then click [Next].

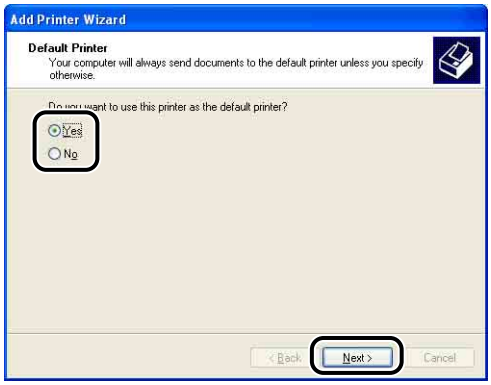

## 8 Click [Finish].

IMPORTANT

If you are using Windows XP Service Pack 2 or another operating system equipped with Windows Firewall on the client computers, configure Windows Firewall to unblock communication with the print server. If you do not clear the block, the printer status may not be displayed properly in the Printer Status Window, and some of the printer functions may not operate properly. (See p. 9-14)

### Installing from [Windows Explorer]

## 1 From the [Start] menu, select [All Programs] → [Accessories] → [Windows Explorer].

For Windows Me/2000: From the [Start] menu, select [Programs] → [Accessories] → [Windows Explorer].
For Windows 98: From the [Start] menu, select [Programs] → [Windows Explorer].

## 2 Select the print server from [My Network Places] (from [Network Neighborhood] for Windows 98), then double-click the icon for this printer.

Alternatively, you can drag and drop the icon for the printer into the [Printers and Faxes] folder or [Printers] folder.

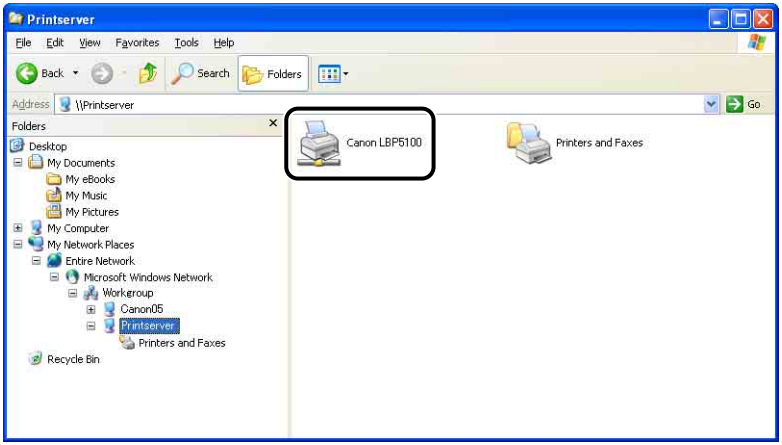


## 3 Follow the instructions on the screen.

IMPORTANT

If you are using Windows XP Service Pack 2 or another operating system equipped with Windows Firewall on the client computers, configure Windows Firewall to unblock communication with the print server. If you do not clear the block, the printer status may not be displayed properly in the Printer Status Window, and some of the printer functions may not operate properly. (See p. 9-14)

# Uninstalling the CAPT Software

The process of removing software to restore the computer to the same state as before the software was installed is referred to as uninstallation. The CAPT software can be uninstalled using the following procedure.

IMPORTANT

- If the printer driver was installed on Windows 2000/XP/Server 2003 logged on by a user who is a member of Administrators, it cannot be uninstalled from the computer logged on by anyone other than users who are members of Administrators. Be sure to log on as a member of Administrators before the uninstallation.
- If the manuals are installed, the installed manuals also can be uninstalled by uninstalling the CAPT software using the Uninstaller.
- If you are using a computer with Windows XP Service Pack 2 or another operating system equipped with Windows Firewall, the printer is registered in the [Exceptions] sheet in the [Windows Firewall] dialog box. When you uninstall the CAPT software using the uninstaller, the settings for this printer are also removed from the [Exceptions] sheet in the [Windows Firewall] dialog box.

## 1 Close all of the files and programs listed below:

- Help files
- Printer Status Window
- Control Panel
- Other applications

## 2 From the [Start] menu, select [All Programs] → [Canon Printer Uninstaller] → [Canon LBP5100 Uninstaller].

For Windows 98/Me/2000: From the [Start] menu, select [Programs] → [Canon Printer Uninstaller] → [Canon LBP5100 Uninstaller].

## 3 Select the name of this printer, then click [Delete].

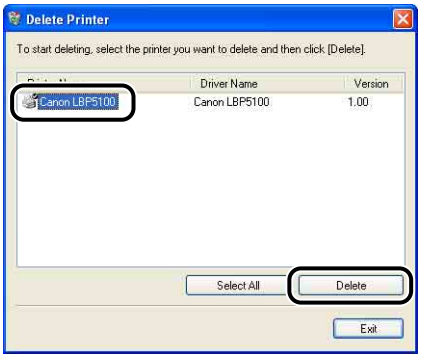


NOTE

Even if [Canon LBP5100] is not on the list in the [Delete Printer] dialog box, you can delete the file and information related to this printer by clicking [Delete].

## 4 Click [Yes].

When the printer is used as a shared printer, the following screen appears. Confirm the contents of the message, and then click [Yes] if you want to uninstall the printer driver.

Uninstallation starts. Please wait a moment.

## 5 Click [Exit].

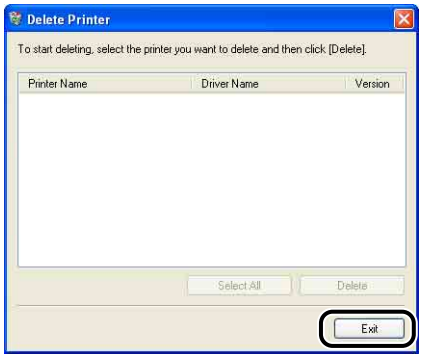


NOTE

If the CAPT software cannot be uninstalled, see "When Uninstallation Fails," on p. 7-43.

# Printing a Document

5
CHAPTER

This chapter describes the printing procedures and the functions of this printer.


Setting Printer Information before Printing . . . . . 5-3

Printing from an Application . . . . . 5-5

Specifying the Printing Preferences . . . . . 5-9

For Windows 2000/XP/Server 2003 . . . . . 5-9

For Windows 98/Me . . . . . 5-13

Deleting/Pausing/Resuming a Print Job . . . . . 5-16

Using the Various Printing Functions . . . . . 5-18

Utilizing a Variety of Options for Printing . . . . . 5-18

Various Pages in the Printer Driver . . . . . 5-25

Preview . . . . . 5-46

Printing Multiple Pages on One Sheet . . . . . 5-48

Scaling Print Output . . . . . 5-50

Poster Printing . . . . . 5-52

Watermark Printing . . . . . 5-53

Printing Borders and Printing Date . . . . . 5-55

Selecting a Print Style . . . . . 5-57

Printing with a Gutter . . . . . 5-59

Specifying the Paper Output Method . . . . . 5-60

Printing with Upper Left of Sheet as Starting Point . . . . . 5-61

Printing with the Data 180 Degrees Rotated . . . . . 5-63

Smoothing Out Rough-Textured Images . . . . . 5-64

Printing with Toner Density Adjusted . . . . . 5-66

Color Settings . . . . . 5-67

Specifying the Brightness and Contrast . . . . . 5-69

Printing a Color Sample (Windows 2000/XP/Server 2003 only) . . . . . 5-71

Specifying "Profiles" . . . . . 5-72

Editing Jobs with PageComposer . . . . . 5-76

How to Use Online Help . . . . . 5-79

Displaying Online Help on the Options Displayed on the Screen . . . . . 5-79

Displaying Online Help on the Operation Procedures . . . . . 5-80

Retrieving the Option about Which You Want to Know with Keywords and Displaying its Online Help . . 5-82

Manuals . . . . . 5-85
Installing the Manuals . . . . . 5-85
Uninstalling the Manuals . . . . . 5-88
Printer Status Window . . . . . 5-89
Functions on the Printer Status Window . . . . . 5-90
Displaying the Printer Status Window . . . . . 5-92
[Preferences] Menu . . . . . 5-94
[Consumables/Counters] Menu . . . . . 5-95
[Utility] Menu . . . . . 5-96
[Device Settings] Menu . . . . . 5-96
[Refresh] . . . . . 5-97
[Resolve Error] . . . . . 5-97
Displaying Printer Status When Using a Print Server . . . . . 5-98

# Setting Printer Information before Printing

Specify the settings for the paper feeder before printing.

## 1 Display the [Printers and Faxes] folder or the [Printers] folder.

For Windows 98/Me/2000: From the [Start] menu, select [Settings] → [Printers].
For Windows XP Professional/Server 2003: From the [Start] menu, select [Printers and Faxes].
For Windows XP Home Edition: From the [Start] menu, select [Control Panel], and then click [Printers and Other Hardware] → [Printers and Faxes].

## 2 Select the icon for this printer, then select [Properties] from the [File] menu.

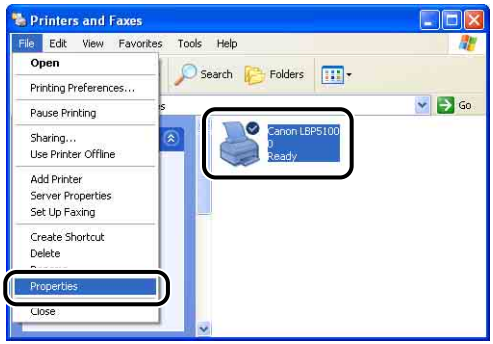

## 3 Display the [Device Settings] (for Windows 2000/XP/Server 2003) or [Configuration] (for Windows 98/Me) sheet, then specify the settings for [Paper Source Options].

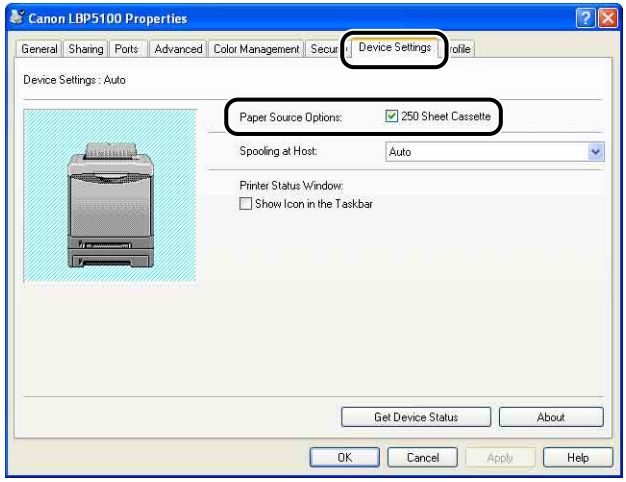


NOTE

You can also obtain the printer status such as the paper feeder automatically by clicking [Get Device Status].

## 4 Click [OK].

# Printing from an Application

After installing the CAPT software, you can now print jobs on the printer.

This section describes the procedure for printing from an application, taking Adobe Reader 7.0 as an example.

## 1 Load paper in the paper cassette or manual feed slot.

NOTE

For details on the procedure for loading paper, see "Chapter 3 Loading and Outputting Paper".

## 2 Open the PDF file to print with Adobe Reader, and then select [Print Setup] from the [File] menu.

## 3 Specify the paper size of the document and the printing orientation, then click [OK].

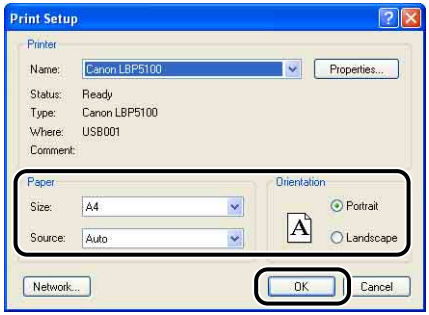


## 4 Select [Print] from the [File] menu.

The [Print] dialog box is displayed.

## 5 Select the name of this printer for [Name] or [Printer Name], and then specify the printing preferences.

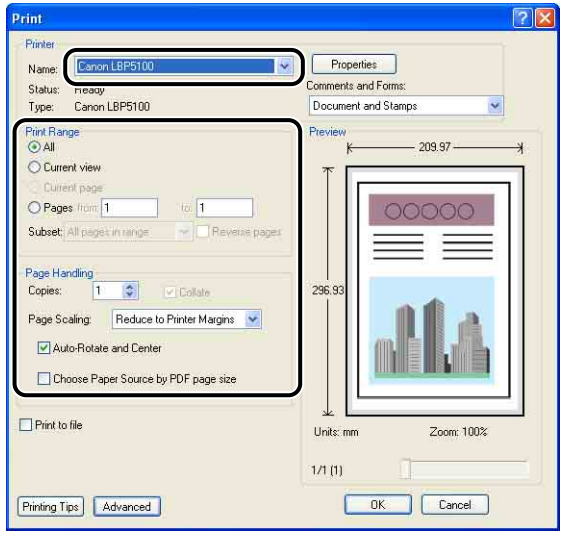


NOTE

The printer name displayed in this dialog box can be changed in the [Printers and Faxes] folder (the [Printers] folder for Windows 98/Me/2000).

## 6 If you want to specify more detailed printing preferences, click [Properties].

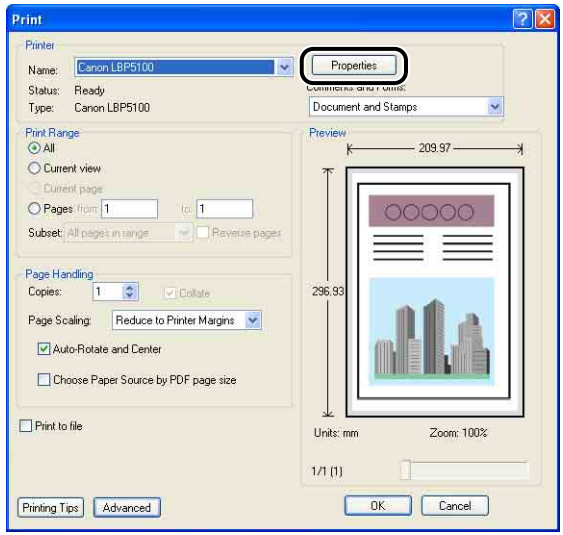

NOTE

The procedure for displaying the [Document Properties] dialog box may differ depending on the application you are using.

## 7 Specify the printing preferences in the [Page Setup], [Finishing], [Paper Source], and [Quality] sheets.

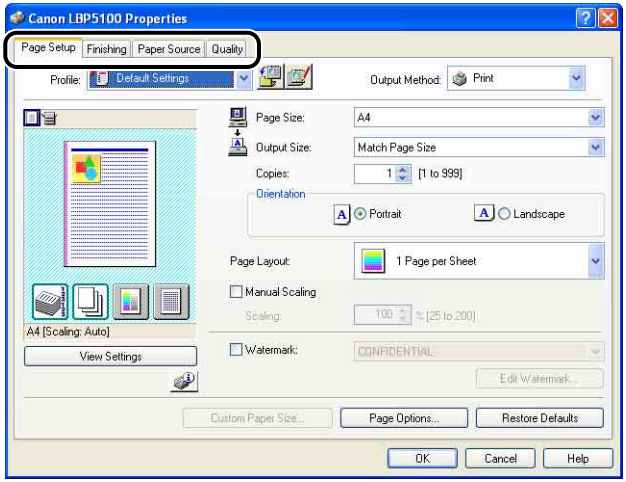


NOTE

- For more details on the settings, see "Various Pages in the Printer Driver" (p. 5-25) or Online Help. For details on methods for displaying Online Help, see "How to Use Online Help," on p. 5-79.
- The settings that are specified here only apply to the currently opened file. Check the contents of the [Document Properties] dialog box each time you print. In particular, it is recommended that you confirm the contents of the [Page Setup] sheet and the [Paper Source] sheet.
- The default settings for all files can be configured using the following dialog box.
  - For Windows 98/Me: Open the [Printer Properties] dialog box from the [Printers] folder. (See "Displaying the [Printer Properties] Dialog Box from the [Printers] Folder," on p. 5-15)
  - For Windows 2000/XP/Server 2003: Open the [Document Properties] dialog box from the [Printers and Faxes] folder or the [Printers] folder. (See "Displaying the [Document Properties] Dialog Box from the [Printers and Faxes] Folder or the [Printers] Folder," on p. 5-11)

## 8 If you want to print the document more clearly, click the [Quality] sheet, then select [Photos] from [Objective].

You can print the document more clearly although this takes longer to print than when [General] is selected.

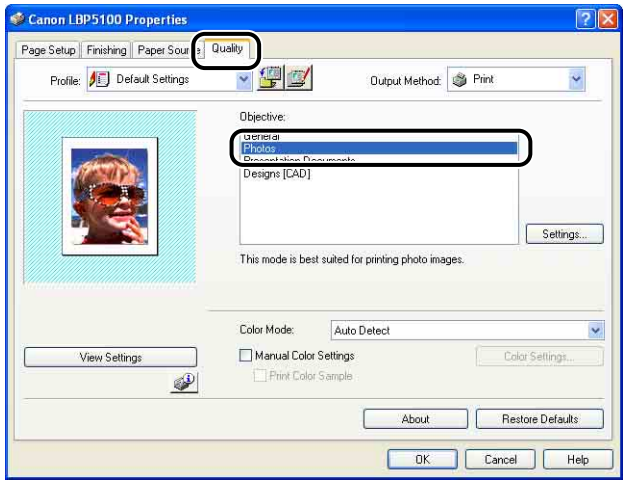


## 9 Click [OK].

The [Print] dialog box reappears.

## 10 Click [OK].

The printer starts printing.

NOTE

- If you have any problems with printing, see "Chapter 7 Troubleshooting".
- "Using the Various Printing Functions" (See p. 5-18) describes how to use the various functions of the printer and printer driver. By specifying the settings for the printer and printer driver for each job, you can make the best use of the printer and its functions.

# Specifying the Printing Preferences

The CAPT software for LBP5100 allows you to specify various printing preferences.

To specify the printing preferences, first display the [Printer Properties] dialog box or the [Document Properties] dialog box. Perform any one of the following procedures that is suitable for your operating system to display the Properties dialog boxes.

## For Windows 2000/XP/Server 2003

If you display the [Document Properties] dialog box from an application, you can specify the settings only for the job.
If you display the [Document Properties] dialog box from the [Printers and Faxes] folder or the [Printers] folder, you can specify the default settings for all jobs.
If you display the [Printer Properties] dialog box from the [Printers and Faxes] folder or the [Printers] folder, you can specify various settings for the printer and add the frequently used options as "Profiles".

NOTE

- Full Control Permission is required to specify the settings for the [Printers and Faxes] folder or the [Printers] folder. If you cannot display the [Document Properties] dialog box from the [Printers and Faxes] folder or the [Printers] folder, display the dialog box from the application.
- The [Device Settings] sheet that allows you to specify various settings for the printer can be displayed only by using the procedure described in "Displaying the [Printer Properties] Dialog Box from the [Printers and Faxes] Folder or the [Printers] Folder" (See p. 5-12).

### *Displaying the [Document Properties] Dialog Box from an Application*

This section describes the procedure, taking Adobe Reader 7.0 as an example.

**1** **Select [Print] from the [File] menu in the application.**

NOTE

Printing procedures vary depending on the application you are using. For details on the printing procedures, see the instruction manual supplied with the application.

## 2 Confirm the printer name, then click [Properties].

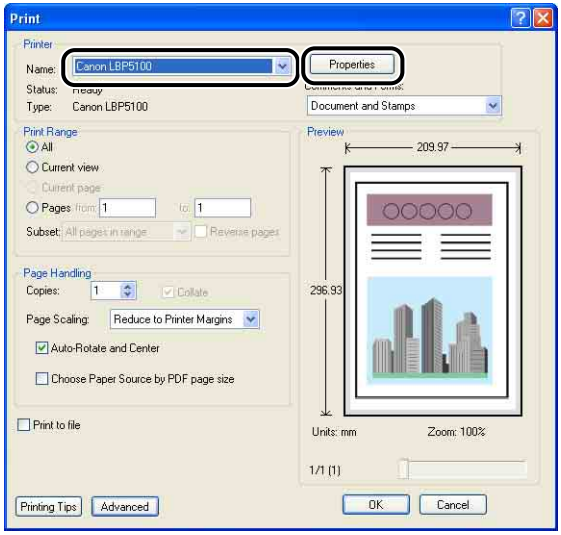


The [Document Properties] dialog box is displayed.

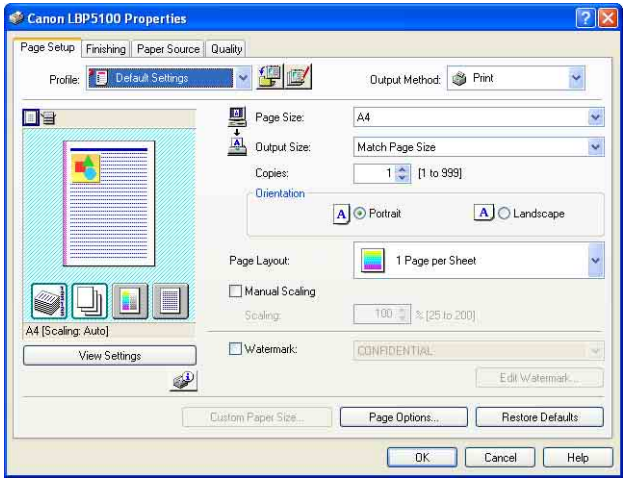

## *Displaying the [Document Properties] Dialog Box from the [Printers and Faxes] Folder or the [Printers] Folder*

### 1 Display the [Printers and Faxes] folder or the [Printers] folder.

For Windows 2000: From the [Start] menu, select [Settings] → [Printers].
For Windows XP Professional/Server 2003: From the [Start] menu, select [Printers and Faxes].
For Windows XP Home Edition: From the [Start] menu, select [Control Panel], and then click [Printers and Other Hardware] → [Printers and Faxes].

### 2 Select the icon for this printer, then select [Printing Preferences] from the [File] menu.

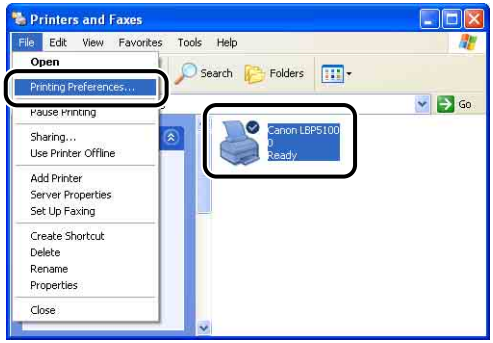


The [Document Properties] dialog box is displayed.

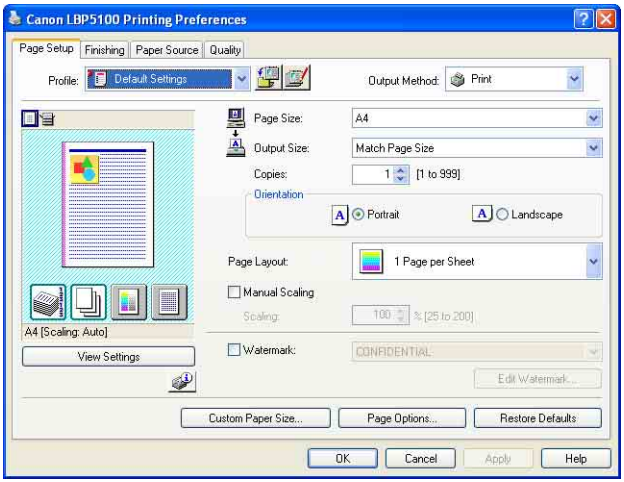

NOTE

The [Document Properties] dialog box can also be displayed by right-clicking the icon for this printer and selecting [Printing Preferences] from the pop-up menu.

## Displaying the [Printer Properties] Dialog Box from the [Printers and Faxes] Folder or the [Printers] Folder

### 1 Display the [Printers and Faxes] folder or the [Printers] folder.

For Windows 2000: From the [Start] menu, select [Settings] → [Printers].
For Windows XP Professional/Server 2003: From the [Start] menu, select [Printers and Faxes].
For Windows XP Home Edition: From the [Start] menu, select [Control Panel], and then click [Printers and Other Hardware] → [Printers and Faxes].

### 2 Select the icon for this printer, then select [Properties] from the [File] menu.

The [Printer Properties] dialog box is displayed.

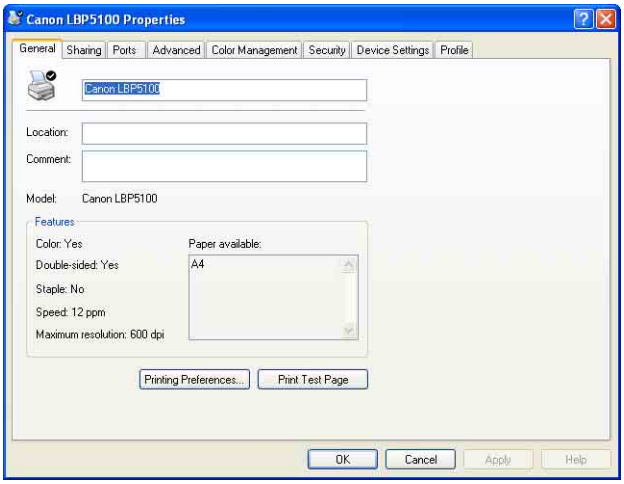


NOTE

The [Printer Properties] dialog box can also be displayed by right-clicking the icon for this printer and selecting [Properties] from the pop-up menu.

## For Windows 98/Me

If you display the [Document Properties] dialog box from an application, you can specify the settings only for the job.

If you display the [Printer Properties] dialog box from the [Printers] folder, you can specify various settings for the printer and default values for all jobs.

NOTE

The [Configuration] sheet that allows you to specify various settings for the printer can be displayed only by using the procedure described in "Displaying the [Printer Properties] Dialog Box from the [Printers] Folder" (See p. 5-15).

### *Displaying the [Document Properties] Dialog Box from an Application*

This section describes the procedure, taking Adobe Reader 6.0 as an example.

**1** **Select [Print] from the [File] menu in the application.**

NOTE

Printing procedures vary depending on the application you are using. For details on the printing procedures, see the instruction manual supplied with the application.

## 2 Select the name of this printer for [Name] or [Printer Name], and then click [Properties].

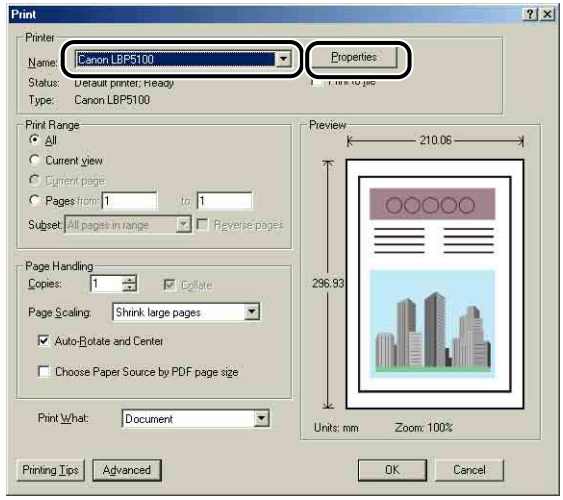


The [Document Properties] dialog box is displayed.

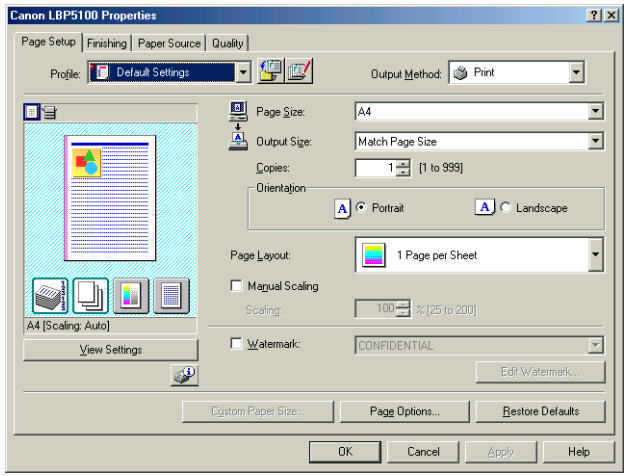

## Displaying the [Printer Properties] Dialog Box from the [Printers] Folder

**1** **From the [Start] menu, select [Settings] → [Printers].**

**2** **Select the icon for this printer, then select [Properties] from the [File] menu.**

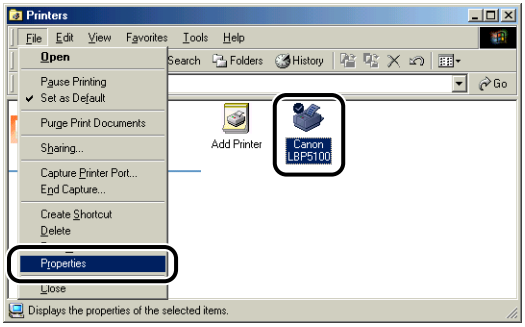


The [Printer Properties] dialog box is displayed.

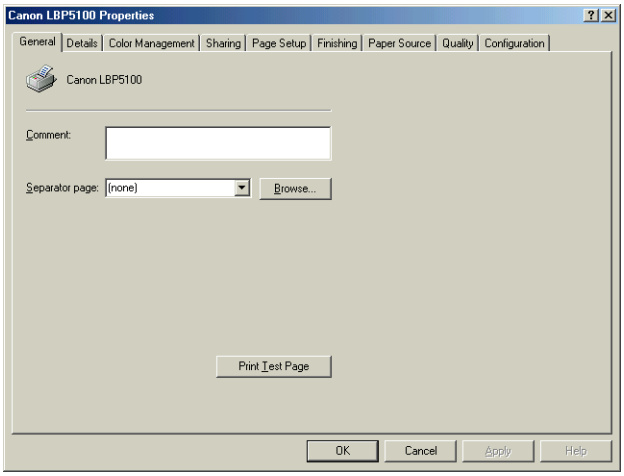


NOTE

The [Printer Properties] dialog box can also be displayed by right-clicking the icon for this printer and selecting [Properties] from the pop-up menu.

# Deleting/Pausing/Resuming a Print Job

You can delete, pause, or resume a job in the Printer Status Window.

## 1 Display the Printer Status Window.

For details on methods for displaying the Printer Status Window, see "Displaying the Printer Status Window," on p. 5-92.

## 2 When deleting or pausing the job, click the [Pause Job] button in the [Current Print Job] tab or [My Job Operation] tab.

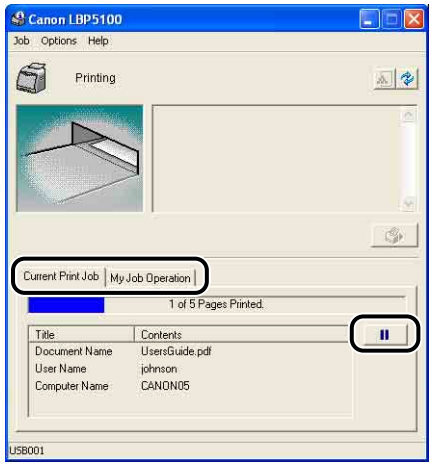


The following message is displayed and the [My Job Operation] tab is selected on the top by clicking the [Pause Job] button in the [Current Print Job] tab.

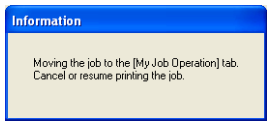

## 3 Click the button for the desired operation from among the [Job Operation] buttons.

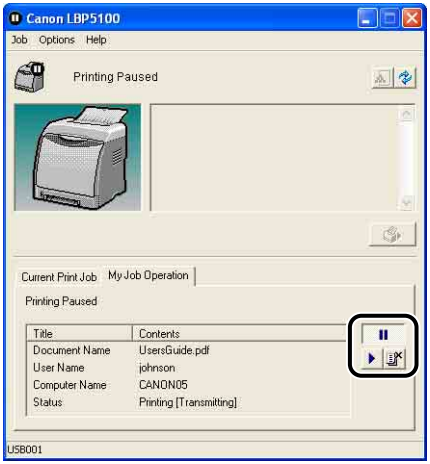


### ● Deleting a Job

❑ Click [ ] (Delete Job).

### ● Pausing a Job

❑ Click [ ] (Pause Job).

### ● Resuming the Job

❑ Click [ ] (Resume Job).

NOTE

You cannot control another user's job. For more details, see "Displaying Printer Status When Using a Print Server," on p. 5-98.

# Using the Various Printing Functions

## Utilizing a Variety of Options for Printing

You can print in a variety of ways by using the printer driver as follows.

### ■ Printing Multiple Pages on One Sheet (See p. 5-48)

Multiple pages can be printed on one sheet of paper.

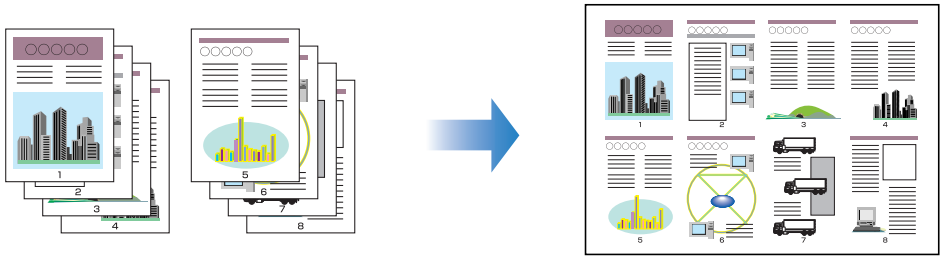

### ■ Scaling Print Output (See p. 5-50)

Specify this option when A4 size data is reduced in size and printed on B5 size paper, or B5 size data is enlarged and printed on A4 size paper. You can specify an arbitrary scaling.

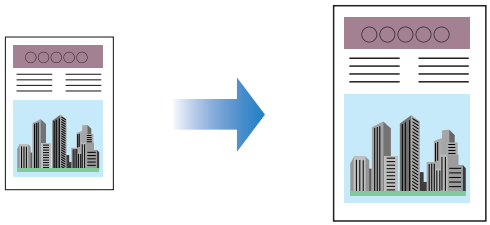

## ■ Poster Printing (See p. 5-52)

You can magnify a single page image and print it out on multiple sheets of paper. You can join these printouts together to make one large poster.

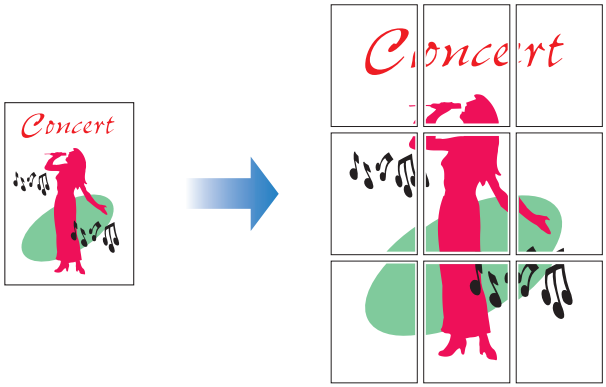


## ■ Watermark Printing (See p. 5-53)

You can superimpose watermarks (such as [COPY], [DRAFT], etc.) over the documents created by an application.

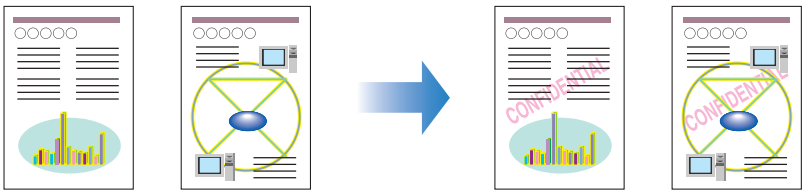


## ■ Printing Borders and Printing Date (See p. 5-55)

You can print with borders, printing date, and/or page numbers, etc.

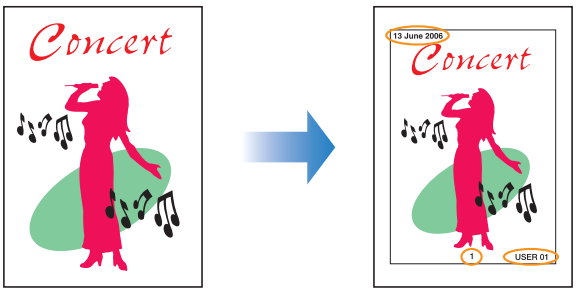

## ■ Selecting a Print Style (See p. 5-57)

You can select 2-sided printing or booklet printing as well as 1-sided printing as the print style.

- [2-sided Printing]
  Allows you to print 2-page document on the both sides of one sheet of paper.

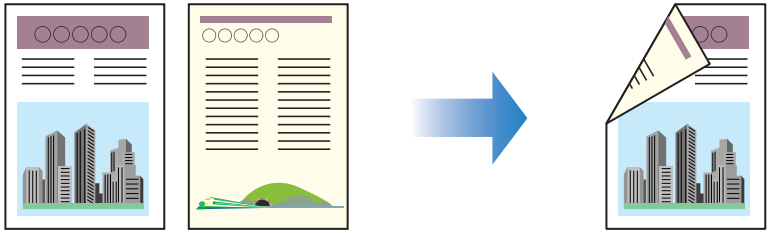

- [Booklet Printing]
  By printing 2 pages on both sides of paper and folding the paper into two, the pages are aligned properly and ready to be bound into a booklet (Therefore, 4 pages in total are printed on a single sheet of paper).
  For example, when making a booklet of 12 pages, 3 sheets are used in total since 2 pages are printed on each side of paper. To make a booklet, you only have to fold the printouts into two and bind them. The booklet printing function arranges the page order so that the pages are aligned properly when they are bound as a booklet.
  A booklet can also be made by specifying the number of sheets to be folded into two and binding the specified amount.

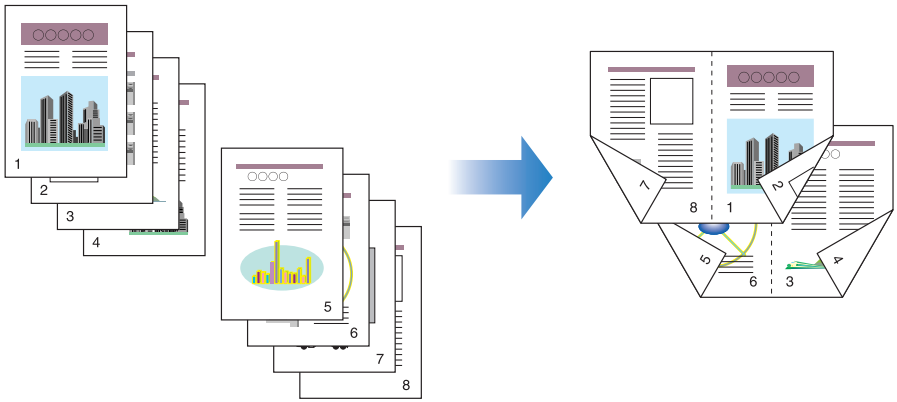


## ■ Printing with a Gutter (See p. 5-59)

You can specify a gutter on the printouts.

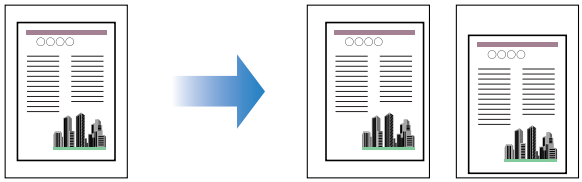

## ■ Specifying the Paper Output Method (See p. 5-60)

You can select a paper output method from the following options:

- [Off]
  Printouts of a complete job are grouped.
  For example, if you are printing three copies of a 3-page document, printouts of a complete job are grouped, arranged in this page order: 1, 1, 1, 2, 2, 2, 3, 3, 3.

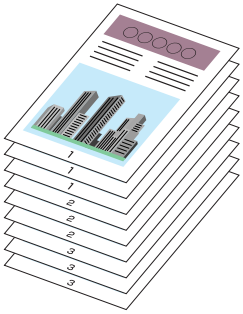


- [Collate]
  Printouts of a complete job are collated.
  For example, if you are printing three copies of a 3-page document, printouts of a complete job are collated, arranged in this page order: 1, 2, 3, 1, 2, 3, 1, 2, 3.

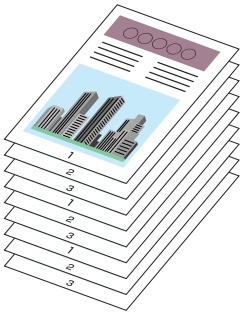


## ■ Print with Upper Left of Sheet as Starting Point (See p. 5-61)

Since printing is usually performed with the upper-left 5 mm (10 mm for envelopes) margin within the printable area of a sheet as the starting point, a certain portion (lower right) may be missing when printing data with no margin. In this case, you can print with the upper-left 0 mm margin as the starting point by selecting the check box.

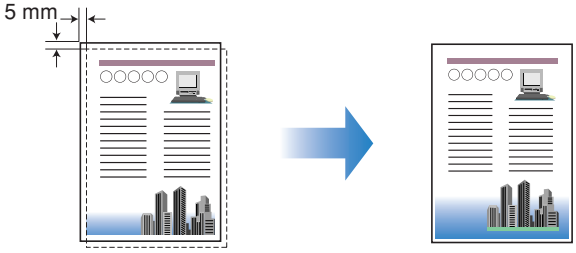

## ■ Printing with the Data 180 Degrees Rotated (See p. 5-63)

You can print with the image 180 degrees rotated. This option is useful for printing envelopes and Index Card size media that can be fed only in specific orientations.

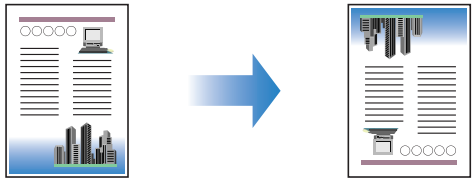

## ■ Smoothing Out Rough-Textured Images (See p. 5-64)

Specify this option when printing by smoothing out this kind of low-resolution image data.

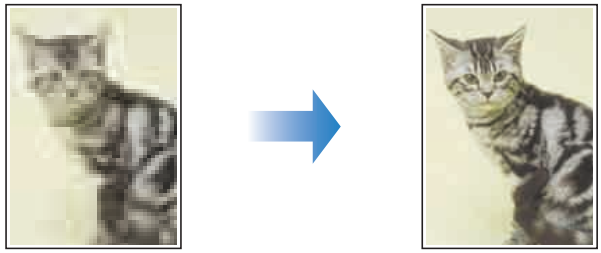

## ■ Printing with Toner Density Adjusted (See p. 5-66)

You can print with the toner density of each color (black, yellow, magenta, and cyan) adjusted.

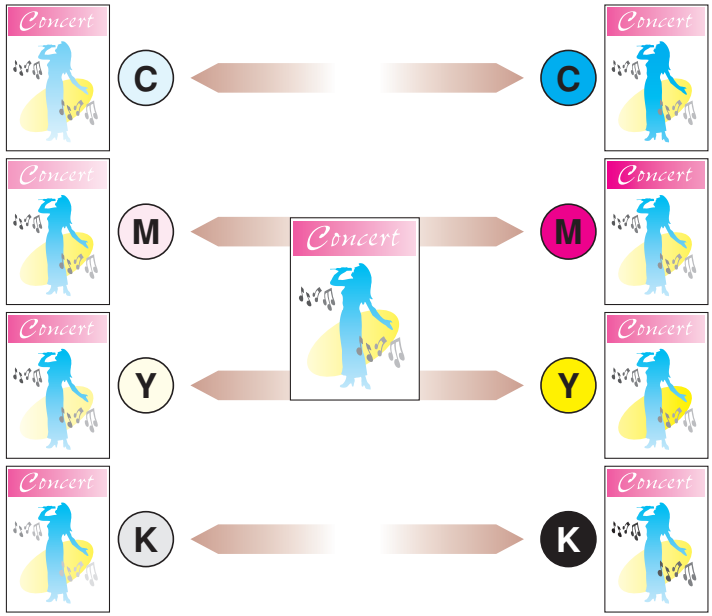

## ■ Color Settings (See p. 5-67)

You can perform color printing with the colors originally specified.

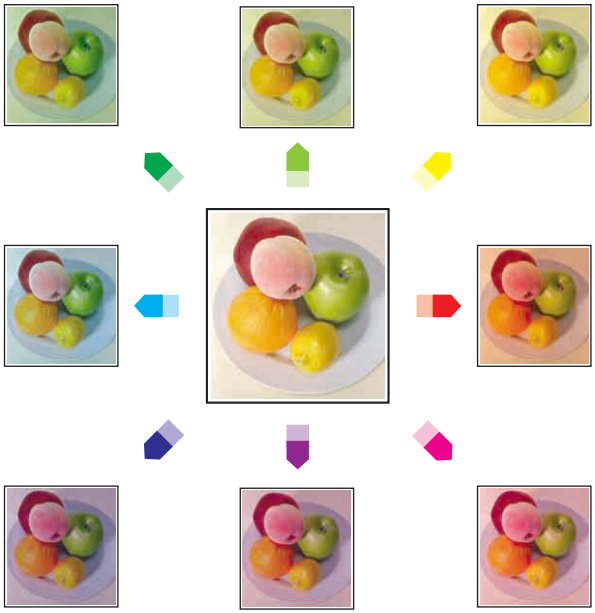

## ■ Specifying the Brightness and Contrast (See p. 5-69)

You can perform color printing with the brightness and contrast specified.

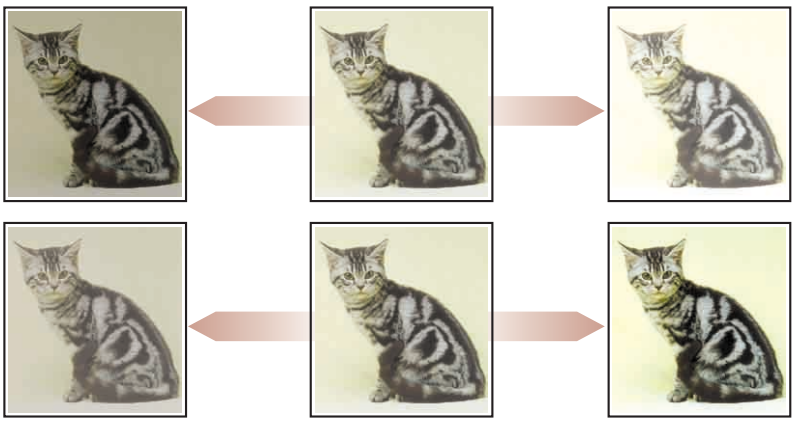

## ■ Printing a Color Sample (Windows 2000/XP/Server 2003 only) (See p. 5-71)

You can print an adjusted color sample after specifying the settings in the [Color Adjustment] sheet.

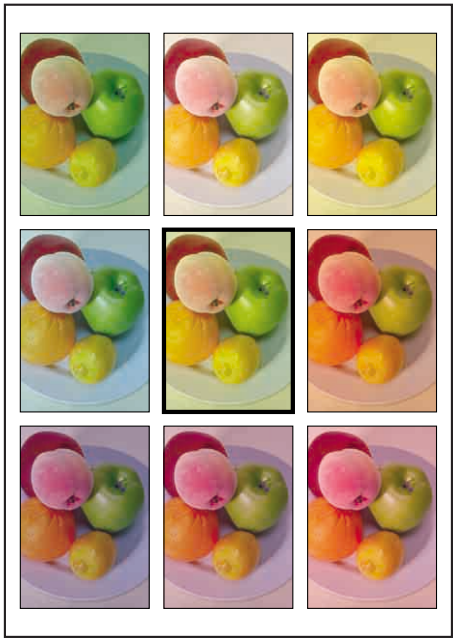

## ■ Editing Jobs with PageComposer (See p. 5-76)

You can combine two jobs into one and change the job settings for the combined job. You can edit a job in another application. You can also preview the job.

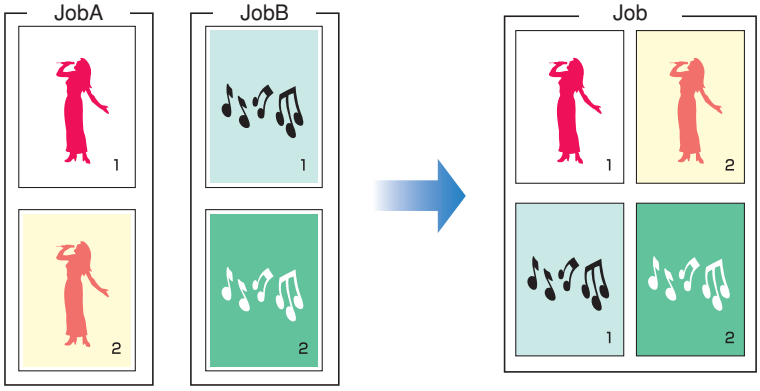

# Various Pages in the Printer Driver

The [Printer Properties] dialog box and the [Document Properties] dialog box contain the following sheets that allow you to specify the various printing functions. You can switch among the sheets by clicking the tabs across the top of the dialog box.

This section describes the types of printing preferences that can be specified in each sheet.

### ■ For Windows 2000/XP/Server 2003

- [Document Properties] Dialog Box
  - [Page Setup] Sheet
  - [Finishing] Sheet
  - [Paper Source] Sheet
  - [Quality] Sheet
- [Printer Properties] Dialog Box
  - [General] Sheet
  - [Sharing] Sheet
  - [Ports] Sheet
  - [Advanced] Sheet
  - [Color Management] Sheet
  - [Security] Sheet
  - [Device Settings] Sheet
  - [Profile] Sheet

NOTE

The [General], [Sharing], [Ports], [Advanced], [Color Management], [Security] sheets in the [Printer Properties] dialog box are displayed by Windows. For details on these sheets, see Windows Help.

### ■ For Windows 98/Me

- [Document Properties] Dialog Box
  - [Page Setup] Sheet
  - [Finishing] Sheet
  - [Paper Source] Sheet
  - [Quality] Sheet
- [Printer Properties] Dialog Box
  - [General] Sheet
  - [Details] Sheet

- [Sharing] Sheet
- [Color Management] Sheet
- [Page Setup] Sheet
- [Finishing] Sheet
- [Paper Source] Sheet
- [Quality] Sheet
- [Configuration] Sheet

NOTE

The [General], [Details], [Sharing], and [Color Management] sheets in the [Printer Properties] dialog box are displayed by Windows. For details on these sheets, see Windows Help.

## [Page Setup] Sheet

The [Page Setup] sheet allows you to specify the following printing preferences:

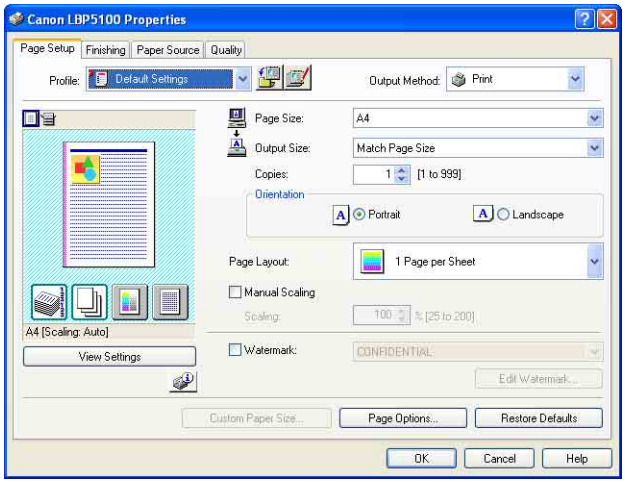


| Setting/Button | Contents |
|---|---|
| [Page Size] | You can select the paper size of the document created by an application. |
| [Output Size] | You can specify the actual paper size to be printed. |
| [Copies] | You can specify the number of copies to be printed. |
| [Orientation] | You can specify the printing orientation. |

| Setting/Button | Contents |
|---|---|
| [Page Layout] (See p. 5-48) | - [N Pages per Sheet] (N=1, 2, 4, 6, 8, 9, 16)<br>Prints multiple pages on one sheet of paper. Some applications provide a function to print a document as a collated set of copies. Do not use this function with [N Pages per Sheet].<br>- [Poster [N x N]] (N = 2, 3, 4)<br>Magnifies a single page image and print it out on multiple sheets of paper. You can join these printouts together to make one large poster. |
| [Page Order] | You can specify the page order layout for printing when [Page Layout] is set to [N Pages per Sheet] (N = 2, 4, 6, 8, 9, 16). |
| [Manual Scaling] (See p. 5-51) | Selecting this check box allows you to enter the value for scaling the printed document manually. |
| [Watermark] (See p. 5-53) | You can superimpose watermarks (such as [COPY], [DRAFT], etc.) over the documents created by an application. Select the check box for this option and select a watermark to print with the document. Select the watermark from the drop-down list on the right. |
| [Edit Watermark] (See p. 5-54) | Displays a dialog box for modifying the watermarks. |
| [Custom Paper Size] | Displays a dialog box for specifying custom paper sizes. |
| [Page Options] (See p. 5-55) | Allows you to print printing date, user name, page numbers, or a border. |

## ■ [Custom Paper Size Settings] Dialog Box

The following dialog box is displayed by clicking [Custom Paper Size].

This dialog box allows you to specify the height and width of custom paper size, which is different from the standard paper sizes.

On Windows 98/Me, up to 30 custom paper sizes can be added. On Windows 2000/XP/Server 2003, the number depends on the system environment.

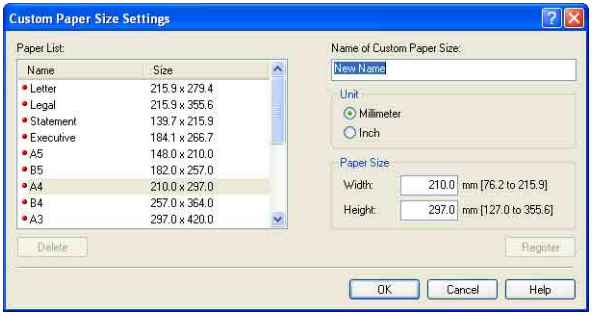

| Setting/Button | Contents |
|---|---|
| [Paper List] | Displays [Name] and [Size] of standard paper sizes and added custom paper sizes. The paper sizes with a small red mark placed at the left side of the name are standard paper sizes and [Custom [Name Fixed]]. These standard paper sizes and [Custom [Name Fixed]] cannot be deleted. |
| [Name of Custom Paper Size] | You can enter the name of the custom paper size to be added. |
| [Unit] | Specify the unit ([Millimeter] or [Inch]) to be used when setting the custom paper size. |
| [Paper Size] | Specify the height and width of the custom paper size ([Height] ≧ [Width]). Specify the custom paper size in portrait orientation ([Height] ≧ [Width]) within user-definable sizes. |
| [Delete] | Deletes the custom paper size selected in [Paper List]. However, you cannot delete the default standard paper sizes and [Custom [Name Fixed]]. |
| [Register] | Registers custom paper sizes. |

## ■ [Edit Watermark] Dialog Box (See p. 5-54)

The following dialog box is displayed by clicking [Edit Watermark].

This dialog box allows you to add new watermarks and edit the added watermarks.

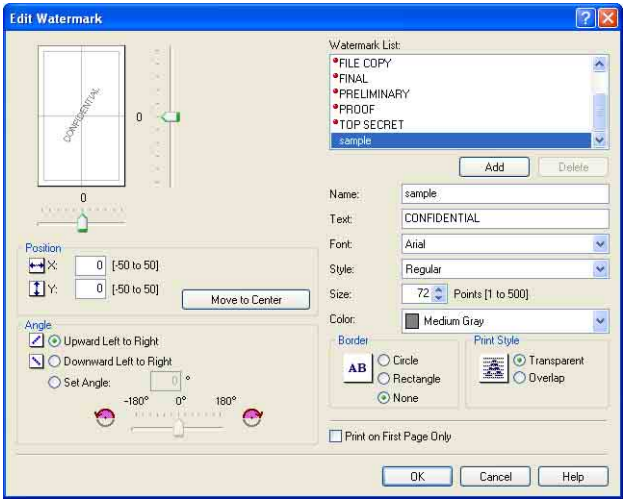

| Setting/Button | Contents |
|---|---|
| [Position] | You can specify the position to print the selected watermark on the document. Enter X and Y axis values between -50 and 50 (The center of the paper is defined as 0 (zero)). Alternatively, drag the sliders on the bottom and the right of Preview to specify the position. |
| [Move to Center] | Moves the watermark to the center of the document. |
| [Angle] | You can specify the angle to print the selected watermark on the document (The horizontal position is defined as 0 (zero)). |
| [Watermark List] | Displays a list of registered watermarks. The watermarks with a small red mark placed at the left side of the name are provided by default. These provided watermarks cannot be deleted. |
| [Add] | Allows you to add and specify a new watermark in the [Edit Watermark] dialog box (Up to 50 watermarks can be added). |
| [Delete] | Deletes the watermark selected in [Watermark List]. However, you cannot delete the default watermarks. |
| [Name] | You can enter the name for the added watermark to be displayed in [Watermark] in the [Page Setup] sheet. |
| [Text] | Enter the characters to be printed as a watermark. |
| [Font] | Select the font to be used for the watermark (TrueType fonts only). |
| [Style] | Select the font style for the watermark. |
| [Size] | Specify the font size for the watermark. |
| [Color] | Specify the color for the watermark. |
| [Border] | Specify whether a border encloses the watermark when printed. |
| [Print Style] | Select the watermark type from [Transparent] or [Overlap]. |
| [Print on First Page Only] | Select this check box when printing the watermark only on the first page of the document. |

## ■ [Page Options] Dialog Box (See p. 5-55)

The following dialog box is displayed by clicking [Page Options].
This dialog box allows you to specify borders, date, and page numbers, etc. to be printed on the printouts.

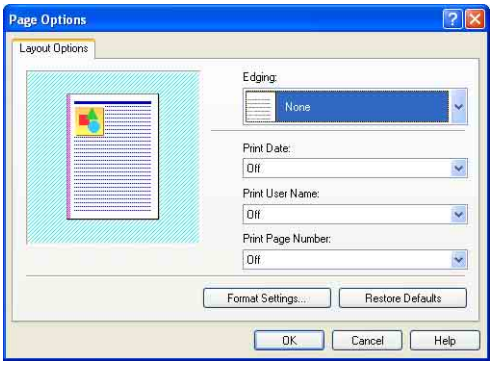


| Setting/Button | Contents |
|---|---|
| [Edging] | You can select the type of edging to print as a border. When a border is applied, the original print data will be reduced slightly in size to make room for the border. |
| [Print Date] | You can print the date. |
| [Print User Name] | You can print a user name that is registered in the computer. |
| [Print Page Number] | You can print page numbers. |
| [Format Settings] | Displays a dialog box for specifying the font for printing date and page number. |

## ■ [Format Settings] Dialog Box

The following dialog box is displayed by clicking [Format Settings] in the [Page Options] dialog box.
This dialog box allows you to specify the font for printing date and page number.

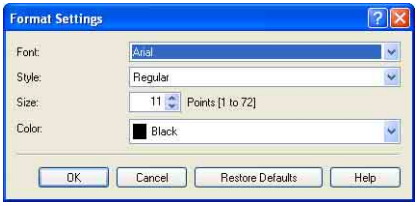

| Setting/Button | Contents |
|---|---|
| [Font] | Select the font to be used (TrueType fonts only). |
| [Style] | Select the font style to be used. |
| [Size] | Specify the font size to be used. |
| [Color] | Select the color to be used. |

## [Finishing] Sheet

The [Finishing] sheet allows you to specify the following printing preferences:

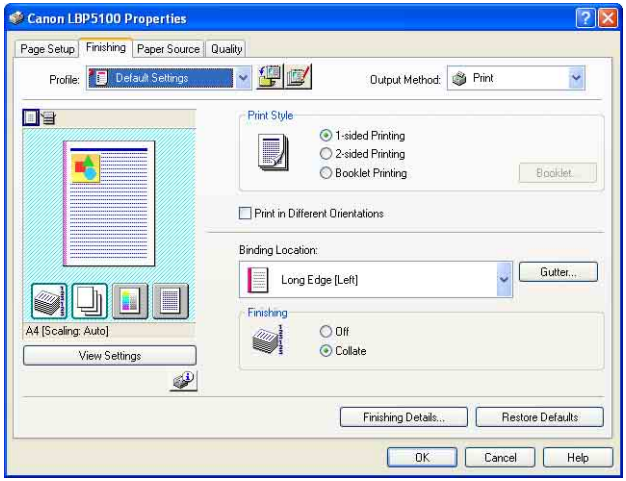


| Setting/Button | Contents |
|---|---|
| [Print Style] (See p. 5-57) | Allows you to select the print style (1-sided Printing, 2-sided Printing, or Booklet Printing). |
| [Booklet] | Displays a dialog box for [Booklet Printing]. |
| [Print in Different Orientations] | When there are data of different orientations in a job, select the [Print in Different Orientations] check box and specify the settings for [Paper Alignment] or [Gutter]. Click [Details] to specify the settings. |
| [Details] | Displays a dialog box for detailed settings for [Paper Alignment]. |
| [Paper Alignment] | Displays the settings specified in the [Detailed Settings] dialog box. |
| [Binding Location] (See p. 5-59) | You can specify which edge of the printed paper is to be bound. |

| Setting/Button | Contents |
|---|---|
| [Gutter] (See p. 5-59) | Specifies the gutter width when binding the printouts. |
| [Finishing] (See p. 5-60) | Specify the paper output method. |
| [Finishing Details] | Displays the [Finishing Details] dialog box for specifying the finishing details and print mode appropriate to the paper. |

## ■ [Detailed Settings for Booklet] Dialog Box

When [Booklet Printing] is selected, click [Booklet] to display the following dialog box as needed.

This dialog box allows you to specify the settings for booklet printing.

| Setting/Button | Contents |
|---|---|
| [Booklet Printing Method] | Specify the unit for [Booklet Printing] (printing all pages at once or by dividing into several portions). |
| [Specify Booklet Gutter] | Select this check box when specifying the gutter for performing [Booklet Printing]. Enter the value of the distance (0 to 30 mm) from the center line (fold line) in the middle of the paper. |

## ■ [Detailed Settings] Dialog Box

The following dialog box is displayed by selecting the [Print in Different Orientations] check box and clicking [Details].
This dialog box allows you to specify [Paper Alignment] on output when printing a document of different orientations in a job.

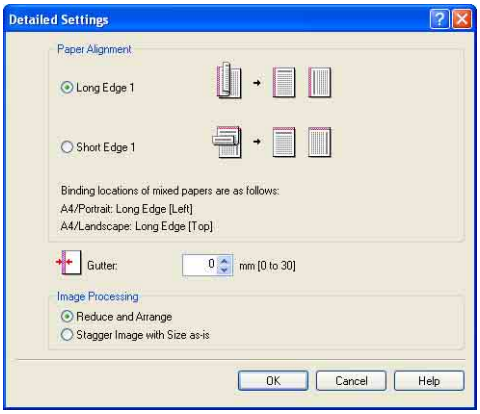


| Setting/Button | Contents |
|---|---|
| [Paper Alignment] | You can select the pattern of [Paper Alignment] when printing in different orientations. |
| [Gutter] | When a value is specified, a margin of white space is created on one side of the printed paper (This margin is called [Gutter]). The gutter is useful when binding pages. Valid values for [Gutter] range from 0 to 30 mm. |
| [Image Processing] | When [Gutter] is specified, the position of the page image is adjusted to make room for the gutter. At this point, you can select whether to reduce the size of the image to fit the remaining space. |

## ■ [Gutter Settings] Dialog Box (See p. 5-59)

The following dialog box is displayed by clicking [Gutter].

This dialog box allows you to specify the width of the gutter and image processing method.

| Setting/Button | Contents |
|---|---|
| [Gutter] | When a value is specified, a margin of white space is created on one side of the printed paper (This margin is called [Gutter]). The gutter is useful when binding pages. Valid values for [Gutter] range from 0 to 30 mm. |
| [Image Processing] | When [Gutter] is specified, the position of the page image is adjusted to make room for the gutter. At this point, you can select whether to reduce the size of the image to fit the remaining space. |

## ■ [Finishing Details] Dialog Box

The following dialog box is displayed by clicking [Finishing Details].

This dialog box allows you to specify various settings for print processing.

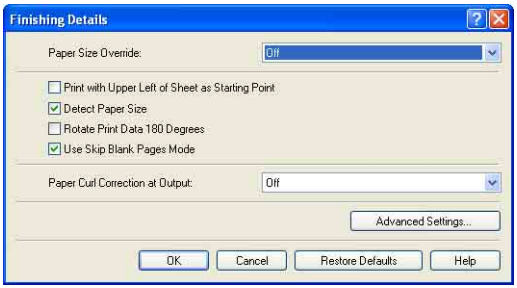


| Setting/Button | Contents |
|---|---|
| [Paper Size Override] | Specify this option when Letter size pages are printed on A4 size paper, or A4 size pages are printed on Letter size paper. |
| [Print with Upper Left of Sheet as Starting Point] (See p. 5-61)*1 | Since printing is usually performed with the upper-left 5 mm (10 mm for envelopes) margin within the printable area of a sheet as the starting point, a certain portion (lower right) may be missing when printing data with no margin. When this check box is selected, printing is performed with the upper-left 0 mm margin of sheet as the starting point. |

| Setting/Button | Contents |
|---|---|
| [Detect Paper Size]*2 | If the check box for this option is selected, the message <Specified Paper Different from Set Paper> appears in the Printer Status Window, and the job is paused when the paper size specified in [Output Size] in the [Page Setup] sheet is different from the paper size specified in the [Register Paper Size in Cassettes] dialog box in the Printer Status Window on printing from the paper cassette.<br>When printing on paper of the size specified in [Output Size], load the appropriate paper in the paper cassette and specify the appropriate paper size in the [Register Paper Size in Cassettes] dialog box.<br>When printing the currently loaded paper, click the [Resolve Error] button.<br>If the check box for this option is cleared, no message appears, and the job uses the currently loaded paper even when the settings for the paper size are different from each other. |
| [Rotate Print Data 180 Degrees]<br>(See p. 5-63) | Prints with the image 180 degrees rotated.<br>This option is useful for printing envelopes and Index Card size media that can be fed only in specific orientations. |
| [Use Skip Blank Pages Mode] | When the check box for this option is selected, blank paper is not output if the job includes blank pages. |
| [Paper Curl Correction at Output] | Depending on the paper type or the operating environment (especially in a high-humidity environment), the printed paper may curl. In this case, you may be able to improve the printout results by specifying this option. |
| [Advanced Settings] | When you want to solve the problems of the print quality, click this button and specify the settings in the [Advanced Settings] dialog box. If you are using Windows 2000/XP/Server 2003, you can also specify whether the print data is spooled in EMF (meta file) format. |

*1 The edge of paper may be missing partly, or optimum print quality may not be obtained depending on the print data to be printed.

*2 If [Paper Source] is set to [Auto], perform the following procedure regardless of the setting for this option.

- When [Paper Type] in the [Paper Source] sheet is set to [Plain Paper], [Plain Paper L], [Envelope], or [Envelope L]:
  When the setting for [Output Size] is different from the one specified in the [Register Paper Size in Cassettes] dialog box, the job is paused (If paper is loaded in the manual feed slot, however, the printer does not pause the job but prints using the paper).
  If you want to print from the paper cassette, load the appropriate paper in the paper cassette and specify the appropriate paper size in the [Register Paper Size in Cassettes] dialog box.
  If you want to print from the manual feed slot, load paper in the manual feed slot.
- When [Paper Type] in the [Paper Source] sheet is set to [Heavy Paper 1], [Heavy Paper 2], [Transparency], or [Label]:
  The job is paused (If paper is loaded in the manual feed slot, however, the printer does not pause the job but prints using the paper).
  If you want to print from the manual feed slot, load paper in the manual feed slot.
  If you want to print from the paper cassette, cancel the job once, set [Paper Source] in the [Paper Source] sheet to [Cassette 1] or [Cassette 2], and then print again.

## ■ [Advanced Settings] Dialog Box

The following dialog box is displayed by clicking [Advanced Settings] in the [Finishing Details] dialog box.

This dialog box allows you to specify the finishing details.

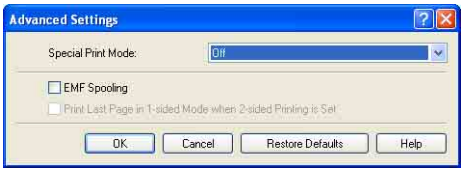


| Setting/Button | Contents |
|---|---|
| [Special Print Mode] | Print quality may deteriorate depending on the type of paper being used or the operating environment of the printer. [Special Print Mode] provides a number of settings for solving problems related to printing quality. |
| [EMF Spooling] (Windows 2000/XP/Server 2003 only) | Specify whether the print data is spooled in EMF (meta file) format. |
| [Print Last Page in 1-sided Mode when 2-sided Printing is Set] | When this check box is selected and the last page for the 2-sided printing is 1-sided printing, printing can be performed faster than normal 2-sided printing. |

## *[Paper Source] Sheet*

The [Paper Source] sheet allows you to specify the following printing preferences:

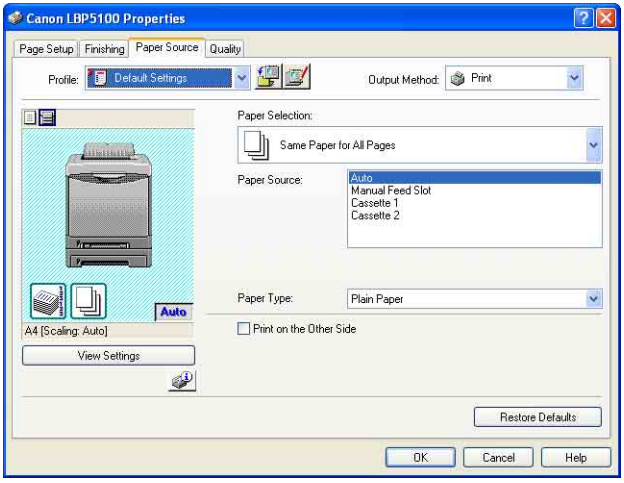

| Setting/Button | Contents |
|---|---|
| [Paper Selection] | Specify the paper feed method. |
| [Paper Source] | Specify the paper source or paper type according to the settings selected in [Paper Selection].<br>- [Auto]<br>Automatically selects the paper source according to the size or type of paper.<br>- [Manual Feed Slot]/[Cassette 1]/[Cassette 2] (Displayed only when the optional paper feeder is installed)<br>Feeds paper from the selected paper source. The following types of paper can be loaded in each paper source.<br>- Plain paper (60 - 90 g/m$^2$)<br>- Heavy paper (91 - 163 g/m$^2$)<br>- Envelope<br>- Label<br>- Transparency<br>When printing heavy paper, transparencies, or labels from the paper cassette, select [Cassette 1] or [Cassette 2]. When [Auto] is selected, paper cannot be fed from the paper cassette. |
| [Paper Type] | You can specify the type of paper. (See p. 3-3) |
| [Print on the Other Side] | It is not recommended to print the other side of paper previously printed by this printer. However, if you have to print on both sides of paper, select the [Print on the Other Side] check box when printing the other side of the previously printed paper. |

## [Quality] Sheet

The [Quality] sheet allows you to specify the following printing preferences:

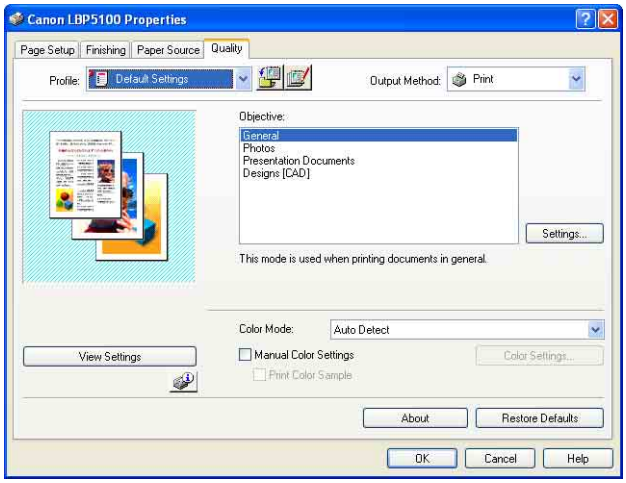

| Setting/Button | Contents |
|---|---|
| [Objective] | Selecting the appropriate mode from [Objective] for the contents of the document allows you to perform optimum printing. Selecting each option in [Objective] displays a comment on the option under the list. To change the printing preferences selected in [Objective] to meet your needs, click [Settings]. |
| [Settings] | Allows you to change the printing preferences in the [Custom Settings] dialog box. |
| [Color Mode] | Specifies whether to perform color printing or black and white printing. |
| [Manual Color Settings] (See p. 5-67) | Select this check box when customizing colors. To specify the colors in detail, click [Color Settings] to display the [Color Settings] dialog box. |
| [Color Settings] (See p. 5-67) | After selecting the [Manual Color Settings] check box, click this button to customize colors. |
| [Print Color Sample] (Windows 2000/XP/ Server 2003 only) (See p. 5-71) | If this check box is selected, you can print an adjusted color sample after specifying the settings in the [Color Adjustment] sheet that is displayed when [Color Settings] is clicked. [Preview] is printed in the center of the paper, and this is surrounded by images where the color tone is changed by 1 unit in each of the corresponding directions. |

## ■ [Custom Settings] Dialog Box

The following dialog box is displayed by clicking [Settings].

This dialog box allows you to change the printing preferences.

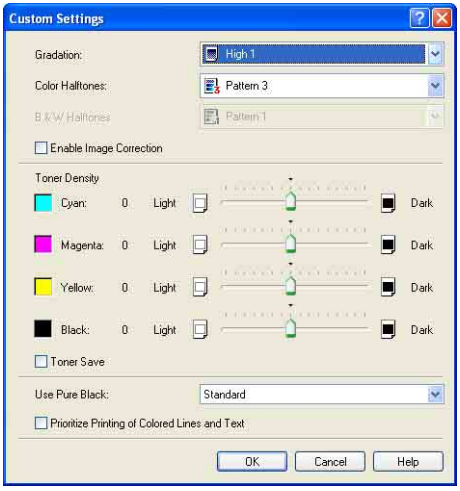

| Setting/Button | Contents |
|---|---|
| [Gradation] | Allows you to specify the gradation when printing images in halftones. |
| [Color Halftones] | Allows you to select a dither pattern to use when printing data in color halftones. |
| [B & W Halftones] | Allows you to select a dither pattern to use when printing data in monochrome halftones. |
| [Enable Image Correction] (See p. 5-64) | When image data such as photographic images are enlarged in size in an application and printed, the printed images can look rough or jagged. Specify this option when printing by smoothing out this kind of low-resolution image data. |
| [Toner Density] (See p. 5-66) | Adjusts the toner density for the print data. |
| [Toner Save]* | The toner save mode is used to print a test page. By using the toner save mode, you can print by thinning out the print data. |
| [Use Pure Black] | Specifies whether to perform gray compensation. Gray compensation makes black and gray data print reliably in black and gray. Select the subject of gray compensation from the list. |
| [Prioritize Printing of Colored Lines and Text] | Select the check box for this option when color lines or text appear patchy or broken. You should be able to print thin lines finely. |

* Using the toner save mode may decrease print density, making printed text look patchy.
- When printing without using the toner save mode
- When printing using the toner save mode

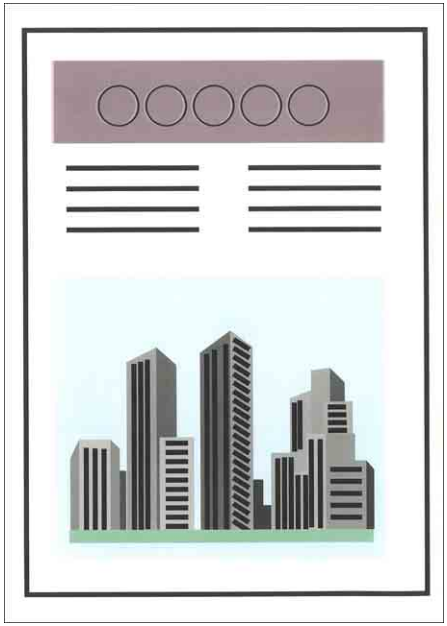

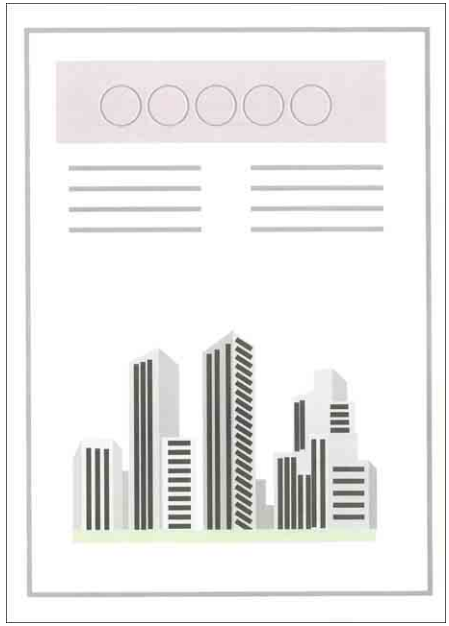

## ■ [Color Settings] Dialog Box

The following dialog box is displayed by clicking [Color Settings].

This dialog box has the [Color Adjustment] sheet and the [Matching] sheet.

- [Color Adjustment] Sheet
  This sheet allows you to adjust color, brightness, and contrast for printing.

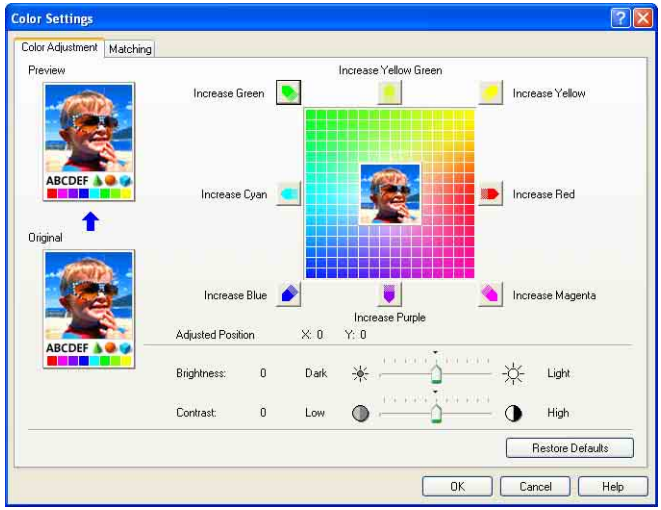

| Setting/Button | Contents |
|---|---|
| [Preview] | Displays a sample image after adjustment. |
| [Original] | Displays a sample of the original image before adjustment. |
| [Adjustment Grid] (See p. 5-67) | Adjust the colors by moving the [Preview Image] at the center of [Adjustment Grid] from side to side or up and down. |
| [Adjusted Position] | [Adjusted Position] shows the X (horizontal) and Y (vertical) position of [Preview Image] after adjustment. |
| [Brightness] (See p. 5-69) | You can adjust the brightness for the print data. |
| [Contrast] (See p. 5-69) | You can adjust the contrast for the print data. |

- [Matching] Sheet

  This sheet allows you to specify the method for color correction for printing.
  If you do not perform color correction, specify the setting for [Gamma].
  Also, if you are using Windows 2000/XP/Server 2003, you can print using CanoFine.

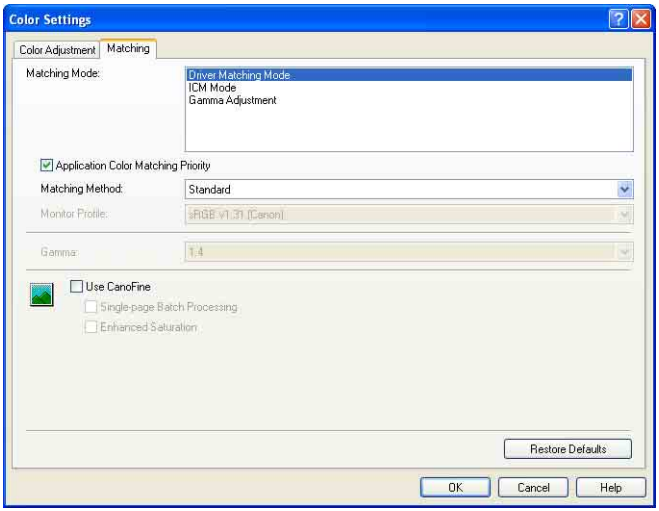


| Setting/Button | Contents |
|---|---|
| [Matching Mode] | You can specify the method for color correction. |
| [Application Color Matching Priority] (Windows 2000/XP/Server 2003 only) | If the check box for this option is cleared, you can print with the color matching process specified in the printer driver prioritized. If you want to print with the color matching in the application prioritized, select the check box for this option. |
| [Matching Method] | You can specify which element is to be prioritized in matching. |

| Setting/Button | Contents |
|---|---|
| [Monitor Profile] | You can select the appropriate option (the profiles registered in your computer are displayed) for the monitor or scanner in use. |
| [Gamma] | When [Matching Mode] is set to [Gamma Adjustment], color is adjusted by brightness without performing matching. In [Gamma], you can adjust the brightness of the printout results without spoiling the lightest parts and darkest parts. Apply this option when printed colors in the printed paper are lighter than those in the original image (such as photographs that have not yet been scanned, diagrams, charts, or graphics created on the monitor) or when you want to change the brightness of colors. |
| [Use CanoFine] (Windows 2000/XP/ Server 2003 only) | Select this option when using CanoFine. CanoFine is the function that is used to print bitmap data finely, correcting it automatically. The images shot by a digital camera are printed finely by using this option. |
| [Single-page Batch Processing] (Windows 2000/XP/ Server 2003 only) | Performs CanoFine processing by treating all of the bitmap data in one page as a single piece of data. When the check box for this option is selected, revolved or cut-out bitmap data may be printed clearly. |
| [Enhanced Saturation] (Windows 2000/XP/ Server 2003 only) | Performs CanoFine processing by enhancing the vividness of the colors. |

## [Configuration]/[Device Settings] Sheet

The [Configuration]/[Device Settings] sheet allows you to specify the paper source options, when to display the Printer Status Window, and others.

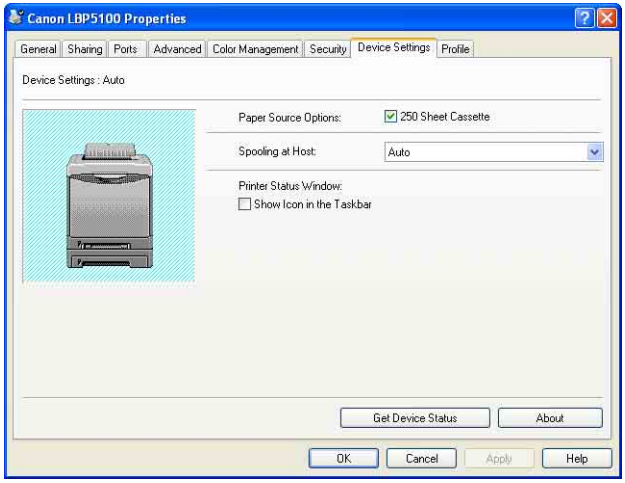

| Setting/Button | Contents |
|---|---|
| [Paper Source Options] | Select the check box for this option when the paper source option is installed in the printer. |
| [Spooling at Host] (Windows 2000/XP/Server 2003 only) | You can specify whether [Spooling at Host] is performed in the computer (whether the jobs are processed in the computer). When [Spooling at Host] is not performed in the computer, some options become disabled. You can select either [Auto] or [Disabled]. When [Auto] is selected, the spooling status is automatically determined by the printer settings. |
| [Show Icon in the Taskbar] | When this check box is selected, an icon for displaying the Printer Status Window appears in the taskbar on the lower right of the screen. To display the Printer Status Window, click the icon in the taskbar, then click the printer name. |
| [Get Device Status] | Automatically obtains the printer status of the paper source options from the printer and reflects it in the printer driver settings. |

## [Profile] Sheet (Windows 2000/XP/Server 2003 only)

This sheet allows you to add new "Profiles" and edit the previously registered "Profiles". For details on specifying "Profiles", see "Specifying "Profiles"," on p. 5-72.

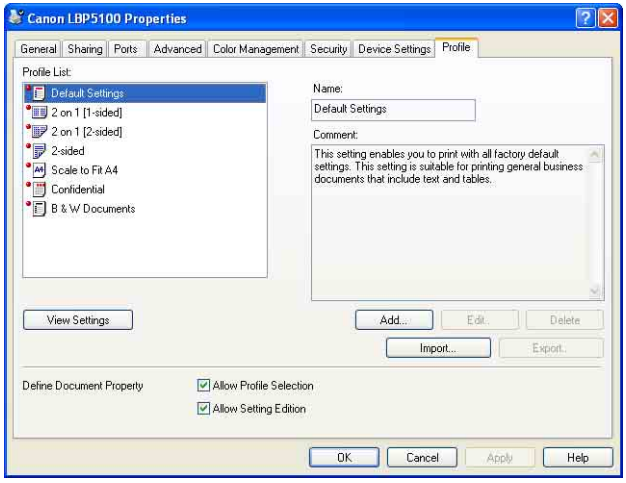


| Setting/Button | Contents |
|---|---|
| [Profile List] | Lists the available "Profiles". |
| [Name] | Displays the name of the "Profile" selected in [Profile List]. |

| Setting/Button | Contents |
|---|---|
| [Comment] | Displays a comment about the "Profile" selected in [Profile List]. |
| [View Settings] | Displays the [View Settings] dialog box. You can view and confirm all of the current page settings. |
| [Add] | Displays the [Add/Edit Profile] dialog box and allows you to add a new "Profile". |
| [Edit] | Selecting the desired "Profiles" in [Profile List] and clicking this button display the [Add/Edit Profile] dialog box and allow you to change [Name], [Icon], [Comment], and the settings for the added "Profile". However, you cannot edit the default "Profiles". |
| [Delete] | Deletes the selected "Profile" from [Profile List]. However, you cannot delete the default "Profiles". |
| [Import] | Imports a "Profile" saved as a file and adds it to [Profile List]. |
| [Export] | Exports the selected "Profile" in [Profile List] as a file. However, you cannot export a default "Profile". |
| [Define Document Property] | By using the two check boxes, specify the operations of "Profiles" that will be permitted in the [Document Properties] dialog box. |
| [Allow Profile Selection] | When the check box for this option is selected, you can select a "Profile" in the [Document Properties] dialog box. Clear the check box for this option to disable selection of a "Profile" in the [Document Properties] dialog box. |
| [Allow Setting Edition] | When this check box is selected, you can add a new "Profile" setting that is different from the default "Profiles" in the [Document Properties] dialog box. |

## ■ [Add/Edit Profile] Dialog Box

The following dialog box is displayed by clicking [Add] or [Edit].

This dialog box allows you to enter [Name], [Icon], [Comment], and the printing preferences for the newly added "Profile" or the one that you want to edit.

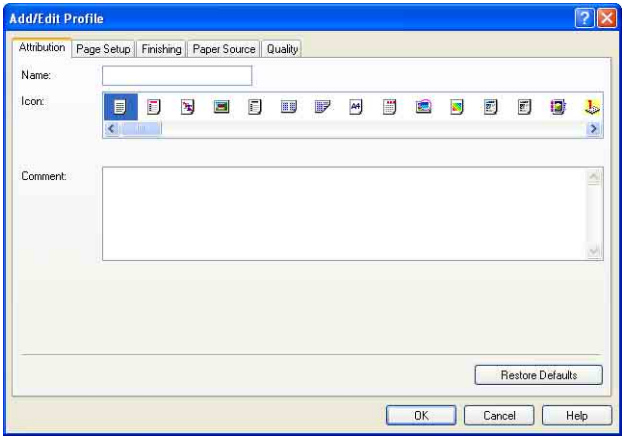


| Setting/Button | Contents |
|---|---|
| [Name] | You can enter the name for the "Profile". |
| [Icon] | You can select the icon for the "Profile". |
| [Comment] | You can enter the comment for the "Profile". |

# Preview

The current settings is displayed on Preview in the [Page Setup] sheet, the [Paper Source] sheet, and the [Finishing] sheet. You can specify the settings for [Binding Location], [Page Layout], [Finishing] and others by clicking Preview.

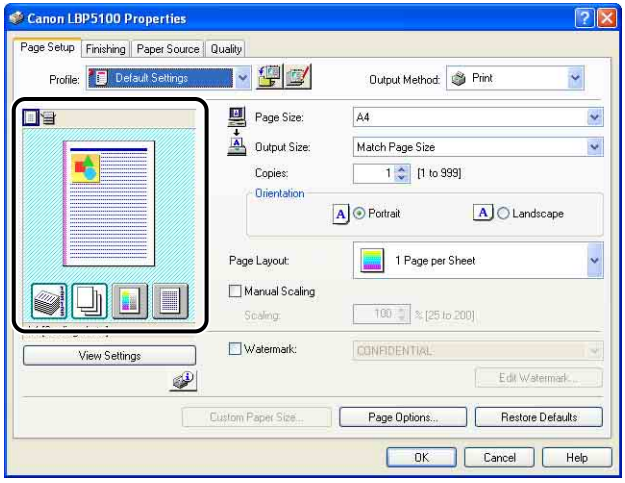


Depending on which icon on the upper left on Preview ( or ) is selected, the operating procedure of Preview differs as follows:

## ■ When is selected

You can specify [Binding Location], [Page Layout], [Print Style] ([1-sided Printing] or [2-sided Printing] only), and [Color Mode].

Left-clicking the edge of the document image allows you to specify [Binding Location].

The setting for [Page Layout] changes successively among [1 Page per Sheet], [2 Pages per Sheet], and [4 Pages per Sheet] by repeatedly left-clicking within the document image.

Right-clicking on Preview selects [1 Page per Sheet [1-sided]], [2 Pages per Sheet [1-sided]], [4 Pages per Sheet [1-sided]], [1 Page per Sheet [2-sided]], [2 Pages per Sheet [2-sided]], [4 Pages per Sheet [2-sided]], [Black and White], [Color], or [Auto Detect].

The meanings of the icons on the lower right on Preview are as follows:

| Icon | Meaning |
|---|---|
| | You can switch among [Auto Detect], [Black and White], and [Color]. |
| | You can switch the mode between [1-sided Printing] and [2-sided Printing]. |

### ■ When is selected

You can specify the paper source and [Finishing].

Left-clicking the paper source image (manual feed slot or paper cassette image) on Preview specifies the paper source. If you want to switch the paper source automatically according to the size or type of paper, left-click [Auto] on the lower right on Preview.

Also, right-clicking on Preview specifies [Finishing].

If [Paper Selection] is set to [Different for First, Others, and Last], [Different for First, Second, Others, and Last], or [Different for Cover and Others], you can specify the paper source for each page.

# Printing Multiple Pages on One Sheet

Multiple pages can be printed on one sheet of paper.

**1** **If you are using Windows 2000/XP/Server 2003, display the [Device Settings] sheet, and then make sure that [Spooling at Host] is set to [Auto].**

**2** **Display the [Page Setup] sheet, then select the number of the pages to be printed on one sheet from [Page Layout].**

The number of pages that can be selected is 1, 2, 4, 6, 8, 9, or 16 (Pages per Sheet).

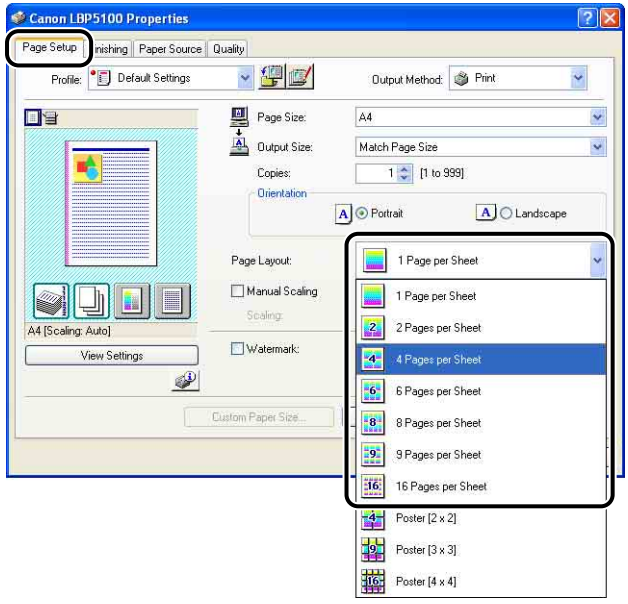

## 3 When [Page Layout] is set to 2, 4, 6, 8, 9, or 16 (Pages per Sheet), [Page Order] appears. Specify how the pages are aligned.

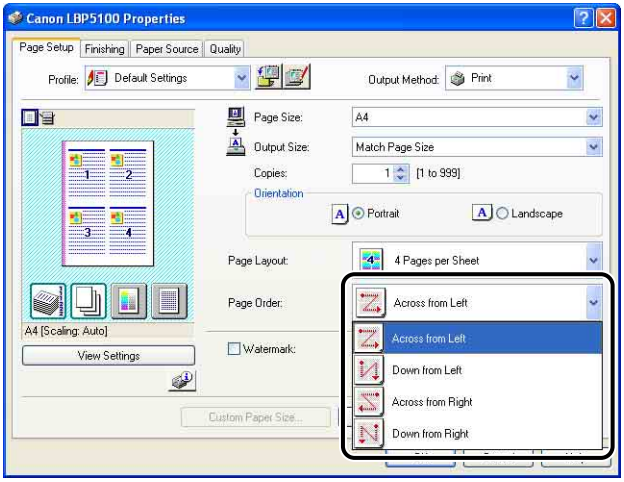


NOTE

The options under the [Page Order] pull-down menu differ depending on the paper orientation or the number of pages to be printed on one sheet.

## 4 Confirm the settings, then click [OK].

## 5 Click [OK] or [Print].

The printer starts printing.

# Scaling Print Output

You can select a scale when [Page Layout] is set to [1 Page per Sheet].

When the settings for [Page Size] and [Output Size] are different from each other, the scale factor is adjusted automatically.

The scale factor can also be specified manually.

You can specify from 25 to 200 %.

## Scaling a Document Automatically

**1** **Display the [Page Setup] sheet, then specify the page size in [Page Size].**

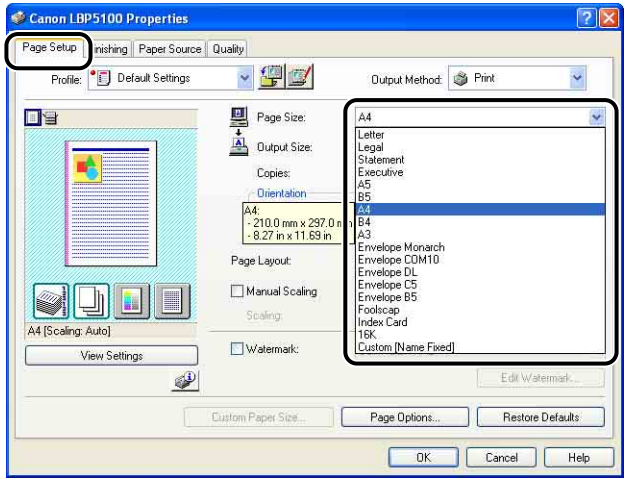


**2** **Specify the paper size in [Output Size].**

**3** **Confirm the settings, then click [OK].**

The scaling will be set automatically according to the sizes specified in [Page Size] and [Output Size].

## Scaling a Document Manually

**1** **Display the [Page Setup] sheet, then specify the page size in [Page Size].**

**2** **Specify the paper size in [Output Size].**

**3** **Select the [Manual Scaling] check box, then specify the value in the spin box.**

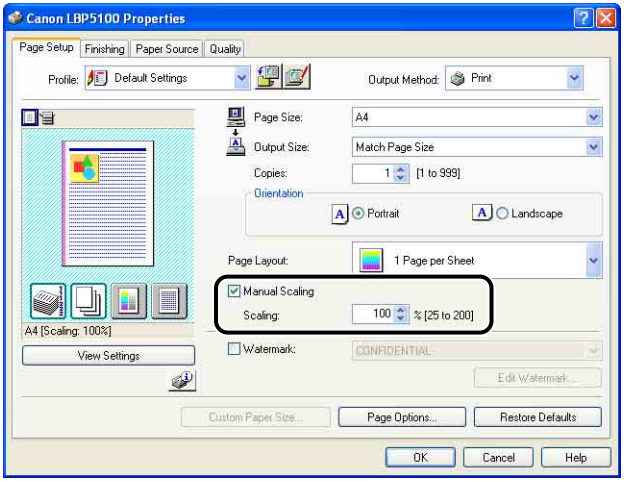


**4** **Confirm the settings, then click [OK].**

# Poster Printing

You can magnify a single page image and print it out on multiple sheets of paper. You can join these printouts together to make one large poster.

**1** **If you are using Windows 2000/XP/Server 2003, display the [Device Settings] sheet, and then make sure that [Spooling at Host] is set to [Auto].**

**2** **Display the [Page Setup] sheet, then select [Poster [N x N]] (N = 2, 3, 4) from [Page Layout].**

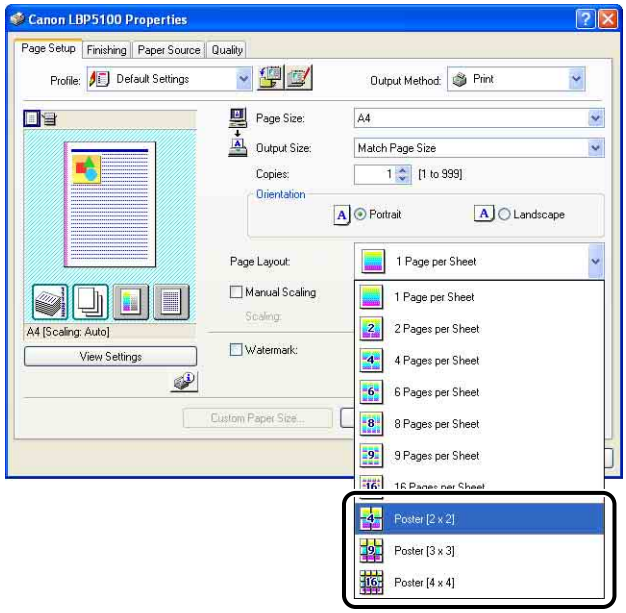


A layout image of the printed paper appears on Preview.

**3** **Confirm the settings, then click [OK].**

**4** **Click [OK] or [Print].**

The printer starts printing.

# Watermark Printing

You can superimpose watermarks (such as [COPY], [DRAFT], etc.) over the documents created by an application. Select the desired character string from the list of the character strings registered as watermarks. Also, you can add new watermarks or edit the already registered watermarks by clicking [Edit Watermark] in the [Page Setup] sheet.

## Watermark Printing

**1** **If you are using Windows 2000/XP/Server 2003, display the [Device Settings] sheet, and then make sure that [Spooling at Host] is set to [Auto].**

**2** **Display the [Page Setup] sheet, select the [Watermark] check box, and then select the watermark to print with the document from the drop-down list on the right of [Watermark].**

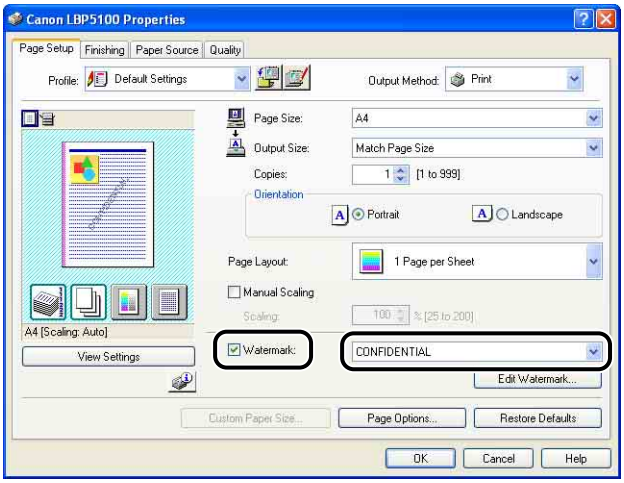


**3** **Confirm the settings, then click [OK].**

**4** **Click [OK] or [Print].**

The printer starts printing.

## Editing Watermarks

**1** **If you are using Windows 2000/XP/Server 2003, display the [Device Settings] sheet, and then make sure that [Spooling at Host] is set to [Auto].**

**2** **Display the [Page Setup] sheet, select the [Watermark] check box, and then click [Edit Watermark].**

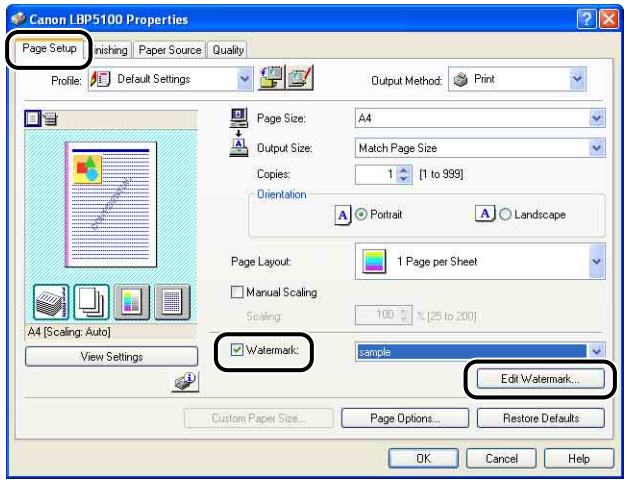


**3** **Specify the options as needed.**

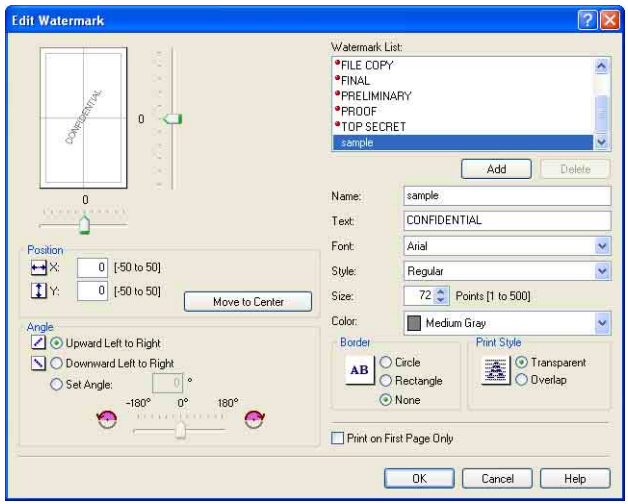

NOTE

- For more details on the settings, see "Various Pages in the Printer Driver" (p. 5-25) or Online Help. For details on methods for displaying Online Help, see "How to Use Online Help," on p. 5-79.
- When adding a new watermark, click [Add].
- You cannot change the settings for the default watermarks.

**4** **Confirm the settings, then click [OK].**

The [Page Setup] sheet reappears.

## Printing Borders and Printing Date

You can print with borders, printing date, and/or page numbers.

**1** **If you are using Windows 2000/XP/Server 2003, display the [Device Settings] sheet, and then make sure that [Spooling at Host] is set to [Auto].**

**2** **Display the [Page Setup] sheet, then click [Page Options].**

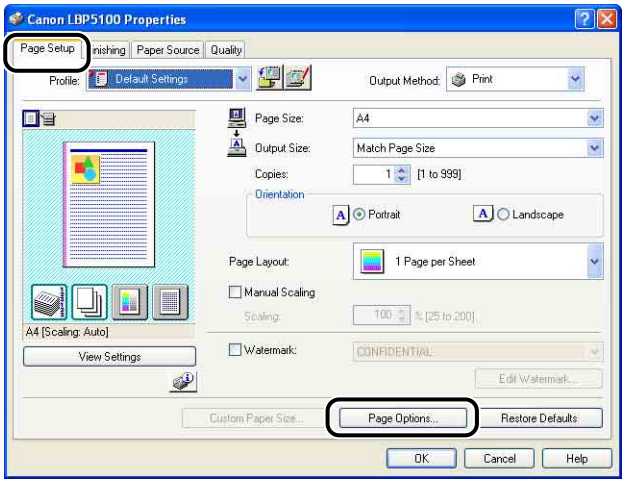

## 3 Specify the options as needed.

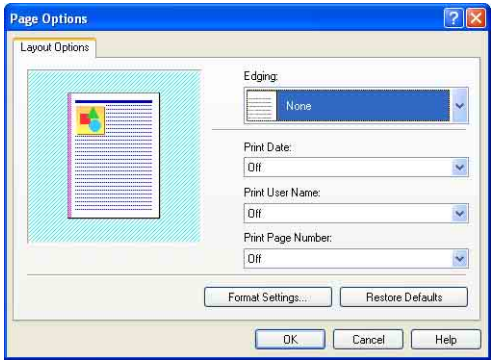


NOTE

For more details on the settings, see "Various Pages in the Printer Driver" (p. 5-25) or Online Help. For details on methods for displaying Online Help, see "How to Use Online Help," on p. 5-79.

## 4 Confirm the settings, then click [OK].

The [Page Setup] sheet reappears.

## 5 Click [OK].

## 6 Click [OK] or [Print].

The printer starts printing.

# Selecting a Print Style

Allows you to select the print style (1-sided Printing, 2-sided Printing, or Booklet Printing).

IMPORTANT

For Windows 2000/XP/Server 2003, [Booklet Printing] is disabled when [Spooling at Host] is set to [Disabled] in the [Device Settings] sheet.

## 1 Display the [Finishing] sheet and select any one of [1-sided Printing], [2-sided Printing], or [Booklet Printing] for [Print Style].

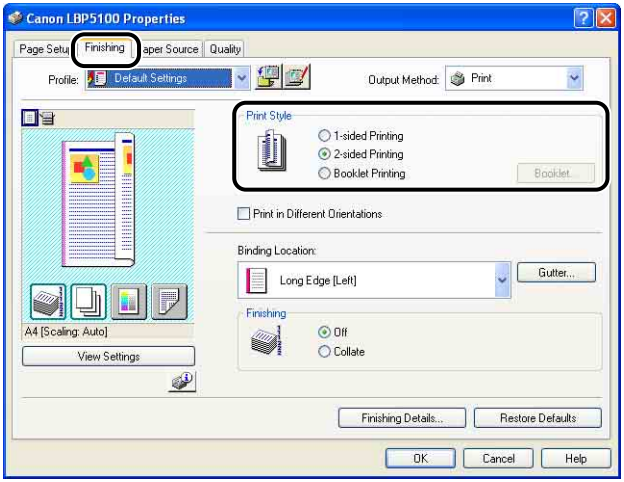


[1-sided Printing]: Prints on one side of paper.

[2-sided Printing]: Prints on both sides of paper.

[Booklet Printing]: Prints booklets. Booklet printing involves printing 2 pages on both sides of a sheet of paper in the appropriate order so that the printouts become a booklet when folded into two. To perform detailed settings for booklet printing, click [Booklet].

## 2 When [Booklet Printing] is selected, click [Booklet] and specify the following options as needed.

NOTE

For more details on the settings, see "Various Pages in the Printer Driver" (p. 5-25) or Online Help. For details on methods for displaying Online Help, see "How to Use Online Help," on p. 5-79.

## 3 Confirm the settings, then click [OK].

The [Finishing] sheet reappears.

## 4 Confirm the settings, then click [OK].

## 5 Click [OK] or [Print].

The printer starts printing.

# Printing with a Gutter

You can specify a gutter on the printouts. Valid gutter values range from 0 to 30 mm.

When a gutter is specified, the position of the page image is adjusted to make room for the gutter. At this point, you can select whether to reduce the size of the image to fit the remaining space.

**1** **Display the [Finishing] sheet, specify the edge on which the gutter is to be located in [Binding Location], and then click [Gutter].**

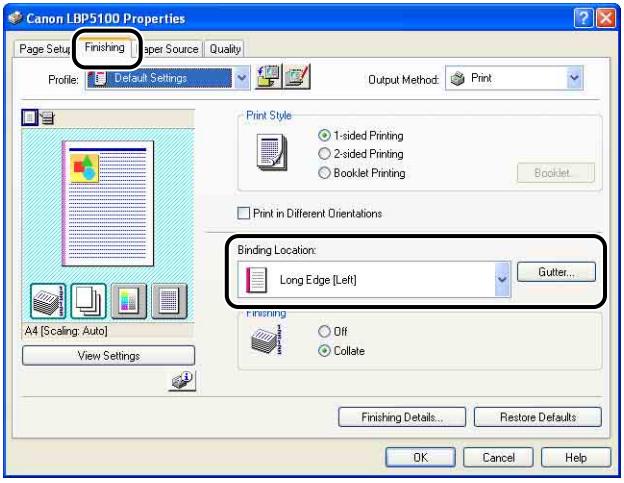


**2** **Specify the options as needed.**

NOTE

For more details on the settings, see "Various Pages in the Printer Driver" (p. 5-25) or Online Help. For details on methods for displaying Online Help, see "How to Use Online Help," on p. 5-79.

## 3 Confirm the settings, then click [OK].

The [Finishing] sheet reappears.

## 4 Confirm the settings, then click [OK].

## 5 Click [OK] or [Print].

The printer starts printing.

# Specifying the Paper Output Method

Select a paper output method from the following options in [Finishing] in the [Finishing] sheet.

- [Off]
  Printouts of a complete job are grouped.
  For example, if you are printing three copies of a 3-page document, printouts of a complete job are grouped, arranged in this page order: 1, 1, 1, 2, 2, 2, 3, 3, 3.
- [Collate]
  Printouts of a complete job are collated.
  For example, if you are printing three copies of a 3-page document, printouts of a complete job are collated, arranged in this page order: 1, 2, 3, 1, 2, 3, 1, 2, 3.

## 1 Display the [Finishing] sheet, then select the output method in [Finishing].

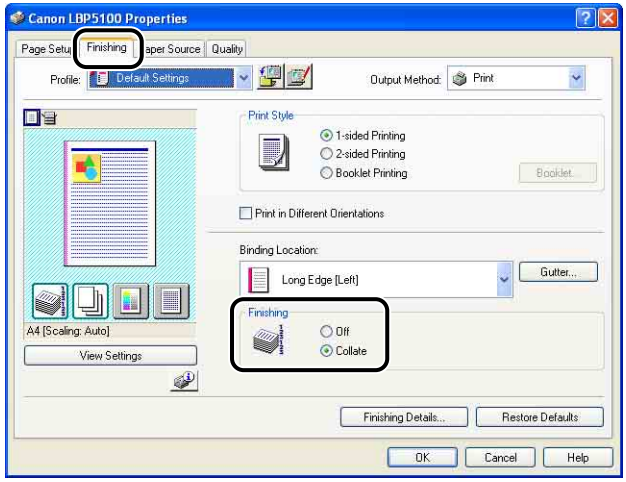

## 2 Confirm the settings, then click [OK].

## 3 Click [OK] or [Print].

The printer starts printing.

# Printing with Upper Left of Sheet as Starting Point

Since printing is usually performed with the upper-left 5 mm (10 mm for envelopes) margin within the printable area of a sheet as the starting point, a certain portion (lower right) may be missing when printing data with no margin. In this case, you can print with the upper-left 0 mm margin as the starting point by selecting the check box.

IMPORTANT

- The edge of paper may be missing partly, or optimum print quality may not be obtained depending on the print data to be printed.
- The function of [Print with Upper Left of Sheet as Starting Point] may be disabled depending on the application you are using.

## 1 Display the [Finishing] sheet, then click [Finishing Details].

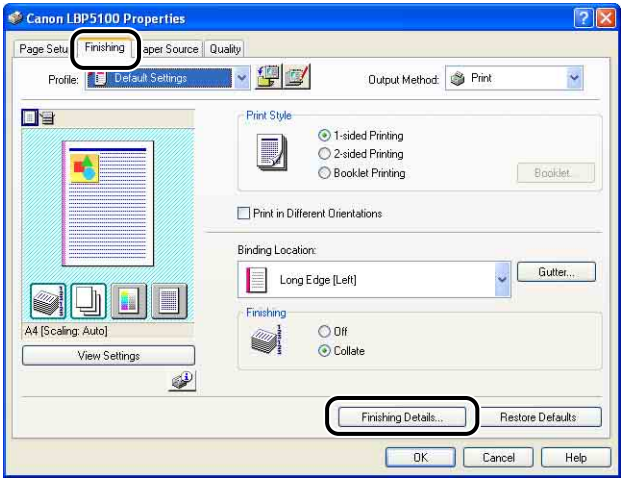

## 2 Select the [Print with Upper Left of Sheet as Starting Point] check box.

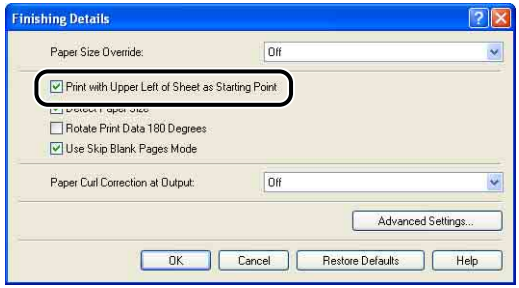


## 3 Confirm the settings, then click [OK].

The [Finishing] sheet reappears.

## 4 Click [OK].

## 5 Click [OK] or [Print].

The printer starts printing.

# Printing with the Data 180 Degrees Rotated

Prints with the image 180 degrees rotated.

This option is useful for printing envelopes and Index Card size media that can be fed only in specific orientations.

## 1 Display the [Finishing] sheet, then click [Finishing Details].

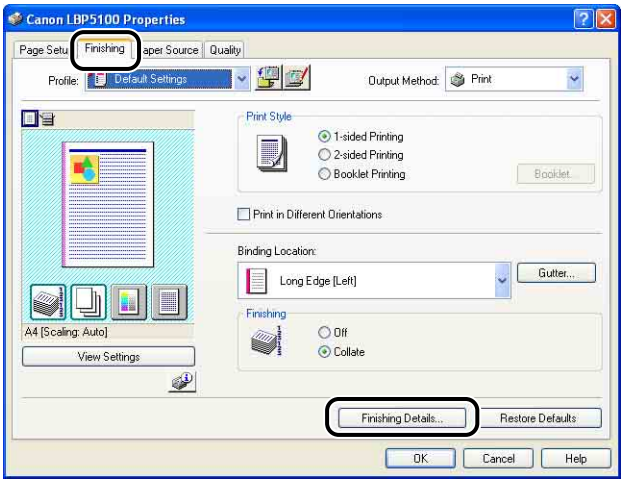


## 2 Select the [Rotate Print Data 180 Degrees] check box.

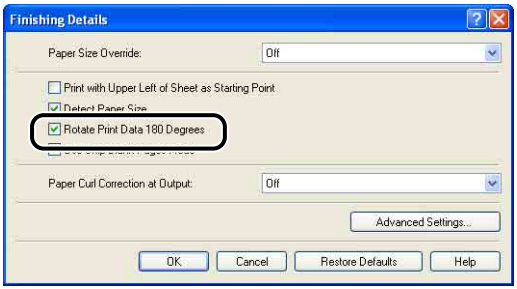


## 3 Confirm the settings, then click [OK].

The [Finishing] sheet reappears.

## 4 Click [OK].

## 5 Click [OK] or [Print].

The printer starts printing.

# Smoothing Out Rough-Textured Images

When image data such as photographic images are enlarged in size in an application and printed, the printed images can look rough or jagged. You can print this kind of low-resolution image data with smoothing it out.

## 1 Display the [Quality] sheet, then click [Settings].

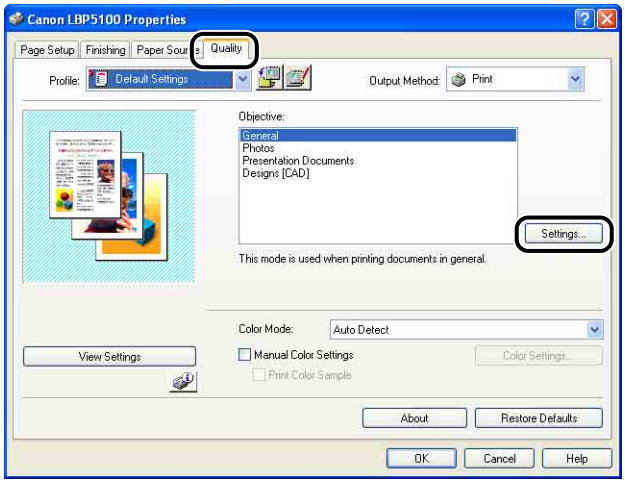

## 2 Select the [Enable Image Correction] check box.

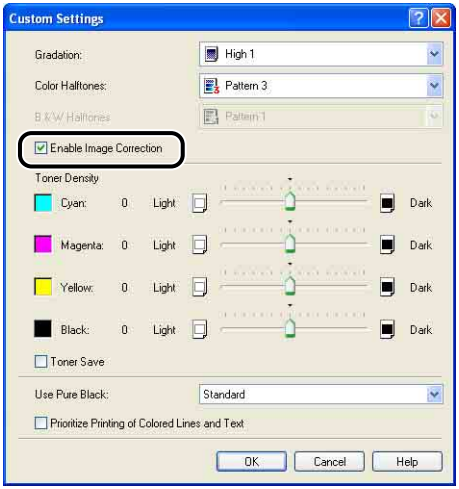


## 3 Confirm the settings, then click [OK].

The [Quality] sheet reappears.

## 4 Click [OK].

## 5 Click [OK] or [Print].

The printer starts printing.

# Printing with Toner Density Adjusted

You can print with the toner density of each color (black, yellow, magenta, and cyan) adjusted.

## 1 Display the [Quality] sheet, then click [Settings].

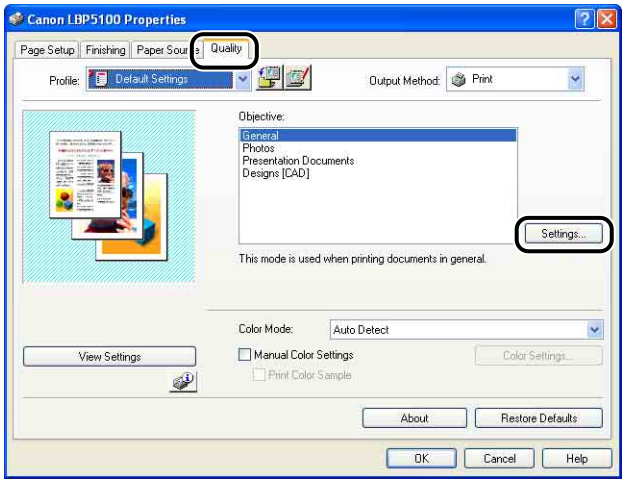


## 2 Adjust the toner density by dragging the [Toner Density] slider of each color from side to side.

Move the slider to the right to make it darker and to the left to make it lighter.

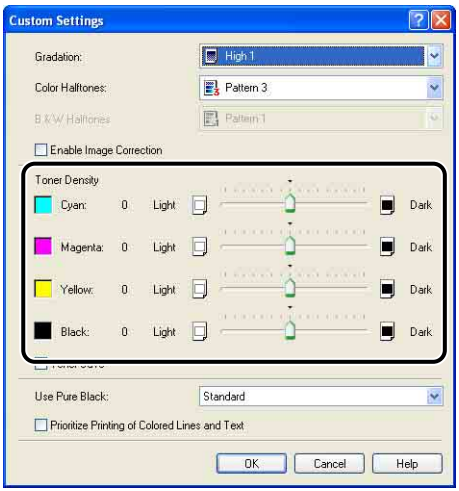

## 3 Confirm the settings, then click [OK].

The [Quality] sheet reappears.

## 4 Click [OK].

## 5 Click [OK] or [Print].

The printer starts printing.

# Color Settings

You can perform color printing with the colors originally specified.

## 1 Display the [Quality] sheet, select the [Manual Color Settings] check box, and then click [Color Settings].

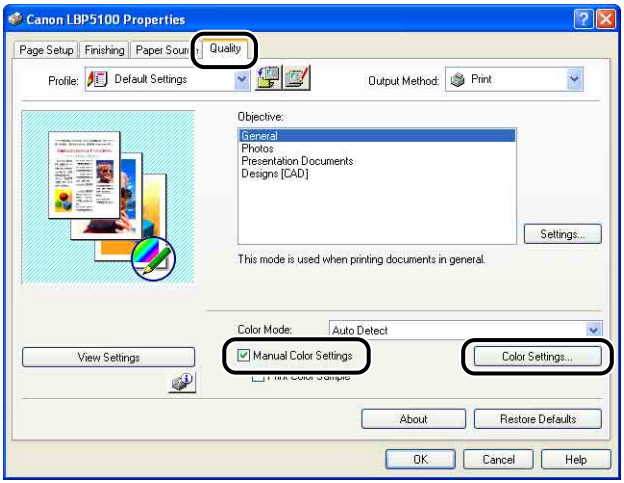


## 2 Display the [Color Adjustment] sheet, then adjust the colors by moving the [Preview Image] at the center of [Adjustment Grid] from side to side or up and down.

When [Preview Image] is in the center, the image has not been adjusted. There are three methods to adjust it as follows:

- Clicking the buttons of each color around [Adjustment Grid] to deepen the color by one increment.

- [Preview Image] is moved to the desired color you clicked on [Adjustment Grid].
- Dragging [Preview Image] in the center onto the desired color.

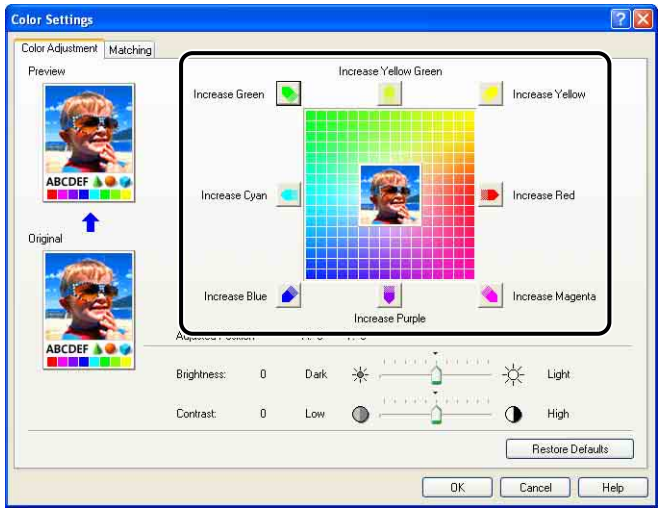


## 3 Confirm the settings, then click [OK].

The [Quality] sheet reappears.

---

If you are using Windows 2000/XP/Server 2003, you can print an adjusted color sample. For more details, see "Printing a Color Sample (Windows 2000/XP/Server 2003 only)," on p. 5-71.

---

# Specifying the Brightness and Contrast

You can perform color printing with the brightness and contrast specified.

**1** **Display the [Quality] sheet, select the [Manual Color Settings] check box, and then click [Color Settings].**

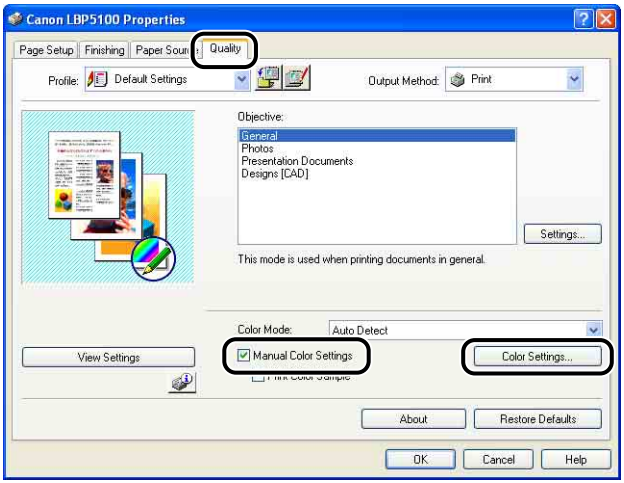

## 2 Display the [Color Adjustment] sheet, then adjust the brightness and contrast for the print data.

Move the [Brightness] slider to the right to make it lighter and to the left to make it darker.
Move the [Contrast] slider to the right to make it higher and to the left to make it lower.

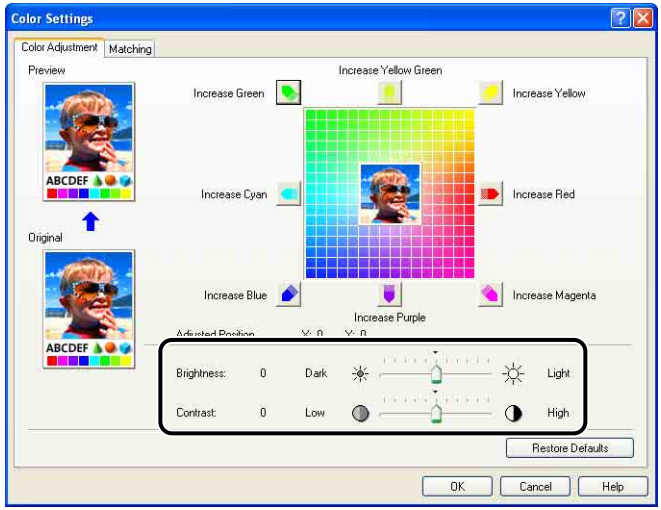


## 3 Confirm the settings, then click [OK].

The [Quality] sheet reappears.

---

If you are using Windows 2000/XP/Server 2003, you can print a sample after adjusting the brightness and contrast. For more details, see "Printing a Color Sample (Windows 2000/XP/Server 2003 only)," on p. 5-71.

---

# Printing a Color Sample (Windows 2000/XP/Server 2003 only)

You can print an adjusted color sample after specifying the settings in the [Color Adjustment] sheet. [Preview] is printed in the center of the paper, and this is surrounded by images where the color tone is changed by 1 unit in each of the corresponding directions. This is useful to adjust the colors on the printed paper.

**1** **If you are using Windows 2000/XP/Server 2003, display the [Device Settings] sheet, and then make sure that [Spooling at Host] is set to [Auto].**

**2** **Display the [Quality] sheet, select the [Manual Color Settings] check box, and then select the [Print Color Sample] check box.**

When printing a sample after adjusting the brightness or contrast, set [Color Mode] to [Black and White].

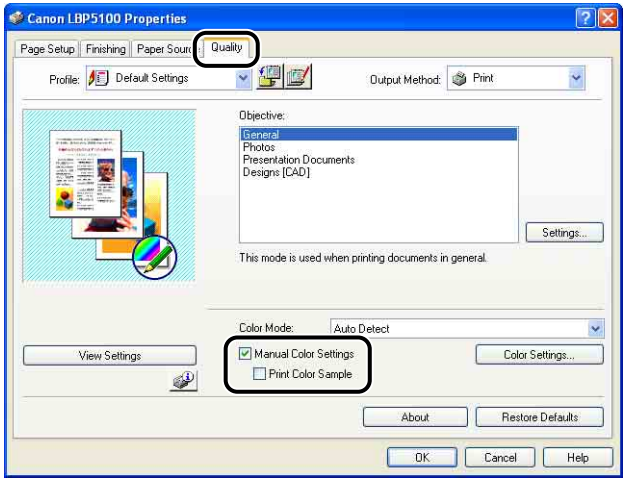


**3** **Confirm the settings, then click [OK].**

IMPORTANT

When printing a color sample, be sure to set [Page Layout] in the [Page Setup] sheet to [1 Page per Sheet].

## 4 Click [OK] or [Print].

The color sample is printed.

IMPORTANT

When you are finished with printing color samples, clear the [Print Color Sample] check box.

# Specifying "Profiles"

You can save or import all the printing preferences specified in the [Page Setup], [Finishing], [Paper Source], and [Quality] sheets at once. You can also add, edit or select the settings.

Save the printing preferences as a "Profile" using the following procedure.

Make sure that any one of the [Page Setup], [Finishing], [Paper Source] and [Quality] sheets is displayed, then perform the following procedure.

IMPORTANT

The settings using the following options in the [Quality] sheet - [Custom Settings] dialog box cannot be added as a "Profile".
- [Color Halftones]
- [B & W Halftones]
- [Use Pure Black]
- [Prioritize Printing of Colored Lines and Text]

NOTE

- For Windows 98/Me, up to 50 "Profiles" can be added. To make it possible to add up to 50 "Profiles" for each user account, double-click [My Computer] → [Control Panel] → [Passwords] to display the [User Profiles] sheet, and then select [Users can customize their preferences and desktop settings.].
- For Windows 2000/XP/Server 2003, up to 50 "Profiles" for each user account can be added.
- If the printer name has been changed, any saved "Profiles" cannot be imported. To import the saved "Profiles", change the printer name to its previous one.
- The "Profile" information file saved on Windows 98/Me cannot be used on Windows 2000/XP/Server 2003 and vice versa.

## Adding a "Profile"

**1** **In the [Page Setup], [Finishing], [Paper Source], and [Quality] sheets, specify the printer settings that you want to add.**

**2** **Click [ ] (Add Profile).**

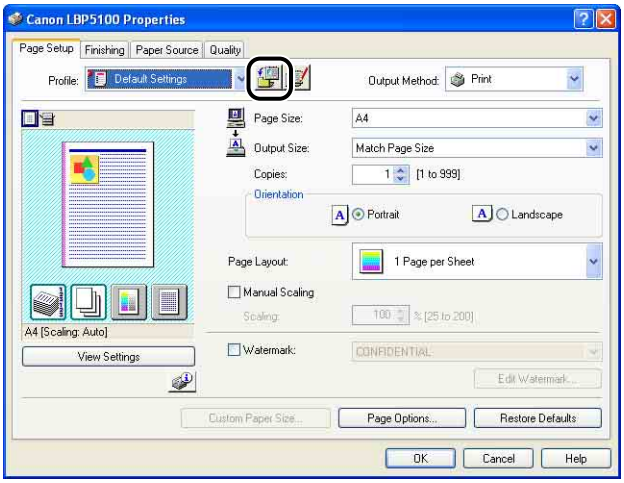


**3** **Enter the name of the "Profile" in [Name].**

[Icon] allows you to select the icon for the "Profile". Enter any comments in [Comment] as needed.

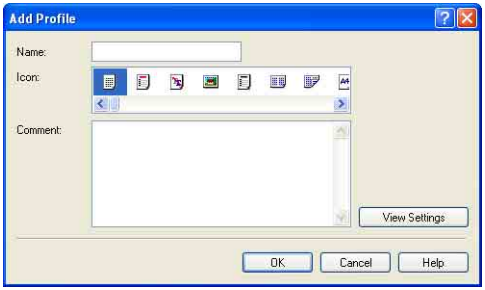


NOTE

You can enter up to 31 characters for [Name] and up to 255 characters for [Comment].

● **Confirming the Printer Settings**

❑ Click [View Settings].

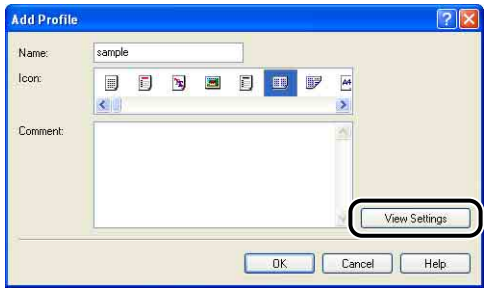


❑ When [OK] is clicked, the [Add Profile] dialog box reappears.

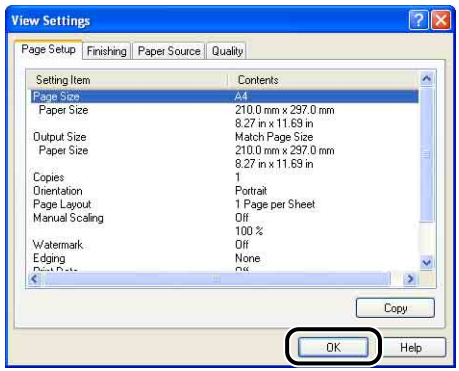


## 4 Click [OK].

The Properties dialog box reappears.

Make sure that the name of the added "Profile" is in [Profile List].

## Editing/Deleting a Profile

You can change or save the Profile information or delete it from [Profile List].

### 1 Click [ ] (Edit Profile).

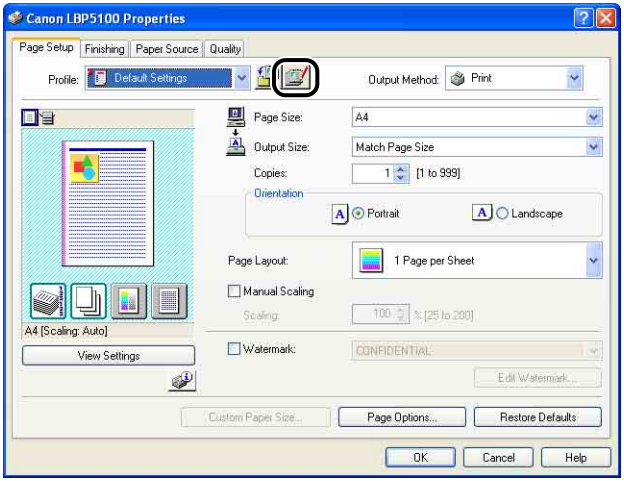


### 2 Edit information about the "Profiles".

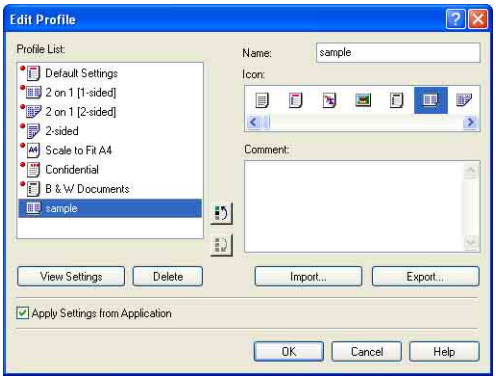


● **Editing a Profile**

❑ You can change the settings for [Name], [Icon], and [Comment].

❑ By clicking [ ] or [ ], you can change the order of the selected "Profile".

❑ When [Import] is clicked, information about the "Profiles" is imported from the previously saved file.

❑ When [Export] is clicked, information about the selected "Profile" is saved into the file. The "Profile" saved in the file can be used again even if it is deleted from the list.

❑ When the [Apply Settings from Application] check box is selected, the settings for [Page Size], [Orientation], and [Copies] specified in the application are applied to printing. The settings for these options in the application stay enabled even if the "Profiles" is changed.

### ● Deleting a Profile

❑ When [Delete] is clicked, the "Profile" is deleted from the list.

**IMPORTANT**

You can delete only custom "Profiles". You cannot delete the default "Profiles". Also, you cannot delete the "Profile" currently selected in each sheet.

## Editing Jobs with PageComposer



You can combine two jobs into one and change the job settings for the combined job. You can edit a job in another application.
You can also preview the job.

Make sure that any one of the [Page Setup], [Finishing], [Paper Source], or [Quality] sheet is displayed in the [Document Properties] dialog box, then perform the following procedure:

### 1 Select [Edit and Preview] from [Output Method].

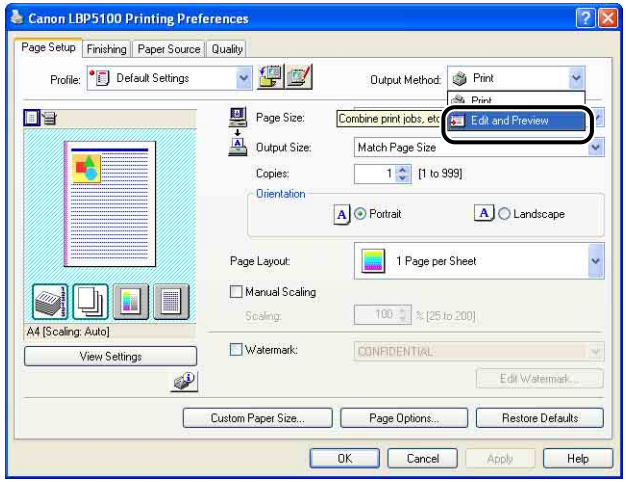

## 2 The message that informs you that the output method is going to be switched to the [Edit and Preview] mode is displayed. Click [OK].

## 3 Specify the printing preferences in each sheet, then click [OK].

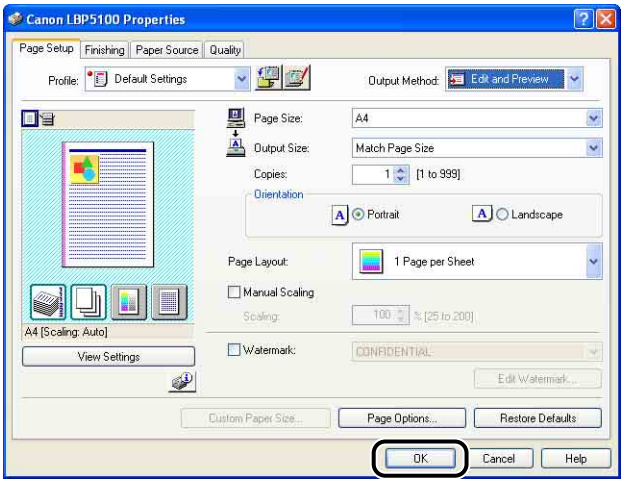


The [Print] dialog box reappears.

## 4 Click [OK] or [Print].

The [Canon PageComposer] dialog box is displayed, and the job is displayed on a list.

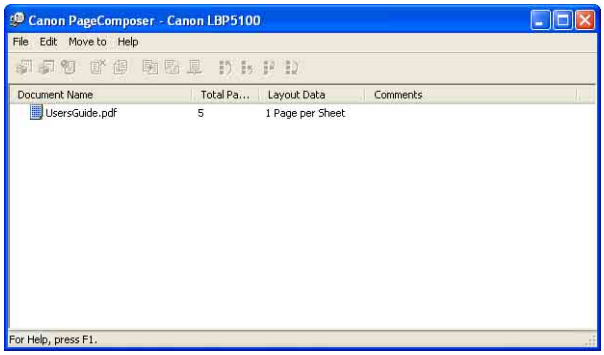


## 5 Repeat Step 1 to 4 for the jobs that you want to edit.

## 6 Edit the jobs on the list in the [Canon PageComposer] dialog box.

NOTE

- For more details on the setting procedures for the [Canon PageComposer] dialog box, see Help for Canon PageComposer.
- When the [Edit and Preview] mode is selected in the [Printer Properties] dialog box and [ ] (Lock) is set, the [Canon PageComposer] dialog box appears each time you print.

# How to Use Online Help

For details on using the printer driver or the Printer Status Window, display Online Help using the following procedure to see the instructions in it.

## Displaying Online Help on the Options Displayed on the Screen

There are three methods to display Online Help on the windows of the printer driver or the Printer Status Window.

- Right-click the item of which you want to display Online Help, then click [What's This?] from the pop-up menu.

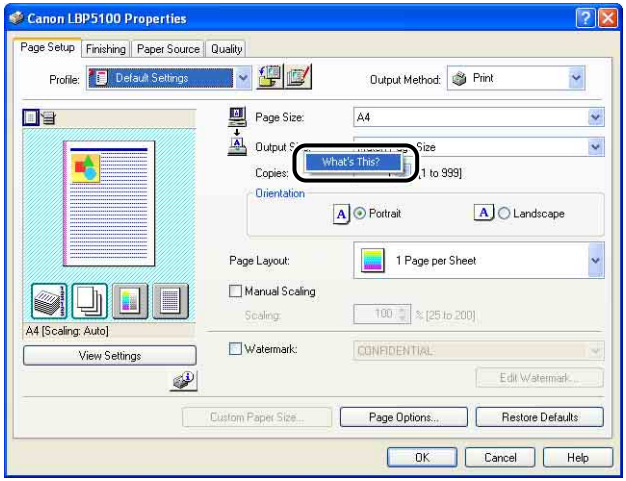

- Click [?] (Help) on [Titlebar], move the [?]-attached cursor to the item of which you want to display Help, then click it.

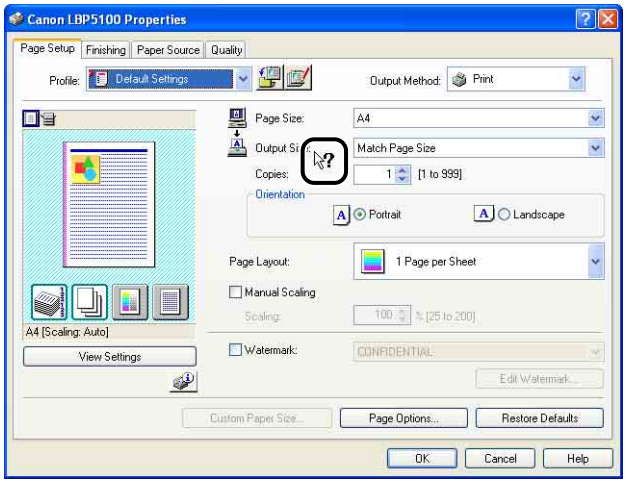


- Press the [TAB] key on your keyboard to select the item of which you want to display Help, then press the [F1] key.

## Displaying Online Help on the Operation Procedures

Display the procedures for operating the printer driver or the Printer Status Window using the following procedure.

### 1 Click [Help].

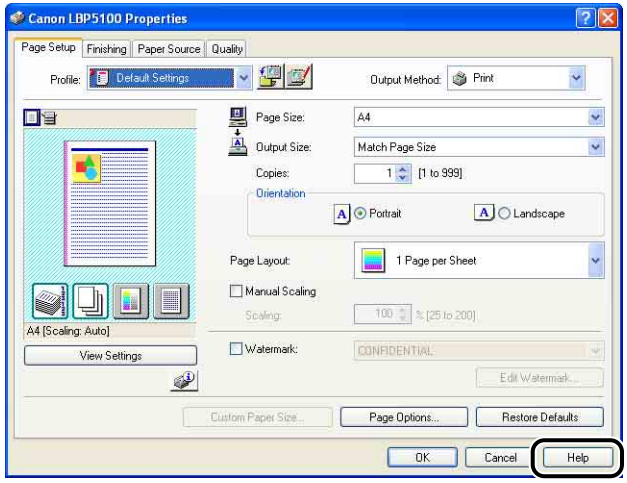

## 2 Click [Contents].

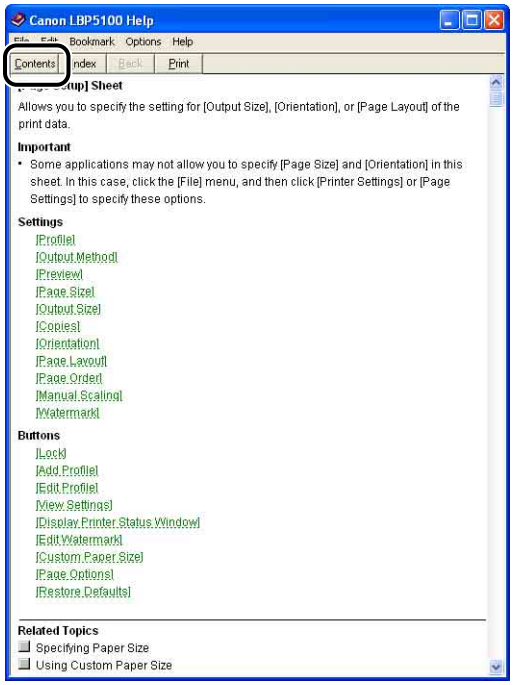


## 3 Double-click the title of which you want to know the operation procedure.

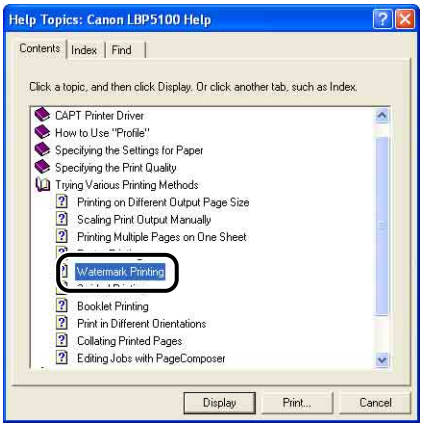

# Retrieving the Option about Which You Want to Know with Keywords and Displaying its Online Help

Retrieve the option about which you want to know with keywords and display its Online Help using the following procedure.

## 1 Click [Help].

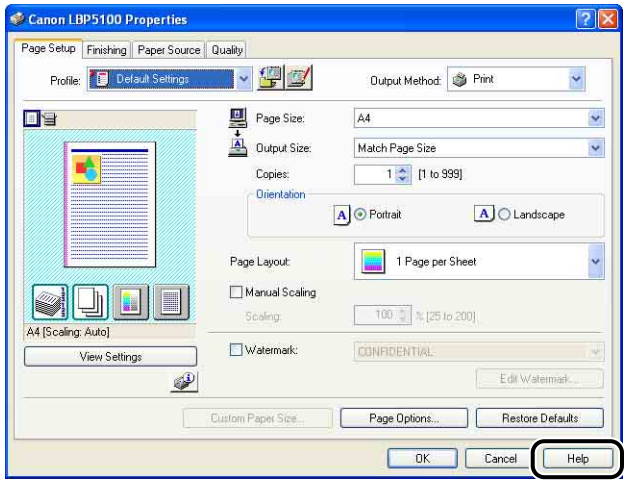

## 2 Click [Index].

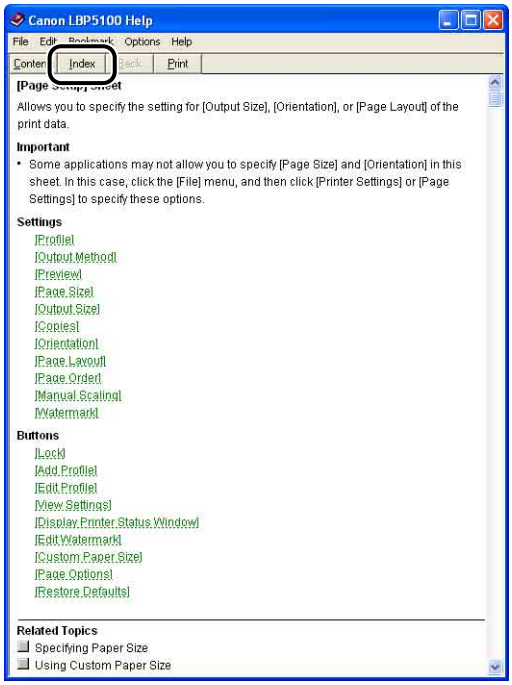


## 3 Enter the keyword to display the option about which you want to know.

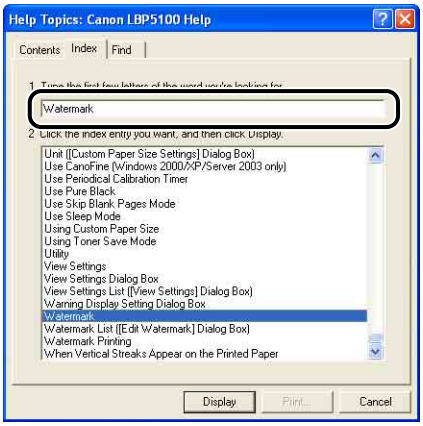

## 4 Double-click the title of the option about which you want to know.

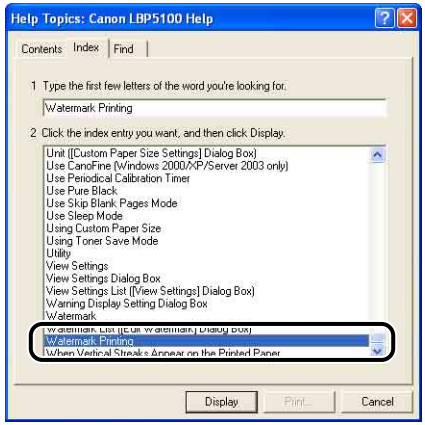


NOTE

Depending on your operating system, a list of words created automatically may be displayed on [Find]. You can also display Online Help by selecting a word that is related to the option about which you want to know from the displayed word list.

# Manuals

This section describes the procedures for installing or uninstalling the manuals included on the CD-ROM supplied with the printer on the computer you are using.

## Installing the Manuals

Install the manuals in the CD-ROM supplied with the printer on the computer using the following procedure.

### 1 Insert the supplied "LBP5100 User Software" CD-ROM into the CD-ROM drive.

If the CD-ROM is already in the drive, eject the disk and re-insert it into the drive.

IMPORTANT

If CD-ROM Setup does not appear, select [Run] from the [Start] menu, enter "D:\English\MInst.exe", and then click [OK]. (The CD-ROM drive name is indicated as "D:" in this manual. The CD-ROM drive name may differ depending on the computer you are using.)

### 2 Click [Custom Installation].

## 3 Clear the [Printer Driver] check box, then click [Install].

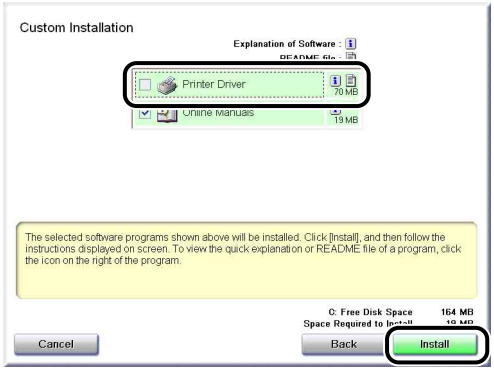


## 4 Confirm the contents, then click [Yes].

Installation of the instruction manuals starts.

## 5 When screen for completing the installation appears, click [Next].

## 6 Click [Exit].

The installation of the manuals is completed.
To see the manuals, double-click [LBP5100 Online Manuals] created on the desktop to display respective manuals or select [Canon LBP5100] - [LBP5100 Online Manuals] added to [All Programs] ([Programs] for Windows 98/Me/2000) under the [Start] menu.

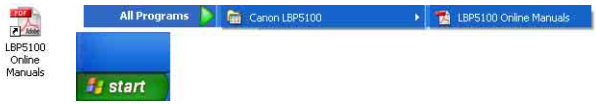

# Uninstalling the Manuals

The installed manuals can also be uninstalled by uninstalling the CAPT software using the Uninstaller. For details on uninstalling the CAPT software, see "Uninstalling the CAPT Software," on p. 4-76.

When uninstalling only the manuals without uninstalling the CAPT software, put the following folders in the Recycle Bin to delete them.

- "\Program Files\Canon\LBP5100"
  - "Manuals" folder
- For Windows 2000/XP/Server 2003: "\Documents and Settings\All Users\Start Menu\Programs"
  - [Canon LBP5100] folder
- For Windows 98/Me: "\WINDOWS\Start Menu\Programs"
  - [Canon LBP5100] folder
- Desktop
  - [LBP5100 Online Manuals] (Shortcut for [Index.pdf])

IMPORTANT

If the manuals are installed on Windows 2000/XP/Server 2003 logged on by a user who is a member of Administrators, they cannot be uninstalled from the computer logged on by anyone other than users who are members of Administrators. Be sure to log on as a member of Administrators before the uninstallation.

# Printer Status Window

The Printer Status Window shows the printer status of LBP5100 (such as the operation status and job information) with messages, animations, sounds, and icons.

You can perform the following operations using the Printer Status Window. If you find any problem with the printer, check the Printer Status Window.

- You can check the contents and remedies for the problem when an error has occurred in the printer or printing is not performed (See p. 7-20)
- You can delete or pause a job (See p. 5-16)
- You can check the amount of toner remaining (See p. 5-95)
- You can register the size of paper to be loaded in the paper cassette (See p. 3-17)
- You can check information (the user name, document name, etc.) about the current print job.

NOTE

To activate a sound, your computer must have a PCM synthesizer, and have the driver for PCM synthesizer installed.

# Functions on the Printer Status Window

The functions on the Printer Status Window are the same on both Windows 98/Me and Windows 2000/XP/Server 2003.

For more details on operations, see Online Help. For details on methods for displaying Online Help, see "How to Use Online Help," on p. 5-79.

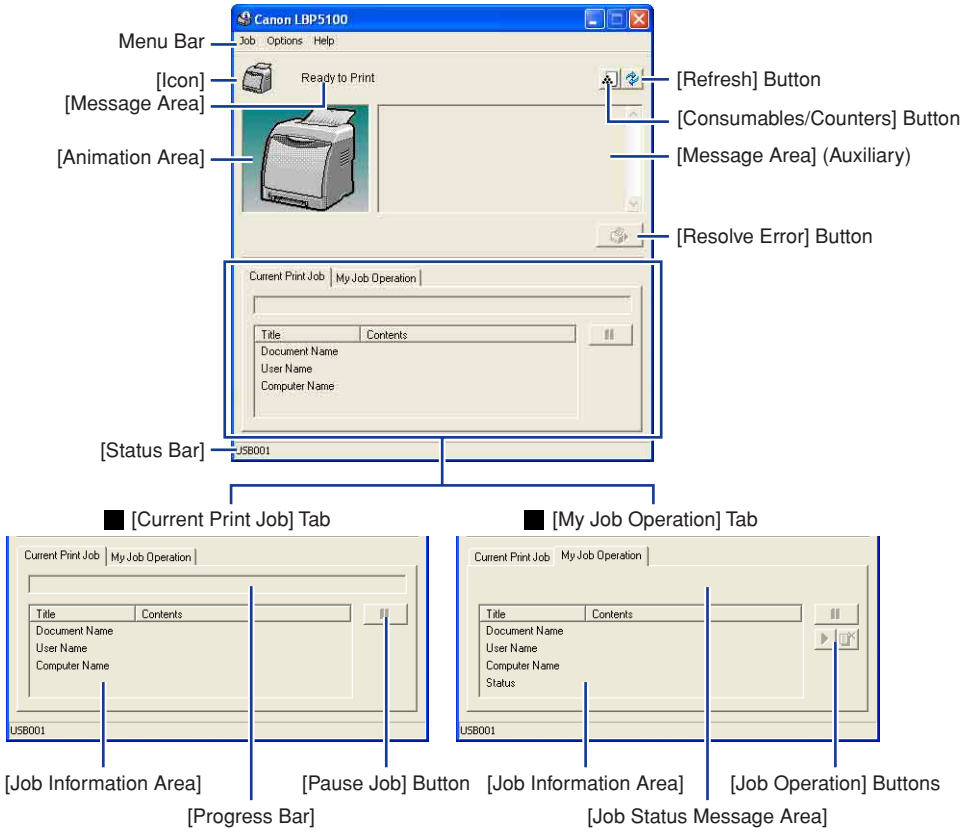


## ■ Menu Bar

| | |
|---|---|
| [Job] Menu | Performs a job operation (pause, resume, or delete). Also, when a job is paused for some reason, you can resume the job by selecting [Resolve Error]. The current job for which you have no access permission is grayed out. |
| [Options] Menu | Allows you to change the preferences for the Printer Status Window and perform calibration of the printer. |
| [Help] Menu | Allows you to search for the desired items using keywords and displays [About] (the version information) of the Printer Status Window. |

## ■ Other Functions

| | |
|---|---|
| [Icon] | Displays the printer status. |
| [Message Area] | Displays the current printer status with a short message. |
| [Message Area] (Auxiliary) | Displays additional information when an error occurs, etc. |
| [Animation Area] | Displays the printer status with an animated graphic. The background color changes from blue (normal) to orange when user action is required, or to red when a warning is issued. |
| [Consumables/Counters] Button | Displays the [Consumables/Counters] dialog box. The dialog box displays icons and messages about the life of each of the color toner cartridges. Also displays the total number of printed pages. |
| [Refresh] Button | Obtains the printer status and refreshes the Printer Status Window display. |
| [Resolve Error] Button | Allows you to resume a job when the job is paused for some reason. |
| [Current Print Job] Tab | [Progress Bar]:<br>Indicates the progress of the current job by showing the number of printed pages or changing the background color.<br><br>[Pause Job] Button:<br>Pauses the job temporarily.<br><br>[Job Information Area]:<br>Displays information about the job. |
| [My Job Operation] Tab | [Job Status Message Area]:<br>Displays a message about the status of the job.<br><br>[Job Operation] Buttons:<br>Performs a job operation (pause, resume, or delete). The current job for which you have no access permission is grayed out.<br><br>[Job Information Area]:<br>Displays information about the job. |
| [Status Bar] | Displays the device to which the printer is connected.<br>Instructions for operating the menu are displayed during menu operation. |

# Displaying the Printer Status Window

There are the following two ways to display the Printer Status Window:

- Run by clicking [ ] (Display Printer Status Window) in locations such as in the [Page Setup] sheet in the [Document Properties] dialog box.

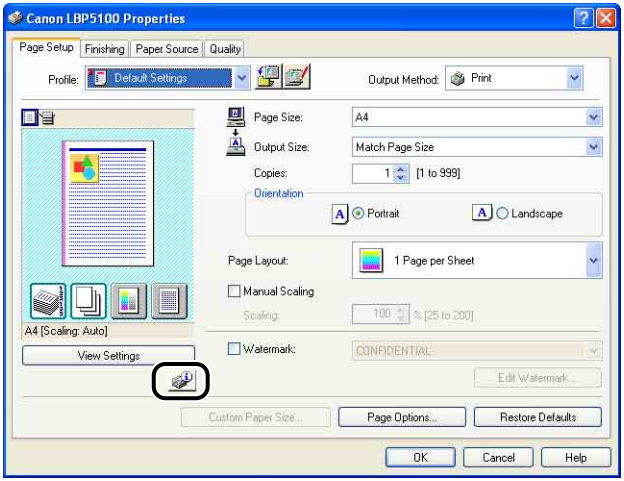


- Display the [Printer Properties] dialog box and display the [Configuration]/[Device Settings] sheet, and then select the [Show Icon in the Taskbar] check box. The icon for the Printer Status Window is displayed in the Windows taskbar. Click the icon, then click the printer name to run it.

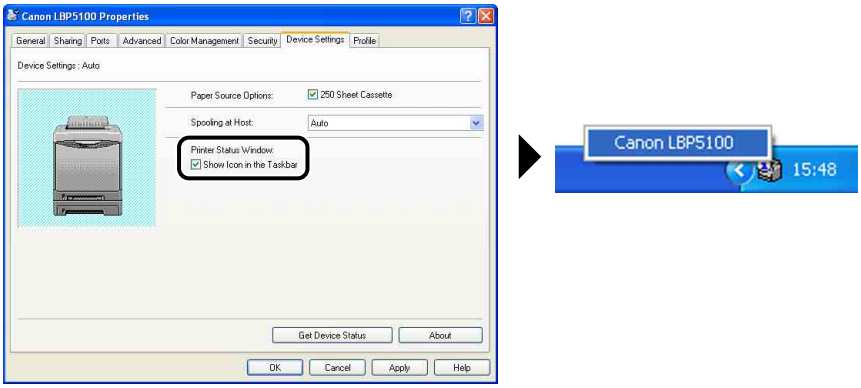

The Printer Status Window appears as follows during printing or when an error occurs.

• During printing

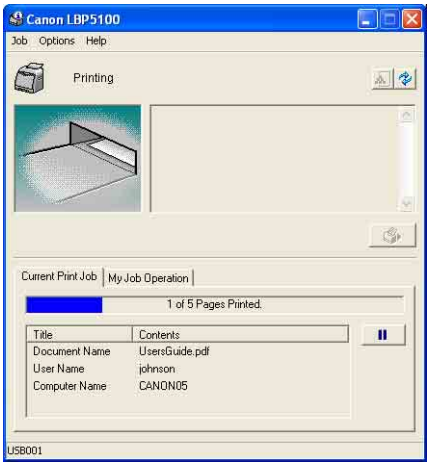


• When an error occurs

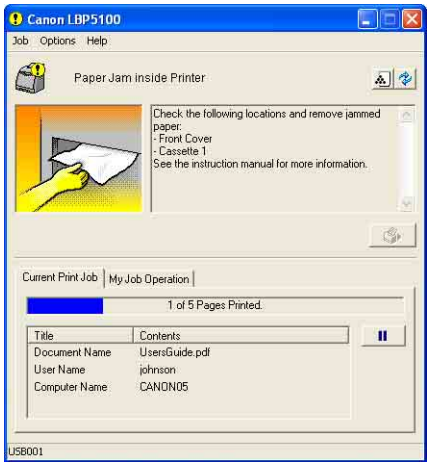


The status of the Printer Status Window varies depending on the printer operation as follows.

| Operation | | Status of the Printer Status Window | | |
|---|---|---|---|---|
| | | Not running | Displayed with the window minimized*1 | Displayed on the screen |
| When a print job starts | | Runs*2 with the window minimized*1 | Does not change | Does not change |
| When a print job finishes | | Exits automatically*2 | Does not change | Does not change |
| During idling | When an error occurs | Does not change | Blinks with the window minimized*1 | Does not change |
| | When an error is solved | Does not change | Stops blinking with the window minimized*1 | Does not change |
| During printing | When an error occurs | Displayed on the screen*3 | Displayed on the screen | Does not change |
| When a toner cartridge needs to be replaced soon | | Does not change | Blinks with the window minimized*1 | Does not change |

*1 Indicates the status of the Printer Status Window displayed in the Windows taskbar as follows.

*2 When [Display Settings] in the [Preferences] dialog box is set to [When Starting Printing] (See "[Preferences] Menu," on p. 5-94)

*3 When [Display Settings] in the [Preferences] dialog box is set to [When Starting Printing] or [Only when Errors Occur] (See "[Preferences] Menu," on p. 5-94)

# [Preferences] Menu

The [Preferences] menu allows you to select a method for displaying the Printer Status Window automatically, specify the sound settings, and make the Printer Status Window monitor the printer status.

For more details on each setting, see Online Help. For details on methods for displaying Online Help, see "How to Use Online Help," on p. 5-79.

## 1 Select [Preferences] from the [Options] menu.

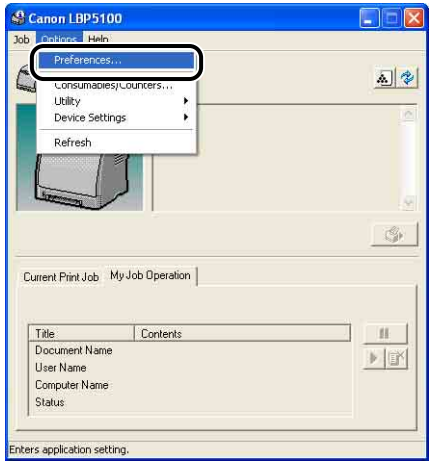


The [Preferences] dialog box is displayed.

## 2 Confirm each of the settings, then click [OK].

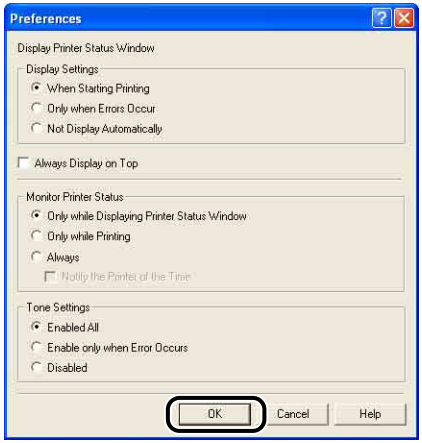


IMPORTANT

When [Only when Errors Occur] is specified, the Printer Status Window is not displayed automatically during printing. Therefore, manually display the Printer Status Window periodically to check messages other than error messages (such as the messages indicating that the printer's consumables need to be replaced).

# [Consumables/Counters] Menu

Select [Consumables/Counters] from the [Options] menu to display the [Consumables/Counters] dialog box. In the [Consumables/Counters] dialog box, icons and messages that indicate life of toner cartridges of each color and the number of total printed pages are displayed.

You can obtain the same result by clicking [ ] (Consumables/Counters) in the Printer Status Window.

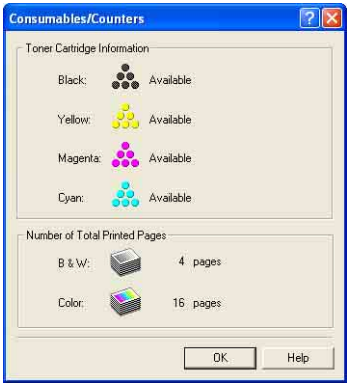

## [Utility] Menu

The [Utility] menu performs calibration of the printer or Configuration Page Print.

### ■ [Calibration]

Performs calibration of the printer manually. Perform calibration when the colors have changed and the data is not printed in the correct colors (specified colors) or a phenomenon of "Out-of-Register Colors" occurs. For more details, see "Calibrating the Printer," on p. 6-16.

### ■ [Cleaning]

When the front or back of the printed paper has smudge marks, the fixing roller needs to be cleaned. Print quality deterioration can be prevented by cleaning the fixing roller. For more details, see "Cleaning the Fixing Roller," on p. 6-22.

### ■ [Configuration Page Print]

Prints the optional settings of the printer, the settings for [Device Settings] in the [Options] menu, and the current printer status such as the total number of printed pages. For more details, see "Confirming the Printer Features," on p. 7-56.

### ■ [Network Status Print] (Only when the network board is installed)

Prints the version of the optional network board or the TCP/IP settings. For more details, see "Chapter 4 Troubleshooting" in Network Guide.

## [Device Settings] Menu

You can specify the settings related to the printer, such as specifying the size of the paper in the paper cassette, sleep settings, and the settings for calibration.

### ■ [Register Paper Size in Cassettes]

Specifies the size of the paper loaded in the paper cassette. For more details, see "Loading Plain Paper, Heavy Paper, Transparencies, or Labels in the Paper Source" (p. 3-17), "Loading Index Card Size Media in the Paper Source" (p. 3-29), "Loading Envelopes in the Paper Source" (p. 3-40), and "Loading Custom Size Paper (Non-Standard Paper) or Paper at a Size of Statement, Foolscap, or 16K in the Paper Source" (p. 3-51).

### ■ [Sleep Settings]

Specify whether to use the sleep mode or the time to switch to the sleep mode. When data is not sent from the computer or when the printer status remains as it is longer than the time specified in [Time to Enter Sleep Mode], the printer switches to the sleep mode. The sleep mode consumes less power during the sleep state. When you use the sleep mode, select the [Use Sleep Mode] check box, and then specify the time to switch to the sleep mode in [Time to Enter Sleep Mode]. For more details, see "Power Saving (Sleep Mode)," on p. 2-38.

### ■ [Calibration Settings]

You can set the printer to perform calibration automatically at the designated time everyday. Also, you can specify whether the printer performs calibration automatically when data is not sent from the computer or when the printer status remains as it is longer than the fixed period. Additionally, you can specify whether calibration should be prioritized immediately after the printer is turned ON or when calibration needs to be performed for some reason.

### ■ [Warning Display Setting]

Specify whether to display the message that warns you of the printer status (the message indicating that the toner cartridge needs to be replaced) in the Printer Status Window.

### ■ [Network Settings] (Only when the network board is installed)

If you are using Windows XP Service Pack 2 or another operating system equipped with Windows Firewall, and the network settings for the printer is not specified, the printer may not be detected when installing the software for the network environment. In this case, connect the printer and computer with the USB cable, install the printer driver, and then specify the network settings in this dialog box in advance. For more details, see "Network Guide".

### ■ [Assisting Print Settings]

You can specify the method for printing data that contains both color pages and black-and-white pages and for handling the printer when vertical streaks appear on the printed paper.

## [Refresh]

Selecting [Refresh] from the [Options] menu obtains the latest printer status and refreshes the Printer Status Window display.

You can obtain the same result by clicking [ ] (Refresh) in the Printer Status Window.

## [Resolve Error]

When a job is paused for some reason, you can resume the job by selecting [Resolve Error] from the [Job] menu. Resuming a job by selecting [Resolve Error] may cause unexpected print results. [Resolve Error] is disabled in any of the following cases:

- When the job is paused due to a printer error such as a paper jam and paper-out condition
- When another user's job is paused ([Resolve Error] is enabled on the print server if the printer is shared on a network)

You can obtain the same result by clicking [ ] (Resolve Error) in the Printer Status Window.

IMPORTANT

If the message <Insufficient Disk Space> is displayed in the Printer Status Window, delete unnecessary files, then select [Resolve Error].

## Displaying Printer Status When Using a Print Server

The status of a network printer can be displayed on the client's Printer Status Window as well as on the print server's.

If the print server has not been started up, the Printer Status Window is not displayed in the client computers.

- Printer Status of the Print Server
  - Displaying the Printer Status Window and Job Operation

| [Current Print Job] Tab | | [My Job Operation] Tab | | Job Operation |
|---|---|---|---|---|
| [Job Information Area] | [Pause Job] Button | [Job Information Area] | [Job Operation] Buttons | |
| Displays the first job | Enabled*1 | Displays the first job*2 | Enabled | [Pause Job]: Pauses all the jobs<br>[Resume Job]: Resumes all the jobs<br>[Delete Job]: Deletes the first job |

*1 The [My Job Operation] tab is displayed by clicking the [Pause Job] button.

*2 If any job is printed by the computer as the print server, the job is displayed.

  - Plays a sound.
  - If the print server is running Windows 2000/XP/Server 2003, the status is not displayed when no one is logged on. (Printing is possible.)

• Printer Status at the Clients

- Displaying the Printer Status Window and Job Operation

| [Current Print Job] Tab | | [My Job Operation] Tab | | Job Operation |
|---|---|---|---|---|
| [Job Information Area] | [Pause Job] Button | [Job Information Area] | [Job Operation] Buttons | |
| Displays the first job on the print server | When your job is displayed in [Job Information Area]: Enabled*<br>When another user's job is displayed in [Job Information Area]: Disabled | Displays your first job | Enabled | [Pause Job]: Pauses all your jobs<br>[Resume Job]: Resumes all your jobs<br>[Delete Job]: Deletes your first job |

* The [My Job Operation] tab is displayed by clicking the [Pause Job] button.

- You cannot use the [Resolve Error] button when another user's job is paused.
- While another user's job is being printed, [Progress Bar] is displayed in gray.
- Sounds are played only from the clients whose user name is verified by the print server.

NOTE

To display the printer status when printing a job over the network, a network environment that uses one of the following protocols is required.

- TCP/IP
- NetBEUI

# Routine Maintenance

6
CHAPTER

This chapter describes the procedures for maintaining the printer such as replacing the cartridges and cleaning the printer.


Replacing Toner Cartridges . . . . . 6-2
When a Message Appears . . . . . 6-2
Replacing Toner Cartridges . . . . . 6-4
Precautions for Handling Toner Cartridges . . . . . 6-13
Storing Toner Cartridges . . . . . 6-15
Calibrating the Printer . . . . . 6-16
Performing Calibration Manually . . . . . 6-16
Performing Calibration Automatically at the Designated Time . . . . . 6-17
Performing Calibration Automatically . . . . . 6-19
Specifying Whether Calibration Should Be Prioritized . . . . . 6-20
Cleaning the Fixing Roller . . . . . 6-22
Cleaning the Static Charge Eliminator . . . . . 6-24
Cleaning the Outside of the Printer . . . . . 6-26
Moving the Printer . . . . . 6-29
Handling the Printer . . . . . 6-38

# Replacing Toner Cartridges

This section describes how to replace or handle toner cartridges and precautions on storing them.

## When a Message Appears

Toner cartridges are consumable products. When a toner cartridge is nearing the end of its life, a message will appear in the Printer Status Window. Follow the directions in the message.

| Message | When it is Displayed | Contents and Remedies |
|---|---|---|
| <The (Toner Color)* toner cartridge needs to be replaced soon.> | When a toner cartridge needs to be replaced soon | - You can continue to print.<br>- Have ready a new toner cartridge of the indicated color.<br>- It is recommended that you replace the toner cartridge before printing a large amount of data. |
| <Check the Toner Cartridges><br><Toner cartridges with print quality that cannot be guaranteed due to their decreasing lifetime etc., or used toner cartridges that have reached their lifetime, may have been inserted. Continuing to use these cartridges may cause a malfunction, so replacing these cartridges with new cartridges is recommended.<br>For details, check the [Consumables/ Counters] dialog.> | When a toner cartridge has reached the end of its life | - The printer stops printing<br>- You can continue printing by clicking the [Resolve Error] button, however, as this may result in damage to the printer, it is recommended to replace the toner cartridge with a new one. |
| <Toner Cartridge Replacement Required><br><The life of the <Toner Color>* toner cartridge has come to an end. Open the front cover to replace the toner cartridge.> | When a toner cartridge has reached the end of its life | - When the black toner cartridge has reached the end of its life, the printer stops printing, and you cannot continue the job.<br>- When any of the toner cartridges (other than black) has reached the end of its life, you can print only in black and white.<br>- Replace the toner cartridge of the indicated color with a new one. |

* Black, yellow, magenta, or cyan will appear in (Toner Color) (More than one color may appear.).

IMPORTANT

If the printing appears faint or inconsistent even when a message does not appear, this may be due to any toner cartridge reaching the end of its life. Do not continue to use the toner cartridge and replace it with new one when there is deterioration in print quality. When you are replacing a toner cartridge, be sure to use a toner cartridge designed for this printer.

| Model Name | Supported Canon Genuine Toner Cartridge |
|---|---|
| LBP5100 | Cartridge 707 Black<br>Cartridge 707 Yellow<br>Cartridge 707 Magenta<br>Cartridge 707 Cyan |

NOTE

- The lifetime of the toner cartridges (Canon Genuine Cartridges) used in this printer are as follows. The numbers of the pages are estimated when printing in the following conditions.
  Printing ratio: 5 %; Print density: the default; Paper size: A4 or Letter; Paper type: plain paper
  - Cartridge 707 Black: approx. 2,500 pages
  - Cartridge 707 Yellow: approx. 2,000 pages
  - Cartridge 707 Magenta: approx. 2,000 pages
  - Cartridge 707 Cyan: approx. 2,000 pages
- Depending on the printing preferences or printing environment such as the intermittency of printing, paper types and paper sizes, the number of pages you can print may be half this number.
- Even when the toner consumption is low due to low printing ratio, printing of the expected number of print pages may not be able to be achieved. Also, if you print in color, more than one cartridges may reach the end of their life at the same time.
- Even if you print in black and white, this may affect the life of the cartridges of magenta, yellow, and cyan due to the printer structure.
- The [Consumables/Counters] dialog box in the Printer Status Window can be used to estimate when toner cartridges will need to be replaced. The status of each of the color toner cartridges is displayed in the [Consumables/Counters] dialog box. For details on the [Consumables/Counters] dialog box, see "[Consumables/Counters] Menu," on p. 5-95.

# Replacing Toner Cartridges

Replace the toner cartridge with a new one using the following procedure.

**WARNING**

**Do not throw a used toner cartridge into open flames, as this may cause the toner remaining inside the cartridge to ignite, resulting in burns or a fire.**

**CAUTION**

**Take care not to allow the toner to come into contact with your hands or clothing, as this will dirty your hands or clothing. If they become dirty, wash them immediately with cold water. Washing with warm water will set the toner and make it impossible to remove the toner stains.**

IMPORTANT

- Dispose of the packing materials according to local regulations.
- Be sure to use only the toner cartridges designed for this printer.

NOTE

- For details on how to handle a toner cartridge, see "Precautions for Handling Toner Cartridges," on p. 6-13.
- The packing materials may be changed in form or position to be placed, or may be added or removed without notice.

## 1 Open the front cover.

Holding the opening of the front cover, open it gently.

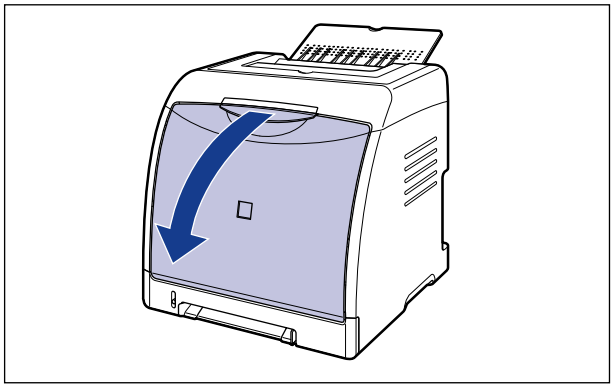

IMPORTANT

The toner cartridges are installed in order of black, yellow, cyan, and magenta from the top as shown in the figure.

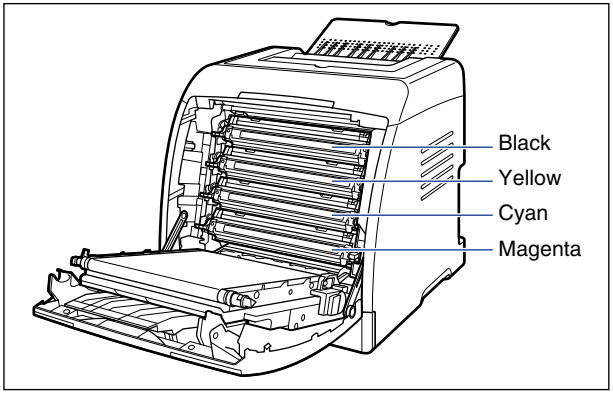


**2 Place paper (A4 size paper is recommended) on the transfer belt of the ETB unit (A) as shown in the figure so that the paper is not shifted.**

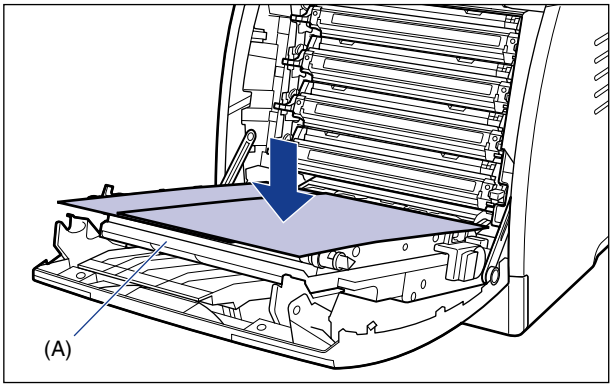


IMPORTANT

- When installing or removing the toner cartridges, be sure to place paper on the transfer belt of the ETB unit to protect the belt.

- Do not place any object on or touch the transfer belt (A) of the ETB unit. The transfer belt of the ETB unit is supplied with a function that cleans itself, therefore, do not clean the belt even when the toner is on it. If the ETB unit is broken or transfer belt is damaged, this may result in misfeeds or deterioration in print quality.

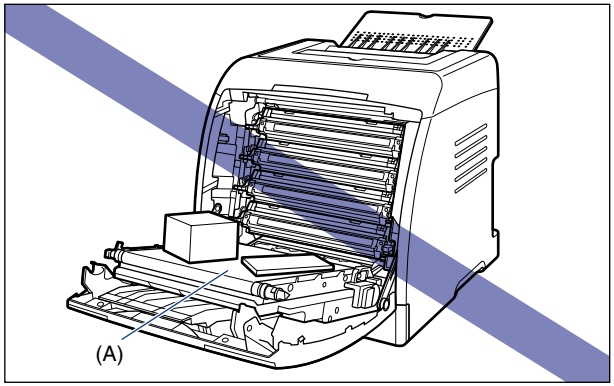


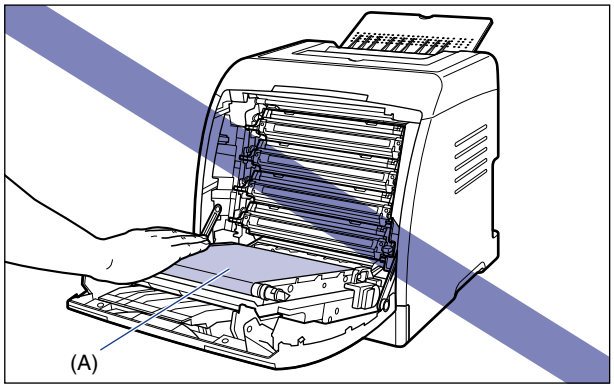

## 3 Holding the toner cartridge that you want to replace by the blue tabs on the both sides, pull it horizontally.

Holding the toner cartridge with your both hands firmly, pull it out so that you do not touch the transfer belt of the ETB unit.

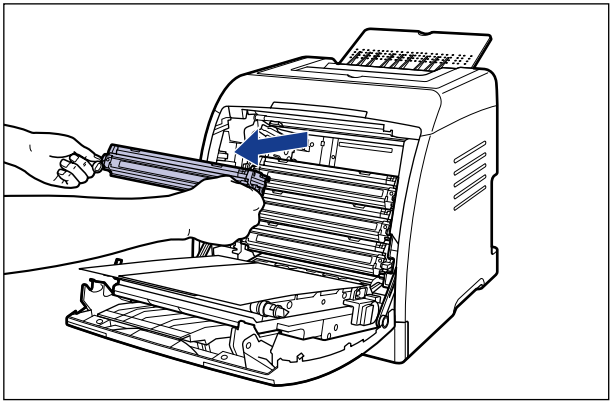

IMPORTANT

Do not touch the high-voltage contact (A) shown in the figure, as this may result in damage to the printer.

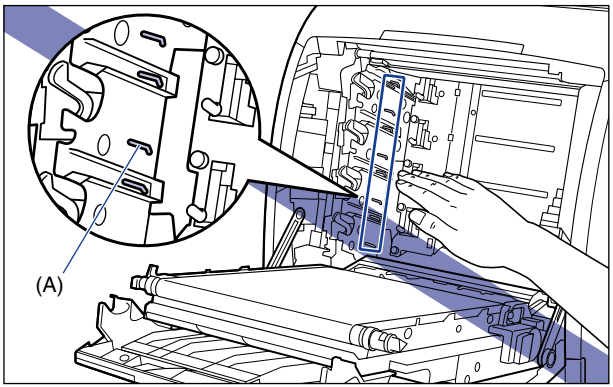

## 4 Take the new toner cartridge out of the protective bag after taking it out of the package.

There is a cut near the arrow on the protective bag, so you can open it by hand. However, if you cannot open it by hand, use scissors to open the protective bag so as not to damage the toner cartridge.

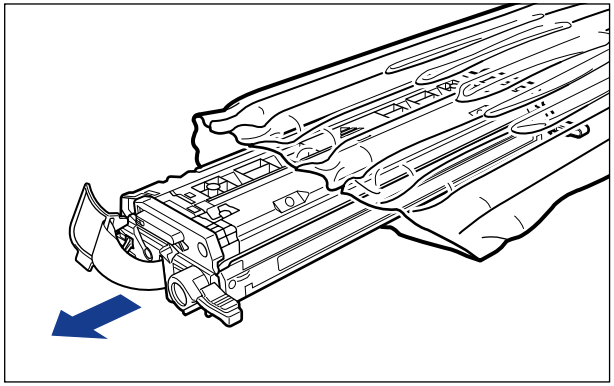

IMPORTANT

Keep the protective bag for the toner cartridge. It may be required after taking out the toner cartridge for printer maintenance.

## 5 Hold the toner cartridge as shown in the figure, shake it gently 5 or 6 times to evenly distribute the toner inside the cartridge.

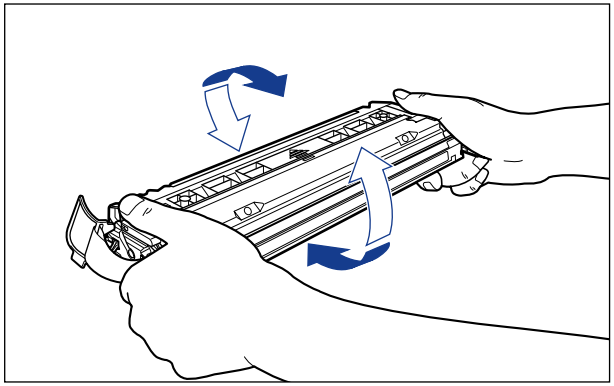

IMPORTANT

- If toner is not distributed evenly, this may result in deterioration in print quality. Be sure to carry out this procedure properly.

- Be sure to shake the toner cartridge gently. If you do not shake the cartridge gently, toner may spill out.

## 6 Place the toner cartridge on a flat surface, detach the tab of the sealing tape from the side of the toner cartridge ①, and then pull out the sealing tape (approx. 50 cm long) gently ② while supporting the toner cartridge.

Remove the sealing tape by hooking your fingers into the tab and pulling it out straight in the direction of the arrow.

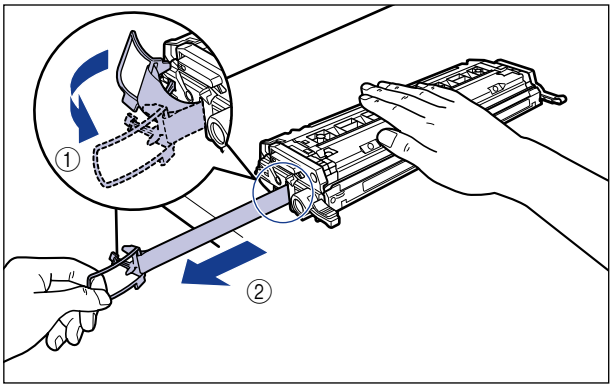


**CAUTION**

**If the sealing tape is pulled out forcefully or stopped at midpoint, toner may spill out. If the toner gets into your eyes or mouth, wash them immediately with cold water and immediately consult a physician.**

IMPORTANT

- Do not pull the sealing tape diagonally, upwards, or downwards. If the tape is severed, it may become difficult to pull out completely.

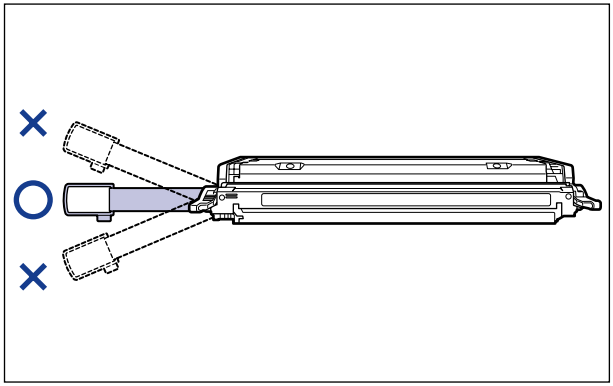

- Pull out the sealing tape completely from the toner cartridge. If any tape remains in the toner cartridge, this may result in poor print quality.
- When pulling out the sealing tape, be careful not to hold the drum protective shutter (A) with your hands.

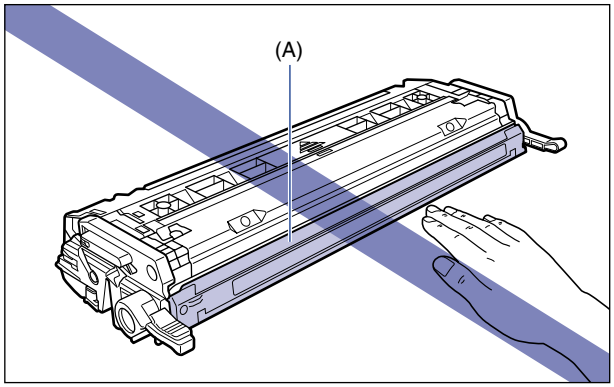


## 7 Hold the toner cartridge properly with the arrowed side facing up as shown in the figure.

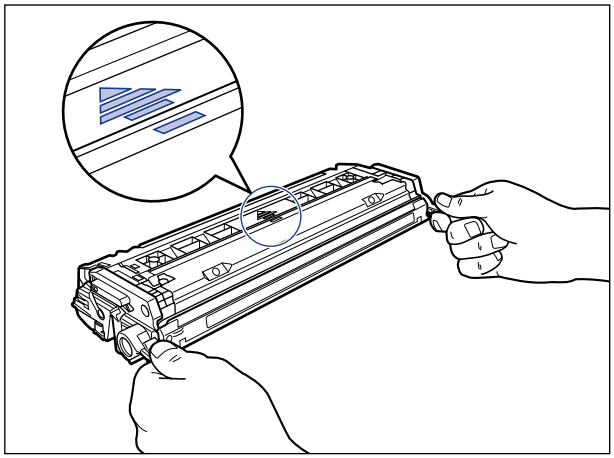

IMPORTANT

Do not hold the toner cartridge in a manner that is not directed in this procedure.

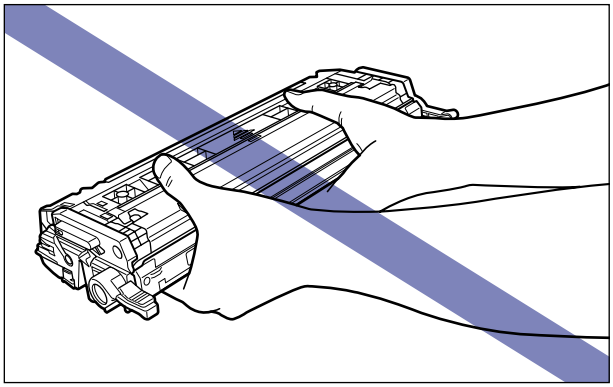

## 8 Hold the toner cartridge with both hands and install it into the printer.

Align (A) of the toner cartridge that you want to replace with the slots (B) to which the label of the same color is attached, then insert the cartridge until it stops.

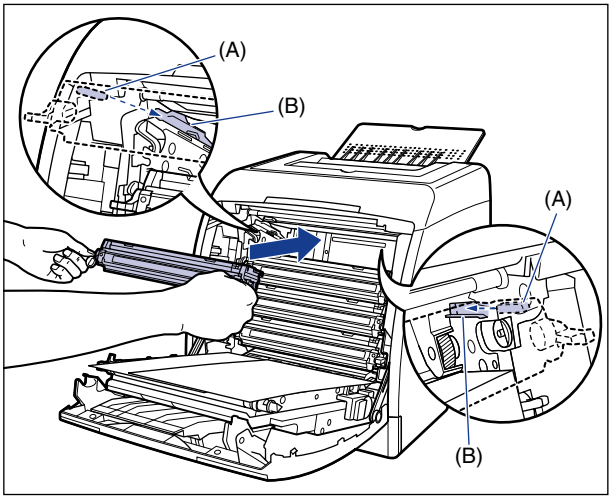


IMPORTANT

Be sure to install the toner cartridge by pushing it firmly. If the toner cartridges are not installed firmly, this may result in deterioration in print quality.

## 9 Remove the paper.

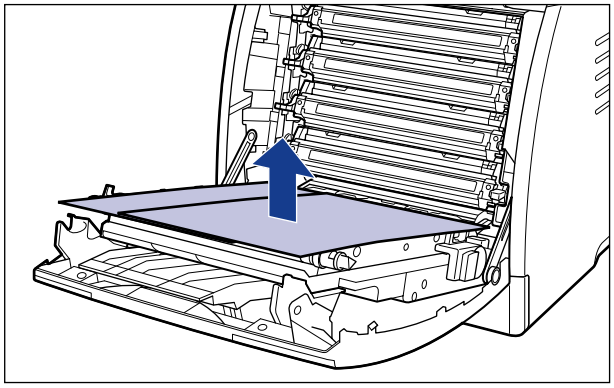

IMPORTANT

When removing the paper, be careful not to touch or damage the transfer belt of the ETB unit.

## 10 Close the front cover.

Holding the opening of the front cover, close it gently.

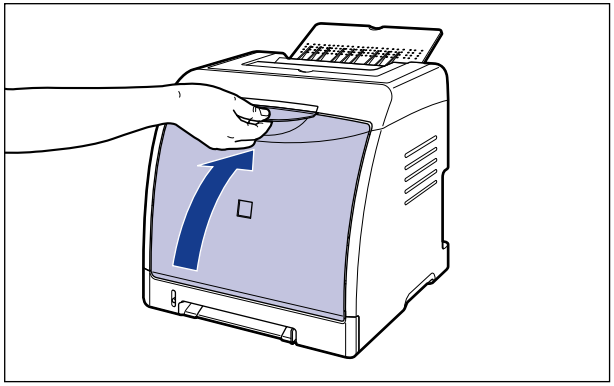

**CAUTION**

**When closing the front cover, be careful not to catch your fingers.**

IMPORTANT

- If you cannot close the front cover, check if the toner cartridge is installed properly. If you try to close the front cover forcefully, this may result in damage to the printer.
- Do not leave the front cover open for a long time after installing the toner cartridge.

# Precautions for Handling Toner Cartridges

A toner cartridge consists of light-sensitive components and intricate mechanical components. Handling the toner cartridge without due care may lead to damage to the toner cartridge or deterioration in print quality. Be careful of the following points when removing or installing the toner cartridge.

**WARNING**

**Do not throw a used toner cartridge into open flames, as this may cause the toner remaining inside the cartridge to ignite, resulting in burns or a fire.**

**CAUTION**

**Take care not to allow the toner to come into contact with your hands or clothing, as this will dirty your hands or clothing. If they become dirty, wash them immediately with cold water. Washing with warm water will set the toner and make it impossible to remove the toner stains.**

IMPORTANT

- When you take the toner cartridge out of the printer for servicing the printer, place the toner cartridge into the original protective bag, or wrap it with a thick cloth immediately.
- When replacing a toner cartridge, be sure to replace the toner cartridge of the same color.
- Do not expose the toner cartridge to direct sunlight or strong light.
- Print quality may deteriorate if you touch or damage the photosensitive drum inside the toner cartridge. Be sure not to touch or open the drum protective shutter (A). Also, be careful not to hold or touch areas that are not specified in this procedure, such as the electrical contact (B) or sensors (C). This may result in damage to the cartridge.

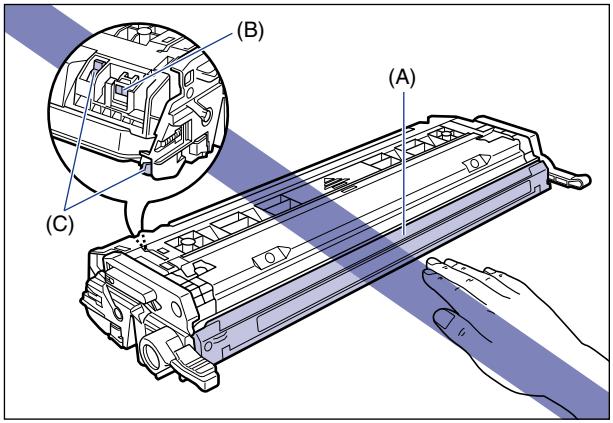

- Do not jolt the toner cartridge memory (D) or bring it near a magnetic field. This may result in damage to the cartridge.

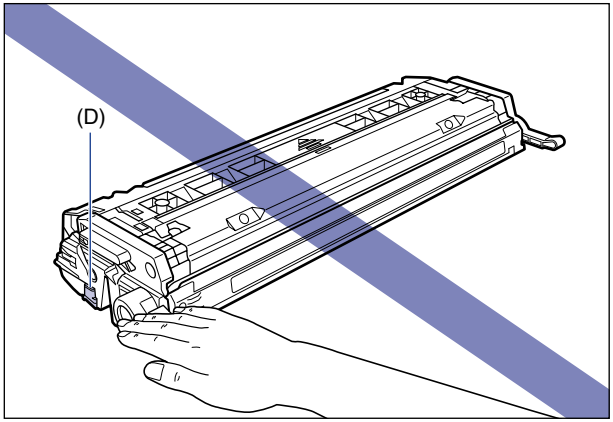


- When handling a toner cartridge, hold it properly as shown in the figure and handle it with the arrowed side facing up. Do not place it vertically or upside-down.

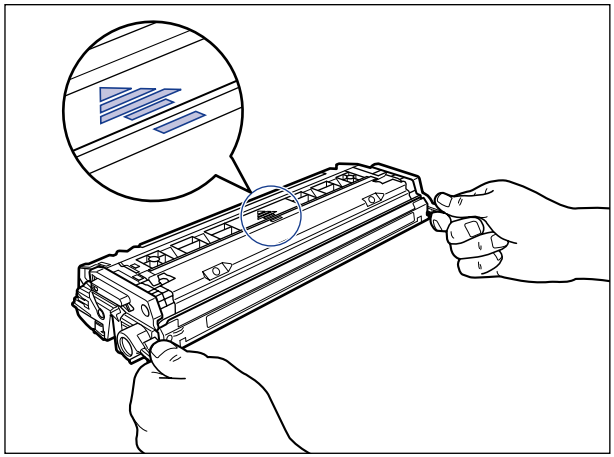

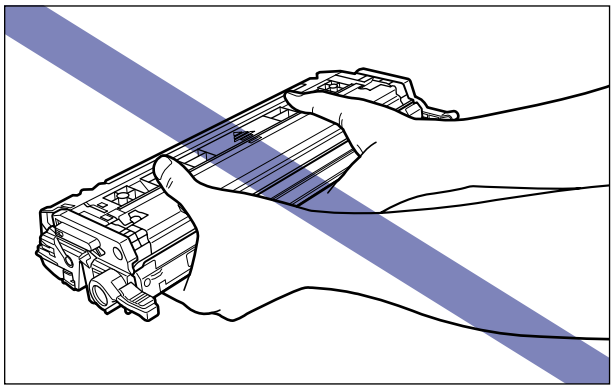

- Do not attempt to disassemble or modify the toner cartridge.
- Condensation may form in and on a toner cartridge if it is brought into an environment that exposes it to sudden changes in temperature and/or humidity. If you move the toner cartridge to a location that is warmer or has higher humidity, leave the cartridge in the new location for 2 hours or longer without opening the protective bag to allow it to adjust to the new temperature.
- Be sure to use new toner cartridges before the expiration date indicated on the package.
- Keep the toner cartridge away from products that generate magnetic waves, such as a display or computer.

## Storing Toner Cartridges

Be careful of the following points when storing a new toner cartridge or handling a toner cartridge that has been taken out of the printer for maintenance or moving the printer.

IMPORTANT

- Do not take a new toner cartridge out of the protective bag until it is ready to be used.
- When you take the toner cartridge out of the printer for servicing the printer or other purposes, place the toner cartridge into the original protective bag, or wrap it with a thick cloth immediately.
- Do not place it vertically or upside-down. Store the toner cartridge in the same orientation as when installed in the printer.
- Do not store the toner cartridge in a place exposed to direct sunlight.
- Do not store cartridges in a hot or humid place, or a place where the temperature and humidity can change significantly.
  Storing environment temperature: 0 to 35 °C (32 to 95 °F)
  Storing humidity range: 35 to 85 % RH (no condensation)
- Do not store the toner cartridge in a place where corrosive gases, such as ammonia, are generated, or where a considerable amount of salt is contained in the air, or where there is a lot of dust.
- Keep the toner cartridge out of the reach of small children.

### ■ Condensation

Even within the storable humidity range, water droplets may develop both inside and outside of the toner cartridge due to the difference in temperature. The development of water droplets is called condensation. Condensation will adversely affect the quality of the toner cartridge.

# Calibrating the Printer

Perform calibration when the colors have changed and the data is not printed in the correct colors (specified colors) or a phenomenon of "Out-of-Register Colors" occurs. You can perform calibration manually or automatically at the designated time everyday. Also, you can specify whether the printer performs calibration automatically when data is not sent from the computer or when the printer status remains as it is longer than the fixed period, or whether calibration should be prioritized immediately after the printer is turned ON or when calibration needs to be performed for some reason.

IMPORTANT

If you perform calibration frequently, this may affect the life of the toner cartridges.

NOTE

Calibration takes approximately 150 seconds.



## Performing Calibration Manually

Perform calibration manually using the following procedure.

### 1 Display the Printer Status Window.

For details on methods for displaying the Printer Status Window, see "Displaying the Printer Status Window," on p. 5-92.

## 2 From the [Options] menu in the Printer Status Window, select [Utility] → [Calibration].

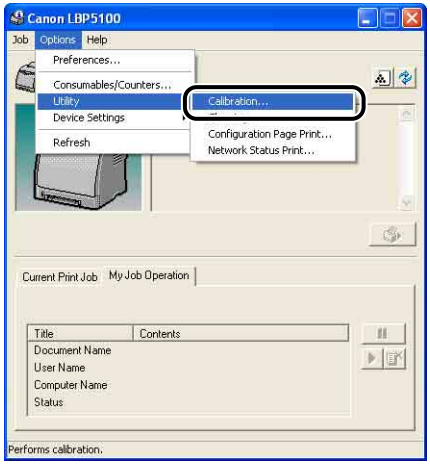


A confirmation message is displayed.

## 3 Click [OK].

# Performing Calibration Automatically at the Designated Time

Perform calibration automatically at the designated time using the following procedure.

IMPORTANT

When the printer is under any of the following status, calibration is not performed even if the specified time has come.

- During printing (Calibration is performed after the print job finishes. However, calibration is also performed when approximately 150 pages are printed.)
- Within 30 minutes after performing calibration last time (Calibration is performed when approximately 150 pages are printed.)

## 1 Display the Printer Status Window.

For details on methods for displaying the Printer Status Window, see "Displaying the Printer Status Window," on p. 5-92.

## 2 From the [Options] menu in the Printer Status Window, select [Device Settings] → [Calibration Settings].

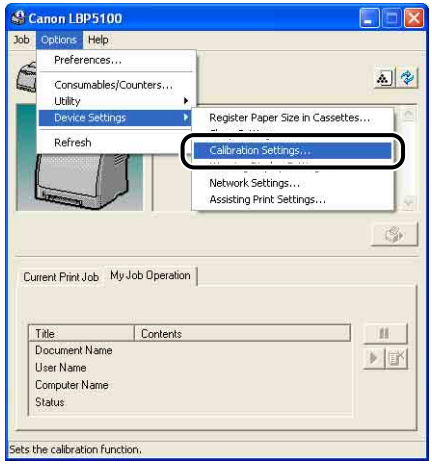


## 3 Select the [Use Periodical Calibration Timer] check box in the [Calibration Settings] dialog box, then specify the time to perform calibration in [Time].

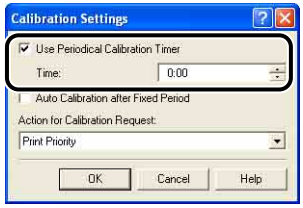

## 4 Click [OK].

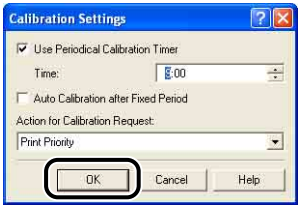


# Performing Calibration Automatically

If you want to specify the printer to perform calibration automatically when data is not sent from the computer or when the printer status remains as it is longer than the fixed period*, perform the following procedure.

* First, calibration is performed in an hour, and then another calibration is performed in four hours (calibration is not performed anymore afterward).

IMPORTANT

The printer does not perform automatic calibration while it is in the sleep state.

## 1 Display the Printer Status Window.

For details on methods for displaying the Printer Status Window, see "Displaying the Printer Status Window," on p. 5-92.

## 2 From the [Options] menu in the Printer Status Window, select [Device Settings] → [Calibration Settings].

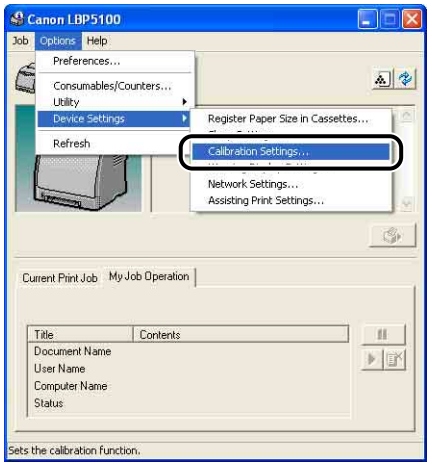

## 3 Select the [Auto Calibration after Fixed Period] check box in the [Calibration Settings] dialog box.

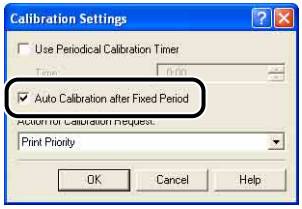


## 4 Click [OK].

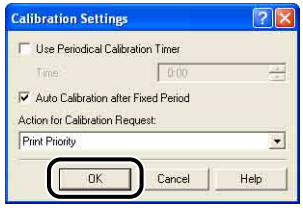




# Specifying Whether Calibration Should Be Prioritized

You can specify which operation, printing or calibration, should be prioritized when calibration is to be performed by the automatic calibration function etc.
Printing is to be prioritized by default.

IMPORTANT

- When any toner cartridge is replaced, calibration is prioritized even if [Print Priority] is selected.
- If calibration is performed for some reason by the completion of the printing, another calibration is not performed even with [Print Priority] selected after the completion of the printing.
- When the printer is under any of the following circumstances, calibration is not performed even if [Calibration Priority] is selected.
  - When the time specified in [Use Periodical Calibration Timer] in the [Calibration Settings] dialog box has come during printing (Calibration is performed after the print job finishes. However, calibration is performed when approximately 150 pages are printed.)
  - When the time specified in [Use Periodical Calibration Timer] has come within 30 minutes after performing calibration last time (However, calibration is performed when approximately 150 pages are printed.)

## 1 Display the Printer Status Window.

For details on methods for displaying the Printer Status Window, see "Displaying the Printer Status Window," on p. 5-92.

## 2 From the [Options] menu in the Printer Status Window, select [Device Settings] → [Calibration Settings].

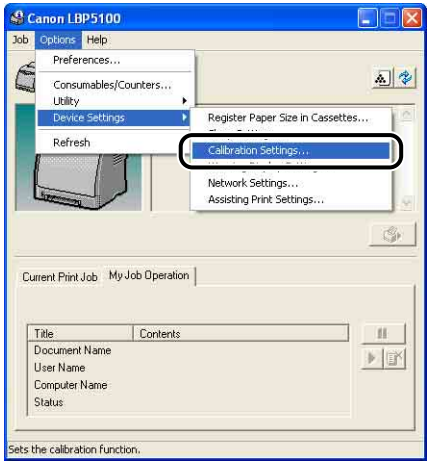


## 3 Select [Print Priority] or [Calibration Priority] from [Action for Calibration Request].

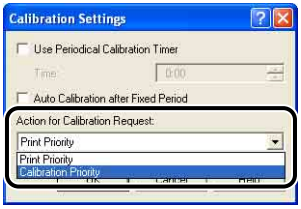


## 4 Click [OK].

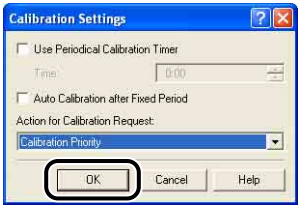

# Cleaning the Fixing Roller

When the front or back of the printed paper has smudge marks, clean the fixing roller using the following procedure. Print quality deterioration can be prevented by cleaning the fixing roller.

IMPORTANT

The cleaning page cannot be printed on any paper other than A4. Be sure to use A4 size paper.

NOTE

- When the printer is used as a shared printer, you cannot perform cleaning from a client computer.
- Cleaning takes approximately 80 seconds.

**1** **Load A4-size blank paper (plain paper) in the manual feed slot or paper cassette.**

**2** **Display the Printer Status Window.**

For details on methods for displaying the Printer Status Window, see "Displaying the Printer Status Window," on p. 5-92.

## 3 From the [Options] menu in the Printer Status Window, select [Utility] → [Cleaning].

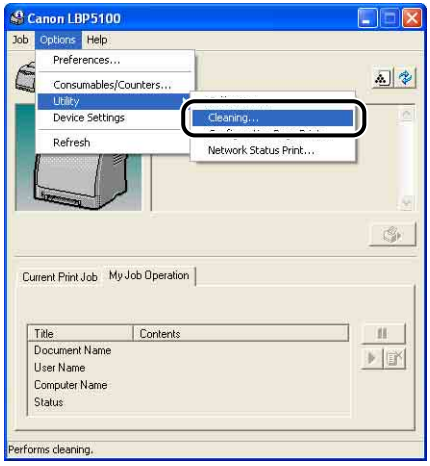


A confirmation message is displayed.

## 4 Click [OK].

The message <Cleaning> appears in the Printer Status Window, then the cleaning starts.
When the cleaning page is output, and the message is cleared, the cleaning is completed.

IMPORTANT

Do not touch the cleaning page until it is output to the output tray completely. The cleaning page is first output partially after the front side is printed, and then it is fed again to be printed on the reverse side.

NOTE

The cleaning process cannot be canceled. Please wait until it is completed.

# Cleaning the Static Charge Eliminator

When the print quality has deteriorated compared to when you just purchased the printer, there is a possibility that the static charge eliminator is dirty. Clean the static charge eliminator using the following procedure.

IMPORTANT

When the [Reduce Vertical Streaks on Outputs] check box in the [Assisting Print Settings] dialog box in the Printer Status Window is selected, the printer prints without using the static charge eliminator. Therefore, cleaning the static charge eliminator has no effect on the deterioration.

## 1 Open the front cover.

Holding the opening of the front cover, open it gently.

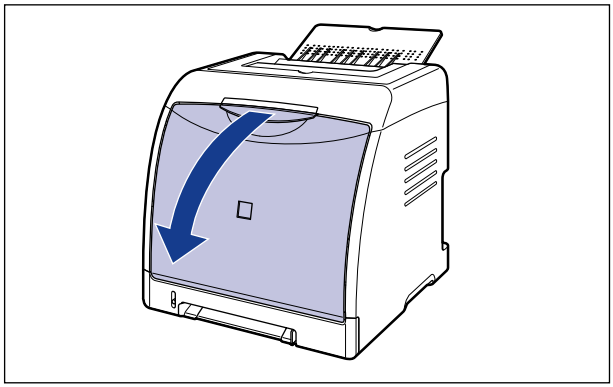

## 2 Supporting the blue static charge eliminator cleaner (A) with your finger as shown in the figure, slide it from side to side a couple of times.

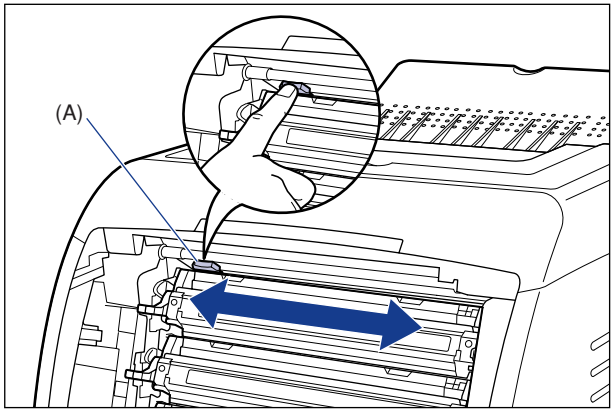


IMPORTANT

Move the static charge eliminator cleaner back to its original position (left edge) after the cleaning finishes. If you do not move back the static charge eliminator cleaner to the proper position, some of the printed image may be missing in the shape of a band.

## 3 Close the front cover.

Holding the opening of the front cover, close it gently.

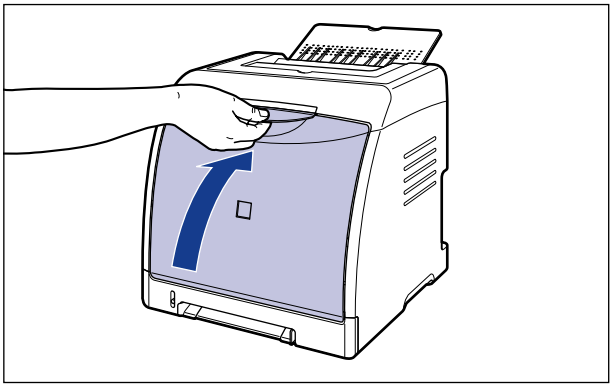

**CAUTION**

**When closing the front cover, be careful not to catch your fingers.**

# Cleaning the Outside of the Printer

Periodically clean the outer surfaces and ventilation slots of the printer to maintain the optimal printing quality. When cleaning the printer, be careful of the following points in order to prevent an electrical shock or printer malfunctions.

**WARNING**

- **When cleaning the printer, turn OFF the main power switch, and then unplug the power plug. Failure to observe these steps may result in a fire or electrical shock.**
- **Do not use alcohol, benzene, paint thinner, or other flammable substances. If flammable substances come into contact with electrical parts inside the printer, it may result in a fire or electrical shock.**

IMPORTANT

- Be careful not to use a cleaning agent other than water or a mild detergent diluted with water, as this may deform or crack the plastic materials in the printer.
- When using a mild detergent, be sure to dilute it with water.
- Grease or oil does not have to be applied to this printer. Be sure not to apply grease or oil.

## 1 Perform the following procedure.

Turn the printer OFF ①.
If a USB cable is connected, turn the computer off ②, and then disconnect the USB cable ③.
Disconnect the power plug from the AC power outlet ④.

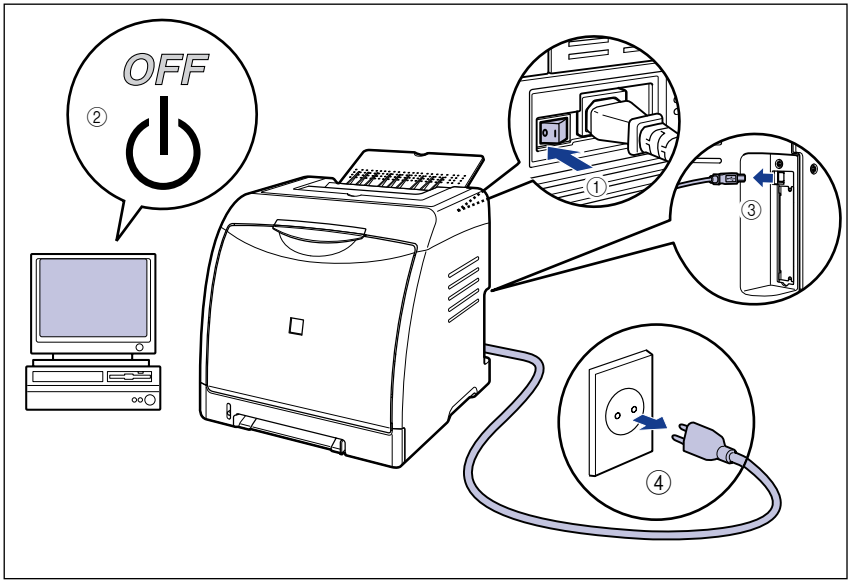


## 2 Firmly wring a soft cloth dampened with water or a mild detergent diluted with water, and wipe off the dirt.

If you use a mild detergent for cleaning, be sure to wipe away the detergent with a soft cloth dampened with water.

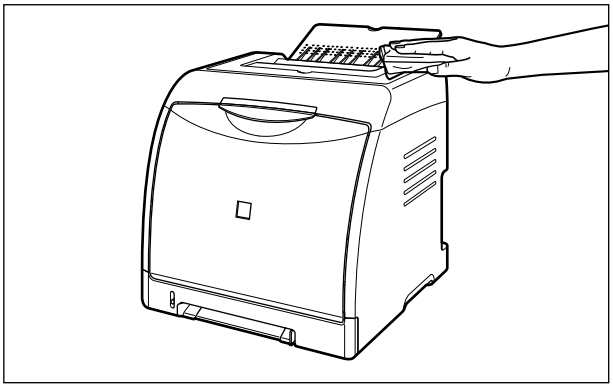

**3** **After wiping off the dirt, wipe the printer with a dry cloth.**

**4** **When the printer is completely dry, plug the power plug into the AC power outlet, and then connect the USB cable.**

# Moving the Printer

When changing the location of the printer or moving the printer for maintenance, be sure to perform the following procedure.

**CAUTION**

**Do not carry the printer with the paper cassette attached. If you do so, the paper cassette may drop resulting in personal injury.**

IMPORTANT

Make sure that the front cover and output tray are closed before carrying the printer.

NOTE

For details on the installation site, see "Installation Site," on p. 2-3.

## 1 Perform the following procedure.

Turn the printer OFF ①.
If a USB cable is connected, turn the computer off ②, and then disconnect the USB cable ③.
Disconnect the power plug from the AC power outlet ④.

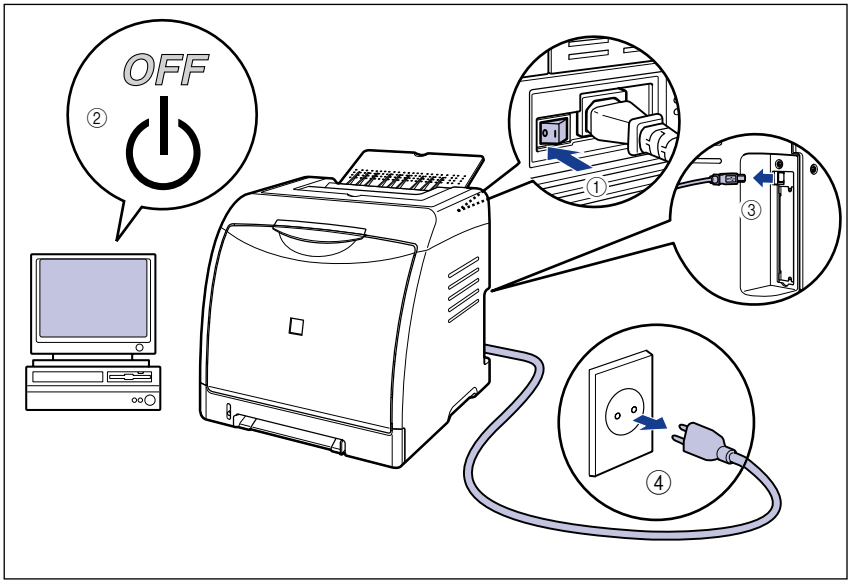

**WARNING**

**Be sure to turn the printer and computer OFF, unplug the power plug, and then disconnect all the interface cables from the printer before moving the printer. Otherwise, the power cord or interface cables may be damaged, resulting in a fire or electrical shock.**

## 2 Remove all the interface cables and the power cord from the printer.

## 3 Close the output tray.

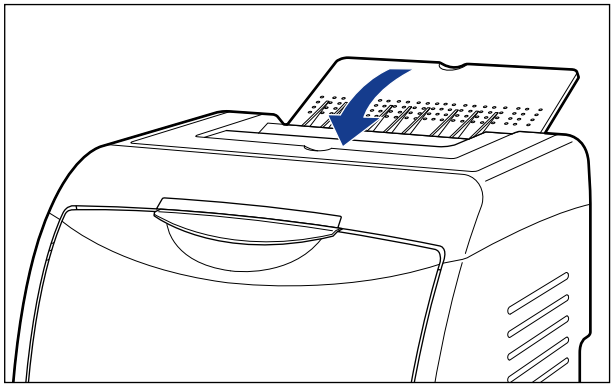

## 4 Pull out the paper cassette.

Pull out the paper cassette gently ①.

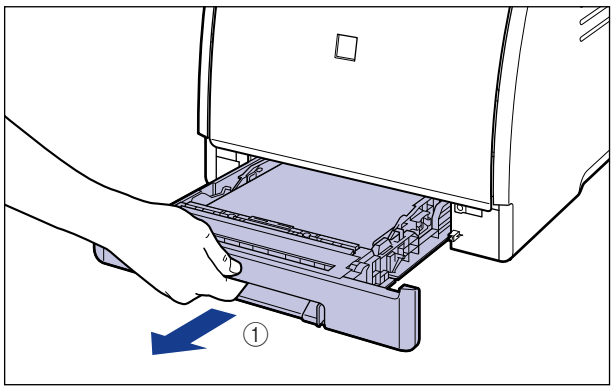

While holding the paper cassette with both hands, remove it from the printer unit as shown in the figure ②.

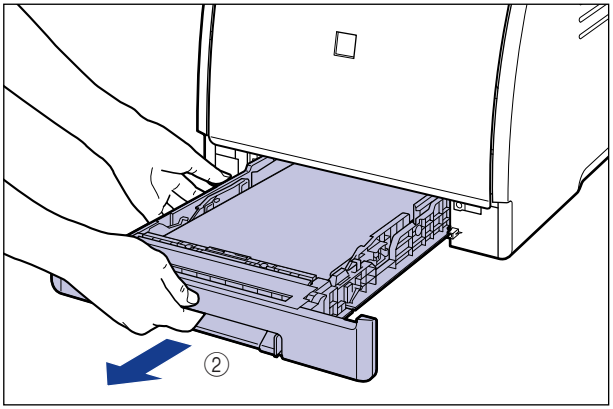


## 5 Remove the cassette protective cover.

Pressing the right side of the cassette protective cover ①, remove it ②.

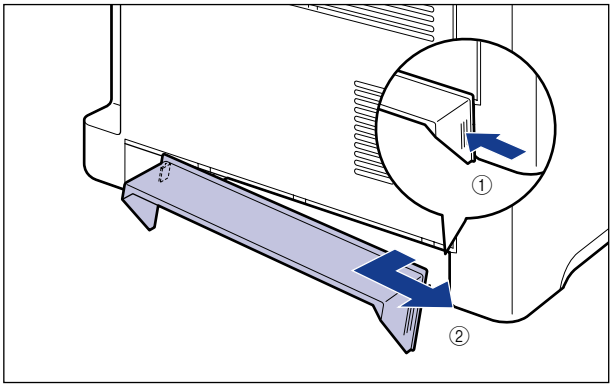

## 6 Move the printer unit from the installation site.

Carry the printer with 2 or more people by holding the center of the lift handles on the lower portion of the printer and lifting it up at the same time.

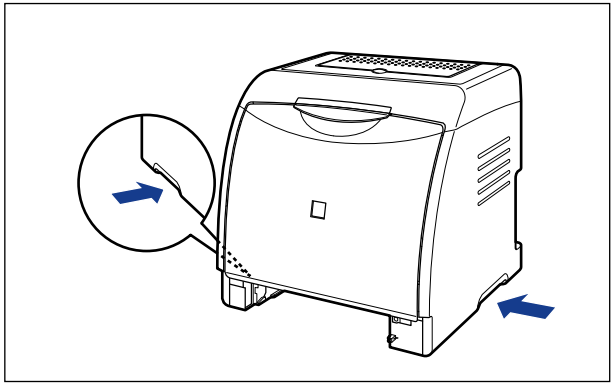

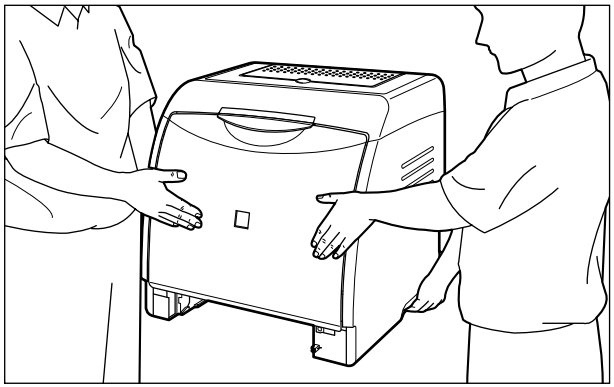

**CAUTION**

- **The printer weighs approximately 19.1 kg without the paper cassette and cassette protective cover installed. The printer must be carried by 2 or more people, and care must be taken to avoid hurting your back or other portions of your body when carrying the printer.**

- **Be sure not to hold the printer by the front panel, delivery slots, or any portions other than the lift handles. If you do so, you may drop the printer, resulting in personal injury.**

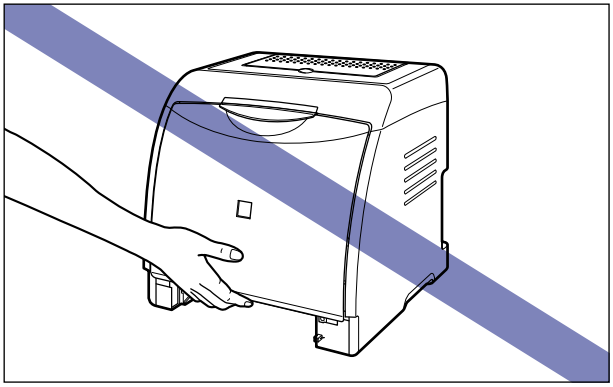

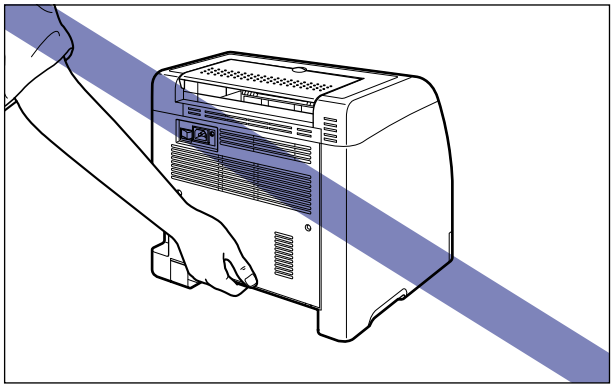

- **The front portion of the printer (A) is relatively heavy. Be careful not to get off-balanced when lifting the printer. If you do so, you may drop the printer, resulting in personal injury.**

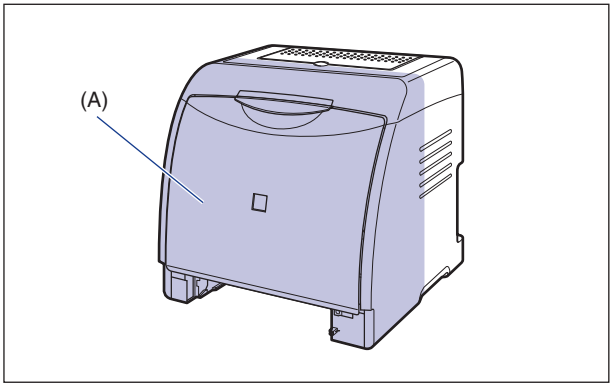

- **Do not carry the printer with the paper feeder installed. If you do so, the paper feeder may drop resulting in personal injury.**

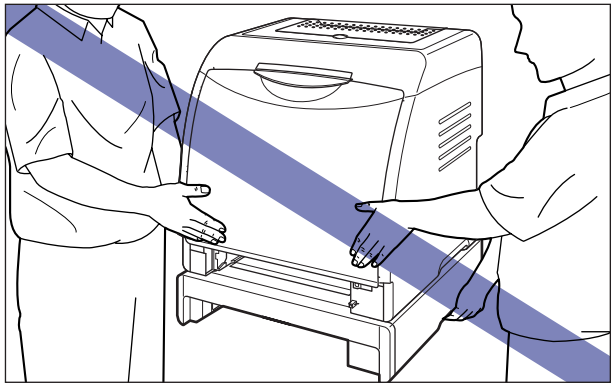

NOTE

If the optional paper feeder was previously installed in the printer, place the paper feeder on the new installation site before carrying the printer to the site. For details on the procedure for installing the paper feeder, see "Removing the Packing Materials and Installing the Paper Feeder," on p. 8-8.

## 7 Put the printer down carefully at the new installation site.

**CAUTION**

**Put the printer down slowly and carefully. Be careful not to hurt your hands.**

IMPORTANT

Secure sufficient space around the printer at the installation site so that you can install the optional accessories and connect cables.

## 8 Install the cassette protective cover.

Install the left side of the cassette protective cover ① on the printer, then while pressing the right side of the cover ②, insert the cover into the back of the printer ③ as shown in the figure.

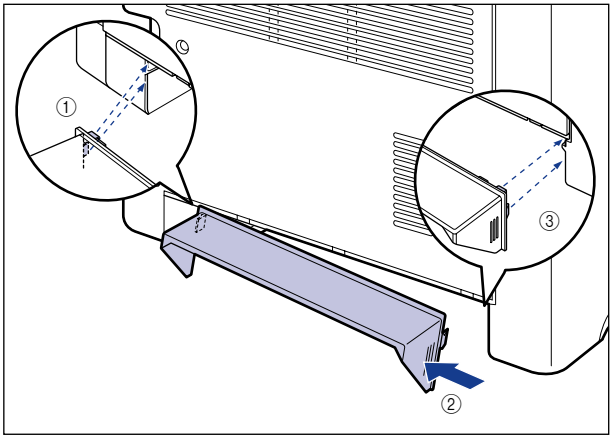

## 9 Set the paper cassette in the printer.

Push the paper cassette into the printer firmly until the front side of the paper cassette is flush with the front surface of the printer.

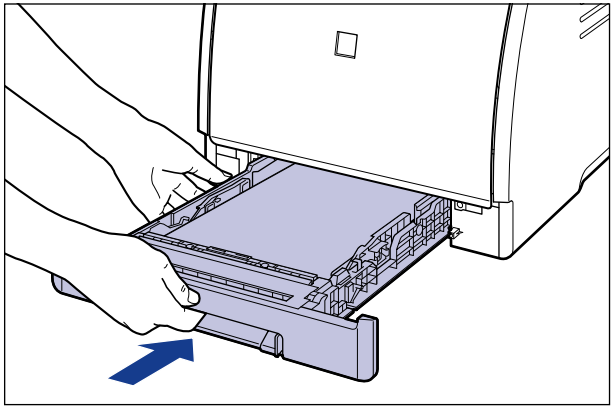

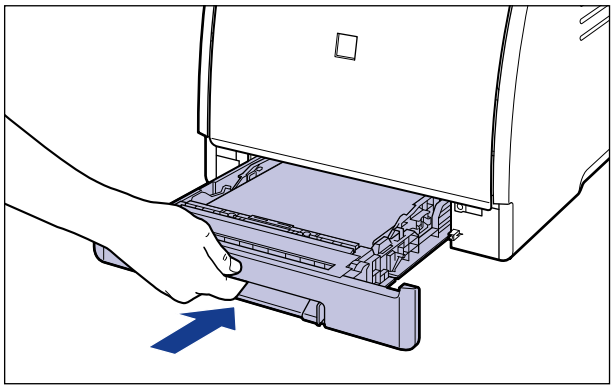

**CAUTION**

**When setting the paper cassette in the printer, be careful not to catch your fingers.**

## 10 Open the output tray.

## 11 Connect the interface cables except for the USB cable, and connect the power cord.

## 12 Plug the power plug into the AC power outlet.

## 13 Connect the USB cable.

> **● Transporting the Printer**
>
> When transporting the printer for reasons such as relocating, remove the toner cartridges and store the printer and the parts in the package that they came in with the packing materials attached in order to prevent them from being damaged while being transported.
> If the original package and packing materials are not available, find an appropriate box and packing materials and pack the printer and the parts appropriately.

# Handling the Printer

This printer consists of various electronic and precise optical parts. Read the following section so that you can handle the printer properly.

IMPORTANT

- For details on how to handle the printer, also read "Important Safety Instructions" (See p. xviii).
- Do not place any heavy objects on the printer, trays, or covers. This may result in damage to the printer.

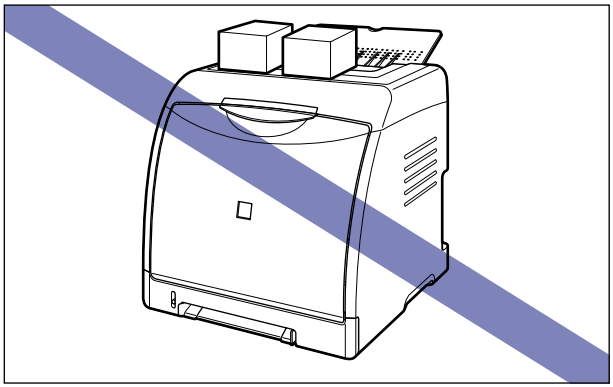

- Do not leave each cover open longer than required. Exposing the printer to direct sunlight or strong light may result in deterioration in print quality.
- Avoid vibration while the printer is printing. This may result in deterioration in print quality.

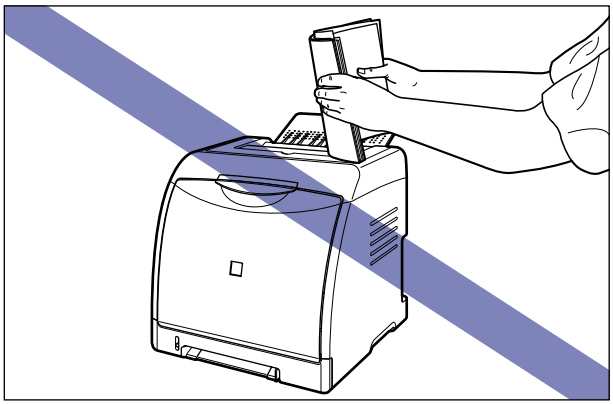

- Be sure not to open the covers on the printer during printing. This may result in damage to the printer.

- Handle each cover and the output tray gently when opening or closing them. Failure to do so may result in damage to the printer.
- If you want to spread a blanket on the printer to prevent dust from entering the printer, turn the power OFF and allow the printer to cool down sufficiently before covering the printer.
- If you do not plan to use the printer for a long period of time, unplug the power plug from the AC power outlet.
- Do not use or store the printer in a room where chemicals are used.

# Troubleshooting

7

CHAPTER

This chapter describes the remedies for problems such as a paper jam or poor print quality.


Troubleshooting Map . . . . . 7-2

Paper Jams . . . . . 7-3

Paper Jam Area . . . . . 7-6

Procedure for Clearing Paper Jams . . . . . 7-7

The Alarm Indicator is On/Blinking . . . . . 7-20

The Alarm Indicator is On (a Service Error Appears) . . . . . 7-21

The Alarm Indicator is Blinking . . . . . 7-24

Print Quality Problems . . . . . 7-25

Paper Problems . . . . . 7-37

Installation Problems . . . . . 7-39

Problems on Local Installation . . . . . 7-40

Installation Problems When the Printer is Shared on a Network . . . . . 7-41

Printing a Test Page . . . . . 7-42

When Uninstallation Fails . . . . . 7-43

Uninstalling the USB Class Driver . . . . . 7-46

When Data is Not Sent to the Printer . . . . . 7-50

When the Printer and Computer are Connected by a USB Cable . . . . . 7-50

When the Printer is Shared on a Network . . . . . 7-52

Miscellaneous Problems . . . . . 7-54

Confirming the Printer Features . . . . . 7-56

# Troubleshooting Map

If any problem occurs while you are using the printer, follow the flow chart shown below to check the problem.

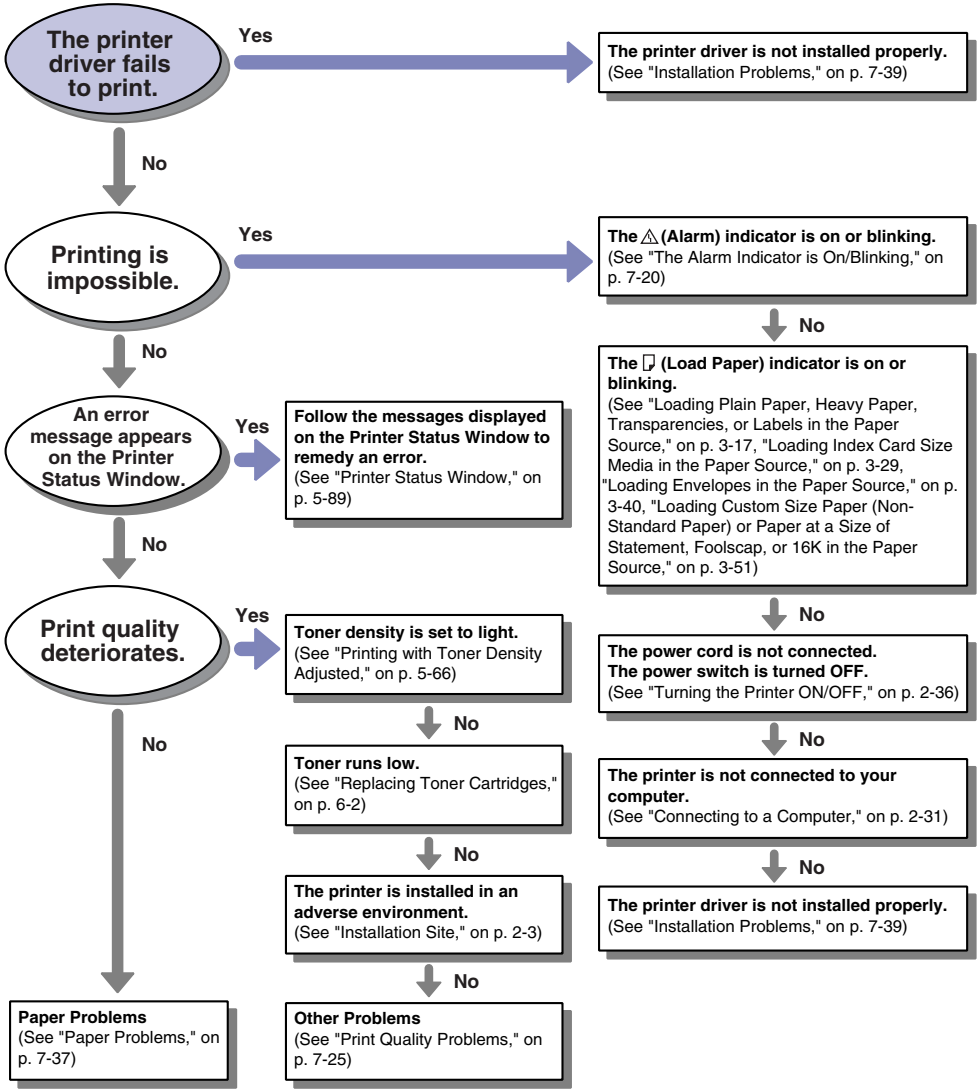

# Paper Jams

When a paper jam occurs during printing, the (Paper Jam) indicator (orange) blinks, and the following messages appear in the Printer Status Window.

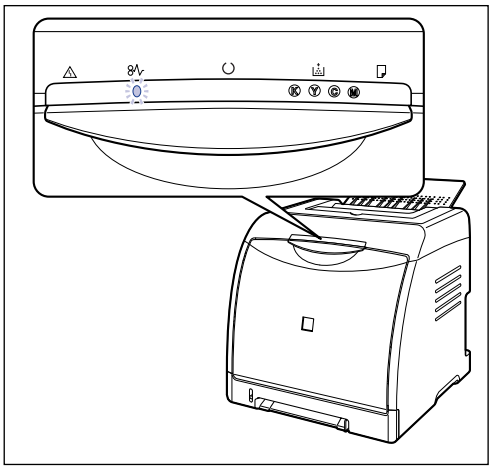

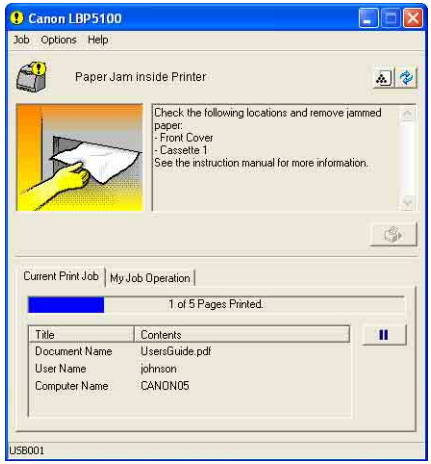


**WARNING**

**There are some areas inside the printer which are subject to high-voltages. When removing jammed paper or when inspecting the inside of the printer, do not allow necklaces, bracelets, or other metal objects to touch the inside of the printer, as this may result in burns or electrical shock.**

## CAUTION

- **The fixing unit and its surroundings inside the printer are hot during use. Make sure the fixing unit is completely cool before removing the jammed paper. Touching the fixing unit when it is still hot may result in burns.**

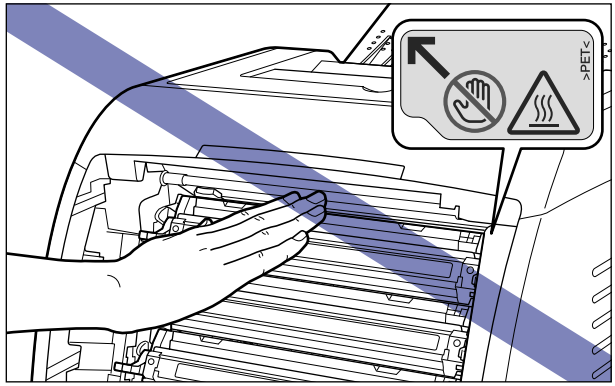


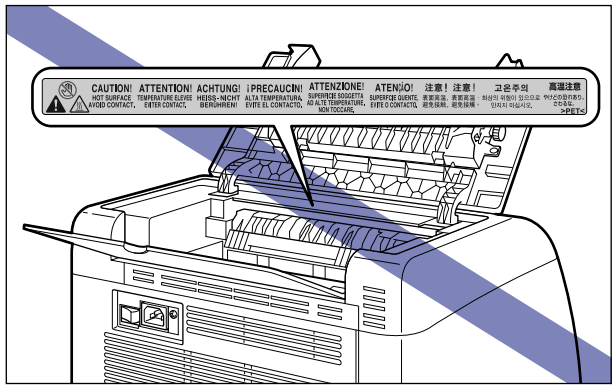


- **When removing jammed paper, take care not to allow the toner to come into contact with your hands or clothing, as this will dirty your hands or clothing. If they become dirty, wash them immediately with cold water. Washing with warm water will set the toner and make it impossible to remove the toner stains.**
- **When removing paper jammed inside the printer, remove the jammed paper gently to prevent the toner on the paper from scattering and getting into your eyes or mouth. If the toner gets into your eyes or mouth, wash them immediately with cold water and immediately consult a physician.**
- **When removing jammed paper, take care not to cut your hands with the edges of the paper.**
- **Keep your hands or clothing away from the roller in the output area after removing jammed paper completely. Even if the printer is not printing, sudden rotation of the roller may catch your hands or clothing, resulting in personal injury.**

IMPORTANT

- Remove jammed paper while the power of the printer is ON. If the power is turned OFF, the data being printed will be deleted.
- Applying excess force may result in tearing paper or damaging the parts in the printer. When removing jammed paper, pull out the paper in the most appropriate direction, judging from the position of the paper.
- If paper is torn, be sure to find and remove any remaining pieces of paper.
- Do not place any object on or touch the transfer belt (A) of the ETB unit. The transfer belt of the ETB unit is supplied with a function that cleans itself, therefore, do not clean the belt even when the toner is on it. If the ETB unit is broken or transfer belt is damaged, this may result in misfeeds or deterioration in print quality.

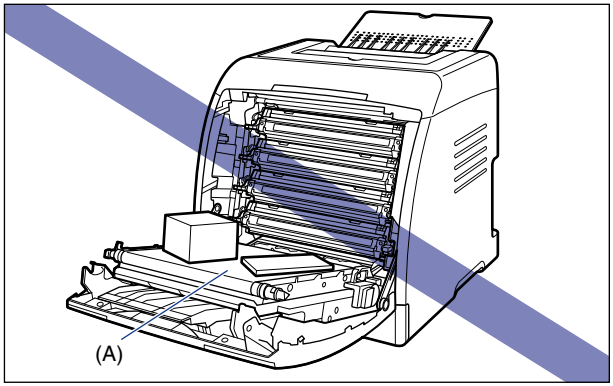


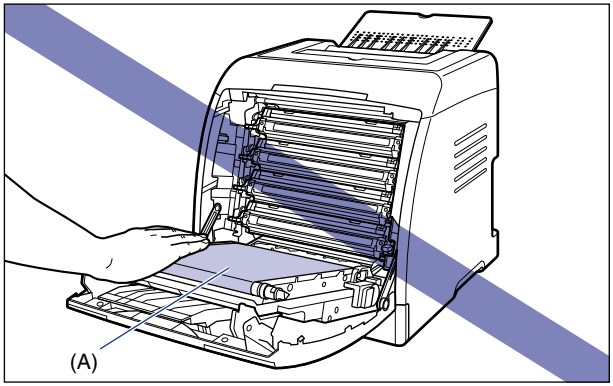

# Paper Jam Area

The messages displayed in the Printer Status Window indicate where the paper is jammed, and there are the following kinds.

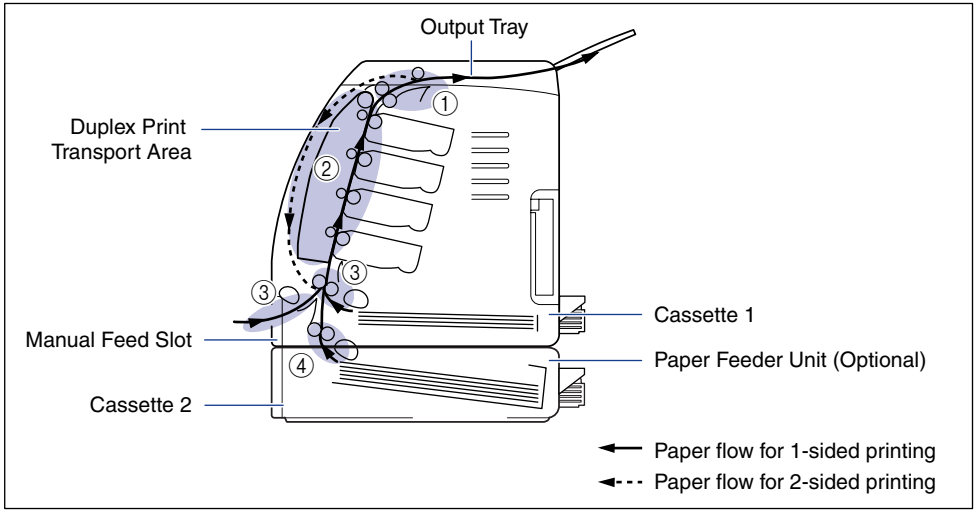


| | Paper Jam Area | Message |
|---|---|---|
| ① | Inside the top cover, Output tray | <Top Cover> |
| ② | Inside the front cover, Duplex print transport area | <Front Cover> |
| ③ | Manual feed slot, Cassette 1 | <Cassette 1> |
| ④ | Cassette 2 (only when the paper feeder is installed) | <Cassette 2> |

# Procedure for Clearing Paper Jams

Follow the instructions below to remove the jammed paper:

IMPORTANT

The error message may remain if jammed paper is removed without opening the front cover or top cover. In this case, open and close the front cover or top cover once.

## 1 Open the front cover.

Holding the opening of the front cover, open it gently.

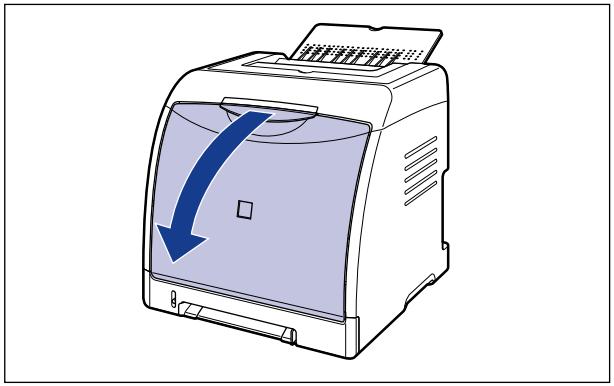

## 2 Remove any jammed paper by pulling it in the direction of the arrow.

Remove the jammed paper in the direction of the arrow gently to prevent unfixed toner from spilling. Remove the paper, being careful not to touch the transfer belt of the ETB unit or toner cartridge.

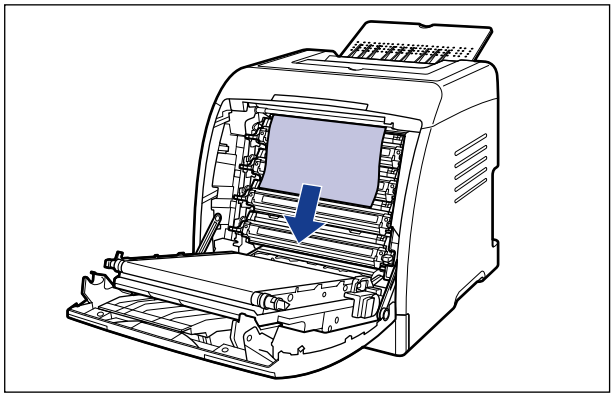

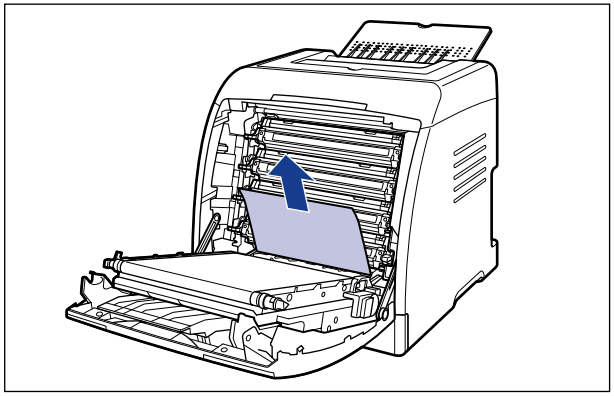

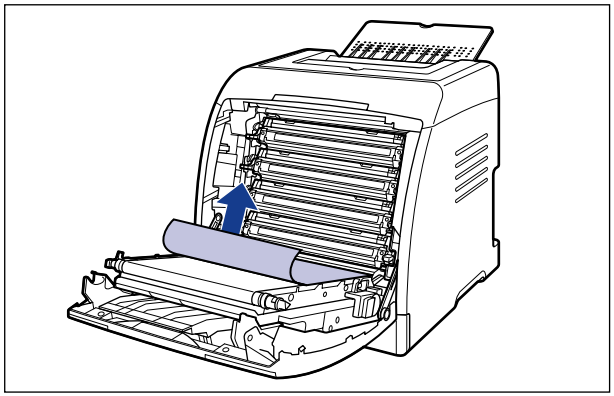

IMPORTANT

If the jammed paper cannot be removed easily, do not try to remove it forcefully but proceed to the next step.

## 3 If a paper jam occurs when performing 2-sided printing, perform the following procedure.

If you are not performing 2-sided printing, proceed to the next step.

❑ While holding the handle of the duplex unit ①, raise the duplex unit to the position shown in the figure ②.

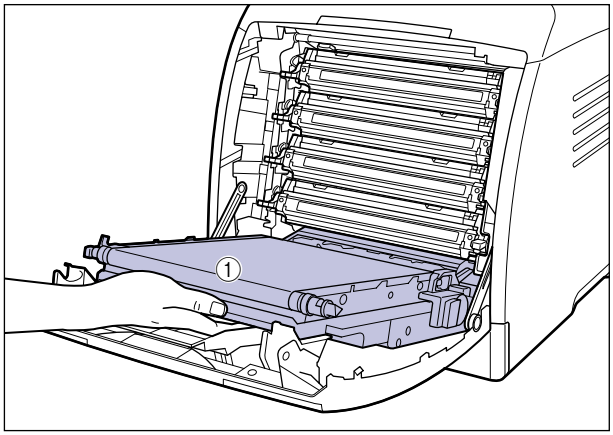


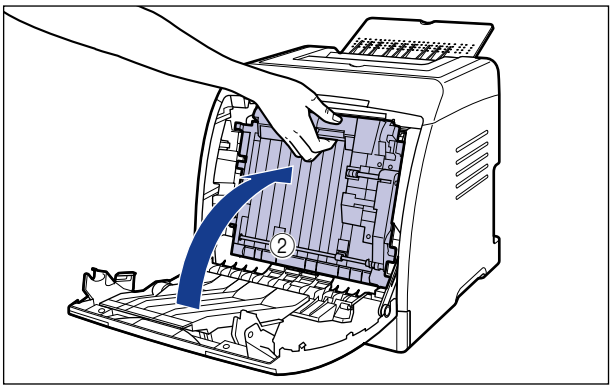

❑ Pull the rear edge of the jammed paper ①, then pull out the paper in the direction of the arrow to remove the paper ② as shown in the figure.

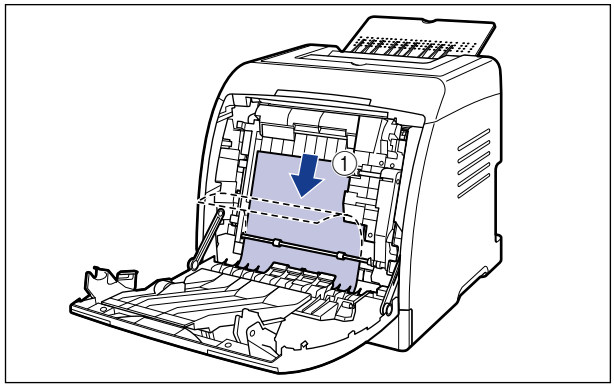


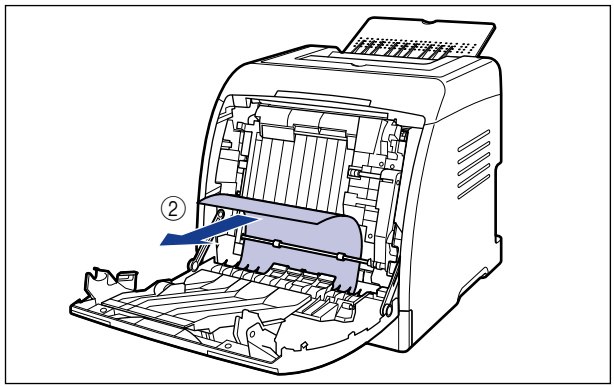

**4** **Holding the top cover by the hooks (A) on the both side ①, open the top cover ②.**

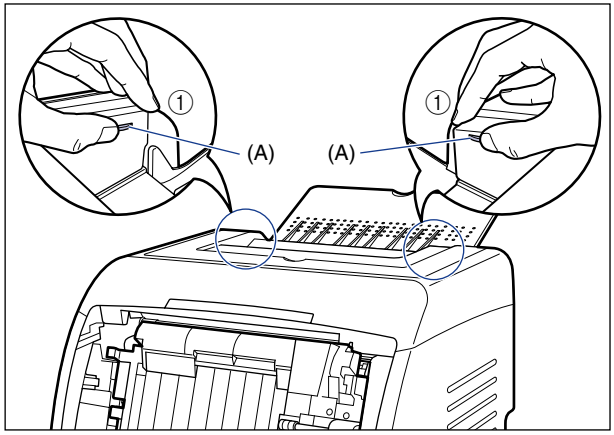


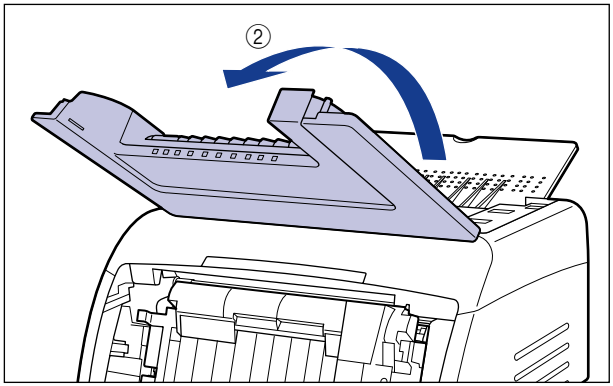

**5** **When the paper is caught in the top cover, pull out the top edge of the paper ①, and then remove the paper ② as shown in the figure.**

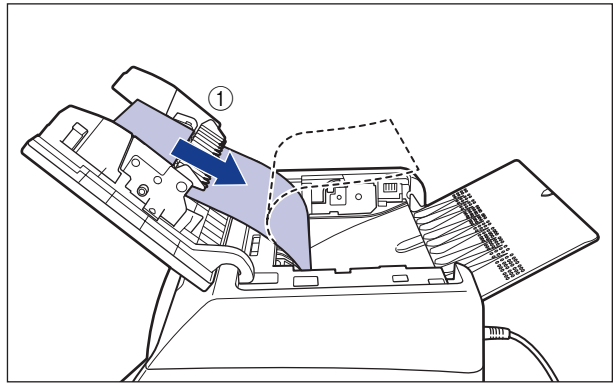


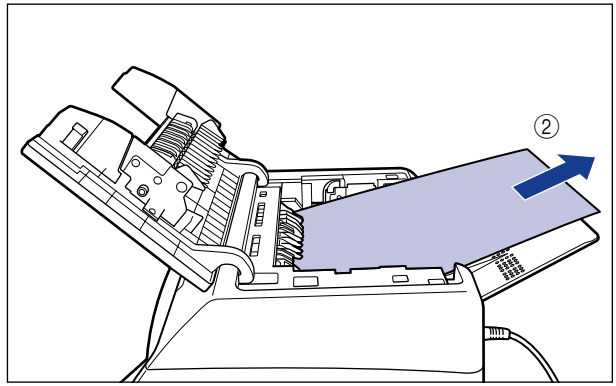

## 6 Close the front cover.

Holding the opening of the front cover, close it gently.

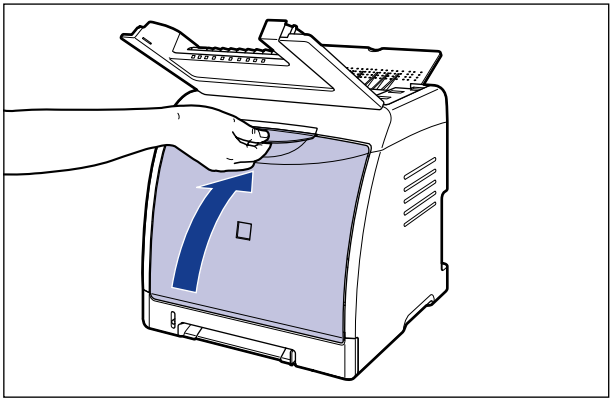

**CAUTION**

**When closing the front cover, be careful not to catch your fingers.**

## 7 Perform the following procedure with the top cover open. Be careful so that the top cover does not close.

## 8 If you are using the manual feed slot, remove any paper jammed in the manual feed slot.

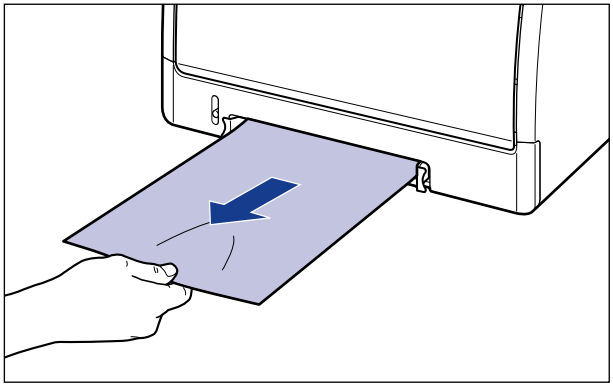

## 9 Pull out the paper cassette.

Pull out the paper cassette gently ①.

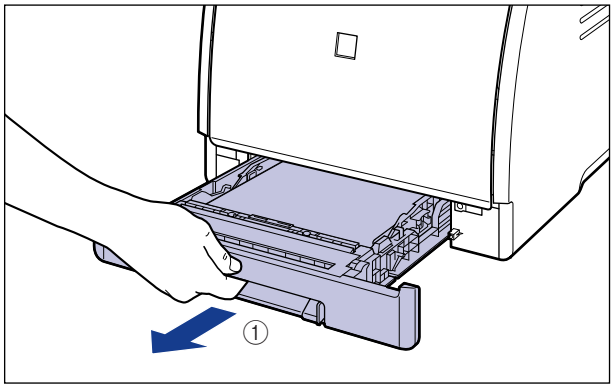


While holding the paper cassette with both hands, remove it from the printer unit as shown in the figure ②.

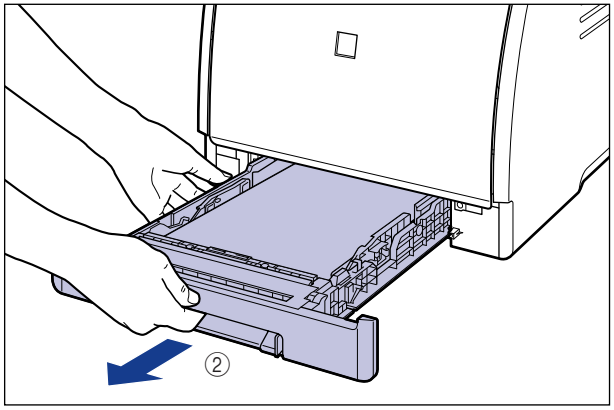

## 10 If the optional paper feeder is installed, pull out the paper cassette of the paper feeder.

Pull out the paper cassette gently ①.

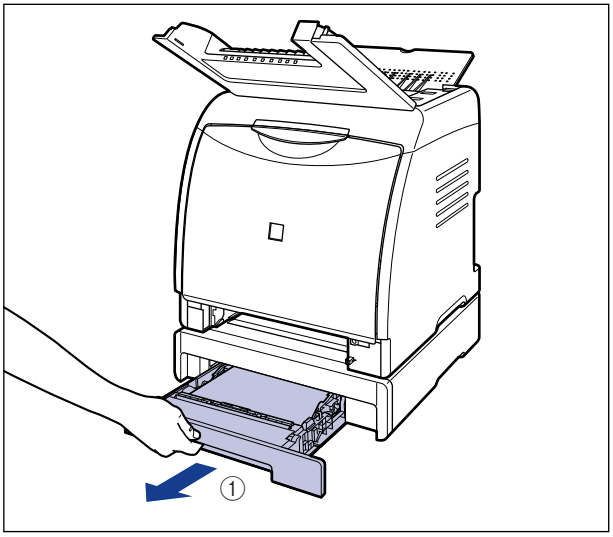


While holding the paper cassette with both hands, remove it from the paper feeder as shown in the figure ②.

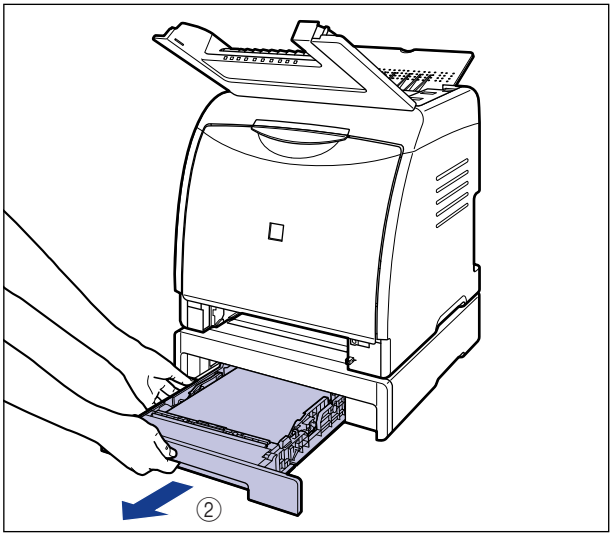

## 11 Remove any jammed paper while pushing it downward to some extent.

In case of the printer unit

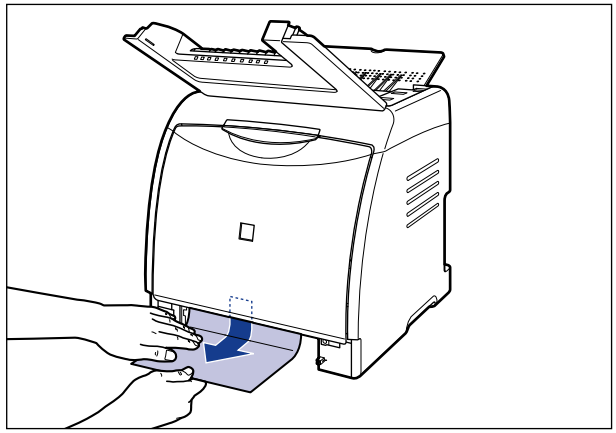

In case of the paper feeder

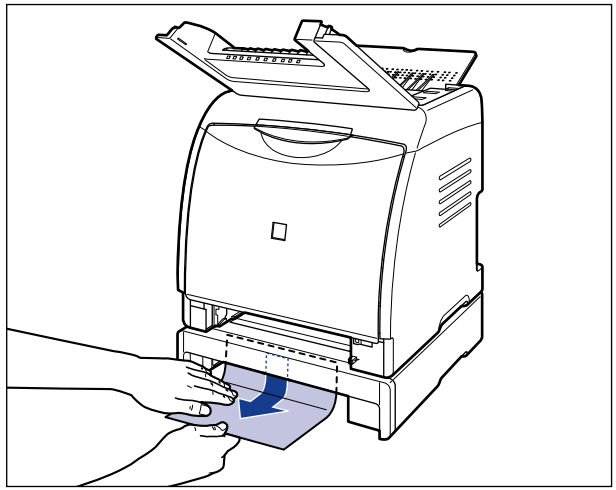

IMPORTANT

Do not touch the feed rollers (A) in the printer unit and paper feeder. This may result in damage to the printer or printer error.

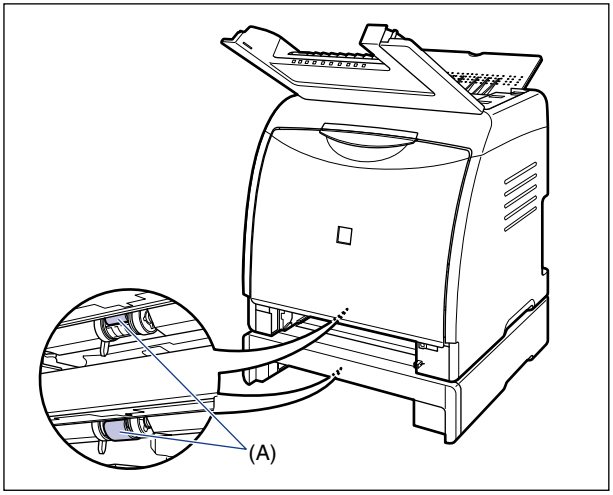

## 12 Set the paper cassette in the printer.

Push the paper cassette into the printer firmly until the front side of the paper cassette is flush with the front surface of the printer.

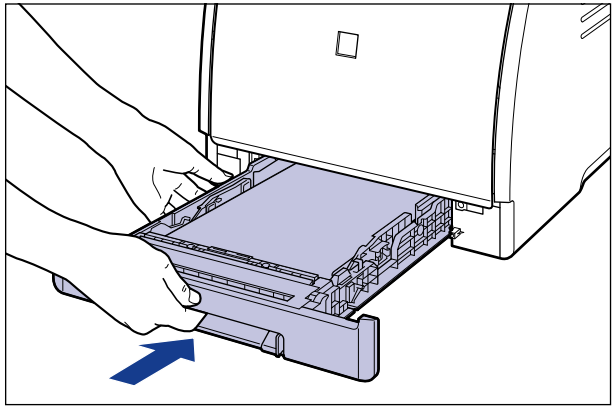

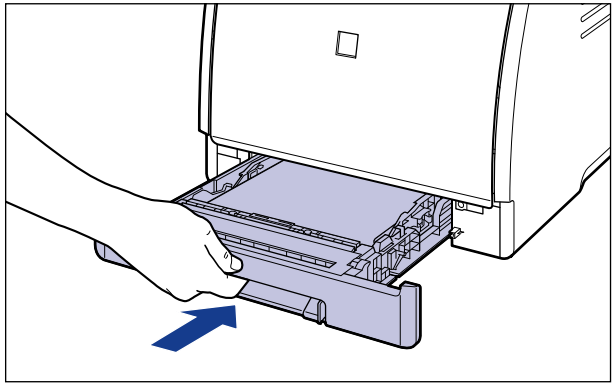

If the paper feeder is installed, set the paper cassette of the paper feeder also.

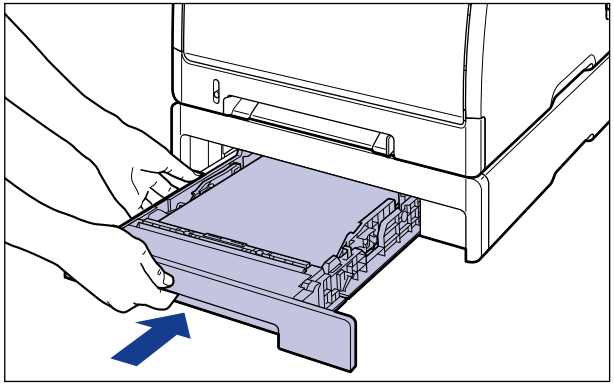

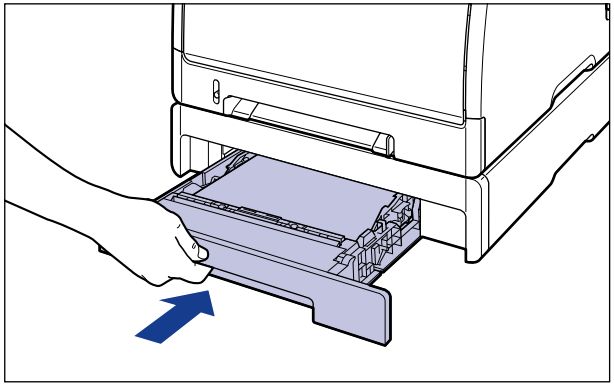

**CAUTION**

**When setting the paper cassette in the printer, be careful not to catch your fingers.**

## 13 Close the top cover.

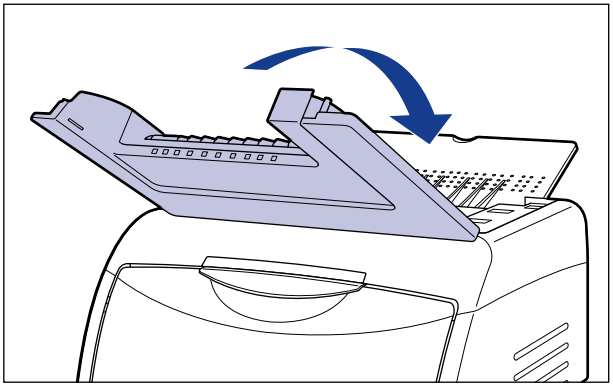

# The Alarm Indicator is On/Blinking

When a problem has occurred in the printer, the ⚠ (Alarm) indicator (orange) comes on or blinks. If the ⚠ (Alarm) indicator is on, see "The Alarm Indicator is On (a Service Error Appears)" (p. 7-21), and if the ⚠ (Alarm) indicator is blinking, see "The Alarm Indicator is Blinking" (p. 7-24).

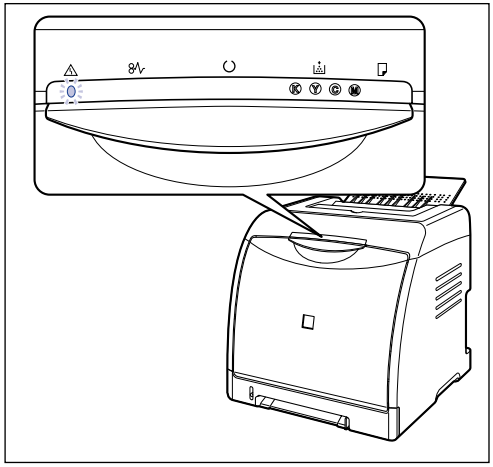

# The Alarm Indicator is On (a Service Error Appears)

When a problem has occurred and the printer does not work properly, the ⚠ (Alarm) indicator (orange) comes on and the following service error appears in the Printer Status Window.

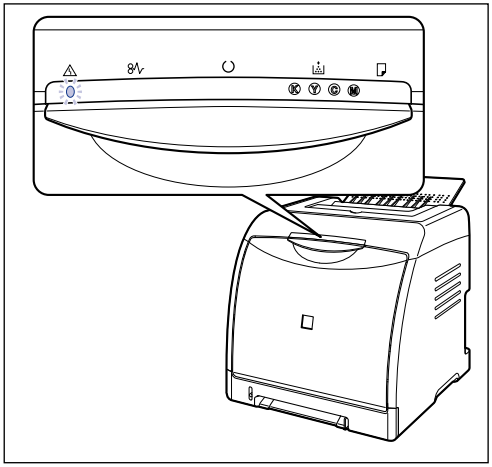

| Service Call | Cause | Remedy |
|---|---|---|
| 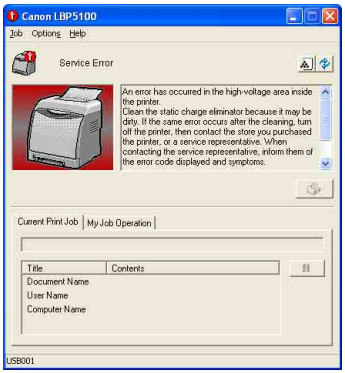 | A problem occurred in an area inside the printer which is subject to high-voltages. | 1. Clean the static charge eliminator using the procedure described in "Cleaning the Static Charge Eliminator" (p. 6-24).<br>2. Cycle the power of the printer using the following procedure. |

| Service Call | Cause | Remedy |
|---|---|---|
| | A problem occurred in the printer. | Cycle the power of the printer using the following procedure. |

NOTE

For details on methods for displaying the Printer Status Window, see "Displaying the Printer Status Window," on p. 5-92.

## 1 Turn the power OFF, wait for 10 seconds or longer, and then turn it ON again.

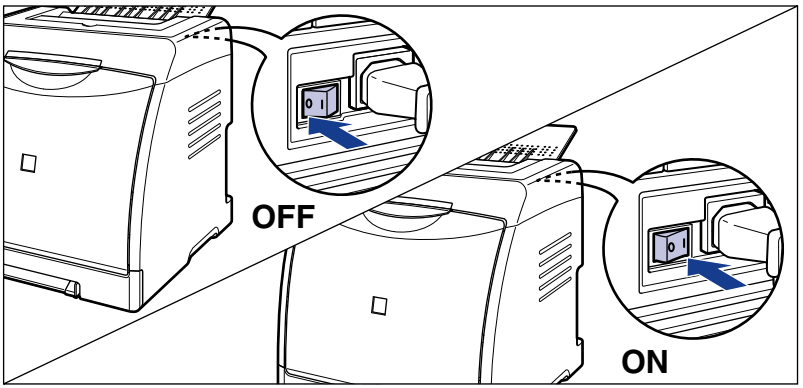


If the message does not reappear, the printer can be used as normal. If the error message still appears, proceed to the next step.

## 2 Note down the error code displayed in the Printer Status Window.

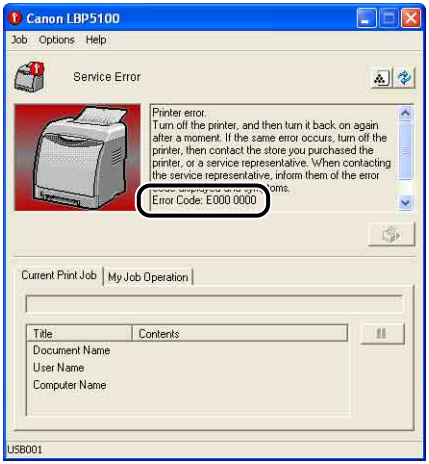


## 3 Perform the following procedure.

Turn the printer OFF ①.
If a USB cable is connected, turn the computer off ②, and then disconnect the USB cable ③.
Disconnect the power plug from the AC power outlet ④.

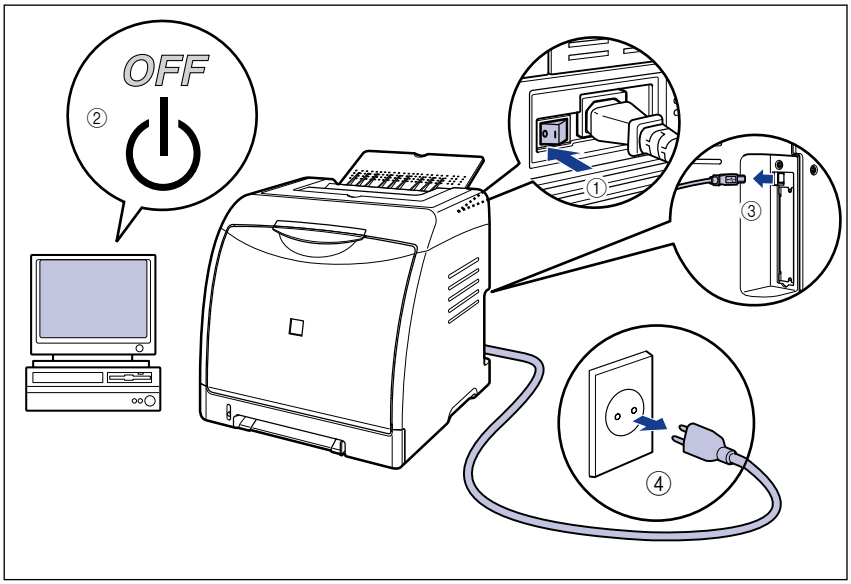

## 4 Contact your local authorized Canon dealer.

When contacting your Canon dealer, please report the problems and the error code that you have noted.

# The Alarm Indicator is Blinking

When an error has occurred in the printer and the printer needs some measures, the ⚠ (Alarm) indicator (orange) blinks and the following error message appears in the Printer Status Window.

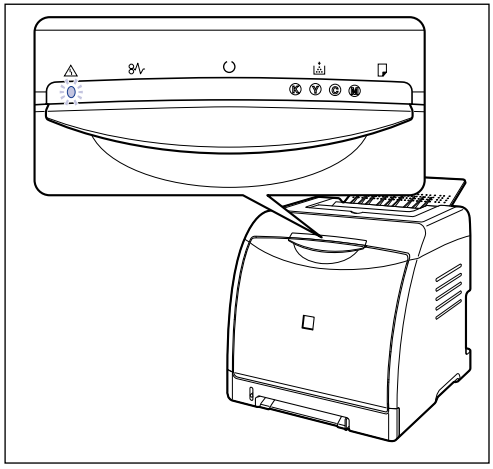

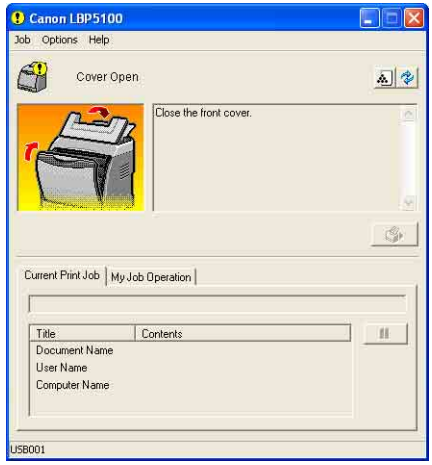


If an error message appears, follow the directions displayed in the Printer Status Window.

NOTE

For details on methods for displaying the Printer Status Window, see "Displaying the Printer Status Window," on p. 5-92.

# Print Quality Problems

If any problem occurs while you are using the printer, take the following measures depending on the symptoms.

IMPORTANT

- If a message appears in the Printer Status Window, follow the directions in the message.
- When a paper jam occurs, see "Paper Jams," on p. 7-3.
- If a symptom that is not indicated in this section occurs, if none of the indicated remedies solve the problem, or if you cannot determine the problem, contact your local authorized Canon dealer.

## Paper comes out in certain color and nothing is printed on it.

| | |
|---|---|
| Cause 1 | The drum in any of the toner cartridges has deteriorated. |
| Remedy | Replace the toner cartridge with a new one. (See "Replacing Toner Cartridges," on p. 6-2) |
| Cause 2 | A problem has occurred inside the printer. |
| Remedy 1 | If <Service Error> is displayed in the Printer Status Window, turn the power OFF, wait for 10 seconds or longer, and then turn the power ON again. This may clear the message. |
| Remedy 2 | If the message does not disappear even after applying the Remedy 1, contact your local authorized Canon dealer for servicing. |

## White streaks appear.

| | |
|---|---|
| Cause | The drum in any of the toner cartridges has deteriorated. |
| Remedy | Replace the toner cartridge with a new one. (See "Replacing Toner Cartridges," on p. 6-2) |

## Vertical streaks appear.

| | |
|---|---|
| Cause | Printing was performed using the static charge eliminator. |
| Remedy | Select the [Reduce Vertical Streaks on Outputs] check box in [Assisting Print Settings] in [Device Settings] in the [Options] menu in the Printer Status Window. Then, cycle the power of the printer to make the setting effective. When the [Reduce Vertical Streaks on Outputs] check box is selected, however, print quality other than vertical streaks may deteriorate. |

## Printed pages have white specks.

| | |
|---|---|
| Cause 1 | Appropriate paper is not being used. |
| Remedy | Replace the paper with one that can be used and print again. (See "Paper Requirements," on p. 3-2) |
| Cause 2 | Paper is damp since the paper has been stored in unsuitable condition. |
| Remedy | Replace the paper with new one and print again. (See "Paper Requirements," on p. 3-2) |
| Cause 3 | The drum in any of the toner cartridges has deteriorated. |
| Remedy | Replace the toner cartridge with a new one. (See "Replacing Toner Cartridges," on p. 6-2) |

## Residual images appear on non-printed areas.

| | |
|---|---|
| Cause 1 | Printing paper is inappropriate. |
| Remedy | Change the paper and print again. (See "Paper Requirements," on p. 3-2) |
| Cause 2 | Paper of a wider width was printed just after paper with a narrower width (A5 size etc.) was printed continuously. |
| Remedy | To lower the temperature of the fixing unit, wait for a while before printing again. |
| Cause 3 | The drum in any of the toner cartridges has deteriorated. |
| Remedy | Replace the toner cartridge with a new one. (See "Replacing Toner Cartridges," on p. 6-2) |

## The overall print result is faint.

**Cause 1** The setting for [Toner Density] is not appropriate.

**Remedy** Drag the [Toner Density] slider in the printer driver toward [Dark].
In order to specify the setting for [Toner Density], display the [Custom Settings] dialog box by clicking [Settings] in the [Quality] sheet.

**Cause 2** [Toner Save] is enabled.

**Remedy** Clear the [Toner Save] check box in the printer driver.
In order to specify the setting for [Toner Save], display the [Custom Settings] dialog box by clicking [Settings] in the [Quality] sheet.

## The overall print result is dark.

**Cause 1** The setting for [Toner Density] is not appropriate.

**Remedy** Drag the [Toner Density] slider in the printer driver toward [Light].
In order to specify the setting for [Toner Density], display the [Custom Settings] dialog box by clicking [Settings] in the [Quality] sheet.

**Cause 2** The printer is exposed to direct sunlight or strong light.

**Remedy** Move the printer to a place where it will not be exposed to direct sunlight or strong light. Alternatively, move the strong light source away from the printer.

## The print is uneven.

**Cause 1** Paper is too moist or too dry.

**Remedy** Replace the paper with appropriate one and print again. (See "Paper Requirements," on p. 3-2)

**Cause 2** The toner cartridge has run out of toner, has deteriorated, or is damaged.

**Remedy** Display the [Consumables/Counters] dialog box, then replace the toner cartridge that is almost empty with a new toner cartridge. (See "Replacing Toner Cartridges," on p. 6-2)

**Cause 3** The printer has not printed for a long period of time.

**Remedy** Set [Special Print Mode] to [Special Settings 5] in the printer driver.
In order to specify the setting for [Special Print Mode], display the [Advanced Settings] dialog box by clicking [Finishing Details] in the [Finishing] sheet, and then clicking [Advanced Settings] in the [Finishing Details] dialog box.

IMPORTANT

Normally, use the printer with [Special Print Mode] set to [Off]. Set [Special Print Mode] to [Special Settings 5] only when this problem occurs.

### Thin streaks appear on the top or rear edge portion of the printed paper.

**Cause** Data in halftones was printed in a low-humidity environment.

**Remedy 1** Set [Special Print Mode] to [Special Settings 3] in the printer driver.
In order to specify the setting for [Special Print Mode], display the [Advanced Settings] dialog box by clicking [Finishing Details] in the [Finishing] sheet, and then clicking [Advanced Settings] in the [Finishing Details] dialog box.
Alternatively, when you print the other side of paper previously printed by this printer, selecting the [Print on the Other Side] check box may alleviate poor print quality.
In order to specify the setting for [Print on the Other Side], display the [Paper Source] sheet.

IMPORTANT

Normally, use the printer with [Special Print Mode] set to [Off]. Set [Special Print Mode] to [Special Settings 3] only when this problem occurs.

**Remedy 2** Replace the paper with one whose package has just been opened and print again. (See "Paper Requirements," on p. 3-2)

### Front or back of the printed paper has smudge marks.

**Cause** The fixing roller is dirty.

**Remedy** Clean the fixing roller. (See "Cleaning the Fixing Roller," on p. 6-22)

### Smudge marks of spattering toner appear around the text or patterns.

**Cause 1** Paper is inappropriate.

**Remedy** Replace the paper with one that can be used and print again. (See "Paper Requirements," on p. 3-2)

**Cause 2** The printer is being used in a low-humidity environment.

**Remedy** Set [Special Print Mode] to [Special Settings 3] in the printer driver.
In order to specify the setting for [Special Print Mode], display the [Advanced Settings] dialog box by clicking [Finishing Details] in the [Finishing] sheet, and then clicking [Advanced Settings] in the [Finishing Details] dialog box.

IMPORTANT

Normally, use the printer with [Special Print Mode] set to [Off]. Set [Special Print Mode] to [Special Settings 3] only when this problem occurs.

### Images in which two or more colors are overlaid come out faint.

**Cause 1** Paper is inappropriate.

**Remedy** Replace the paper with one that can be used with this printer. (See "Paper Requirements," on p. 3-2)

**Cause 2** The printer is being used in a high-humidity environment.

**Remedy** Set [Special Print Mode] to [Special Settings 1] in the printer driver.
In order to specify the setting for [Special Print Mode], display the [Advanced Settings] dialog box by clicking [Finishing Details] in the [Finishing] sheet, and then clicking [Advanced Settings] in the [Finishing Details] dialog box.

**IMPORTANT**

Normally, use the printer with [Special Print Mode] set to [Off]. Set [Special Print Mode] to [Special Settings 1] only when this problem occurs.

### Thin lines or halftone areas come out faint.

**Cause 1** Paper is inappropriate.

**Remedy** Replace the paper with one that can be used with this printer. (See "Paper Requirements," on p. 3-2)

**Cause 2** The printer is being used in a high-humidity environment.

**Remedy** Set [Special Print Mode] to [Special Settings 2] in the printer driver.
In order to specify the setting for [Special Print Mode], display the [Advanced Settings] dialog box by clicking [Finishing Details] in the [Finishing] sheet, and then clicking [Advanced Settings] in the [Finishing Details] dialog box.

**IMPORTANT**

Normally, use the printer with [Special Print Mode] set to [Off]. Set [Special Print Mode] to [Special Settings 2] only when this problem occurs.

### When printing is performed with [Paper Type] in the [Paper Source] sheet set to [Heavy Paper 2], toner gets on the non-printed areas.

**Cause** Depending on the printer status, toner may get on the non-printed areas.

**Remedy** Set [Special Print Mode] to [Special Settings 6] in the printer driver.
In order to specify the setting for [Special Print Mode], display the [Advanced Settings] dialog box by clicking [Finishing Details] in the [Finishing] sheet, and then clicking [Advanced Settings] in the [Finishing Details] dialog box.

IMPORTANT

Normally, use the printer with [Special Print Mode] set to [Off]. Set [Special Print Mode] to [Special Settings 6] only when this problem occurs.

### Outlines in the areas dense in color are emphasized.

**Cause** Depending on the print data, outlines in the areas dense in color are sometimes emphasized.

**Remedy** Set [Special Print Mode] to [Special Settings 7] in the printer driver.
In order to specify the setting for [Special Print Mode], display the [Advanced Settings] dialog box by clicking [Finishing Details] in the [Finishing] sheet, and then clicking [Advanced Settings] in the [Finishing Details] dialog box.

IMPORTANT

Normally, use the printer with [Special Print Mode] set to [Off]. Set [Special Print Mode] to [Special Settings 7] only when this problem occurs.

### A portion of a page is not printed.

**Cause 1** The scale factor is incorrect.

**Remedy 1** Clear the [Manual Scaling] check box in the printer driver. If the check box is cleared, the scale factor will be set according to [Page Size] and [Output Size] automatically.
In order to specify the setting for [Manual Scaling], display the [Page Setup] sheet.

**Remedy 2** Select the [Manual Scaling] check box in the printer driver, then specify an appropriate scale factor according to the paper size to be used.
In order to specify the setting for [Manual Scaling], display the [Page Setup] sheet.

**Cause 2** The position of the paper is incorrect.

**Remedy** Load the paper properly. (See "Loading Plain Paper, Heavy Paper, Transparencies, or Labels in the Paper Source," on p. 3-17, "Loading Index Card Size Media in the Paper Source," on p. 3-29, "Loading Envelopes in the Paper Source," on p. 3-40, "Loading Custom Size Paper (Non-Standard Paper) or Paper at a Size of Statement, Foolscap, or 16K in the Paper Source," on p. 3-51)

**Cause 3** A document with no margins was printed.

**Remedy 1** Data cannot be printed within a 5 mm margin (10 mm for envelopes (7.6 mm for the right margin)) on all sides of the paper. Secure a margin around the data.

**Remedy 2** Select the [Print with Upper Left of Sheet as Starting Point] check box in the printer driver, then print the document.
In order to specify the setting for [Print with Upper Left of Sheet as Starting Point], display the [Finishing Details] dialog box by clicking [Finishing Details] in the [Finishing] sheet.

**IMPORTANT**

The edge of paper may be missing partly, or optimum print quality may not be obtained depending on the print data to be printed.

### The printing position is skewed.

**Cause 1** [Gutter] is specified.

**Remedy** Specify [Gutter] in the printer driver to [0].
In order to specify the setting for [Gutter], display the [Gutter Settings] dialog box by clicking [Gutter] in the [Finishing] sheet.

**Cause 2** "Top Margin" and "Paper Position" in the application are not specified properly.

**Remedy** Specify the settings for "Top Margin" and "Paper Position" in the application properly. (See the instruction manual supplied with the application.)

### The next page is printed from halfway across the previous page.

**Cause** "Line Spacing" or "Lines/Page" in the application is not specified properly.

**Remedy** Specify the settings for "Line Spacing" and "Lines/Page" in the application so that data fits in one page, and print again. (See the instruction manual supplied with the application.)

### Nothing is printed on paper.

**Cause 1** The toner cartridge was installed with the sealing tape still attached.

**Remedy** Take the toner cartridge out of the printer, pull out the sealing tape, and reinstall the toner cartridge. (See "Replacing Toner Cartridges," on p. 6-2)

**Cause 2** Multiple sheets of paper were fed at a time.

**Remedy** Align the paper stack in the paper cassette properly and load it again. If you are using transparencies or labels, fan them thoroughly and load them again. (See "Loading Plain Paper, Heavy Paper, Transparencies, or Labels in the Paper Source," on p. 3-17, "Loading Index Card Size Media in the Paper Source," on p. 3-29, "Loading Envelopes in the Paper Source," on p. 3-40, "Loading Custom Size Paper (Non-Standard Paper) or Paper at a Size of Statement, Foolscap, or 16K in the Paper Source," on p. 3-51)

## Toner does not fix onto paper completely.

**Cause 1** Appropriate paper is not being used.

**Remedy** Replace the paper with one that can be used with this printer. (See "Paper Requirements," on p. 3-2)

**Cause 2** Coarse paper is being used.

**Remedy 1** Set [Paper Type] to [Heavy Paper 1] or [Heavy Paper 2] in the printer.
In order to specify the setting for [Paper Type], display the [Paper Source] sheet.

**Remedy 2** Set [Special Print Mode] to [Special Settings 4] in the printer driver.
In order to specify the setting for [Special Print Mode], display the [Advanced Settings] dialog box by clicking [Finishing Details] in the [Finishing] sheet, and then clicking [Advanced Settings] in the [Finishing Details] dialog box.

**IMPORTANT**

Normally, use the printer with [Special Print Mode] set to [Off]. Set [Special Print Mode] to [Special Settings 4] only when this problem occurs.

**Cause 3** A problem has occurred inside the printer.

**Remedy 1** If <Service Error> is displayed in the Printer Status Window, turn the power OFF, wait for 10 seconds or longer, and then turn the power ON again. This may clear the message.

**Remedy 2** If the message does not disappear even after applying the Remedy 1, contact your local authorized Canon dealer for servicing.

## Colored lines and text come out faint.

**Cause** Thin lines or text are being used.

**Remedy** Select the [Prioritize Printing of Colored Lines and Text] check box in the printer driver.
In order to specify the setting for [Prioritize Printing of Colored Lines and Text], display the [Custom Settings] dialog box by clicking [Settings] in the [Quality] sheet.

### Colored text appears to be blurred.

**Cause** A bold font is being used for the colored text.

**Remedy** Set [Matching Method] to [Perceptual [Monitor Color Matched]] in the printer driver.
In order to specify the setting for [Matching Method], display the [Matching] sheet by selecting the [Manual Color Settings] check box in the [Quality] sheet, and then clicking [Color Settings].

### The printing position is skewed slightly depending on the color to be printed.

**Cause** Although laser printers are manufactured with technology of high precision, a phenomenon of "Out-of-Register Colors" may be slightly conspicuous depending on the print image. Please note that this is due to the structure of laser printers, but not due to printer malfunction.

**Remedy 1** Perform calibration. (See "Calibrating the Printer," on p. 6-16)

**Remedy 2** If [Use Pure Black] in the printer driver is set to [Never], poor print quality (a phenomenon of "Out-of-Register Colors") may be alleviated. In order to specify the setting for [Use Pure Black], display the [Custom Settings] dialog box by clicking [Settings] in the [Quality] sheet.

### Data is not printed in the correct color (specified color), or colored text appears blurred due to a phenomenon of "Out-of-Register Colors".

**Cause 1** Any of the toner cartridges are not installed properly.

**Remedy** Make sure that the toner cartridges are installed properly. (See "Replacing Toner Cartridges," on p. 6-2)

**Cause 2** Any of the four color toner cartridges is almost out of toner, or the drum in any of the toner cartridges has deteriorated.

**Remedy 1** Perform calibration. (See "Calibrating the Printer," on p. 6-16)

**Remedy 2** Display the [Consumables/Counters] dialog box, then replace the toner cartridge that is almost empty with a new toner cartridge. (See "Replacing Toner Cartridges," on p. 6-2)

**Cause 3** Appropriate paper is not being used.

**Remedy** Replace the paper with one that can be used and print again. (See "Paper Requirements," on p. 3-2)

| | |
|---|---|
| Cause 4 | Data was sent before completing calibration, such as when the printer was first turned ON. |
| Remedy | Make sure that calibration is completed before sending data to the printer. |

NOTE

- When you select [Print Priority] from [Action for Calibration Request] in [Calibration Settings] in [Device Settings] in the [Options] menu in the Printer Status Window, and there is any job to be printed, the printing is prioritized even if calibration needs to be performed. Calibration is performed after the print job finishes. (See "Specifying Whether Calibration Should Be Prioritized," on p. 6-20)
- If you want to perform calibration manually, see "Performing Calibration Manually," on p. 6-16.

### The colors of thin lines or filled-in patterns are different from the specified colors, or do not appear at all.

| | |
|---|---|
| Cause 1 | Some colors cannot be reproduced due to the combination of colors or patterns. |
| Remedy 1 | Adjust the colors in the application and print again. |
| Remedy 2 | Change the patterns in the application and print again. |
| Cause 2 | The color may appear different depending on the fill-pattern. |
| Remedy | Readjust to a darker color and print again. |

### Fill-patterns are not printed in the correct color (specified color).

| | |
|---|---|
| Cause | The fill-pattern of the print data and the dither pattern of the printer are interfering with one another. |
| Remedy 1 | Print again without specifying a fill-pattern in the application. |
| Remedy 2 | Set [Color Halftones] or [B & W Halftones] to [Gradation] or [Color Tone] in the printer driver.<br>In order to specify the setting for [Color Halftones] or [B & W Halftones], display the [Custom Settings] dialog box by clicking [Settings] in the [Quality] sheet . |

### The displayed color and printed color differ when printing photos, etc.

**Cause** The method for adjusting color on the screen (RGB) and in the printer (YMC) is different. Therefore, there may be cases when the color on the screen cannot be printed out exactly as it appears.

**Remedy 1** Set [Matching Method] to [Perceptual [Monitor Color Matched]] in the printer driver.
In order to specify the setting for [Matching Method], display the [Matching] sheet by selecting the [Manual Color Settings] check box in the [Quality] sheet, and then clicking [Color Settings].

**Remedy 2** Adjust [Gamma] in the printer driver.
In order to specify the setting for [Gamma], display the [Matching] sheet by selecting the [Manual Color Settings] check box in the [Quality] sheet, and then clicking [Color Settings].

### Streaks appear in the gradated portions when printing diagrams with gradations.

**Cause** [Use Pure Black] is applied to the gray color portions of the "streaks" in the diagrams.

**Remedy** Set [Use Pure Black] to [Never] in the printer driver.
In order to specify the setting for [Use Pure Black], display the [Custom Settings] dialog box by clicking [Settings] in the [Quality] sheet.

### Data is not printed in the correct color (specified color) even after specifying the same color for a filled-in pattern and its border.

**Cause** A special process may be applied depending on the line width of the border so that thin lines are printed clearly.

**Remedy** Adjust the setting for [Gamma] in the printer driver.
In order to specify the setting for [Gamma], display the [Matching] sheet by selecting the [Manual Color Settings] check box in the [Quality] sheet, and then clicking [Color Settings].

### The back of the printed paper has smudge marks.

**Cause** The size of the print data was larger than that of the loaded paper.

**Remedy** Check if the size of the print data matches that of the loaded paper.

The print quality has deteriorated compared to when you just purchased the printer.

| | |
|---|---|
| Cause | The static charge eliminator is dirty. |
| Remedy | Clean the static charge eliminator. (See "Cleaning the Static Charge Eliminator," on p. 6-24) |

Square areas that cannot be seen on the display appear around lines or text and are printed in a different color from the other areas.

| | |
|---|---|
| Cause | A process that is different from the specified halftone process or color process may be applied depending on the operating system or application. |
| Remedy 1 | Set [Use Pure Black] to [Always] or [Never] in the printer driver.<br>In order to specify the setting for [Use Pure Black], display the [Custom Settings] dialog box by clicking [Settings] in the [Quality] sheet. |
| Remedy 2 | Set [Color Halftones] or [B & W Halftones] to any of [Resolution], [Gradation], or [Color Tone] in the printer driver.<br>In order to specify the setting for [Color Halftones] or [B & W Halftones], display the [Custom Settings] dialog box by clicking [Settings] in the [Quality] sheet . |

# Paper Problems

## Paper comes out wrinkled.

**Cause 1** Paper is loaded in the paper cassette or manual feed slot at an angle.

**Remedy** Load the paper in the paper cassette or manual feed slot straight. (See "Loading Plain Paper, Heavy Paper, Transparencies, or Labels in the Paper Source," on p. 3-17, "Loading Index Card Size Media in the Paper Source," on p. 3-29, "Loading Envelopes in the Paper Source," on p. 3-40, "Loading Custom Size Paper (Non-Standard Paper) or Paper at a Size of Statement, Foolscap, or 16K in the Paper Source," on p. 3-51)

**Cause 2** Paper is damp since the paper has been stored in unsuitable condition.

**Remedy** Replace the paper with new one and print again. (See "Paper Requirements," on p. 3-2)

## Paper curls.

**Cause 1** Paper is damp since the paper has been stored in unsuitable condition.

**Remedy** Replace the paper with new one and print again. (See "Paper Requirements," on p. 3-2)

**Cause 2** Paper is inappropriate.

**Remedy** Replace the paper with one that can be used with this printer. (See "Paper Requirements," on p. 3-2)

**Cause 3** The paper is too thin.

**Remedy 1** Set [Paper Type] to [Plain Paper L] in the printer driver.
In order to specify the setting for [Paper Type], display the [Paper Source] sheet.

Remedy 2 Specify the setting for [Paper Curl Correction at Output] as follows in the printer driver.
Specify [Front Side Correction (Minus Curl)] when the paper output to the output tray curls as shown in the following figure.

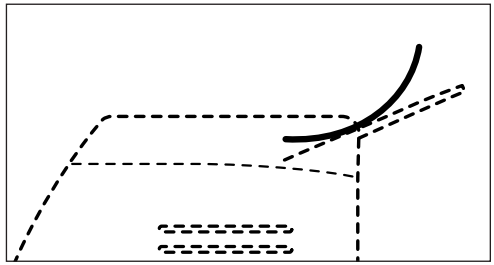

Specify [Back Side Correction (Plus Curl)] when the paper output to the output tray curls as shown in the following figure.

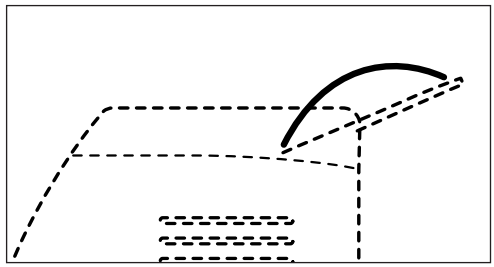

If this solves the problem, set [Paper Curl Correction at Output] to [Off].
In order to specify the setting for [Paper Curl Correction at Output], display the [Finishing Details] dialog box by clicking [Finishing Details] in the [Finishing] sheet.

## Flaps of the envelopes stick to the body.

Cause 1 Envelopes are inappropriate.

Remedy Replace the envelopes with those that can be used and print again. (See "Paper Requirements," on p. 3-2)

Cause 2 The fixing mode is not appropriate.

Remedy Set [Paper Type] to [Envelope L] in the printer driver.
In order to specify the setting for [Paper Type], display the [Paper Source] sheet.

# Installation Problems

If "USB Class Driver" and "LBP5100 Printer Driver" cannot be installed properly, perform the following procedure to check problems.

NOTE

For details on problems on the network installation, see "Chapter 4 Troubleshooting" in Network Guide.

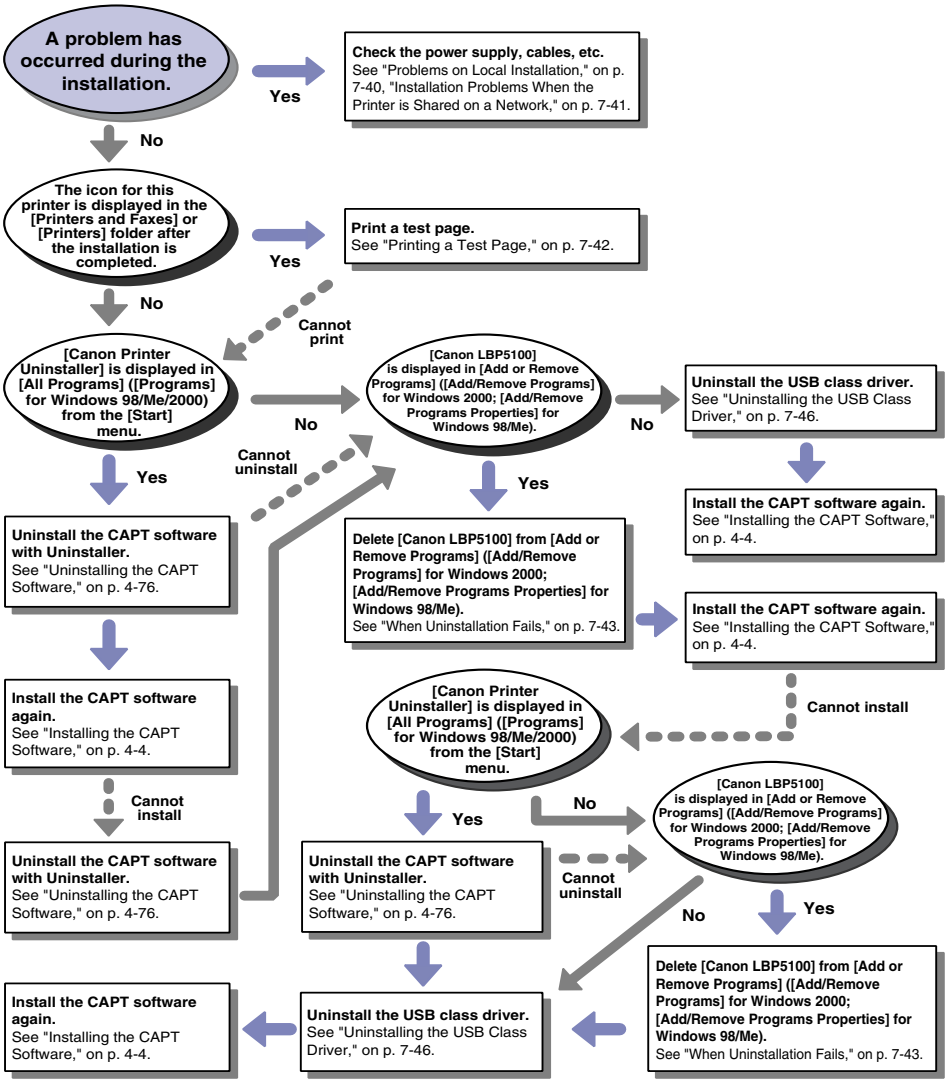

# Problems on Local Installation

When installing the printer driver from the CD-ROM, the printer is not recognized automatically even after the USB cable is connected.

**Cause 1** The USB cable has already been connected and the printer is ON before installing the printer driver.

**Remedy** Turn the printer OFF and disconnect the USB cable. Then, connect the USB cable again and turn the printer ON.

**Cause 2** The printer is OFF.

**Remedy** Turn the printer ON.

**Cause 3** The USB cable is not connected properly.

**Remedy** Make sure that the printer and computer are connected with the USB cable properly.

**Cause 4** An inappropriate USB cable is being used.

**Remedy** Use a USB cable appropriate for the USB interface of this printer. The USB interface of this printer is USB 2.0 Hi-Speed (Windows 2000/XP/Server 2003 only) and USB Full-Speed (USB1.1 equivalent).
Use a USB cable with the following symbol.

**Cause 5** The printer driver cannot be installed from CD-ROM Setup.

**Remedy** Install the printer driver with plug and play. (See "Installing with Plug and Play," on p. 4-13)

[Local printer attached to this computer]* cannot be selected in the [Add Printer Wizard] dialog box (Windows 2000/XP/Server 2003).

**Cause** Installation was performed by a user who is not a member of Administrators.

**Remedy** CAPT (Canon Advanced Printing Technology) software needs to be installed by a member of Administrators. Have a user with the correct permissions to install the software.

* On Windows 2000, this becomes [Local Printer].

# Installation Problems When the Printer is Shared on a Network

## The print server to be connected cannot be found.

**Cause 1** The print server has not been started up.

**Remedy** Start up the print server.

**Cause 2** The printer is not specified as a shared printer.

**Remedy** Specify the printer as a shared printer in the [Printer Properties] dialog box.

**Cause 3** The user does not have permission to access the print server or printer.

**Remedy** Ask your network administrator to change the user permissions.

## The shared printer cannot be accessed.

**Cause 1** The user of the computer to be used has not been registered, or the password has not been specified yet.

**Remedy** Register the user registration of the computer to be used or specify the password on the print server. For more details, ask your network administrator.

**Cause 2** The path to the network is not correct.

**Remedy 1** Check the following.

1. From the [Start] menu, select [All Programs] → [Accessories] → [Windows Explorer].
   For Windows Me/2000: From the [Start] menu, select [Programs] → [Accessories] → [Windows Explorer].
   For Windows 98: From the [Start] menu, select [Programs] → [Windows Explorer].

2. Select the print server from [My Network Places] (from [Network Neighborhood] for Windows 98), then confirm the icon for this printer.

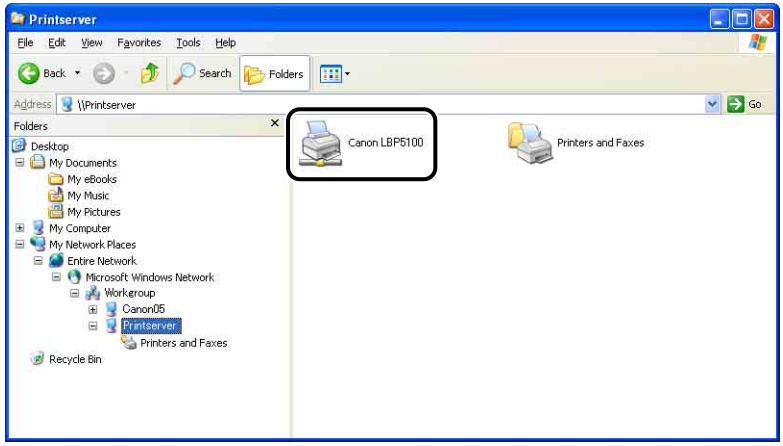


If you cannot find the icon for this printer, ask your network administrator.

To install the printer driver, double-click the icon for this printer or drag and drop it into the [Printers and Faxes] folder or [Printers] folder and follow the instructions on the screen.

Remedy 2 When installing the CAPT software from [Add Printer Wizard] and specifying the network path using "\" directly, check if the correct path is specified as "\\the print sever name (the computer name of the print server)\the printer name".



## Printing a Test Page

Check the following items if nothing is printed when printing from an application:

### 1 Check if any error message is displayed in the Printer Status Window.

IMPORTANT

If any error message appears, follow the directions in the message displayed in the Printer Status Window. For details on the Printer Status Window, see "Printer Status Window," on p. 5-89.

### 2 Print a test page.

● **For Windows 98/Me**

❑ Select the icon for this printer in the [Printers] folder, then select [Properties] from the [File] menu.

❑ Click [Print Test Page] in the [General] sheet in the [Printer Properties] dialog box.

● **For Windows 2000/XP/Server 2003**

❑ Select the icon for this printer in the [Printers and Faxes] or [Printers] folder, then select [Properties] from the [File] menu.

❑ Click [Print Test Page] in the [General] sheet in the [Printer Properties] dialog box.

### ■ When the test page is printed correctly

Printing can be performed from the CAPT software. Check the application to make sure that all the settings are specified properly.

### ■ When the test page cannot be printed

See "Installation Problems," on p. 7-39.

## When Uninstallation Fails

If you cannot uninstall the CAPT software using the Uninstaller that was created during installation, use the following procedure to uninstall the CAPT software from [Add or Remove Programs] ([Add/Remove Programs] for Windows 2000; [Add/Remove Programs Properties] for Windows 98/Me).

**1** **From the [Start] menu, select [Control Panel], and then click [Add or Remove Programs].**

For Windows 98/Me/2000: From the [Start] menu, select [Settings] → [Control Panel], and then double-click [Add/Remove Programs].
For Windows Server 2003: From the [Start] menu, select [Control Panel] → [Add or Remove Programs].

## 2 Select [Canon LBP5100] in the [Add or Remove Programs] dialog box, then click [Change/Remove].

For Windows 2000: Select [Canon LBP5100] in the [Add/Remove Programs] dialog box, then click [Change/Remove].
For Windows 98/Me: Select [Canon LBP5100] in the [Add/Remove Programs Properties] dialog box, then click [Add/Remove].

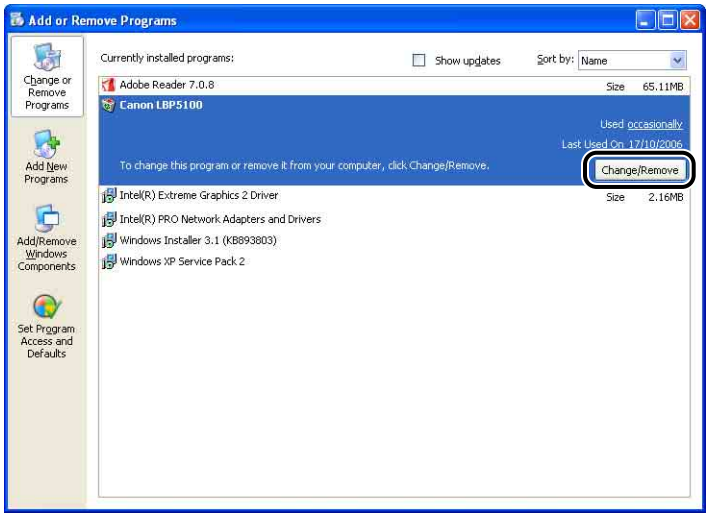


NOTE

If [Canon LBP5100] is not displayed in the [Add or Remove Programs] dialog box (the [Add/Remove Programs] dialog box for Windows 2000; the [Add/Remove Programs Properties] dialog box for Windows 98/Me), perform "Uninstalling the USB Class Driver" (See p. 7-46), and then install the CAPT software again.

## 3 Select the name of this printer, then click [Delete].

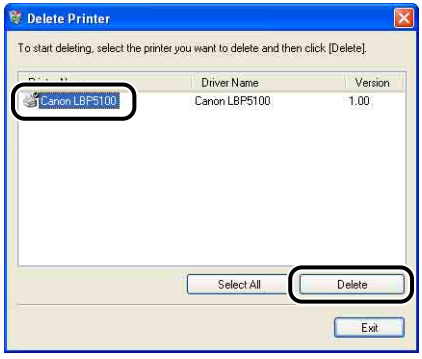

## 4 Click [Yes].

When the printer is used as a shared printer, the following screen appears. Confirm the contents of the message, and then click [Yes] if you want to uninstall the printer driver.

Uninstallation starts. Please wait a moment.

## 5 Click [Exit].

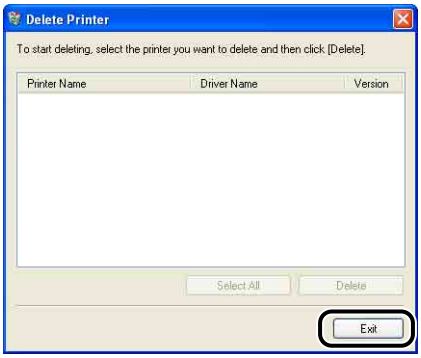


The [Delete Printer] dialog box closes.

## 6 Restart Windows.

# Uninstalling the USB Class Driver

Uninstalling the USB class driver is required when you cannot install the CAPT software properly after uninstalling it once or when you cannot uninstall the CAPT software.

**1** **Make sure that the computer is connected to the printer with the USB cable and that the printer is ON.**

**2** **From the [Start] menu, select [Control Panel], and then click [Add or Remove Programs].**

For Windows 98/Me/2000: From the [Start] menu, select [Settings] → [Control Panel], and then double-click [Add/Remove Programs].
For Windows Server 2003: From the [Start] menu, select [Control Panel] → [Add or Remove Programs].

**3** **Make sure that [Canon LBP5100] is not displayed in the [Add or Remove Programs] dialog box, and then click [ ].**

For Windows 2000: Make sure that [Canon LBP5100] is not displayed in the [Add/Remove Programs] dialog box, and then click [ ].
For Windows 98/Me: Make sure that [Canon LBP5100] is not displayed in the [Add/Remove Programs Properties] dialog box, and then click [ ].

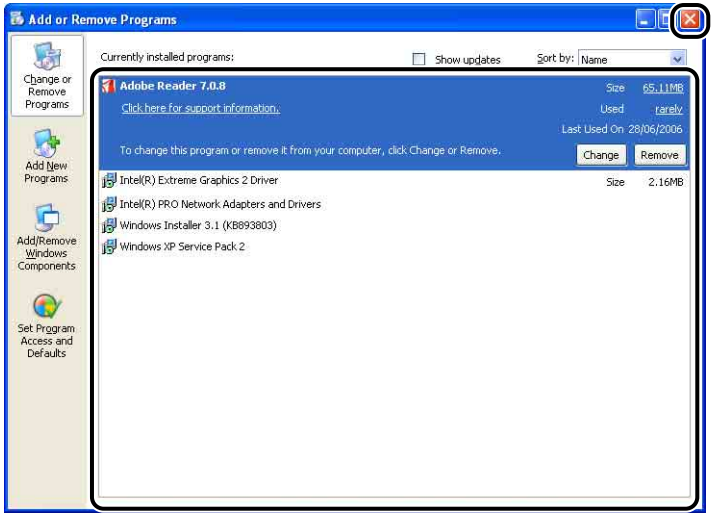

NOTE

If [Canon LBP5100] is displayed in the [Add or Remove Programs] dialog box (the [Add/Remove Programs] dialog box for Windows 2000; the [Add/Remove Programs Properties] dialog box for Windows 98/Me), see "When Uninstallation Fails" (p. 7-43) to delete [Canon LBP5100] from the [Add or Remove Programs] dialog box (the [Add/Remove Programs] dialog box for Windows 2000; the [Add/Remove Programs Properties] dialog box for Windows 98/Me).

## 4 From the [Start] menu, select [Control Panel], and then click [Performance and Maintenance] → [System].

For Windows 98/Me/2000: From the [Start] menu, select [Settings] → [Control Panel], and then double-click the [System] icon.
For Windows Server 2003: From the [Start] menu, select [Control Panel] → [System].

## 5 Click [Hardware] → [Device Manager], and then double-click [Universal Serial Bus controllers].

For Windows 98/Me: Display the [System Properties] dialog box, click the [Device Manager] tab, and then double-click [Universal Serial Bus controllers].

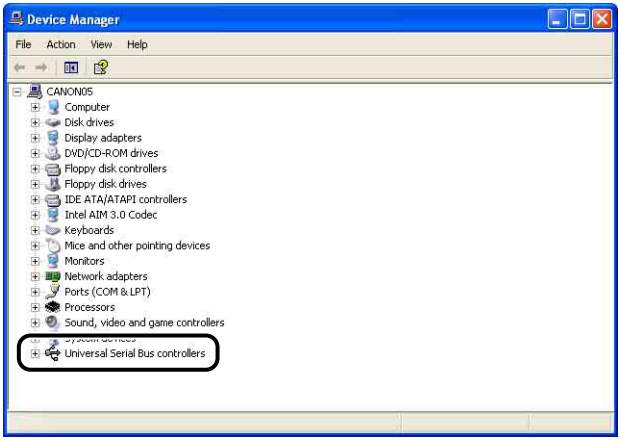

## 6 Right-click [USB Printing Support], then select [Uninstall] from the pop-up menu.

For Windows 98, select [Canon LBP5100], for Windows Me, select [Canon CAPT USB Device], and then click [Remove].

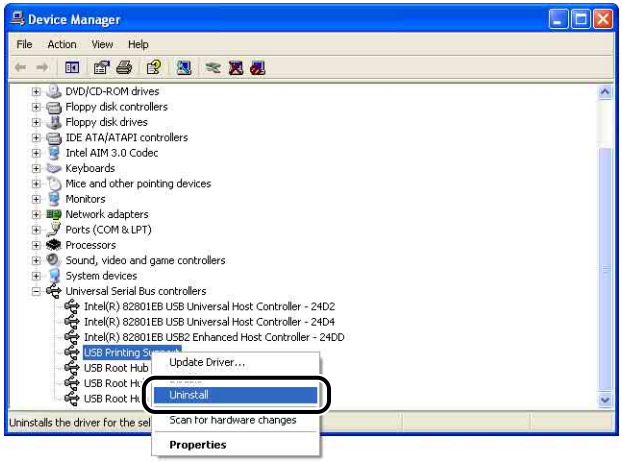


IMPORTANT

- If the USB class driver is under [Other Devices], the printer is not installed properly. According to your operating system, select and delete any one of [Canon LBP5100], [Canon CAPT USB Device], or [Unknown device].
- Never delete any drivers for other devices. If you delete them by mistake, Windows may not operate properly.
- If the USB class driver is not installed properly, [USB Printing Support] (for Windows 2000/XP/Server 2003), [Canon CAPT USB Device] (for Windows Me), or [Canon LBP5100] (for Windows 98) is not displayed.

## 7 When the [Confirm Device Removal] dialog box appears, click [OK].

## 8 Click [✕].

[Device Manager] closes.

## 9 Disconnect the USB cable from the computer, then restart Windows.

After Windows restarts, reinstall the CAPT software. (See "Installing the CAPT Software," on p. 4-4)

# When Data is Not Sent to the Printer

NOTE

When the printer and computer are connected by a LAN cable, see "Chapter 4 Troubleshooting" in Network Guide.

## When the Printer and Computer are Connected by a USB Cable

The following are probable causes when the printer and computer are connected by a USB cable, and the data cannot be printed because it is not sent to the printer. Take the appropriate measures.

### The printer is not turned ON.

| | |
|---|---|
| Cause 1 | The power plug is unplugged from the AC power outlet. |
| Remedy | Plug the power plug into the AC power outlet. |
| Cause 2 | The printer is plugged to an extension cord or multiple power strip. |
| Remedy | Plug the power plug of the printer directly into an AC power outlet on the wall. |
| Cause 3 | The breakers have tripped. |
| Remedy | Reset the breakers on the switch board. |
| Cause 4 | There is a break in the power cord. |
| Remedy | If the printer is turned ON after replacing the power cord with the one that is of the same type and is used for other device, there is a break in the power cord. In this case, purchase a new power cord and replace it with the broken one. |

### The USB cable is not connected properly.

| | |
|---|---|
| Cause 1 | The USB cable is disconnected. |
| Remedy | Make sure that the printer and computer are connected with the USB cable properly. |

**Cause 2** An inappropriate USB cable is being used.

**Remedy** Use a USB cable appropriate for the USB interface of this printer. The USB interface of this printer is USB 2.0 Hi-Speed (Windows 2000/XP/Server 2003 only) and USB Full-Speed (USB1.1 equivalent). Use a USB cable with the following symbol.

## An inappropriate port is being used.

**Cause** The port to be used is not selected properly.

**Remedy** Perform the following procedure.

1. Display the [Printers and Faxes] folder or the [Printers] folder.
   For Windows 98/Me/2000: From the [Start] menu, select [Settings] → [Printers].
   For Windows XP Professional/Server 2003: From the [Start] menu, select [Printers and Faxes].
   For Windows XP Home Edition: From the [Start] menu, select [Control Panel], and then click [Printers and Other Hardware] → [Printers and Faxes].
2. Select the icon for this printer, then select [Properties] from the [File] menu.
3. Display the [Ports] sheet ([Details] sheet for Windows 98/Me), then make sure that the port to be used is selected properly.

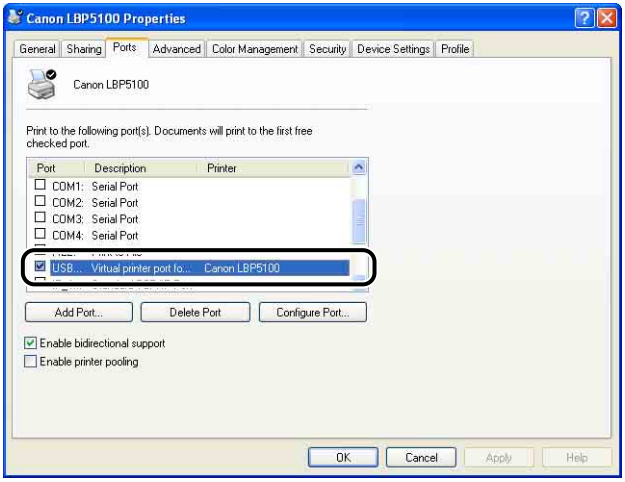


If the appropriate port is not selected, select the appropriate one, and then click [OK].

If you cannot find the port to be used, uninstall the printer driver and install it again. (See "Uninstalling the CAPT Software," on p. 4-76, "Installing the CAPT Software," on p. 4-4)

# When the Printer is Shared on a Network

The following are probable causes when the printer is shared on a network, and the data cannot be printed because it is not sent to the printer. Take the appropriate measures.

## The printer is not turned ON.

**Cause 1** The power plug is unplugged from the AC power outlet.

**Remedy** Plug the power plug into the AC power outlet.

**Cause 2** The printer is plugged to an extension cord or multiple power strip.

**Remedy** Plug the power plug of the printer directly into an AC power outlet on the wall.

**Cause 3** The breakers have tripped.

**Remedy** Reset the breakers on the switch board.

**Cause 4** There is a break in the power cord.

**Remedy** If the printer is turned ON after replacing the power cord with the one that is of the same type and is used for other device, there is a break in the power cord. In this case, purchase a new power cord and replace it with the broken one.

## The interface cable is not connected properly.

**Cause 1** The interface cable is disconnected.

**Remedy** Make sure that the printer is connected to the print server, and the print server is connected to the client computer by the interface cable properly.

**Cause 2** An inappropriate USB cable is being used.

**Remedy** When connecting the printer using a USB cable, use a USB cable appropriate for the USB interface of this printer. The USB interface of this printer is USB 2.0 Hi-Speed (Windows 2000/XP/Server 2003 only) and USB Full-Speed (USB1.1 equivalent). Use a USB cable with the following symbol.

## A problem has occurred in the print server.

**Cause 1** The print server is not turned on.

**Remedy** Turn on the print server.

| | |
|---|---|
| Cause 2 | The print server is not connected to the network properly. |
| Remedy 1 | Make sure that the print server and network are connected by a LAN cable properly. |
| Remedy 2 | Make sure that the network settings for the print server are appropriate. |
| Cause 3 | The additional driver (alternate driver) is not updated properly. |
| Remedy | To update the additional driver (alternate driver), uninstall the printer driver used in the print server, install the new printer driver, and then see "Print Server Settings" (p. 4-56) and install the additional driver. |
| Cause 4 | You are using a computer with Windows XP Service Pack 2 or another operating system equipped with Windows Firewall as the print server, and Windows Firewall is configured to block communication with the client computers. |
| Remedy | Start up the print server, then configure Windows Firewall to unblock communication with the client computers. (See "Configuring Windows Firewall to Unblock Communication with the Client Computers," on p. 9-15) |

### A problem has occurred in a client computer.

| | |
|---|---|
| Cause | You are using a computer with Windows XP Service Pack 2 or another operating system equipped with Windows Firewall as a client computer, and Windows Firewall is blocking communication with the print server. |
| Remedy | Configure Windows Firewall to unblock communication with the print server. (See "Configuring Windows Firewall to Unblock Communication with the Print Server," on p. 9-19) |

### The network path to the print server is not correct.

| | |
|---|---|
| Cause 1 | An incorrect network path was specified on the installation of the printer driver. |
| Remedy | When installing the CAPT software from [Add Printer Wizard] and specifying the network path using "\" directly, specify the correct path as "\\the print sever name (the computer name of the print server)\the printer name". |
| Cause 2 | The network path to the print server was changed. |
| Remedy | Ask your network administrator about the problem. |

# Miscellaneous Problems

NOTE

For details on problems on installing the optional network board, see "Chapter 4 Troubleshooting" in Network Guide.

## LBP5100 does not function properly.

| | |
|---|---|
| Cause 1 | LBP5100 is not specified as the default printer. |
| Remedy | Specify it as the default printer. |
| Cause 2 | The CAPT software may not be installed properly. |
| Remedy | In order to check if the CAPT software is installed properly, print from an application. If you cannot print properly, uninstall the CAPT software and install it again. (See "Uninstalling the CAPT Software," on p. 4-76, "Installing the CAPT Software," on p. 4-4) |

## The printer stops printing temporarily.

| | |
|---|---|
| Cause | When printing after the paper is changed from narrower one to wider one, the printer cools down the fixing unit so that the print quality is maintained. |
| Remedy | Please wait a moment. The printer cools down the fixing unit automatically. When the printer finished cooling down the fixing unit, it stops operation and becomes ready to print. If the printer was in the middle of printing, it resumes the job after finishing the cool down process. |

## CD-ROM Setup does not appear automatically. (Windows 98/Me only)

| | |
|---|---|
| Cause | [Auto insert notification] is not selected. |
| Remedy | Display the properties for the CD-ROM drive from [Device Manager] and select [Auto insert notification] in the [Settings] sheet. |

When the printer is shared over a network, it takes a long time to obtain the status in the Printer Status Window.

| | |
|---|---|
| Cause | You are using a computer with Windows XP Service Pack 2 or another operating system equipped with Windows Firewall as the print server, and Windows Firewall is configured to block communication with the client computers. |
| Remedy | Start up the print server, then configure Windows Firewall to unblock communication with the client computers. (See "Windows Firewall," on p. 9-14) |

The printer status is not displayed properly in the Printer Status Window when the printer is shared over a network.

| | |
|---|---|
| Cause | You are using a computer with Windows XP Service Pack 2 or another operating system equipped with Windows Firewall as a client computer, and Windows Firewall is blocking communication with the print server. |
| Remedy | Configure Windows Firewall to unblock communication with the print server. (See "Windows Firewall," on p. 9-14) |

# Confirming the Printer Features

This printer is provided with a function of Configuration Page Print that allows you to confirm the optional settings of the printer, settings for [Device Settings] in the [Options] menu in the Printer Status Window, and the current printer status such as [Number of Total Printed Pages]. The printer driver is also provided with a function of Network Status Print that allows you to check the version of the optional network board or confirm the TCP/IP settings. Use these functions when required after installing and connecting the printer, for example when you want to check the operation.

NOTE

- Configuration Page Print is designed to be printed on A4 size paper. Load A4 size paper.
- For details on Network Status Print, see "Chapter 4 Troubleshooting" in Network Guide.

## 1 Display the Printer Status Window.

For details on methods for displaying the Printer Status Window, see "Displaying the Printer Status Window," on p. 5-92.

## 2 From the [Options] menu in the Printer Status Window, select [Utility] → [Configuration Page Print].

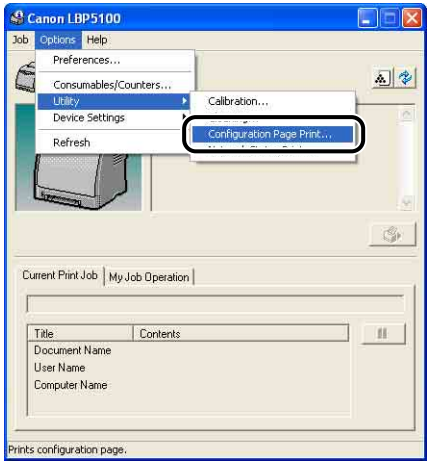


A confirmation message is displayed.

## 3 Click [OK].

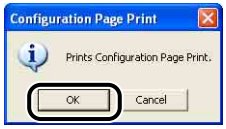


Configuration Page Print is printed.

## 4 Confirm the contents of the Configuration Page Print.

Configuration Page Print prints information as shown in the following figure. You can confirm the optional settings of the printer, settings for [Device Settings] in the [Options] menu in the Printer Status Window, and the current printer status such as [Number of Total Printed Pages].

**IMPORTANT**

This is a sample of Configuration Page Print. The contents may differ from the Configuration Page Print printed by your printer.

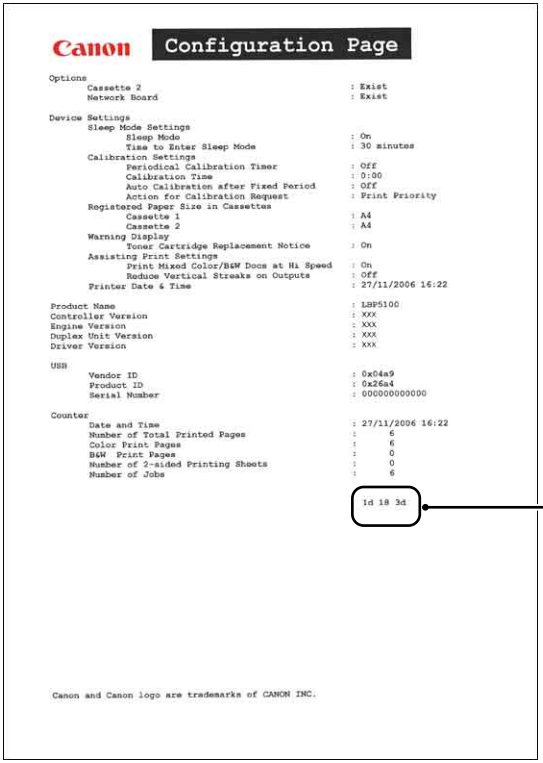

Canon **Configuration Page**

```
Options
        Cassette 2                                      : Exist
        Network Board                                   : Exist

Device Settings
        Sleep Mode Settings
                Sleep Mode                              : On
                Time to Enter Sleep Mode                : 30 minutes
        Calibration Settings
                Periodical Calibration Timer            : Off
                Calibration Time                        : 0:00
                Auto Calibration after Fixed Period     : Off
                Action for Calibration Request          : Print Priority
        Registered Paper Size in Cassettes
                Cassette 1                              : A4
                Cassette 2                              : A4
        Warning Display
                Toner Cartridge Replacement Notice      : On
        Assisting Print Settings
                Print Mixed Color/B&W Docs at Hi Speed  : On
                Reduce Vertical Streaks on Outputs      : Off
        Printer Date & Time                             : 27/11/2006 16:22

Product Name                                            : LBP5100
Controller Version                                      : XXX
Engine Version                                          : XXX
Duplex Unit Version                                     : XXX
Driver Version                                          : XXX

USB
        Vendor ID                                       : 0x04a9
        Product ID                                      : 0x26a4
        Serial Number                                   : 000000000000

Counter
        Date and Time                                   : 27/11/2006 16:22
        Number of Total Printed Pages                   :      6
        Color Print Pages                               :      6
        B&W  Print Pages                                :      0
        Number of 2-sided Printing Sheets               :      0
        Number of Jobs                                  :      6

                                                        1d 18 3d

Canon and Canon logo are trademarks of CANON INC.
```

The six-digit alphanumeric printed here is required for receiving service or repairs. It is not required for using the printer as normal.

# Installing the Optional Accessories

8

CHAPTER

This chapter describes the procedures for installing the optional accessories on the printer.


Paper Feeder . . . . . 8-2

Moving the Printer . . . . . 8-3

Removing the Packing Materials and Installing the Paper Feeder . . . . . 8-8

Removing the Paper Feeder . . . . . 8-15

Network Board . . . . . 8-18

Parts and Their Functions . . . . . 8-20

Installing the Network Board . . . . . 8-21

Setting the Network Board . . . . . 8-25

Resetting the Network Board . . . . . 8-28

Removing the Network Board . . . . . 8-31

# Paper Feeder

The paper feeder is to be installed at the bottom of the printer unit.

Make sure that all the following items are contained in the package before installing the paper feeder. If any item is missing or damaged, please contact your local authorized Canon dealer.

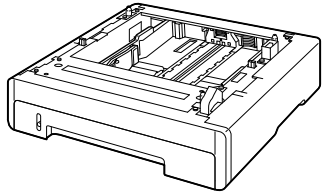

Paper Feeder Unit PF-92

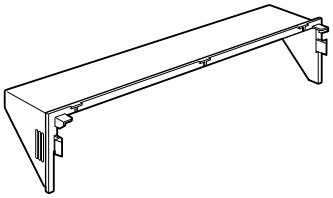

Cassette protective cover

**WARNING**

**Be sure to turn the printer OFF, unplug the power plug, and then disconnect all the interface cables and power cord from the printer before installing the paper feeder. Otherwise, the power cord or interface cables may be damaged, resulting in a fire or electrical shock.**

IMPORTANT

- Do not touch the connector (A) in the paper feeder. This may result in damage to the printer or misfeeds.

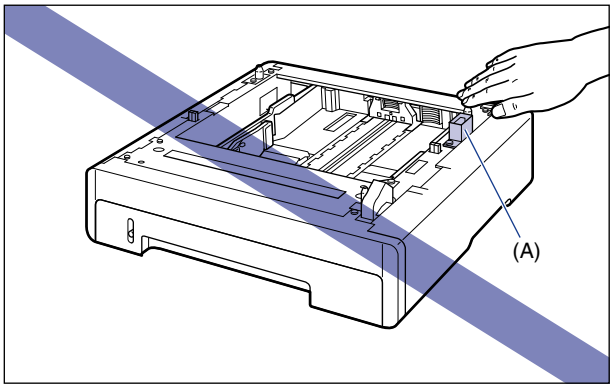


- If you are printing from Cassette 2, make sure that Cassette 1 is set before printing. If you print from Cassette 2 when Cassette 1 is not set, this will cause paper jams.

NOTE

Load paper in the paper feeder in the same manner as you load paper in Cassette 1. For more details, see "Chapter 3 Loading and Outputting Paper".

## Moving the Printer

When installing the paper feeder in the printer after installing the printer, move the printer to an appropriate location temporarily using the following procedure.

**WARNING**

**Be sure to turn the printer and computer OFF, unplug the power plug, and then disconnect all the interface cables from the printer before moving the printer. Otherwise, the power cord or interface cables may be damaged, resulting in a fire or electrical shock.**

**CAUTION**

**Do not carry the printer with the paper cassette attached. If you do so, the paper cassette may drop resulting in personal injury.**

### 1 Perform the following procedure.

Turn the printer OFF ①.
If a USB cable is connected, turn the computer off ②, and then disconnect the USB cable ③.
Disconnect the power plug from the AC power outlet ④.

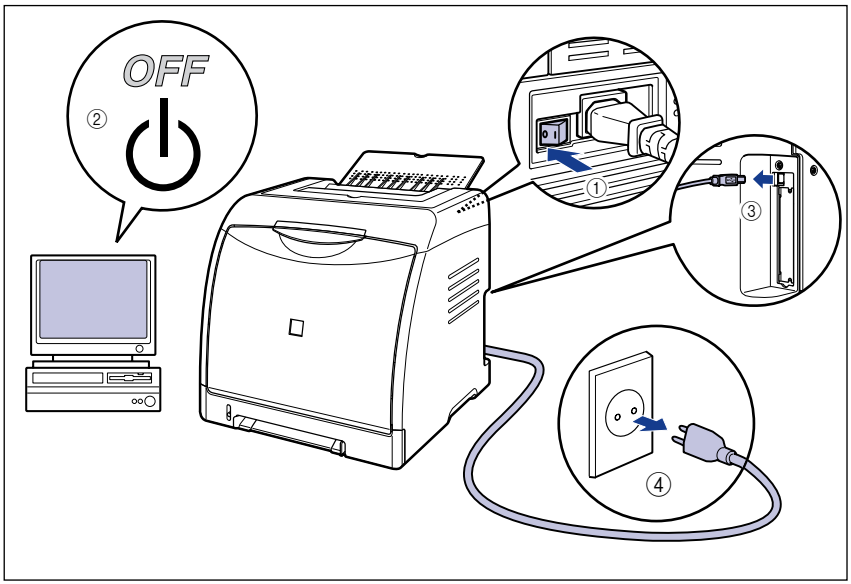

## 2 Remove all the interface cables and the power cord from the printer.

## 3 Close the output tray.

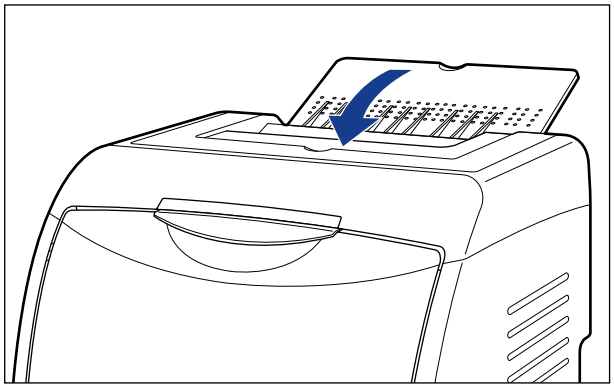

## 4 Pull out the paper cassette.

Pull out the paper cassette gently ①.

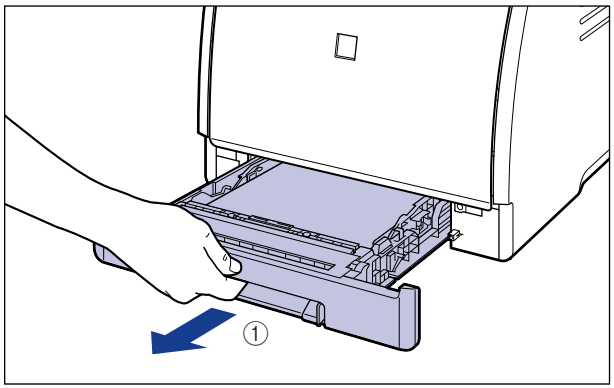

While holding the paper cassette with both hands, remove it from the printer unit as shown in the figure ②.

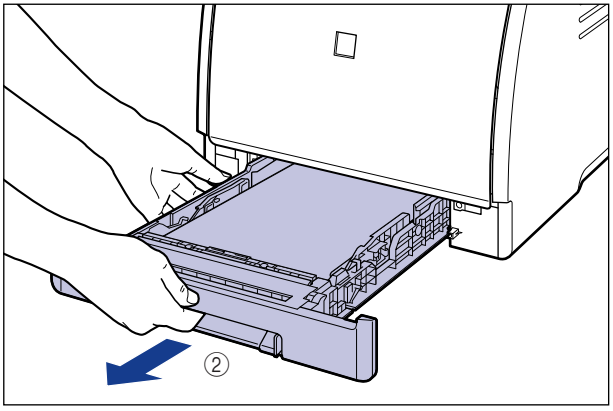


## 5 Remove the cassette protective cover.

Pressing the right side of the cassette protective cover ①, remove it ②.

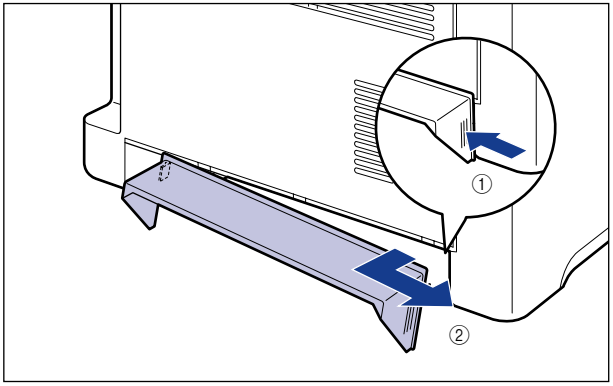

## 6 Move the printer unit from the installation site.

Carry the printer with 2 or more people by holding the center of the lift handles on the lower portion of the printer and lifting it up at the same time.

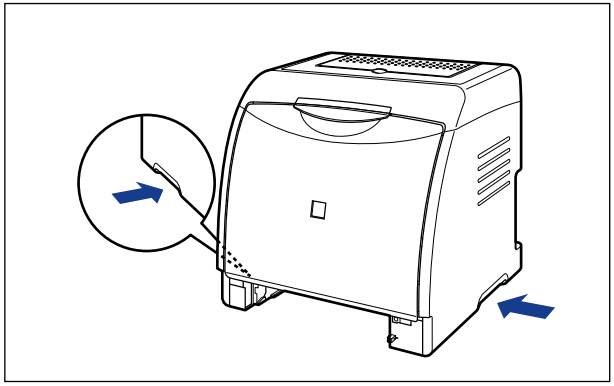

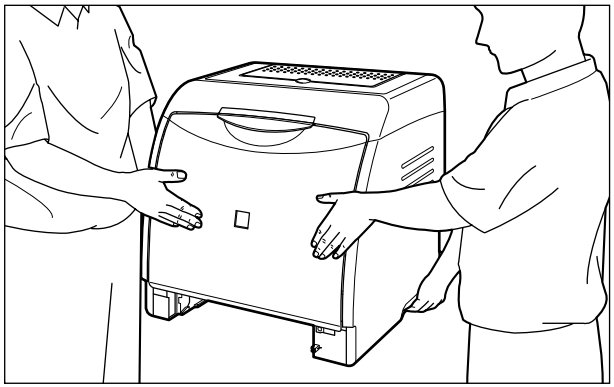

**CAUTION**

- **The printer weighs approximately 19.1 kg without the paper cassette and cassette protective cover installed. The printer must be carried by 2 or more people, and care must be taken to avoid hurting your back or other portions of your body when carrying the printer.**

- **Be sure not to hold the printer by the front panel, delivery slots, or any portions other than the lift handles. If you do so, you may drop the printer, resulting in personal injury.**

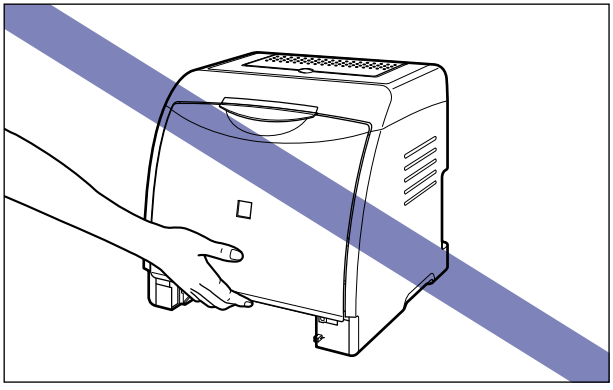

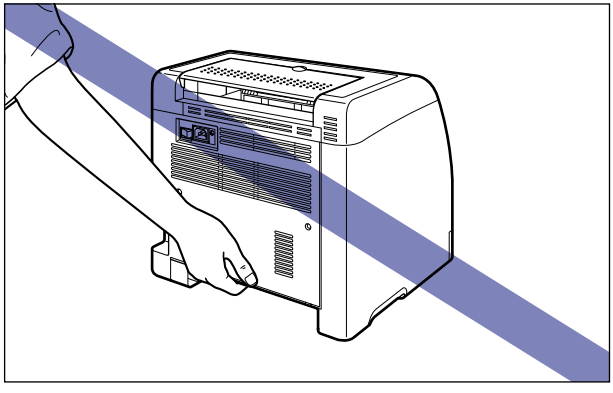

- **The front portion of the printer (A) is relatively heavy. Be careful not to get off-balanced when lifting the printer. If you do so, you may drop the printer, resulting in personal injury.**

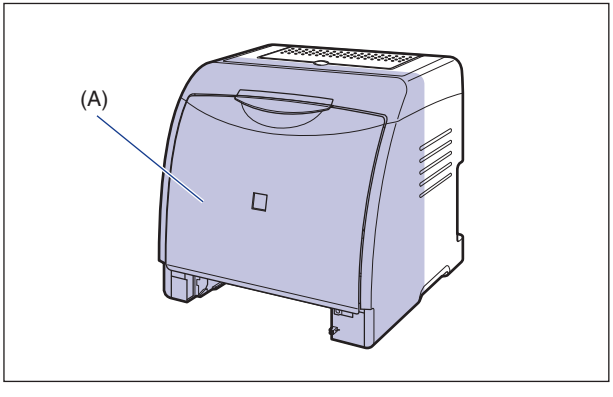

IMPORTANT

Make sure that the front cover and output tray are closed before carrying the printer.

## Removing the Packing Materials and Installing the Paper Feeder

The paper feeder is to be installed at the bottom of the printer unit.

**CAUTION**

- **Put the printer or paper feeder down slowly and carefully. Be careful not to hurt your hands.**
- **Do not carry the printer with the paper cassette attached. If you do so, the paper cassette may drop resulting in personal injury.**

IMPORTANT

- If there is any packing material remaining inside the paper feeder, this may result in misfeeds or damage to the printer when operating the printer. Be sure to remove all the packing materials following the procedure.
- The removed packing materials are required when transporting the printer for relocation or maintenance. Keep them where they will not get lost.

NOTE

The packing materials may be changed in form or position to be placed, or may be added or removed without notice.

### 1 Remove the tape that is securing the connector.

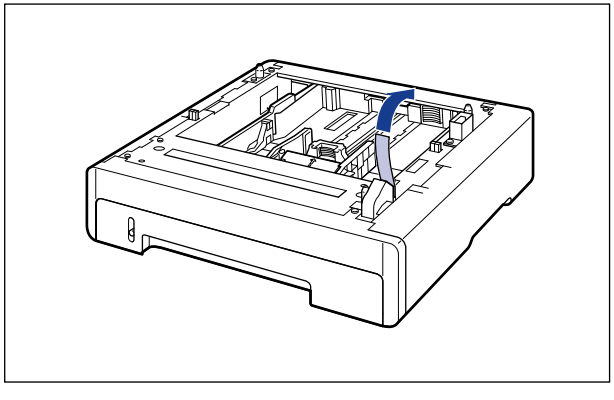

## 2 Pull out the paper cassette.

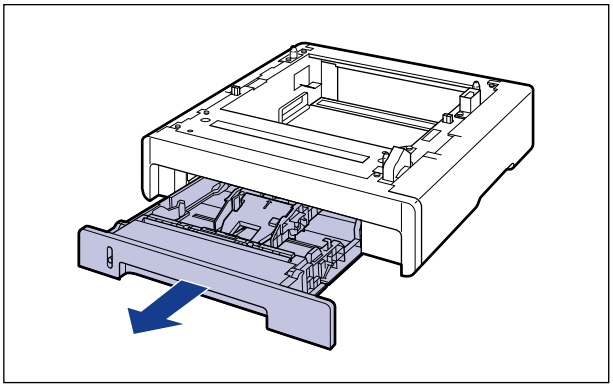

IMPORTANT

Do not touch the rubber pad (A) in the paper cassette. This may result in misfeeds.

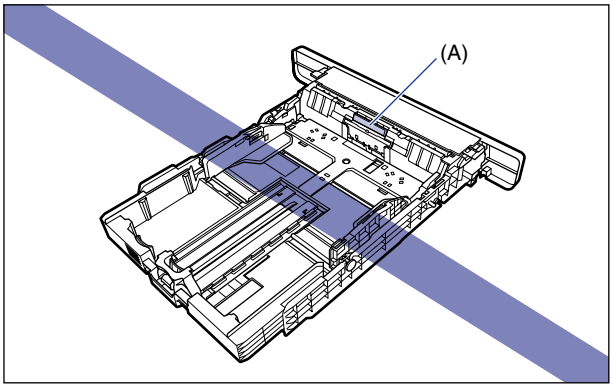

## 3 While holding the lock release lever of the side paper guides, slide the paper guides.

The side paper guides move together.

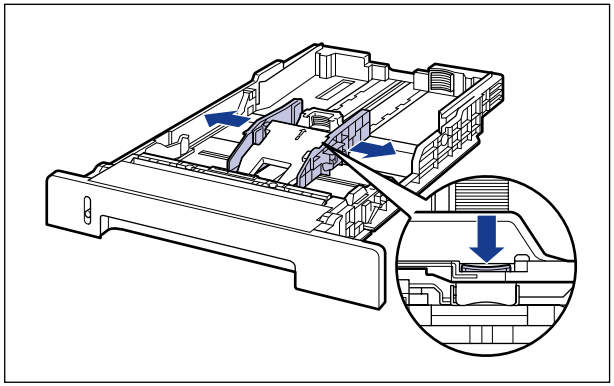

## 4 While holding the lock release lever of the rear paper guide, slide the paper guide.

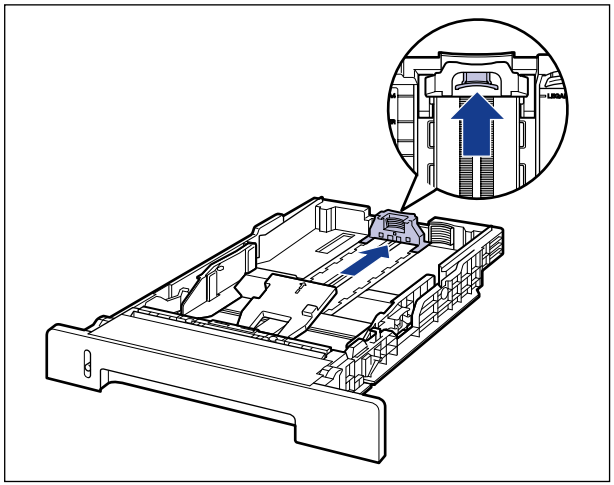

## 5 While pressing down the plate ①, remove the packing material ②.

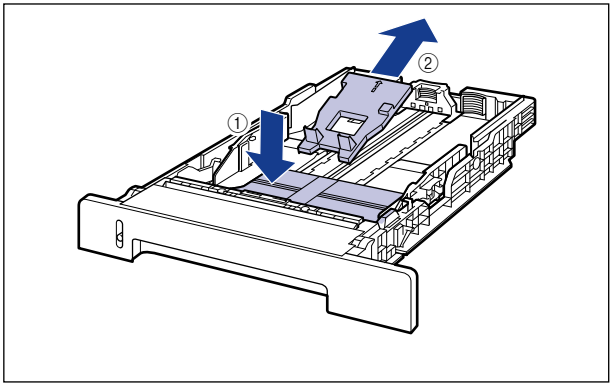


IMPORTANT

The paper cassette is provided with a packing material. Be sure to take out the paper cassette to remove the packing material.

## 6 Place the paper feeder at the installation site.

When carrying the paper feeder, hold the lift handles on both sides with both hands as shown in the figure.

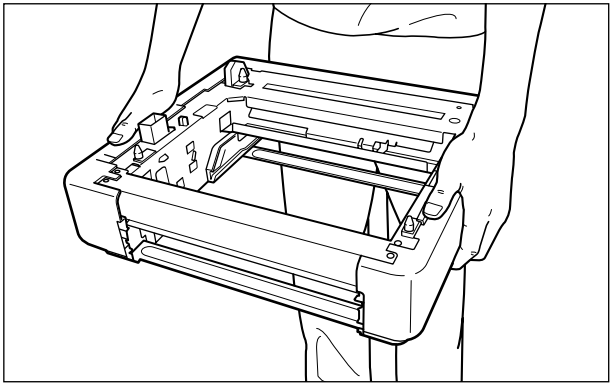

IMPORTANT

- Do not touch the connector (A) in the paper feeder. This may result in damage to the printer or misfeeds.

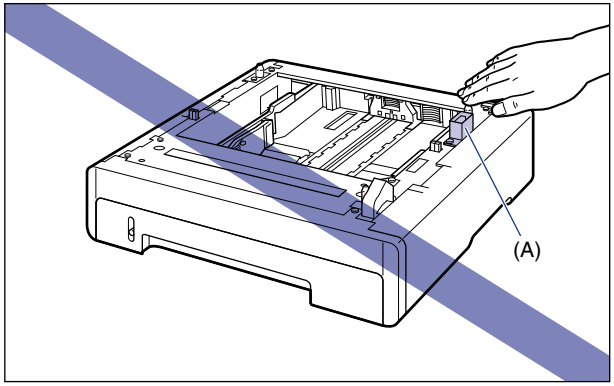


- Do not install the paper feeder on a platform that may warp from the weight of the printer and optional accessories, or where the printer is liable to sink (such as a carpet or mat).
- Secure sufficient space around the paper feeder so that you can install the printer and connect cords such as the power cord and interface cables.

## 7 When installing the printer unit on the paper feeder, gently set it down so that each surface of the printer unit is flush with the front or side surfaces of the paper feeder.

Also, match the positioning pins (A) and connector (B) when setting the printer unit.

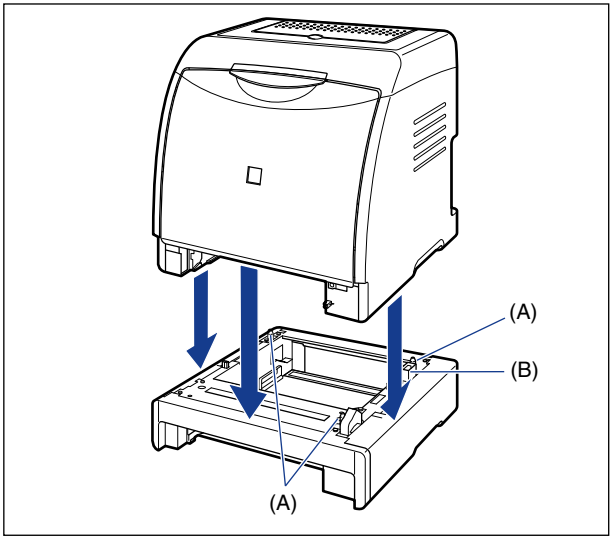


IMPORTANT

If the printer unit cannot be placed on the paper feeder properly, lift the printer unit once, hold it horizontally, and place it again. If you try to set the printer unit forcefully without lifting it, the connector and positioning pins may be broken.

## 8 Attach the cassette protective cover to the printer unit and paper feeder.

Install the left side of the cassette protective cover ① on the printer, then while pressing the right side of the cover ②, insert the cover into the back of the printer ③ as shown in the figure.

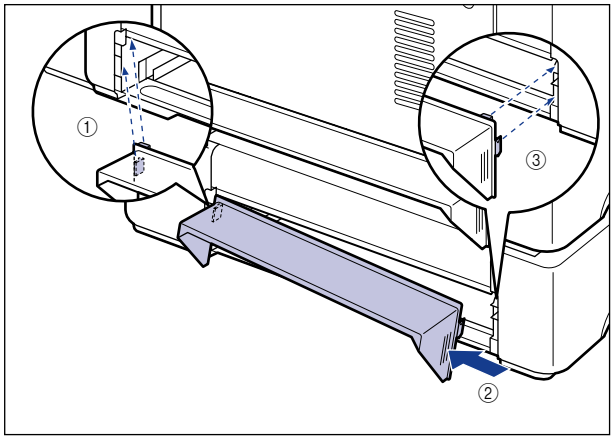


IMPORTANT

Do not put hands, press hard, or place objects on the cassette protective cover. This may damage to the cassette protective cover.

## 9 Set the paper cassette in the printer unit and paper feeder.

## 10 Open the output tray.

## 11 Connect the interface cables except for the USB cable, and connect the power cord.

## 12 Plug the power plug into the AC power outlet.

## 13 Connect the USB cable.

NOTE

After installing the paper feeder, you have to specify the settings for the optional accessories in the [Configuration]/[Device Settings] sheet in the printer driver. You can obtain the status of the optional accessories automatically by clicking [Get Device Status] in the [Configuration]/[Device Settings] sheet.

# Removing the Paper Feeder

Remove the paper feeder using the following procedure.

**WARNING**

**Be sure to turn the printer and computer OFF, unplug the power plug, and then disconnect all the interface cables and power cord from the printer before removing the paper feeder. Otherwise, the power cord or interface cables may be damaged, resulting in a fire or electrical shock.**

**CAUTION**

- **Do not carry the printer with the paper cassette attached. If you do so, the paper cassette may drop resulting in personal injury.**
- **Do not carry the printer with the paper feeder installed. If you do so, the paper feeder may drop resulting in personal injury.**

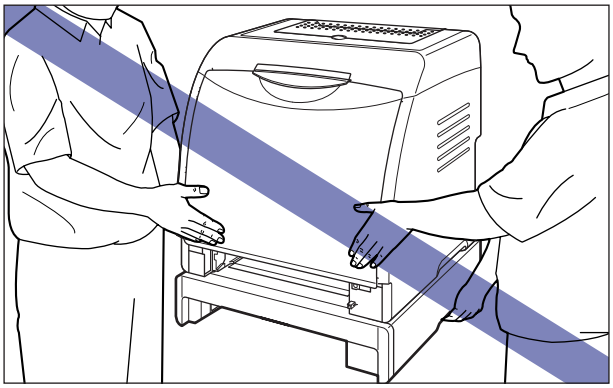

IMPORTANT

When moving or servicing the printer, remove the paper feeder and paper cassette.

1 Turn the printer OFF.

2 If a USB cable is connected, turn the computer off, and then disconnect the USB cable.

3 Disconnect the power plug from the AC power outlet.

4 Remove all the interface cables and the power cord from the printer.

5 Close the output tray.

6 Pull out the paper cassette from the printer unit and all the paper feeder.

7 Remove the cassette protective cover from the printer unit and paper feeder.

8 Lift the printer unit and remove it from the paper feeder.

9 Move the paper feeder.

10 Move back the printer unit to the installation site.

11 Install the cassette protective cover.

12 Set the paper cassette in the printer.

13 Open the output tray.

**14** **Connect the interface cables except for the USB cable, and connect the power cord.**

**15** **Plug the power plug into the AC power outlet.**

**16** **Connect the USB cable.**

# Network Board

Install the network board in the expansion slot located on the rear of the printer.

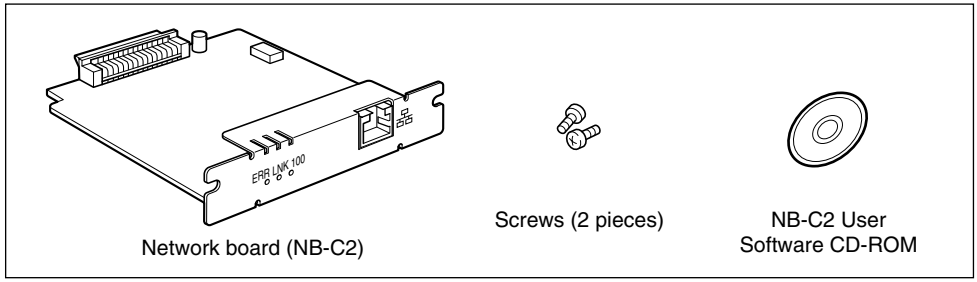


By installing the optional network board, you can use LBP5100 directly connected to a network.

■ **Connecting the printer directly to the computer**

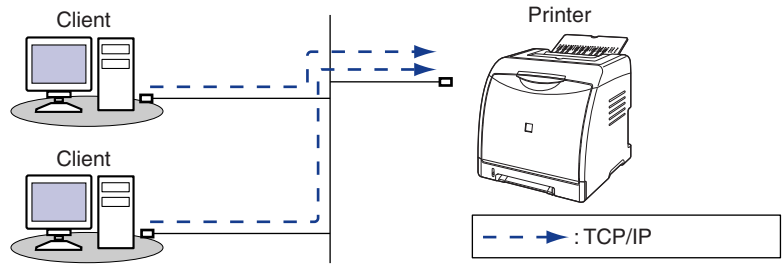


■ **Connecting the printer to the computer via a print server**

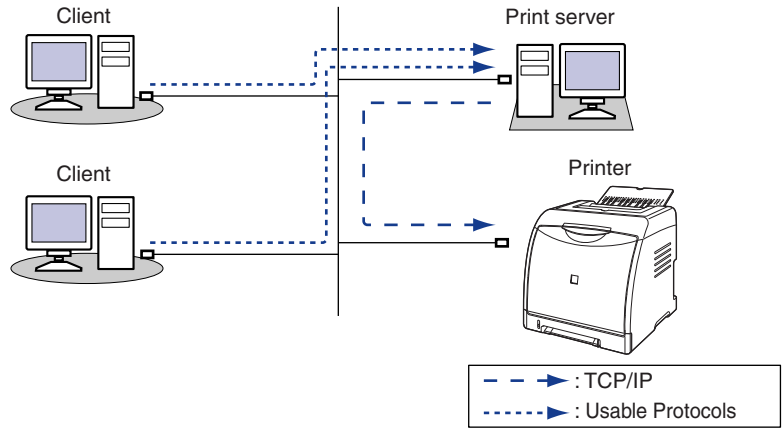

* If you connect this printer via a print server, you can use it as a network printer, which enables printing from other computers that are not directly connected to this printer.
If you connect this printer via a print server, you need to perform the following settings:

1. Installing the printer driver on the print server (See Network Guide)
2. Print Server Settings (See p. 4-56)
3. Installation on Clients (See p. 4-63)

**CAUTION**

- **Be sure to turn the printer OFF, unplug the power plug, and then disconnect all the interface cables and power cord from the printer before installing the network board. If a USB cable is connected, turn the computer off, and then remove the USB cable. If you attempt to install the network board when the printer is ON or any cable is connected to the printer, this may result in an electrical shock.**
- **Be careful when handling the network board. Touching the edges or a sharp portion of the network board may result in personal injury.**

IMPORTANT

The network board contains components that are sensitive to static electricity. Observe the following precautions when handling the network board to prevent damage from static electricity.

- Touch a metal object to dissipate static electricity before handling the network board.
- When handling the network board, do not touch anything that generates static electricity such as the computer display.
- Do not touch the network board parts, printed wire, or connectors with your hands.
- To prevent the network board from being affected by static electricity, keep it in the protective bag until it is ready to be installed. The protective bag is required after the network board is removed. Keep the protective bag and do not discard of it.

NOTE

This network board does not come with a LAN cable. A Category 5 twisted pair cable is required for installing the network board and connecting the printer to a network. Have cables or a hub ready as needed.

# Parts and Their Functions

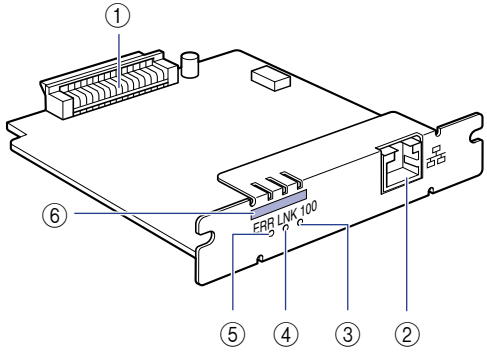


**① Printer Connector**

Connects to the printer. Do not touch the connector directly with your hands.

**② LAN Connector**

Connects to a 10BASE-T/100BASE-TX LAN cable.

**③ 100 Indicator (Green)**

Comes on when the network board is connected to the network by 100BASE-TX.
Does not come on when connected by 10BASE-T.

**④ LNK Indicator (Green)**

Comes on when the network board is connected to the network properly.

**⑤ ERR Indicator (Orange)**

Comes on or blinks when the network board is not working properly.

**⑥ MAC Address**

It is required when setting the IP address using the ARP/PING command. It may be also required when installing the printer driver.

# Installing the Network Board

Install the network board in the expansion slot of the printer using the following procedure. A Phillips screwdriver is required for installing the network board. Have a screwdriver ready in advance that matches the size of the screws.

## 1 Perform the following procedure.

Turn the printer OFF ①.
If a USB cable is connected, turn the computer off ②, and then disconnect the USB cable ③.
Disconnect the power plug from the AC power outlet ④.

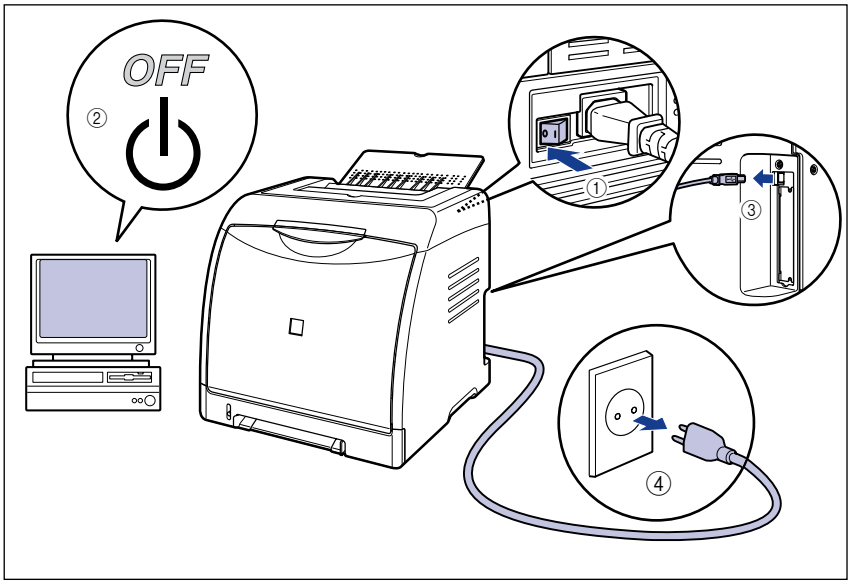


## 2 Remove the power cord.

If there is not enough space to install the network board, move the printer to a place where you can work easier.

## 3 Remove the screws and remove the protective plate for the expansion slot.

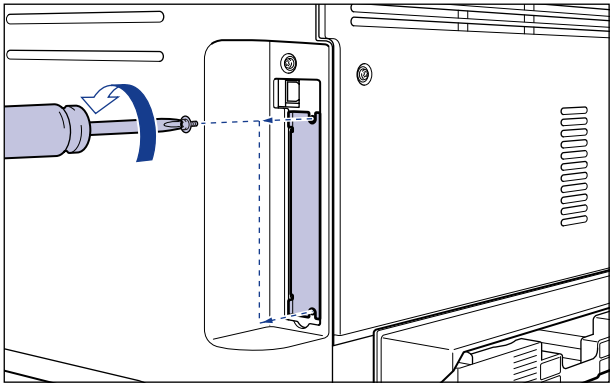

IMPORTANT

The removed protective plate and screws are required when the network board is removed. Keep them where they will not get lost.

## 4 Insert the network board into the expansion slot in the orientation shown in the figure.

Hold the metal panel portions of the network board and insert the board straight while aligning it with the guide rails inside the expansion slot.

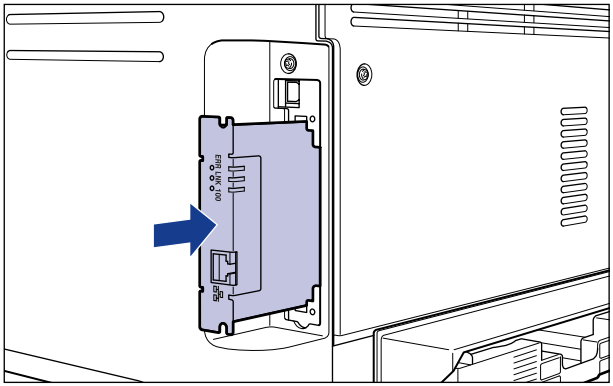


IMPORTANT

- Do not touch the network board parts, printed wire, or connectors with your hands.
- Insert the network board securely.

## 5 Secure the top and bottom portions of the network board with the two screws supplied with the network board.

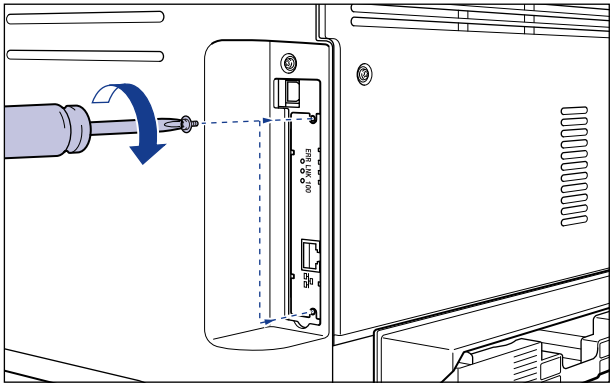

## 6 Connect the LAN cable.

Connect a LAN cable that is compatible with the LAN connector of the network board according to the network.

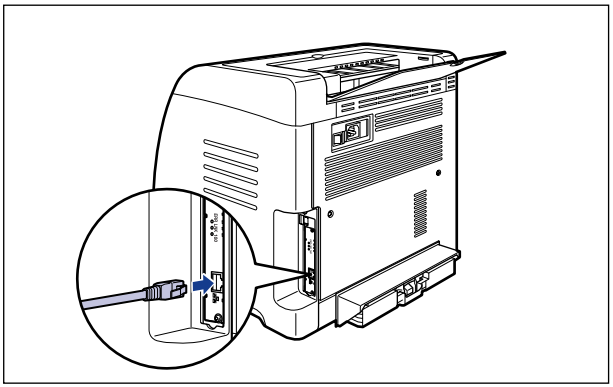

NOTE

This network board does not come with a LAN cable. A Category 5 twisted pair cable is required for installing the network board and connecting the printer to a network. Have cables or a hub ready as needed.

## 7 Connect the power cord.

## 8 Plug the power plug into the AC power outlet.

## 9 If you are going to print via USB also, connect the USB cable.

## 10 Press "|" of the power switch to turn the printer ON.

IMPORTANT

If the printer does not operate properly, or an error message appears in the Printer Status Window, see "Troubleshooting," on p. 7-1.

## 11 Make sure that the LNK indicator (green) on the network board is on.

If the network board is connected by 10BASE-T, the board is working properly when the LNK indicator is on.
If the network board is connected by 100BASE-TX, the board is working properly when the LNK indicator and 100 indicator are on.
((A): ERR Indicator (B): LNK Indicator (C): 100 Indicator)

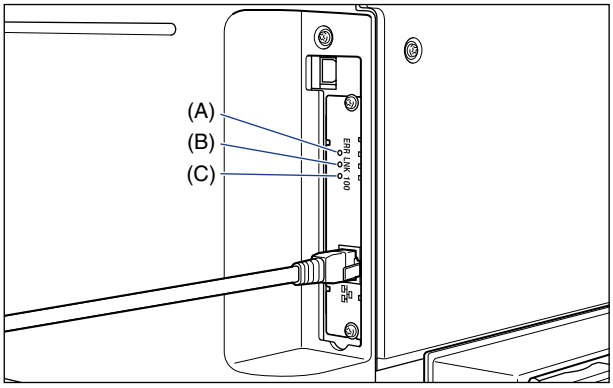


### ● If the network board is not working properly

❑ Turn the printer OFF, then check the LAN cable connection, hub performance, and network board installation.

# Setting the Network Board

The default value of the network board is set at "Auto detect". Usually, you do not need to change the setting, since the transmission speed and transfer mode of 10BASE-T/100BASE-TX are detected automatically. If the printer cannot communicate with other devices on the network, set the DIP switches on the network board. Before setting the DIP switches, turn the printer OFF, then remove the network board. A Phillips screwdriver is required for removing the network board. Have a screwdriver ready in advance that matches the size of the screws. Set the DIP switches according to the transmission speed of the connected network as follows.

IMPORTANT

When setting the DIP switches, be careful not to damage the main board with the tip of a ball-point pen etc. Do not use a sharp object such as a mechanical pencil.

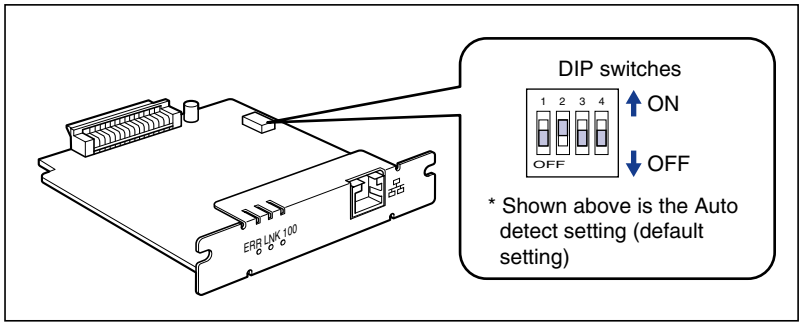

## ■ Setting the Network Transmission Speed/Transfer Mode and the DIP Switches

| Communication speed and Transmission mode of LAN | DIP switch setting |
|---|---|
| Auto detect (default setting) | 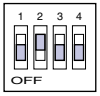 ON / OFF |
| 10BASE-T/Half-duplex | 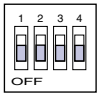 ON / OFF |
| 10BASE-T/Full-duplex | 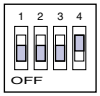 ON / OFF |
| 100BASE-TX/Half-duplex | ON / OFF |
| 100BASE-TX/Full-duplex | 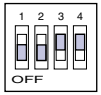 ON / OFF |

**1** **Turn the printer OFF.**

**2** **If a USB cable is connected, turn the computer off, and then disconnect the USB cable.**

**3** **Disconnect the power plug from the AC power outlet.**

**4** **Remove all the interface cables and the power cord from the printer.**

**5** **Remove the two screws and remove the network board.**

IMPORTANT

Do not touch the network board parts, printed wire, or connectors with your hands.

## 6 Set the DIP switches.

Set the DIP switches with the tip of a ball-point pen etc. For details on methods for setting the DIP switches, see the table of p. 8-26.

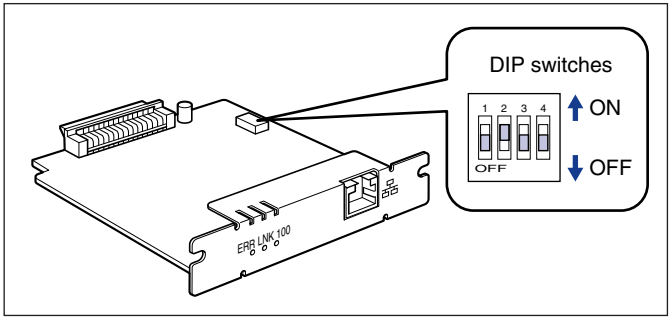


IMPORTANT

When setting the DIP switches, be careful not to damage the main board with the tip of a ball-point pen etc. Do not use a sharp object such as a mechanical pencil.

## 7 Insert the network board into the expansion slot.

Hold the metal panel portions of the network board and insert the board straight while aligning it with the guide rails inside the expansion slot.

IMPORTANT

- Do not touch the network board parts, printed wire, or connectors with your hands.
- Insert the network board securely.

**8** **Secure the top and bottom portions of the network board with the two screws supplied with the network board.**

**9** **Connect the LAN cable.**

**10** **Connect the power cord.**

**11** **Plug the power plug into the AC power outlet.**

**12** **If you are going to print via USB also, connect the USB cable.**

## Resetting the Network Board

If you want to reset the network board to the default values, use the Remote UI or FTP Client. For details on the Remote UI, see "Chapter 3 Various Functions of the Remote UI" in Remote UI Guide, and on FTP Client, see "Chapter 5 Appendix" in Network Guide.

Even if none of the above procedures work, you can reset the settings for the network board by manipulating the DIP switches using the following procedure. A Phillips screwdriver is required to reset the settings for the network board. Have a screwdriver ready in advance that matches the size of the screws.

## 1 Turn the printer OFF.

## 2 If a USB cable is connected, turn the computer off, and then disconnect the USB cable.

## 3 Disconnect the power plug from the AC power outlet.

## 4 Remove all the interface cables and the power cord from the printer.

## 5 Remove the two screws and remove the network board.

IMPORTANT

Do not touch the network board parts, printed wire, or connectors with your hands.

## 6 Switch the DIP switch 1 to ON.

Set the DIP switches with the tip of a ball-point pen etc.

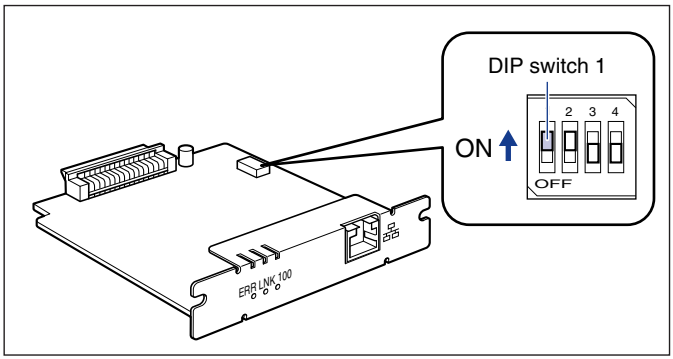


IMPORTANT

When setting the DIP switches, be careful not to damage the main board with the tip of a ball-point pen etc. Do not use a sharp object such as a mechanical pencil.

## 7 Insert the network board into the expansion slot.

Hold the metal panel portions of the network board and insert the board straight while aligning it with the guide rails inside the expansion slot.

IMPORTANT

- Do not touch the network board parts, printed wire, or connectors with your hands.
- Insert the network board securely.

**8** **Secure the top and bottom portions of the network board with the two screws supplied with the network board.**

**9** **Connect the power cord.**

**10** **Plug the power plug into the AC power outlet.**

**11** **Press "|" of the power switch to turn the printer ON, wait until the ◯ (Ready) indicator comes on, and then press "○" of the power switch to turn the printer OFF.**

**12** **Disconnect the power plug from the AC power outlet.**

**13** **Remove the power cord.**

**14** **Remove the network board, then reset the DIP switch 1 to OFF.**

Set the DIP switches with the tip of a ball-point pen etc.

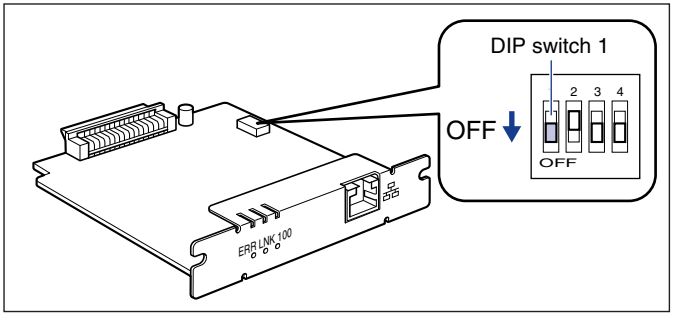


IMPORTANT

When setting the DIP switches, be careful not to damage the main board with the tip of a ball-point pen etc. Do not use a sharp object such as a mechanical pencil.

**15** **Install the network board.**

**16** **Connect the interface cables except for the USB cable, and connect the power cord.**

**17** **Plug the power plug into the AC power outlet.**

**18** **If you are going to print via USB also, connect the USB cable as needed.**

## Removing the Network Board

Remove the network board using the following procedure. Have ready the protective plate and screws for the expansion slot removed when the network board was installed.

**CAUTION**

- **Be sure to turn the printer and computer OFF and disconnect all the interface cables and power cord from the printer before removing the network board. If a USB cable is connected, turn the computer off, and then remove the USB cable. If you attempt to remove the network board when the printer is ON or any cable is connected to the printer, this may result in an electrical shock.**
- **Be careful when handling the network board. Touching the edges or a sharp portion of the network board may result in personal injury.**

**1** **Turn the printer OFF.**

**2** **If a USB cable is connected, turn the computer off, and then disconnect the USB cable.**

**3** **Disconnect the power plug from the AC power outlet.**

**4** **Remove all the interface cables and the power cord from the printer.**

**5** **Remove the two screws and remove the network board.**

Store the network board in the protective bag that it came in.

IMPORTANT

- Do not touch the network board parts, printed wire, or connectors with your hands.
- The removed two screws are required when the network board is installed. Keep them where they will not get lost.

**6** **Attach the protective plate to the expansion slot and secure it with the screws.**

**7** **Connect the interface cables except for the USB cable, and connect the power cord.**

**8** **Plug the power plug into the AC power outlet.**

**9** **Connect the USB cable.**

# Appendix

9
CHAPTER

This chapter describes the printer specifications and index.


Specifications . . . . . 9-2
- Hardware Specifications . . . . . 9-2
- Software Specifications . . . . . 9-4

Dimensions of Each Part . . . . . 9-5

About Color Printing . . . . . 9-7
- The Three Primary Colors of Light and Color . . . . . 9-7
- Method for Expressing Color . . . . . 9-8
- About Color Printing . . . . . 9-9
- Achieving More Beautiful Color Printing . . . . . 9-10

NetSpot Device Installer . . . . . 9-12

Print Monitor Installer . . . . . 9-13

Windows Firewall . . . . . 9-14
- Configuring Windows Firewall to Unblock Communication with the Client Computers . . . . . 9-15
- Configuring Windows Firewall to Block Communication with the Client Computers . . . . . 9-17
- Configuring Windows Firewall to Unblock Communication with the Print Server . . . . . 9-19

Index . . . . . 9-20

Location of the Serial Number . . . . . 9-25

# Specifications

## Hardware Specifications

| | | |
|---|---|---|
| **Type** | | Desktop Page Printer |
| **Printing method** | | Electrophoto Method (On-demand fixing) |
| **Print speed (60 to 90 g/m$^2$)** | | When printing A4 continuously<br>Black and white printing: 12 pages/min.<br>Color printing: 10 pages/min.<br>* Print speed may drop in stages depending on the paper size, paper type, print copies, and the settings of the fixing mode. (This is because the safety function that prevents damage caused by heat becomes active.) |
| **Warm-up time (20 °C (68 °F))** | | 0 second from standby mode (15 seconds or less from power ON)*<br>* 245 seconds or less immediately after the toner cartridges are replaced |
| **First print time** | | When printing A4<br>Approx. 20 seconds or less<br>* May vary depending on the output environment. |
| **Paper size** | **Cassette 1** | A4, B5, A5, Legal, Letter, Executive, Statement, Foolscap, 16K, Envelope DL, Envelope COM10, Envelope C5, Envelope Monarch, Envelope B5, Index Card, Custom Paper Size (width 76.2 to 215.9 mm, length 127.0 to 355.6 mm)<br>Paper capacity: approx. 250 sheets (64 g/m$^2$) |
| | **Cassette 2 (Optional)** | |
| | **Manual feed slot** | A4, B5, A5, Legal, Letter, Executive, Statement, Foolscap, 16K, Envelope DL, Envelope COM10, Envelope C5, Envelope Monarch, Envelope B5, Index Card, Custom Paper Size (width 76.2 to 215.9 mm, length 127.0 to 355.6 mm)<br>Paper capacity: 1 sheet |
| **Automatic 2-sided printing** | | A4, Legal, Letter, Foolscap |
| **Paper output** | | Face-down |
| **Output capacity** | | Output tray: approx. 125 sheets (64 g/m$^2$) |

| | | |
|---|---|---|
| **Noise (Declared noise emission in accordance with ISO 9296)** | | Lwad (declared A-weighted sound power level (1B = 10dB))<br>During standby: Background noise level<br>During operation: 6.6 B or less<br>Sound pressure level (Bystander position)<br>During standby: Background noise level<br>During operation: 50 dB (A) or less |
| **Operating environment (Printer unit only)** | | Operating environment temperature: 10 to 30 °C (50 to 86 °F)<br>Humidity: 10 to 80 % RH (no condensation) |
| **Host interface** | | USB interface<br>- Windows 98/Me: USB Full-Speed (USB1.1 equivalent)<br>- Windows 2000/XP/Server 2003: USB 2.0 Hi-Speed/USB Full-Speed (USB1.1 equivalent) |
| **User interface** | | 8 LED indicators |
| **Expansion slot** | | 1 |
| **Power supply** | | 110 - 127 V (± 10 %) 50/60 Hz (± 2 Hz)<br>220 - 240 V (± 10 %) 50/60 Hz (± 2 Hz) |
| **Power consumption (at temperature of 20 °C (68 °F))** | | 110 - 127 V<br>Average during operation: approx. 340 W<br>Average during standby: approx. 16 W<br>Average during the sleep mode: approx. 7 W<br>Maximum: 790 W or less<br>220 - 240 V<br>Average during operation: approx. 340 W<br>Average during standby: approx. 16 W<br>Average during the sleep mode: approx. 8 W<br>Maximum: 840 W or less |
| **Consumables** | **Toner cartridge** | - Canon Cartridge 707 Black<br>Printable pages: approx. 2,500 pages*<br>* Canon Genuine Cartridge, and for A4 or Letter size paper at 5 % page coverage with the default print density setting |
| | | - Canon Cartridge 707 Yellow<br>- Canon Cartridge 707 Magenta<br>- Canon Cartridge 707 Cyan<br>Printable pages: approx. 2,000 pages*<br>* Canon Genuine Cartridge, and for A4 or Letter size paper at 5 % page coverage with the default print density setting |

| | | |
|---|---|---|
| **Weight** | **Printer unit and included parts** | Printer unit (excluding the toner cartridges) ... approx. 18 kg<br>Toner cartridge (each) ..... approx. 0.6 kg |
| | **Consumables and optional accessories** | Toner cartridge (each)<br>(Canon Genuine Cartridge)..... approx. 0.6 kg*<br>Paper Feeder Unit PF-92<br>(including the cassette) ..... approx. 3.7 kg<br>* When the toner cartridges are one of the following Canon Genuine Cartridges:<br>Cartridge 707 Black<br>Cartridge 707 Yellow<br>Cartridge 707 Magenta<br>Cartridge 707 Cyan |

## Software Specifications

| | |
|---|---|
| **Printing software** | CAPT (Canon Advanced Printing Technology) |
| **Printable area** | Data cannot be printed within a 5.0 mm margin on all sides of the paper. (10 mm for envelopes)<br>* The data may be printed with the edges missing when a document with no margins is printed, even if the [Print with Upper Left of Sheet as Starting Point] check box in the [Finishing Details] dialog box in the [Finishing] sheet is selected. In this case, specify the scaling factor in the printer driver to print smaller so that any data on the document will not miss, and then print again. Depending on the print data to be printed, however, optimum print quality may not be obtained if the [Print with Upper Left of Sheet as Starting Point] check box is selected. |

# Dimensions of Each Part

## ■ Printer unit

• Standard state

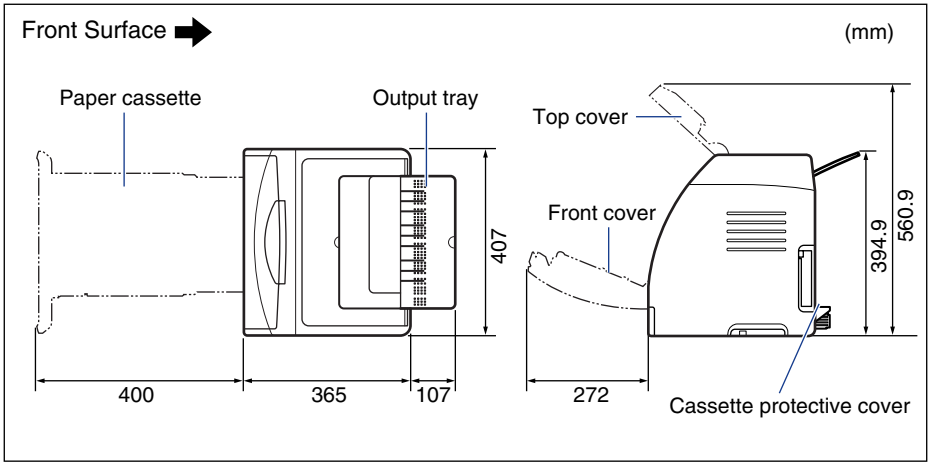


• State with the paper feeder installed

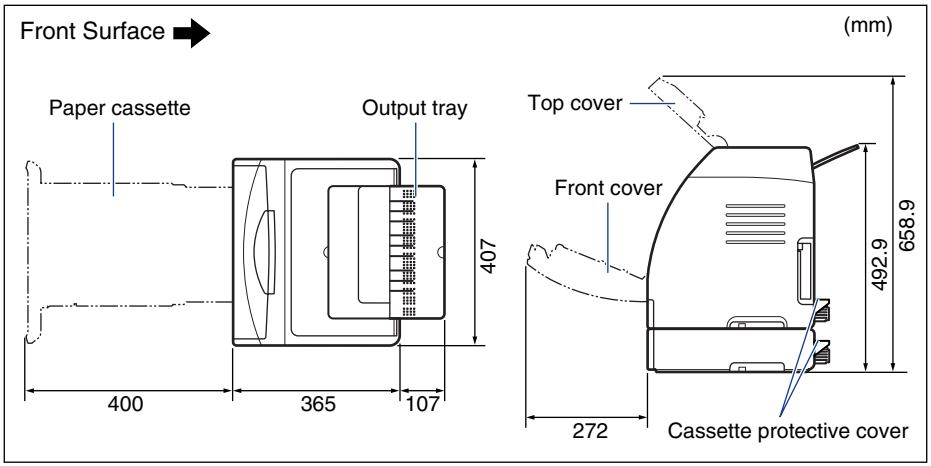

## ■ PAPER FEEDER PF-92

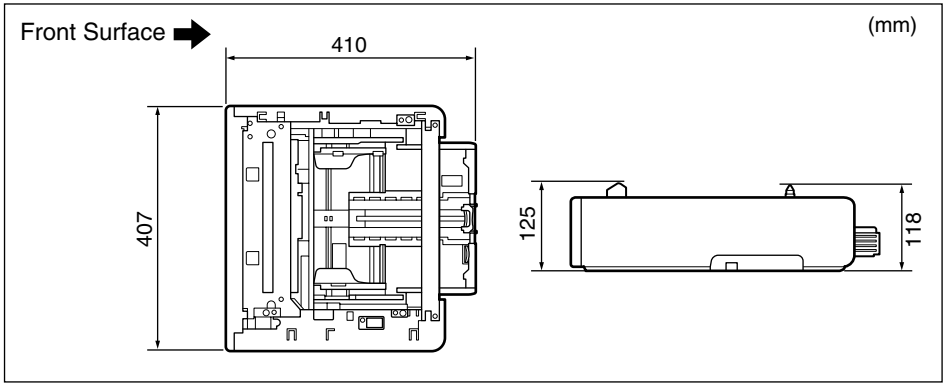

# About Color Printing

This section describes the fundamentals of colors and the way this printer reproduces colors.

## The Three Primary Colors of Light and Color

The colors that you see on a computer screen are reproduced from the three basic colors red, green and blue. The 3 primary colors of light, which are red, green and blue, can be combined to give white (additive color mixing).

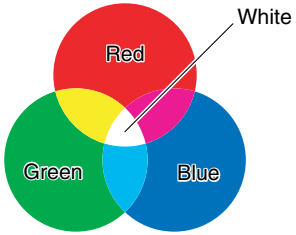


A color printer, however, does not use the 3 primary colors of light, but uses the same 3 primary colors as used in paintings to reproduce colors. If the 3 primary colors of paint, C (cyan), M (magenta) and Y (yellow) are mixed together, the resulting color is black (subtractive color mixing).

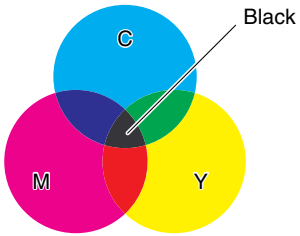

The three primary colors of light and color are thus in a complementary color relationship.
The red in light and cyan in color, green in light and magenta in color, and blue in light and yellow in color complement one another.

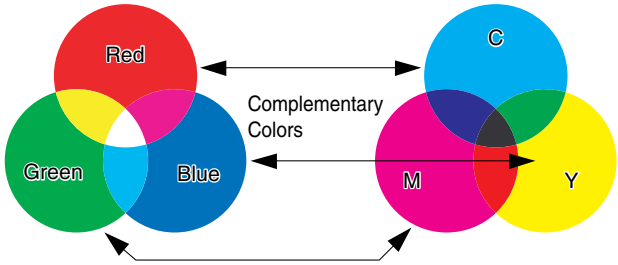


## Method for Expressing Color

Creating colors for painting involves mixing the colors on a palette to get a match. In a computer display and printer, it is not possible to mix colors to match in the same way as paints, so colors are reproduced by groups of colored dots.

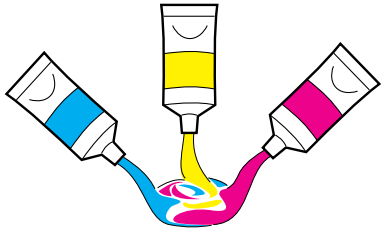

Paints

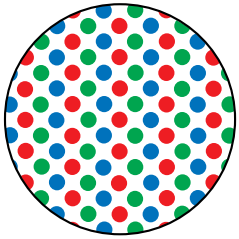

On a Monitor or Printer

On the computer display, various colors are reproduced by the intensity of three red, green, and blue dots.

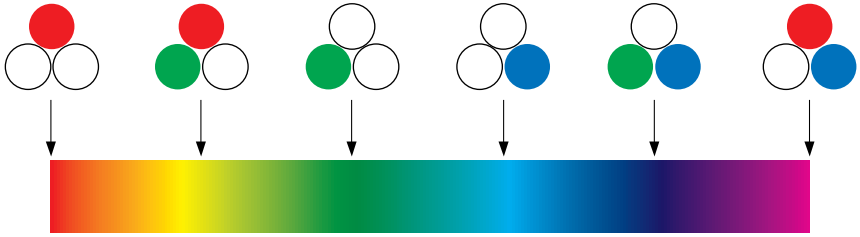

Color Bar

In the case of a printer, it is not possible to change the intensity of toner colors. Because of this, a much larger number of dots are used compared to a computer display, and various colors are reproduced by adding K (black) to the C (cyan), M (magenta) and Y (yellow). This means that higher resolution color prints are possible the smaller these dots are.

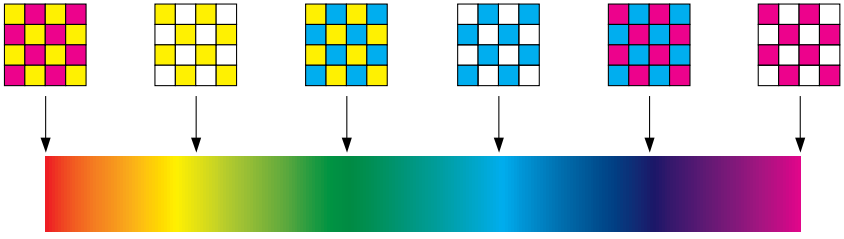

Color Bar

## About Color Printing

A color printer expresses the shape and color of images in groups of minute C (Cyan), M (Magenta), Y (Yellow), and K (Black) dots.
Therefore, image data input to the printer is divided into cyan, magenta, yellow, and black.

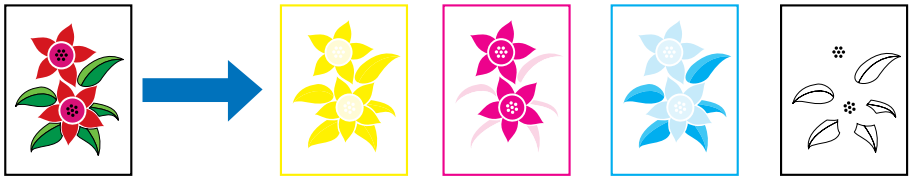

Y M C K

The data is reproduced separately by each toner cartridge, and the toner is transferred one after another.

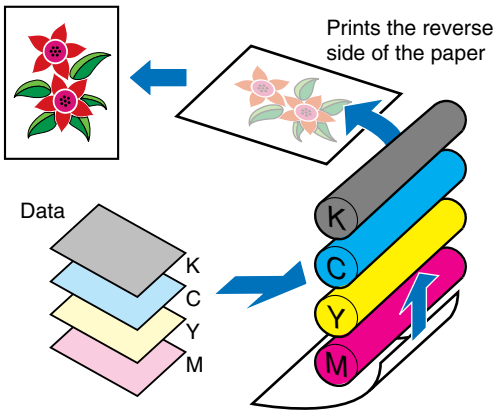

The data for all four colors is then transferred onto paper, and the paper passes through the fixing unit and is output.

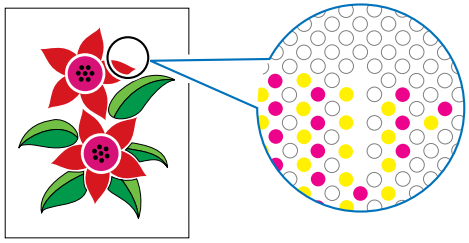

## Achieving More Beautiful Color Printing

If the color in the print are not as expected, or the image quality is low, or the printout takes a long time, the printer performance is halved. By making minor adjustments and taking a little bit of care, we can make sure we get 100% out of the printer.

### ■ Adjusting the color on the display

Colors that you can see on the computer display are not limited to true colors. If we perform a color print based on the colors we can see on the computer display with the aim of matching those colors, the printed colors will be a little different.
Use the color samples or color adjustment tools that come with the application software to adjust the displayed colors to the colors that are actually printed.

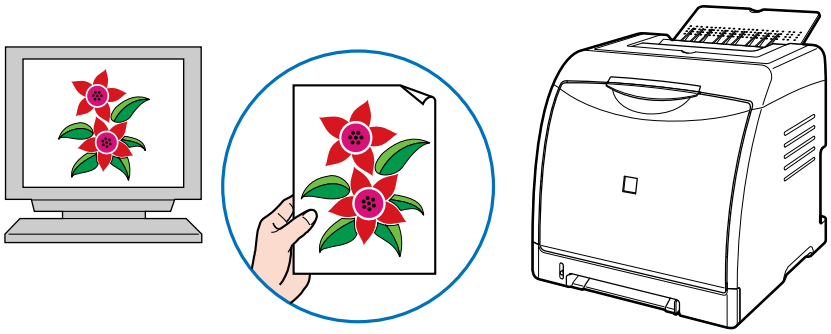

## ■ Adjusting the resolution

It does not matter how high the resolution of printing data is, you cannot get better picture quality than the resolution of the printer. A resolution of 600 dpi at printer sizes is sufficient. If the resolution of print data is too high, print processing will take a large amount of time, and the data size will also grow. Conversely, if the data resolution is too low, you cannot achieve sufficient image quality.
Check the dimensions and resolution of print data using an image processing application, and set the resolution to 300 dpi or 200 dpi.

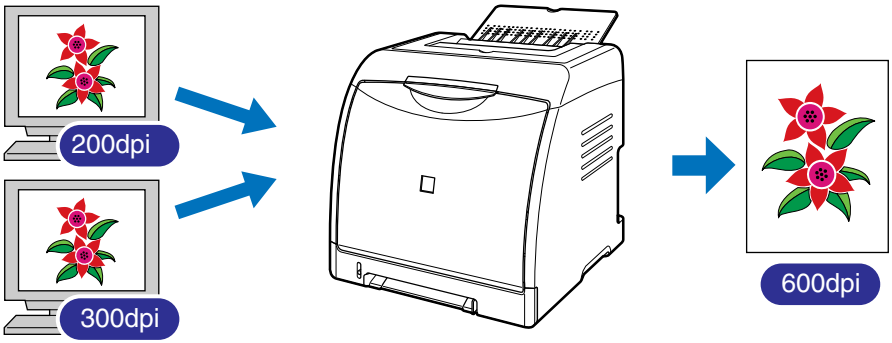


## ■ Using the toner save mode for confirming the text and layout

When checking the contents or layout of a document, print in the toner save mode if you want to check the text or positions.

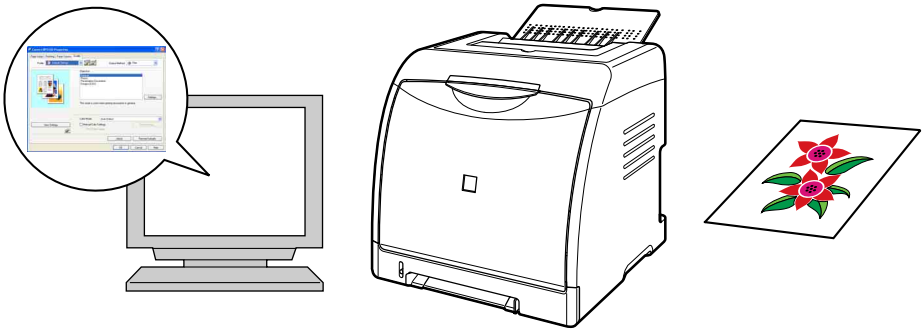

NOTE

For details on specifying the toner save mode, see "[Quality] Sheet," on p. 5-37.

# NetSpot Device Installer

The supplied CD-ROM includes the "NetSpot Device Installer", which is a utility that can initialize the settings of a printer connected to the network. The NetSpot Device Installer is software that allows you to easily initialize the settings of printers connected to the network.

For more details on NetSpot Device Installer, see "Network Guide".

NOTE

When the printer driver is installed from CD-ROM Setup, the initial settings for the network are performed automatically. Use "NetSpot Device Installer" as needed when you want to reset the IP address manually without using CD-ROM Setup.

# Print Monitor Installer

The supplied CD-ROM includes "Print Monitor Installer" that creates a port (Canon CAPT Port) for connecting your computer to the printer on a TCP/IP network, as well as the printing software (CAPT).
For details on Canon CAPT Port, see "Network Guide".

NOTE

When the printer driver is installed from CD-ROM Setup, the following port is created automatically depending on the operating system of the computer on which the printer driver is installed.

- Windows 2000/XP/Server 2003: Standard TCP/IP Port
- Windows 98/Me: Canon CAPT Port

Use "Print Monitor Installer" as needed such as when you want to create a port (Canon CAPT Port) without using CD-ROM Setup.

# Windows Firewall

Windows Firewall is a feature of Windows XP Service Pack 2 and other operating systems that protects your computer by blocking unauthorized access over the network.

Because of this, you need to configure Windows Firewall to unblock communication if you are using the printer with an operating system that is equipped with Windows Firewall.

The following settings are required on the print server (the computer to which the printer is directly connected) and client computers (the computers that use the printer via the network).

| | Setting | See |
|---|---|---|
| **Print server** | ■ **When installing CAPT Software from CD-ROM Setup**<br>The [Warning] dialog box appears during the installation. Click [Yes] to configure Windows Firewall to unblock communication with the client computers.<br> <br> | See p. 4-5 |
| | ■ **When installing CAPT Software from [Add Printer Wizard] or [Windows Explorer]**<br>Configure Windows Firewall to unblock communication with the client computers using "CAPT Windows Firewall Utility". | See p. 9-15 |
| **Clients** | Configure Windows Firewall to unblock communication with the print server. | See p. 9-19 |

IMPORTANT

If you want to copy "CAPT Windows Firewall Utility" to your hard disk to run it, copy all of the files (CNAC6FW.EXE, CAPTRGFW.DLL, CNAC6FW.INI) from the [WF_UTIL] folder on the supplied "LBP5100 User Software" CD-ROM to your hard disk.

# Configuring Windows Firewall to Unblock Communication with the Client Computers

**1** **Insert the supplied "LBP5100 User Software" CD-ROM into the CD-ROM drive.**

If CD-ROM Setup appears, click [Exit].

**2** **From the [Start] menu, select [My Computer], right-click the CD-ROM icon, and then select [Open] from the pop-up menu.**

**3** **Double-click [English] → [WF_UTIL] → [CNAC6FW.EXE].**

[CAPT Windows Firewall Utility] runs.

IMPORTANT

You can also run the utility by selecting [Run] from the [Start] menu, entering "D:\English\WF_UTIL\CNAC6FW.EXE", and then clicking [OK]. (The CD-ROM drive name is indicated as "D:" in this manual. The CD-ROM drive name may differ depending on the computer you are using.)

**4** **Click [Unblock].**

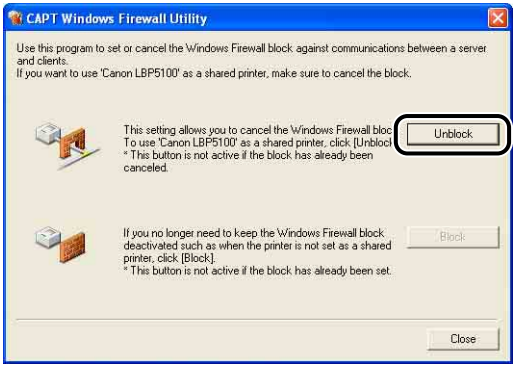


NOTE

You cannot click [Unblock] if the firewall is already configured to unblock communication with client computers.

## 5 Click [OK].

NOTE

To check if the Windows Firewall block has been properly cleared, select [Control Panel] from the [Start] menu, then click [Network and Internet Connections] → [Windows Firewall].
Make sure that the [Canon LBP5100 RPC Server Process] check box is selected in the [Exceptions] sheet in the [Windows Firewall] dialog box.

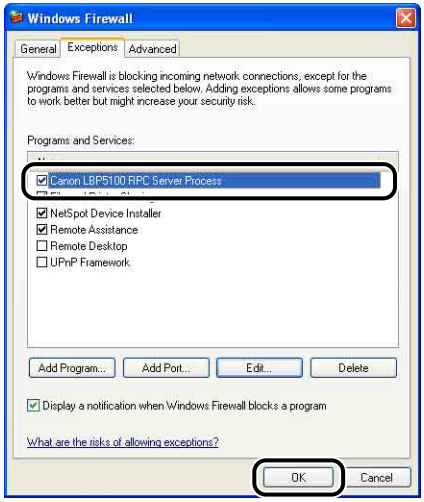


Windows Firewall is now configured to unblock communication with client computers.

# Configuring Windows Firewall to Block Communication with the Client Computers

**1** **Insert the supplied "LBP5100 User Software" CD-ROM into the CD-ROM drive.**

If CD-ROM Setup appears, click [Exit].

**2** **From the [Start] menu, select [My Computer], right-click the CD-ROM icon, and then select [Open] from the pop-up menu.**

**3** **Double-click [English] → [WF_UTIL] → [CNAC6FW.EXE].**

[CAPT Windows Firewall Utility] runs.

IMPORTANT

You can also run the utility by selecting [Run] from the [Start] menu, entering "D:\English\WF_UTIL\CNAC6FW.EXE", and then clicking [OK]. (The CD-ROM drive name is indicated as "D:" in this manual. The CD-ROM drive name may differ depending on the computer you are using.)

**4** **Click [Block].**

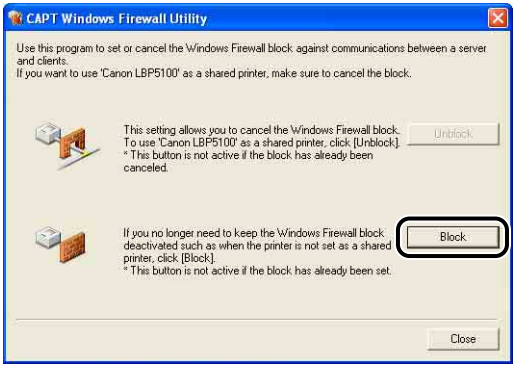


NOTE

You cannot click [Block] if Windows Firewall is already configured to block communication with client computers.

## 5 Click [OK].

Windows Firewall is now configured to block communication with the client computers.

# Configuring Windows Firewall to Unblock Communication with the Print Server

IMPORTANT

If you do not perform the following settings on the client computers, the printer status may not be displayed properly in the Printer Status Window, and some of the printer functions may not operate properly.

**1** **From the [Start] menu, select [Control Panel].**

**2** **Click [Network and Internet Connections], then click [Windows Firewall].**

**3** **In the [Exceptions] sheet in the [Windows Firewall] dialog box, select the [File and Printer Sharing] check box, and then click [OK].**

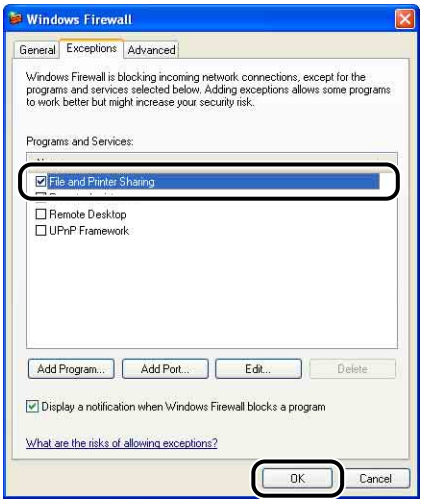


Windows Firewall is configured to unblock communication with the print server.

# Index

## Numerics

100 Indicator (Green), 8-20
2-sided Printing, 3-72

## A

Add Printer Wizard
  Windows 2000, 4-39
  Windows 98/Me, 4-45
  Windows XP/Server 2003, 4-32
Administrators Permission, 4-14, 4-19, 4-32, 4-39
Advanced Settings, 5-36
Alarm Indicator, 1-10

## B

Binding Location, 5-31
Borders, 5-55
Brightness, 5-69

## C

C (Cyan) Toner Cartridge Slot, 1-9
Calibration, 6-16
Canon CAPT Print Monitor, 9-13
Canon Printer Uninstaller, 4-50, 4-51
CAPT (Canon Advanced Printing Technology), 4-4
Cassette Protective Cover, 1-8
CD-ROM, 1-4
Cleaning
  Fixing Roller, 6-22
  Outside of the Printer, 6-26
  Static Charge Eliminator, 6-24
Client, 4-55, 4-63
[Color Adjustment] Sheet, 5-40
Color Mode, 5-38
Color Settings, 5-40
[Configuration]/[Device Settings] Sheet, 5-42
Contrast, 5-69
Copies, 5-26
Custom Installation, 4-4
Custom Paper Size, 5-27
Custom Settings, 5-38

## D

Deleting/Pausing/Resuming a Print Job, 5-16
Detailed Settings, 5-33
Detailed Settings for Booklet, 5-32
Dimensions, 9-5
Document Properties
  Windows 2000/XP/Server 2003, 5-9, 5-11, 5-25
  Windows 98/Me, 5-13, 5-25
Download Installation, 4-55, 4-63

## E

Easy Installation, 4-4
Edit and Preview, 5-76
Edit Watermark, 5-28
Enable Image Correction, 5-64
Envelope, 3-5
ERR Indicator (Orange), 8-20
ETB (Electro static Transfer Belt)
  Unit, 1-9
Expansion Slot, 1-8

## F

Finishing, 5-32

Finishing Details, 5-34
[Finishing] Sheet, 5-31
Firewall, 9-14
Fixing Roller, 6-22
Foot Positions, 2-6
Format Settings, 5-30
Front Cover, 1-8

## G

Get Device Status, 5-43
Gutter, 5-32, 5-59
Gutter Settings, 5-33

## H

Heavy Paper, 3-4

## I

Important Safety Instructions, xviii
Index Card, 3-4
Indicators, 1-7
Installation
  Manuals, 5-85
  Printer Driver, 4-4
Installation Environment, 2-3
Installation on Clients, 4-63
Installation Problems, 7-39
Installation Requirements, 2-4
Installation Site, 2-3
Installation Space, 2-5

## K

K (Black) Toner Cartridge Slot, 1-9

## L

Label, 3-4
LAN
  Cable, 2-33
  Connector, 8-20
Laser Beam, xxii
Lift Handles, 1-7, 1-8
LNK Indicator (Green), 8-20
Load Paper Indicator, 1-10
Loading Paper
  Custom Paper Size, 3-51
  Envelopes, 3-40
  Heavy Paper, 3-17
  Index Card, 3-29
  Label, 3-17
  Plain Paper, 3-17
  Transparencies, 3-17
Local Installation, 4-55
Local Printer, 4-33, 4-40, 4-46

## M

M (Magenta) Toner Cartridge Slot, 1-9
MAC Address, 8-20
Manual Color Settings, 5-38, 5-67
Manual Feed Slot, 1-8, 3-13
Manual Scaling, 5-27
Manuals, 5-85
[Matching] Sheet, 5-41
Miscellaneous Problems, 7-54

## N

NB-C2, 8-18
NetSpot Device Installer, 9-12
Network Board, 1-12, 8-18
  Initialization, 8-28
  Installation, 8-21
  Parts and Functions, 8-20
  Removal, 8-31
  Setting the DIP Switches, 8-25
Network Environment, 2-33, 4-55

## O

Objective, 5-38
Online Help, 5-79
Online Manuals, 5-85
Optional Accessories, 1-11
Options
  Network Board, 1-12
  Paper Feeder, 1-11
Orientation, 5-26, 5-63
Output Size, 5-26
Output Tray, 1-7
  Output Tray, 3-15
  Paper Capacity, 3-16

## P

Page Layout, 5-27
Page Options, 5-30
Page Order, 5-27
[Page Setup] Sheet, 5-26
Page Size, 5-26
PageComposer, 5-78
Paper
  Printable Area, 3-6
  Storage, 3-8
  Storing Printouts, 3-9
Paper Alignment, 5-31
Paper Cassette, 1-7, 3-13
Paper Feeder, 1-11, 8-2
  Installation, 8-8
  Removal, 8-15
Paper Guides, 1-8
Paper Jam Indicator, 1-10
Paper Jams, 7-3
Paper Output Method, 5-60
Paper Selection, 5-37
Paper Size, 3-2
  Abbreviations of Paper Sizes, 3-6
  List, 3-2
Paper Source, 3-10, 5-37
  Paper Capacity, 3-11
  Precautions for Handling, 3-13
  Selection, 3-12
  Type, 3-10
Paper Source Options, 5-43
[Paper Source] Sheet, 5-36
Paper Type, 5-37
Paper Type List, 3-3
Parts and Their Functions, 1-7
Peripheral Space Required, 2-5
Plain Paper, 3-4
Plug and Play
  Windows 2000, 4-18
  Windows 98/Me, 4-23
  Windows XP/Server 2003, 4-13
Poster Printing, 5-52
Power Socket, 1-8
Power Supply
  Turning the Printer OFF, 2-37
  Turning the Printer ON, 2-36
Power Supply Requirements, 2-4
Power Switch, 1-8
Preview, 5-46
Print Color Sample, 5-38, 5-71
Print in Different Orientations, 5-31
Print Monitor Installer, 9-13
Print on the Other Side, 5-37
Print Server, 4-56
Print Server Settings, 4-56
Print Style, 5-57
Printer
  Cleaning, 6-26
  Handling, 6-38
  Moving, 6-29
  Parts and Their Functions, 1-7
  Setting Printer Information, 5-3
Printer Connector, 8-20
Printer Driver
  Installation, 4-4
  Uninstallation, 4-76
Printer Name, 4-30, 4-36, 4-42, 4-48
Printer Properties
  Windows 2000/XP/Server 2003, 5-12, 5-25
  Windows 98/Me, 5-15, 5-25
Printer Sharing Settings
  Windows 2000/XP/Server 2003, 4-58
Printer Status Window
  Consumables/Counters Menu, 5-95
  Deleting/Pausing/Resuming a Print Job, 5-16
  Device Settings Menu, 5-96

Display, 5-92
Displaying Printer Status When Using a Print Server, 5-98
Parts and Functions, 5-90
Preferences Menu, 5-94
Refresh, 5-97
Resolve Error, 5-97
Utility Menu, 5-96
Printing, 3-29, 3-40, 3-51, 3-65, 3-72, 5-5
Printing Date, 5-55
Printing Multiple Pages on One Sheet, 5-48
Printing Preferences, 5-9
Problems
Installation, 7-39
Others, 7-54
Paper, 7-37
Paper Jams, 7-3
Print Quality, 7-25
Service Error Display, 7-21
Profile
Add/Edit, 5-45
Allow Profile Selection, 5-44
Allow Setting Edition, 5-44
Comment, 5-44
Define Document Property, 5-44
Delete, 5-44
Export, 5-44
Import, 5-44
Name, 5-43
Profile List, 5-43
[Profile] Sheet, 5-43
Profiles
Specifying Profiles, 5-72

## Q

[Quality] Sheet, 5-37

## R

Rating Label, 1-8
Ready Indicator (Green), 1-10

## S

Scaling, 5-50
Self-diagnostic Test, 2-36
Serial Number, 9-25
Service Error Display, 7-21
Settings, 5-38
Shared Printer, 4-55
Show Icon in the Taskbar, 5-43
Sleep Mode, 2-38
Specifications, 9-2
Hardware, 9-2
Software, 9-4
Spooling at Host, 5-43
Static Charge Eliminator Cleaner, 1-9
System Requirements, 4-2

## T

Temperature/Humidity Conditions, 2-3
Toner Cartridges
Message, 6-2
Precautions for Handling, 6-13
Replacement, 6-2
Storage, 6-15
Toner Density, 5-66
Toner Indicator, 1-10
Top Cover, 1-7
Transparency, 3-4
Troubleshooting Map, 7-2

## U

Ultrasonic Humidifier, 2-3
Uninstallation
Manuals, 5-88
Printer Driver, 4-76
Unusable Paper, 3-7
Usable Paper, 3-2
USB
Cable, 2-31
Class Driver, 4-10, 4-27
Connector, 1-8

## V

Ventilation Slots, 1-7, 1-8
View Settings, 5-44

## W

Watermark, 5-27, 5-53
Windows Firewall, 9-14

## Y

Y (Yellow) Toner Cartridge Slot, 1-9

# Location of the Serial Number

The serial number is required for receiving maintenance service. The serial number for this printer is indicated at the location shown in the following figure.

IMPORTANT

The label on which the serial number is indicated is required for service or maintenance. Be sure not to remove them.

## ■ Inside of the Printer

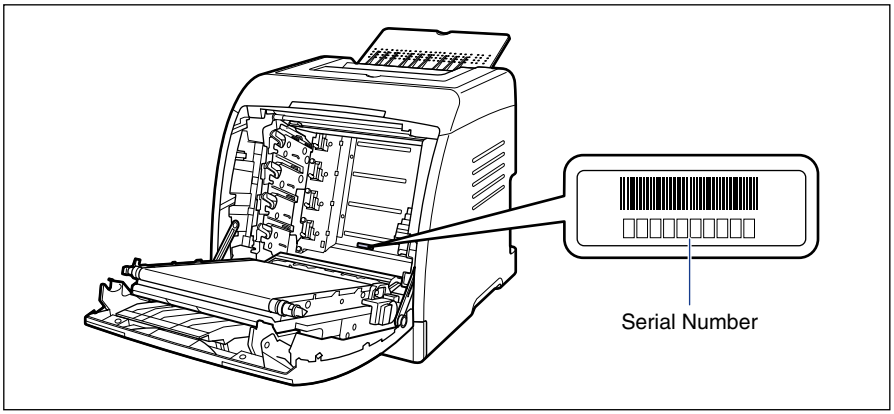


## ■ Outside View of the Packaging Box

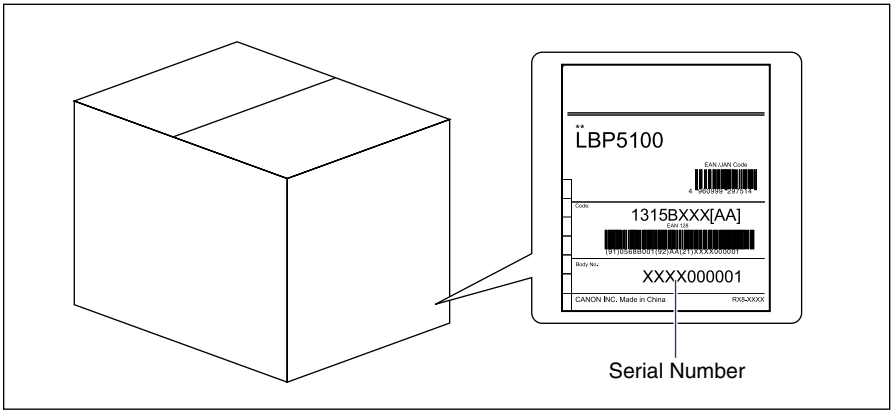

**CANON INC.**
30-2, Shimomaruko 3-chome, Ohta-ku, Tokyo 146-8501, Japan
**CANON U.S.A., INC.**
One Canon Plaza, Lake Success, NY 11042, U.S.A.
**CANON CANADA INC.**
6390 Dixie Road Mississauga, Ontario L5T 1P7, Canada
**CANON EUROPA N.V.**
Bovenkerkerweg 59-61 1185 XB Amstelveen, The Netherlands
**CANON FRANCE S.A.S.**
17, quai du Président Paul Doumer 92414 Courbevoie Cedex, France
**CANON COMMUNICATION & IMAGE FRANCE S.A.S.**
12, rue de l'Industrie 92414 Courbevoie Cedex, France
**CANON (U.K.) LTD.**
Woodhatch, Reigate, Surrey, RH2 8BF, United Kingdom
**CANON DEUTSCHLAND GmbH**
Europark Fichtenhain A10, 47807 Krefeld, Germany
**CANON ITALIA S.p.A.**
Via Milano, 8 20097 San Donato Milanese (MI) Italy
**CANON LATIN AMERICA, INC.**
703 Waterford Way Suite 400 Miami, Florida 33126 U.S.A.
**CANON AUSTRALIA PTY. LTD**
1 Thomas Holt Drive, North Ryde, Sydney, N.S.W. 2113, Australia
**CANON CHINA CO., LTD**
15F Jinbao Building No.89 Jinbao Street, Dongcheng District, Beijing 100005, China
**CANON SINGAPORE PTE. LTD.**
1 HarbourFront Avenue #04-01 Keppel Bay Tower, Singapore 098632

USRM1-1126 (00)
© CANON INC. 2007