Canon

LASER SHOT

Laser Beam Printer

LASER SHOT LBP3200

Automatic Image Refinement

CAPT Canon Advanced Printing Technology

User's Guide

IMPORTANT:

Read this manual carefully before using your printer.
Save this manual for future reference.

ENG

LBP3200
Laser Printer
User's Guide

Manuals for the Printer

The manuals for this printer are divided as follows. Please refer to them for detailed information.

Guides with this symbol are PDF manuals included on the accompanying CD-ROM.

- **Installation**
- **Connecting to a Computer**
- **Printing Methods**

Getting Started Guide

- **Basic Operations**
- **Troubleshooting**

User's Guide (This Manual)

- To view the manual in PDF format, Adobe Reader/Adobe Acrobat Reader is required. If Adobe Reader/Adobe Acrobat Reader is not installed on your system, please download it from the Adobe Systems Incorporated website.
- The printer illustration on the cover may differ slightly from your printer.

How This Manual Is Organized

Chapter 1 Before You Start Using This Printer

Chapter 2 Loading and Delivering Paper

Chapter 3 Setting Up the Printing Environment

Chapter 4 Printing a Document

Chapter 5 Routine Maintenance

Chapter 6 Troubleshooting

Chapter 7 Appendix

Considerable effort has been made to ensure that this manual is free of inaccuracies and omissions. However, as we are constantly improving our products, if you need an exact specification, please contact Canon.

Contents

Preface . . . . . **vii**
How To Use This Manual . . . . . **vii**
Symbols Used in This Manual vii
Buttons Used in This Manual vii
Illustrations Used in This Manual viii
Displays Used in This Manual viii
Abbreviations Used in This Manual ix
Legal Notices . . . . . **x**
FCC (Federal Communications Commission) x
EMC Directive (220 - 240 V model) xi
Laser Safety (120 V/220 - 240 V models). xii
International Energy Star-Program xiii
Trademarks. xiii
Copyright xiii
Disclaimers. xiv
Legal Limitations on the Usage of Your Product and the Use of Images xiv
Important Safety Instructions . . . . . **xv**
Installation xv
Power Supply xvi
Handling xvii
Maintenance and Inspections xix
Consumables xx

Chapter 1 Before You Start Using This Printer

Features and Benefits **1-2**
Parts and Their Functions **1-4**
Front View. 1-5
Rear View 1-6
Internal View. 1-7
Plugging the Power Cord **1-8**
Turning the Printer ON/OFF **1-11**
Turning the Printer ON 1-11
Turning the Printer OFF 1-12
Connecting to a Computer **1-13**

Chapter 2 Loading and Delivering Paper

Paper Requirements 2-2
Usable Paper 2-2
Paper Size 2-2
Paper Type 2-3
Abbreviation of Paper Size. 2-5
Printable Area 2-6
Unusable Paper 2-7
Storing Paper 2-8
Paper Source 2-9
Paper Source Type. 2-9
Paper Capacity for Paper Source. 2-10
Paper Delivery Area. 2-11
Paper Delivery Area Type 2-11
Face-down Delivery Area. 2-11
Face-up Delivery Slot 2-12
Paper Capacity for Paper Delivery Area 2-12
Selecting the Paper Delivery Area 2-13
Switching into the Face-up Delivery Slot 2-13
Switching into the Face-down Delivery Area 2-13
Printing on Plain Paper / Heavy Paper / Label / Transparency 2-14
Loading Paper 2-14
Loading Paper in the Cassette 2-15
Setting Paper in the Manual Feed Slot. 2-21
Setting Printer Driver and Printing 2-23
Printing on Envelope. 2-27
Loading Envelope 2-27
Loading Envelope in the Cassette 2-28
Setting Envelope in the Manual Feed Slot 2-35
Setting Printer Driver and Printing 2-37
Printing on Custom Paper 2-40
Loading Custom Paper 2-40
Setting Printer Driver and Printing 2-43

Chapter 3 Setting Up the Printing Environment

Introduction 3-2
After Installing the Printer 3-2
Steps for Printing to be Followed Each Time 3-2
Required System Environment 3-2
Installing the CAPT Software 3-4
For Windows 98/Me 3-4
Installing from the CD-ROM 3-4
Installing with Plug and Play 3-8

For Windows 2000 3-16
Installing from the CD-ROM 3-16
Installing with Plug and Play. 3-18
For Windows XP. 3-22
Installing from the CD-ROM 3-22
Installing with Plug and Play. 3-24
After Completing Installation (Canon LBP3200 Group) 3-28
Printing a Test Page 3-32
Using the Printer on a Network 3-35
Setting the Print Server 3-36
For Windows 98/Me 3-36
For Windows 2000/XP 3-40
Installation on the Clients 3-45
Installing from [Add Printer Wizard] 3-45
Installing from [Windows Explorer]. 3-47
Uninstalling the CAPT Software 3-49

Chapter 4 Printing a Document

Printing from an Application. 4-2
Canceling a Print Job 4-6
Specifying the Printing Preferences 4-7
For Windows 98/Me 4-7
Displaying the [Document Properties] Dialog Box from the Application. . . . 4-7
Displaying the [Printer Properties] Dialog Box from the [Printers] Folder . . . 4-9
For Windows 2000/XP 4-10
Displaying the [Document Properties] Dialog Box from the Application. . . 4-11
Displaying the [Document Properties] Dialog Box from the [Printers] Folder . . 4-12
Displaying the [Printer Properties] Dialog Box from the [Printers] Folder . . 4-14
Using the Printing Functions 4-16
For Windows 98/Me 4-16
[Page Setup] Sheet 4-17
[Finishing] Sheet. 4-20
[Quality] Sheet 4-21
[General] Sheet 4-22
[Details] Sheet 4-22
[Sharing] Sheet. 4-23
For Windows 2000/XP 4-23
[Page Setup] Sheet 4-24
[Finishing] Sheet. 4-27
[Quality] Sheet 4-28
[General] Sheet 4-29
[Sharing] Sheet. 4-30
[Ports] Sheet. 4-30
[Advanced] Sheet 4-31

[Security] Sheet 4-31
[Paper Selection] Sheet 4-32
Printing Multiple Pages on One Sheet 4-32
Scaling Print Output 4-33
Scaling a Document Automatically 4-34
Scaling a Document Manually 4-35
Specifying a Custom Paper Size 4-36
Specifying the Print Quality 4-41
Specifying the Toner Density 4-42
Specifying the Image Refinement 4-43
Viewing the Printer Settings / Restoring the Default Settings 4-44
Viewing the Printer Settings 4-44
Restoring the Default Settings 4-45
Printer Status Window 4-46
Using the Printer Status Window 4-46
Displaying the Printer Status Window 4-47
Closing the Printer Status Window 4-48
Setting Preferences 4-48
Network Printer Status 4-50

Chapter 5 Routine Maintenance

Replacing the Toner Cartridge 5-2
Before Replacing the Toner Cartridge 5-2
Replacing the Toner Cartridge 5-6
Cleaning 5-12
Precautions for Handling the Toner Cartridge 5-13
Storing the Toner Cartridge 5-15
Cleaning the Printer 5-16
Moving the Printer 5-18
Moving the Printer 5-19
Handling the Printer 5-22
Precautions for Handling the Printer 5-22
Precaution for Storing the Printer 5-23

Chapter 6 Troubleshooting

When You Have Trouble Printing 6-2
Paper Jams 6-3
Service Error Display 6-14
When a Fixing Unit Error Appears 6-15
When a Scanner Error or Service Error Appears 6-16
Print Quality Problems 6-17
When Nothing is Printed 6-21

Installation Problems **6-22**
When Uninstallation Fails 6-23
Uninstalling the USB Class Driver 6-24
Installing by Selecting the USB Port (Windows 98/Me Only) 6-27
Problems During Network Installation 6-31
Miscellaneous Problems **6-32**

Chapter 7 Appendix

Specifications **7-2**
Hardware Specifications 7-2
Software Specifications 7-3
Dimensions of Each Part **7-4**
Optional Accessories **7-5**
Network Adapter 7-5
NetSpot Device Installer **7-7**
Index **7-8**
Location of the Serial Number **7-11**

Preface

Thank you for purchasing the Canon LASER SHOT LBP3200.

Please read this manual thoroughly before operating the printer in order to familiarize yourself with its capabilities, and to make the most of its many functions.

After reading this manual, store it in a safe place for future reference.

How To Use This Manual

Symbols Used in This Manual

The following symbols are used in this manual to explain procedures, restrictions, handling precautions, and instructions that should be observed for safety.

WARNING	Indicates a warning concerning operations that may lead to death or injury to persons if not performed correctly. In order to use the printer safely, always pay attention to these warnings.
CAUTION	Indicates a caution concerning operations that may lead to injury to persons, or damage to property if not performed correctly. In order to use the printer safely, always pay attention to these cautions.
IMPORTANT	Indicates operational requirements and restrictions. Be sure to read these items carefully in order to operate the printer correctly, and to avoid damage to the printer.
NOTE	Indicates a clarification of an operation, or contains additional explanations for a procedure. Reading these notes is highly recommended.

Buttons Used in This Manual

The following button names are a few examples of how buttons to be pressed are expressed in this manual:

- Buttons on Computer Operation Screens: [Button Name]

  Example: [OK]

  [Details]

Illustrations Used in This Manual

Illustrations used in this manual are for the 220 V model unless otherwise specified. For the 120 V model, a cover is attached to the face-down delivery area.

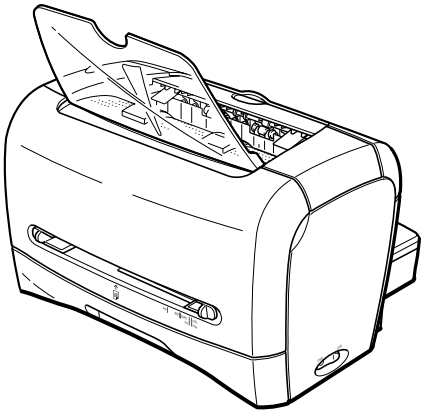

Displays Used in This Manual

Screen shots of the computer operation screen used in this manual are those taken when the LASER SHOT LBP3200 has operated for Windows 2000.

The buttons which you should press are marked with a ⬭ as shown below.

When multiple buttons can be pressed on the screen shot of computer operation screen, all buttons are marked. Select the button which suits your needs.

5 **Click [Install a Printer Driver].**

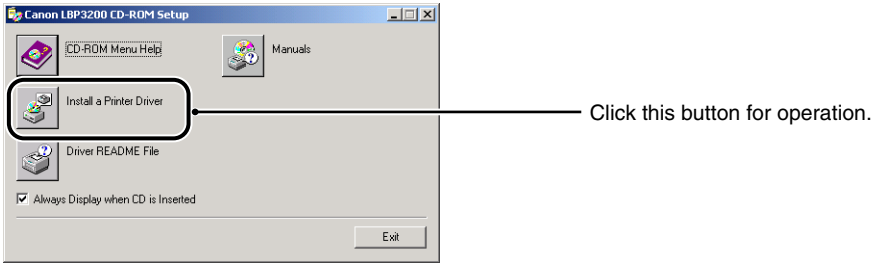

Abbreviations Used in This Manual

In this manual, product names and model names are abbreviated as follows:

Microsoft® Windows® 95 operating system:	Windows 95
Microsoft® Windows® 98 operating system:	Windows 98
Microsoft® Windows® Millennium Edition operating system:	Windows Me
Microsoft® Windows® 2000 operating system:	Windows 2000
Microsoft® Windows® XP operating system:	Windows XP
Microsoft® Windows® operating system:	Windows
LASER SHOT LBP3200:	LBP3200

Legal Notices

FCC (Federal Communications Commission)

Laser Beam Printer, Model F187900

■ 120 V model

This device complies with part 15 of the FCC Rules. Operation is subject to the following two conditions: (1) This device may not cause harmful interference, and (2) this device must accept any interference received, including interference that may cause undesired operation.
This equipment has been tested and found to comply with the limits for a class B digital device, pursuant to Part 15 of the FCC rules. These limits are designed to provide reasonable protection against harmful interference in a residential installation. This equipment generates, uses and can radiate radio frequency energy and if not installed and used in accordance with the instructions, may cause harmful interference to radio communications. However, there is no guarantee that interference will not occur in a particular installation.

If this equipment does cause harmful interference to radio or television reception, which can be determined by turning the equipment off and on, the user is encouraged to try to correct the interference by one or more of the following measures:

- Reorient or relocate the receiving antenna.
- Increase the separation between the equipment and receiver.
- Connect the equipment into an outlet on a circuit different from that to which the receiver is connected.
- Consult the dealer or an experienced radio/TV technician for help.

Use of shielded cable is required to comply with class B limits in Subpart B of Part 15 of FCC Rules.

Do not make any changes or modifications to the equipment unless otherwise specified in the manual. If such changes or modifications should be made, you could be required to stop operation of the equipment.

Canon U.S.A. Inc.
One Canon Plaza, Lake Success, NY 11042, U.S.A.
Tel No. (516) 328-5600

■ 220 - 240 V model

This equipment has been tested and found to comply with the limits for a Class A digital device, pursuant to Part 15 of the FCC Rules. These limits are designed to provide reasonable protection against harmful interference when the equipment is operated in a commercial environment. This equipment generates, uses, and can radiate radio frequency energy and if not installed and used in accordance with the instruction manual, may cause harmful interference to radio communications.

Operation of this equipment in a residential area is likely to cause harmful interference, in which case the user will be required to correct the interference at his own expense.

- Use of shielded cable is required to comply with Class A limits in Subpart B of Part 15 of FCC Rules.

Do not make any changes or modifications to the equipment unless otherwise specified in the manual. If such changes or modifications should be made, you could be required to stop operation of the equipment.

EMC Directive (220 - 240 V model)

"This equipment has been tested in a typical system to comply with the technical requirements of EMC Directive."

- Use of shielded cable is necessary to comply with the technical requirements of EMC Directive.

The product is in conformity with the EMC directive at nominal mains input 220 - 240 V, 50 Hz although the rated input of the product is 220 - 240 V, 50/60 Hz.

C-tick marking on the rating label means that we declare the product is in conformity with the relevant requirements at nominal mains input 240 V, 50 Hz although the rated input of the product is 220 - 240 V, 50/60 Hz.

Laser Safety (120 V/220 - 240 V models)

Laser radiation could be hazardous to the human body. For this reason, laser radiation emitted inside this printer is hermetically sealed within the protective housing and external cover. No radiation can leak from the printer in the normal operation of the product by the user.

This printer is classified as a Class 1 laser product under IEC60825-1:1993, EN60825-1:1994, and as for the U.S.A., it is classified as Class 1 under the Code of Federal Regulations, 1040.10 of Title 21.

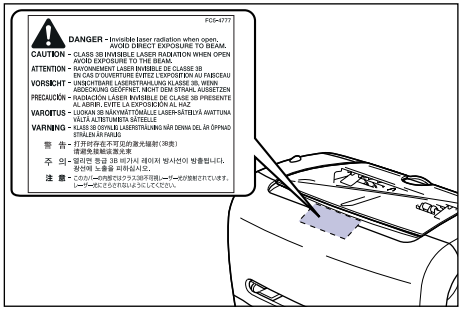

This printer has been classified under IEC60825-1:1993, EN60825-1:1994 and conforms to the following classes:

CLASS 1 LASER PRODUCT
LASER KLASSE 1
APPAREIL A RAYONNEMENT LASER DE CLASSE 1
APPARECCHIO LASER DI CLASSE 1
PRODUCTO LASER DE CLASE 1
APARELHO A LASER DE CLASSE 1
(220 - 240 V model only)

CAUTION

Performance of procedures other than those specified in this manual may result in hazardous radiation exposure.

International Energy Star-Program

As an ENERGY STAR Partner, Canon Inc. has determined that this product meets the ENERGY STAR Program for energy efficiency.

The International ENERGY STAR Office Equipment Program is an international program that promotes energy saving through the use of computers and other office equipment.

The program backs the development and dissemination of products with functions that effectively reduce energy consumption. It is an open system in which business proprietors can participate voluntarily.

The targeted products are office equipment, such as computers, displays, printers, facsimiles, and copiers. The standards and logos are uniform among participating nations.

Trademarks

Canon, the Canon Logo, LASER SHOT, and LBP are trademarks of Canon Inc.

Adobe® Acrobat is a trademark of Adobe Systems Incorporated.

Microsoft and Windows are trademarks of Microsoft Corporation in the U.S. and other countries.

Other product and company names herein may be the trademarks of their respective owners.

Copyright

Copyright 2003 by Canon Inc. All rights reserved.

No part of this publication may be reproduced or transmitted in any form or by any means, electronic or mechanical, including photocopying and recording, or by any information storage or retrieval system without the prior written permission of Canon Inc.

Disclaimers

The information in this manual is subject to change without notice.

CANON INC. MAKES NO WARRANTY OF ANY KIND WITH REGARD TO THIS MATERIAL, EITHER EXPRESS OR IMPLIED, EXCEPT AS PROVIDED HEREIN, INCLUDING WITHOUT LIMITATION, THEREOF, WARRANTIES AS TO MARKETABILITY, MERCHANTABILITY, FITNESS FOR A PARTICULAR PURPOSE OF USE OR AGAINST INFRINGEMENT OF ANY PATENT. CANON INC. SHALL NOT BE LIABLE FOR ANY DIRECT, INCIDENTAL, OR CONSEQUENTIAL DAMAGES OF ANY NATURE, OR LOSSES OR EXPENSES RESULTING FROM THE USE OF THIS MATERIAL.

Legal Limitations on the Usage of Your Product and the Use of Images

Using your product to scan, print or otherwise reproduce certain documents, and the use of such images as scanned, printed or otherwise reproduced by your product, may be prohibited by law and may result in criminal and/or civil liability. A non-exhaustive list of these documents is set forth below. This list is intended to be a guide only. If you are uncertain about the legality of using your product to scan, print or otherwise reproduce any particular document, and/or of the use of the images scanned, printed or otherwise reproduced, you should consult in advance with your legal advisor for guidance.

- Paper Money
- Money Orders
- Certificates of Deposit
- Postage Stamps (canceled or uncanceled)
- Identifying Badges or Insignias
- Selective Service or Draft Papers
- Checks or Drafts Issued by Governmental Agencies
- Motor Vehicle Licenses and Certificates of Title
- Travelers Checks
- Food Stamps
- Passports
- Immigration Papers
- Internal Revenue Stamps (canceled or uncanceled)
- Bonds or Other Certificates of Indebtedness
- Stock Certificates
- Copyrighted Works/Works of Art without Permission of Copyright Owner

Important Safety Instructions

Please read these "Important Safety Instructions" thoroughly before operating the printer.

As these instructions are intended to prevent injury to the user or other persons or destruction of property, always pay attention to these instructions. Also, since it may result in unexpected accidents or injuries, do not perform any operation unless otherwise specified in the manual. Improper operation or use of this machine could result in personal injury and/or damage requiring extensive repair that may not be covered under your Limited Warranty.

Installation

WARNING

- **Do not install the printer near alcohol, paint thinner, or other flammable substances. If flammable substances come into contact with electrical parts inside the printer, it may result in a fire or electrical shock.**
- **Do not place the following items on the printer. If these items come into contact with a high-voltage area inside the printer, it may result in a fire or electrical shock.**
  If these items are dropped or slipped inside the printer, immediately turn OFF the power switch ①, and disconnect the USB cable ② if you use it. Then, unplug the power plug from the AC power outlet ③, and contact your local authorized Canon dealer.
  - Necklaces and other metal objects
  - Cups, vases, flowerpots, and other containers filled with water or liquids

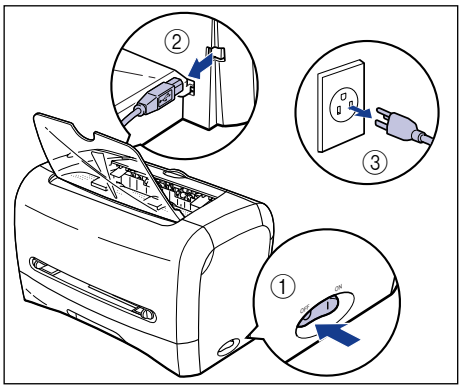

CAUTION

- Do not install the printer in unstable locations, such as unsteady platforms or inclined floors, or in locations subject to excessive vibrations, as this may cause the printer to fall or tip over, resulting in personal injury.
- Never block the ventilation slots on the printer. The vantilation slots are provided for proper ventilation of working parts inside the printer. Blocking the vantilation slots can cause the printer to overheat, resulting in a fire. Never place the printer on a soft surface, such as a sofa or rug.
- Do not install the printer in the following locations:
  - A damp or dusty location
  - A location exposed to smoke and steam such as cookeries and humidifiers.
  - A location exposed to rain or snow.
  - A location near water faucets or water
  - A location exposed to direct sunlight
  - A location subject to high temperatures
  - A location near open flames
- When installing the printer, gently lower the printer onto the floor or other machine to avoid catching your hands, as this may result in personal injury.
- When connecting the USB cable, connect it properly according to this manual. If not connected properly, this may result in malfunction or electrical shock.
- When moving the printer, follow the instructions in this manual to hold it correctly. Failure to do so may cause you to drop the printer, resulting in personal injury.

Power Supply

WARNING

- Do not damage or modify the power cord. Also, do not place heavy objects on the power cord, or pull on or excessively bend it, as this could cause electrical damage and result in a fire or electrical shock.
- Keep the power cord away from a heat source; failure to do this may cause the power cord coating to melt, resulting in a fire or electrical shock.
- Do not plug or unplug the power plug with wet hands, as this may result in electrical shock.
- Do not plug the power cord to a multiplug power strip, as this may cause a fire or electrical shock.
- Do not bundle up or tie the power cord in a knot, as this may result in a fire or electrical shock.
- Insert the power plug completely into the AC power outlet, as failure to do so may result in a fire or electrical shock.
- Do not use power cords other than the power cord provided, as this may result in a fire or electrical shock.
- As a general rule, do not use extension cords or plug extension cords to a multiple power strip. If extension cords must be used or plugged to a multiple power strip, however, use them observing the following points on user's own authority. If you use extension cords improperly, this may result in a fire or electrical shock.

- Do not connect one extension cord to another.
- Make sure that the voltage of the power plug is the one indicated in the rating label (attached on the back of the printer) when you use the printer.
- Use an extension cord that allows the current value greater than the necessary one indicated in the rating label (attached on the back of the printer).
- When you use an extension cord, untie the cord binding, and insert the power plug completely into the extension cord outlet to ensure a firm connection between the power cord and the extension cord.
- Periodically check that the extension cord is not overheated.

CAUTION

- Do not use power supplies with voltages other than those specified herein, as this may result in a fire or electrical shock.
- Always grasp the power plug when unplugging the power cord. Pulling on the power cord may expose or snap the core wire, or otherwise damage the power cord. If the power cord is damaged, this could cause current to leak, resulting in a fire or electrical shock.
- Leave sufficient space around the power plug so that it can be unplugged easily. If objects are placed around the power plug, you will be unable to unplug it in an emergency.

Handling

WARNING

- Do not attempt to disassemble or modify the printer. There are high-temperature and high-voltage components inside the printer which may result in a fire or electrical shock.
- Electrical equipment can be hazardous if not used properly. To avoid injury, do not allow children access to the interior of any electrical product and do not let them touch any electrical contacts or gears that are exposed.
- If the printer makes strange noises, or emits smoke, heat or unusual smells, immediately turn OFF the power switch, and disconnect the USB cable if you use it. Then, unplug the power plug from the AC power outlet, and contact the shop that you purchased this printer.
- Do not use highly flammable sprays near the printer. If gas from these sprays comes into contact with the electrical components inside the printer, it may result in a fire or electrical shock.
- To avoid damage to the power cord and creating a fire hazard, always turn OFF the power switch, and disconnect the USB cable when moving the printer. Otherwise, the power cord or USB cable may be damaged, resulting in a fire or electrical shock.

- **Do not drop paper clips, staples, or other metal objects inside the printer. Also, do not spill water, liquids, or flammable substances (alcohol, benzene, paint thinner, etc.) inside the printer. If these items come into contact with a high-voltage area inside the printer, it may result in a fire or electrical shock. If these items are dropped or slipped inside the printer, immediately turn OFF the power switch, and disconnect the USB cable if you use it. Then, unplug the power plug from the AC power outlet, and contact the shop that you purchased this printer.**
- **When connecting or disconnecting the USB cable while the power plug is plugged into the AC power outlet, do not touch the metal part of the connector. This may lead to an electrical shock.**

CAUTION

- **Do not place heavy objects on the printer, as they may tip over or fall resulting in personal injury.**
- **Turn OFF the power switch for safety when the printer will not be used for a long period of time such as overnight. Also, turn OFF the power switch on the right of the printer and unplug the power plug for safety when the printer will not be used for an extended period of time such as during consecutive holidays.**
- **The laser beam can be harmful to human bodies. Since radiation emitted inside the printer is completely confined within protective housings and external covers, the laser beam cannot escape from the printer during any phase of user operation. Read the following remarks and instructions for safety.**
  - **Never open covers other than those instructed in this manual.**
  - **Do not remove the caution label attached to the cover of the laser scanner unit.**

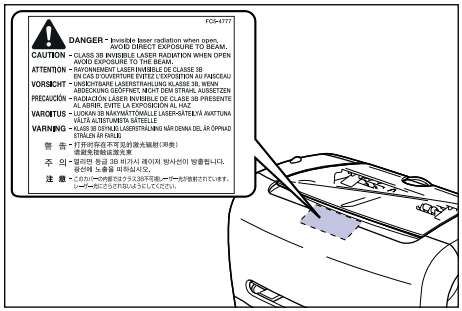

- **If the laser beam escapes from the printer, exposure may cause serious damage to your eyes.**

Maintenance and Inspections

WARNING

- When cleaning the printer, first turn OFF the power switch, disconnect the USB cable, then unplug the power plug. Failure to observe these steps may result in a fire or electrical shock.
- Clean the printer using a slightly dampened cloth with a mild detergent mixed with water. Do not use alcohol, benzene, paint thinner, or other flammable substances. Check detergent for flammability prior to use. If flammable substances come into contact with a high-voltage area inside the printer, it may result in a fire or electrical shock.
- There are some areas inside the printer which are subject to high-voltages. When removing jammed paper or when inspecting the inside of the printer, do not allow necklaces, bracelets, or other metal objects to touch the inside of the printer, as this may result in burns or electrical shock.
- Do not burn or throw a used toner cartridge into open flames, as this may cause the toner remaining inside the cartridge to ignite, resulting in burns or a fire.
- Unplug the power plug from the AC power outlet regularly, and clean the area around the base of the power plug's metal pins and the AC power outlet with a dry cloth to ensure that all dust and grime is removed. If the power plug is plugged for a long period of time in a damp, dusty, or smoky location, dust can build up around the power plug and become damp. This may cause a short circuit and result in a fire.

CAUTION

- Never attempt to service this printer yourself, except as explained in this manual. There are no user serviceable parts inside the printer. Adjust only those controls that are covered in the operating instructions. Improper adjustment could result in personal injury and/or damage requiring extensive repair that may not be covered under your Limited Warranty.
- The fixing unit and its surroundings inside the printer may become hot during use. When removing jammed paper or when inspecting the inside of the printer, do not touch the fixing unit and its surroundings, as doing so may result in burns or electrical shock.

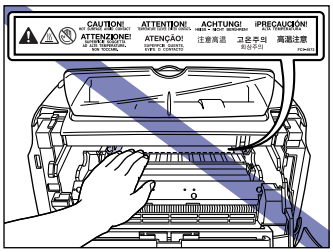

- When removing jammed paper or replacing the toner cartridge, take care not to allow the toner to come into contact with your hands or clothing, as this will dirty your hands or clothing. If they become dirty, wash them immediately with cold water. Washing with warm water will set the toner and make it impossible to remove the toner stains.

- When removing paper which has become jammed inside the printer, remove the jammed paper gently to prevent the toner on the paper from scattering and getting into your eyes or mouth. If the toner gets into your eyes or mouth, wash them immediately with cold water and immediately consult a physician.
- When loading paper or removing jammed paper, take care not to cut your hands on the edges of the paper.
- When removing a used toner cartridge from the toner cartridge slot, remove the cartridge carefully to prevent the toner from scattering and entering your eyes or mouth. If the toner enters your eyes or mouth, wash them immediately with cold water and immediately consult a physician.

Consumables

WARNING

- Do not throw a used toner cartridge into open flames, as this may cause toner remaining inside the cartridge to ignite and result in burns or a fire.
- Do not store a toner cartridge or copy paper in places exposed to open flames, as this may cause the toner or paper to ignite and result in burns or a fire.

CAUTION

Keep toner and other consumables out of the reach of small children. If these items are ingested, consult a physician immediately.

Before You Start Using This Printer

1

CHAPTER

This chapter describes the major features and basic functions of this printer.

Features and Benefits 1-2

Parts and Their Functions 1-4

Front View 1-5

Rear View 1-6

Internal View 1-7

Plugging the Power Cord 1-8

Turning the Printer ON/OFF 1-11

Turning the Printer ON 1-11

Turning the Printer OFF 1-12

Connecting to a Computer 1-13

Features and Benefits

■ High Performance Printing System "CAPT"

LBP3200 is equipped with the latest CAPT (Canon Advanced Printing Technology) software supporting Windows 98/Me and Windows 2000/XP. As this system batch-processes the print data in a computer instead of a printer, it enables high-speed printing, making full use of the features of a computer. It shortens the time period over which the computer is freed. The information, such as out of paper, the remaining time of printing and the estimated time of print completion, appears on the display in real time.

■ USB Interface Equipped as Standard

The USB (Universal Serial Bus) interface with which the peripheral devices can be connected using one connector is equipped as standard.

■ High-speed Printing & Extra-High-definition Image Printing

18-sheet-a-minute high-speed printing minimizes your stress of waiting for print completion. LBP3200 is equipped with a printer engine of 600 dpi resolution. By adopting Canon's own new Automatic Image Refinement, an 2400 dpi-equivalent x 600 dpi extra-high-definition image can be obtained. The gray scale adopting the dither method produces delicate images such as photographs and graphics beautifully.

■ Supporting Various Networks

If you use this printer as a network printer, the status is displayed in both the server and client computers. You can perform job operations from both of them.

■ Supporting Various Type of Materials

Various types of materials, such as plain paper, envelops (Envelope C5, Envelope COM10, Envelope DL, Envelope Monarch), labels, transparencies, can be used for this printer. Although this printer is for A4-size paper, its reduction mode can reduce a document of larger size, such as A3 and B4, to A4 size to print.
It can also produce a print of custom paper size.

■ Low Power Consumption and Quick Startup

Canon's own "On-demand Fixing System" achieves low power consumption and quick startup. This innovative technology heats the fixing heater instantaneously only at printing, and saves warm-up time. So, LBP3200 is always in standby status and ready to print. Furthermore, the average power consumption at standby status is only about 7 W.

■ Compact & Quiet Design

The compact design of this printer saves space in your home or office.
Quiet during print and noiseless in standby status allow you to use this printer without concerning with neighbourhood even at night.

■ Easy Maintenance & Printer Status Window

Uniting toner with a photosensitive drum, the toner cartridge for LBP3200 can be easily replaced.
The Printer Status Window that is displayed during print allows you to make exact judgements by graphics and sound, improving the operability of this printer.

Parts and Their Functions

This section describes the name and function of each part in order for you to use this printer properly to make full use of the functions.

CAUTION

Never block the ventilation slots on the printer. The vantilation slots are provided for proper ventilation of working parts inside the printer. Blocking the vantilation slots can cause the printer to overheat, resulting in a fire.

NOTE

For the 120 V model, a cover is attached to the face-down delivery area.

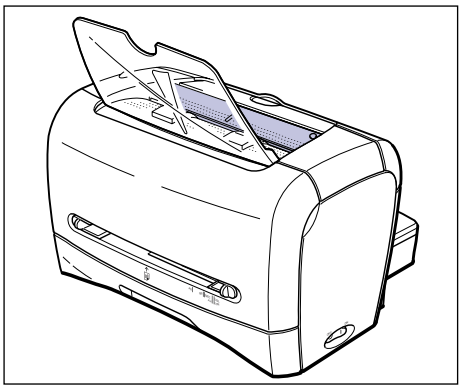

Front View

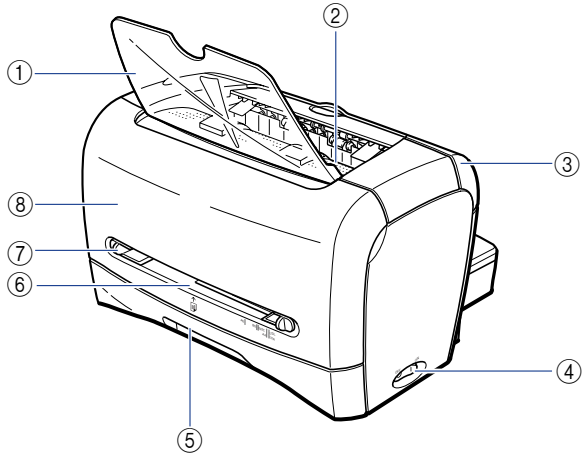

① Face-down Delivery Tray

Allows paper to be delivered straight.

② Face-down Delivery Area

Delivers paper with the printing surface face down. (See p. 2-11.)

③ Delivery Selection Cover

Switches between face-up delivery and face-down delivery. (See p. 2-13.)

④ Power Switch

Turns ON/OFF the printer. (See p. 1-11.)

⑤ Cassette

Allows you to load a maximum of 250 sheets of plain paper (64 g/m^2). (See p. 2-9.)

⑥ Manual Feed Slot

Used when printing paper one by one manually. (See p. 2-9.)

⑦ Paper Guide

Align this paper guide with the width of the paper so that paper is delivered straight.

⑧ Front Cover

Opened when replacing the toner cartridge or removing paper jams.

Rear View

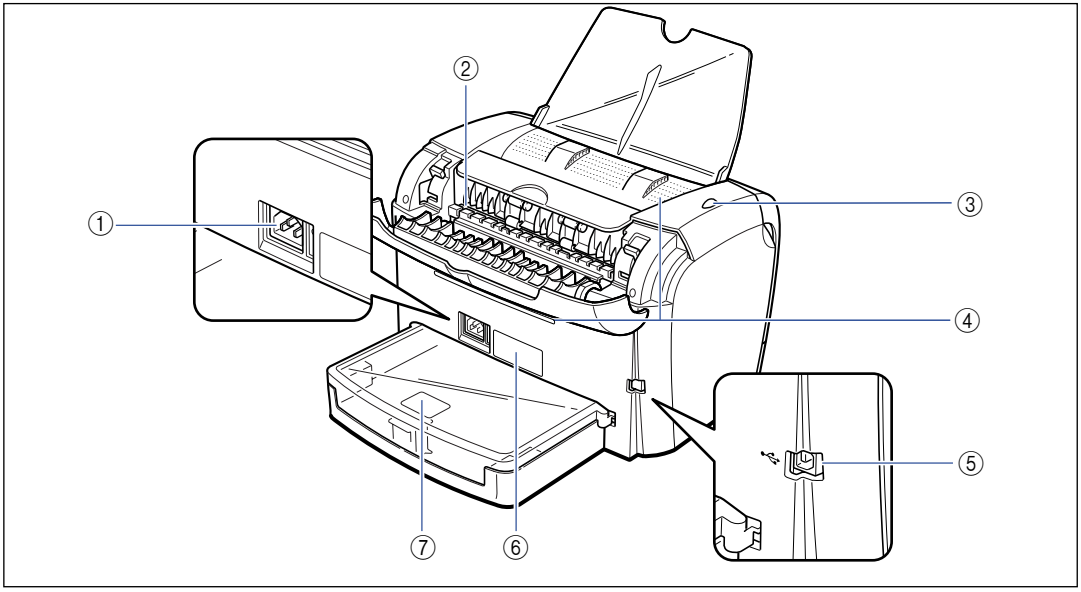

① Power Socket

Connected to the supplied power cord. (See p. 1-8.)

② Face-up Delivery Slot

Delivers paper with the printing surface face up. (See p. 2-12.)

③ Power Indicator

Lights up when the printer is ON.

④ Ventilation Slot

Cools the insides of the printer. Do not block the ventilation slot.

⑤ USB Connector

Connected to the USB cable. The USB cable is connected to the USB port on the computer. (See p. 1-14.)

⑥ Rating Label

The serial number for printer identification is indicated on this label. The number is required for receiving service or repairs. The current value indicated in this rating label shows the average power current consumption.

⑦ Cassette Protective Cover

Prevents dirt and dust from entering into the cassette.

Internal View

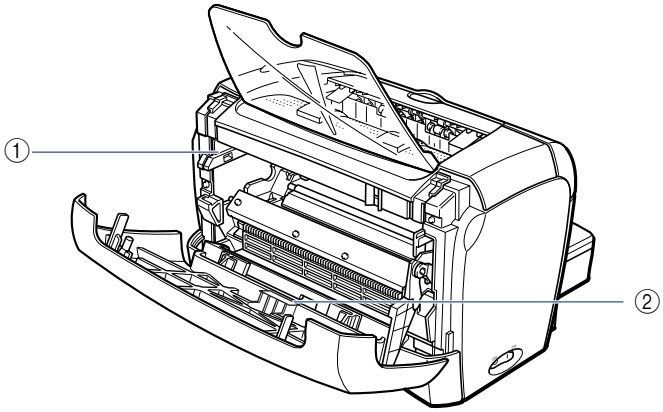

① Toner Cartridge Guide

When setting the toner cartridge, push it while aligning the projection at each side of the toner cartridge with this guide. (See p. 5-5.)

② Black Film

Do not peel off this film.

Plugging the Power Cord

This section describes the procedure for connecting the power cord. Before connecting the power cord, see "Important Safety Instructions," on p. xv.

WARNING

- **Do not damage or modify the power cord. Also, do not place heavy objects on the power cord, or pull on or excessively bend it, as this could cause electrical damage and result in a fire or electrical shock.**
- **Keep the power cord away from a heat source; failure to do this may cause the power cord coating to melt, resulting in a fire or electrical shock.**
- **Do not plug or unplug the power plug with wet hands, as this may result in electrical shock.**
- **Do not plug the power cord to a multiplug power strip, as this may cause a fire or electrical shock.**
- **Do not bundle up or tie the power cord in a knot, as this may result in a fire or electrical shock.**
- **Insert the power plug completely into the AC power outlet, as failure to do so may result in a fire or electrical shock.**
- **Do not use power cords other than the power cord provided, as this may result in a fire or electrical shock.**
- **As a general rule, do not use extension cords or plug extension cords to a multiple power strip. If extension cords must be used or plugged to a multiple power strip, however, use them observing the following points on user's own authority. If you use extension cords improperly, this may result in a fire or electrical shock.**
  - **Do not connect one extension cord to another.**
  - **Make sure that the voltage of the power plug is the one indicated in the rating label (attached on the back of the printer) when you use the printer.**
  - **Use an extension cord that allows the current value greater than the necessary one indicated in the rating label (attached on the back of the printer).**
  - **When you use an extension cord, untie the cord binding, and insert the power plug completely into the extension cord outlet to ensure a firm connection between the power cord and the extension cord.**
  - **Periodically check that the extension cord is not overheated.**

CAUTION

- **Do not use power supplies with voltages other than those specified herein, as this may result in a fire or electrical shock.**
- **Always grasp the power plug when unplugging the power cord. Pulling on the power cord may expose or snap the core wire, or otherwise damage the power cord. If the power cord is damaged, this could cause current to leak, resulting in a fire or electrical shock.**
- **Leave sufficient space around the power plug so that it can be unplugged easily. If objects are placed around the power plug, you will be unable to unplug it in an emergency.**

IMPORTANT

- Do not plug the power cord into the auxiliary outlet on the computer.
- One AC power outlet should be used exclusively for the printer.
- Do not connect this printer to an uninterruptible power source. This may cause printer malfunction or breakdown at the occurrence of a power failure.

1 Make sure that the power switch is turned OFF.

The printer is OFF when "○" of the power switch is pressed.

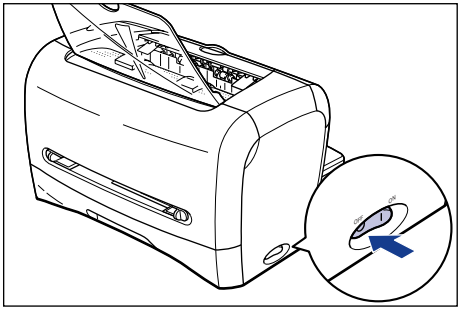

2 Plug the supplied power cord into the power socket.

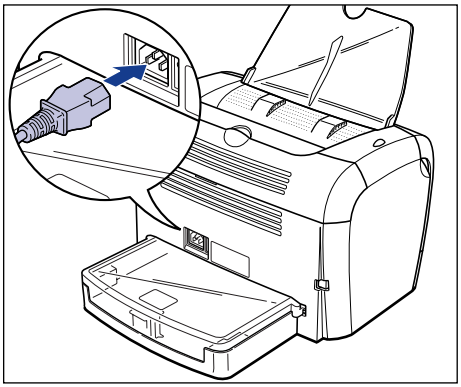

3 Plug the power plug into the AC power outlet.

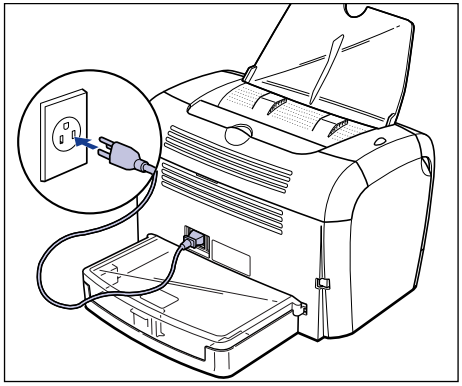

Turning the Printer ON/OFF

The power switch to turn ON or OFF the printer is located on the right side of the printer. Be sure to observe the following instructions in order to prevent unexpected problems.

Turning the Printer ON

In order to use this printer, you should press "|" of the power switch to turn ON the printer. After running a self-diagnostic test, the printer will be ready to print.

IMPORTANT

- Do not turn ON the printer immediately after turning it OFF. After turning OFF the printer, wait for 10 seconds or longer before turning it ON again.
- If the printer does not operate properly, or an error message appears in the Printer Status Window, see "Troubleshooting," on p. 6-1.
- Before turning ON the printer, make sure that paper is not set in the manual feed slot. If you turn ON the printer when paper is set in the manual feed slot, this may cause paper jams.
- When you turn the printer ON for the first time after you install the printer, a blank sheet may be delivered. However it is not abnormal.

1 **Press "|" of the power switch to turn ON the printer.**

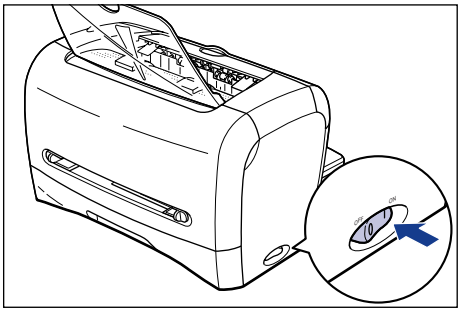

The power indicator lights up and the printer initiates a self-diagnostic test. If no abnormality is found out in the self-diagnostic test, the printer is ready to print.

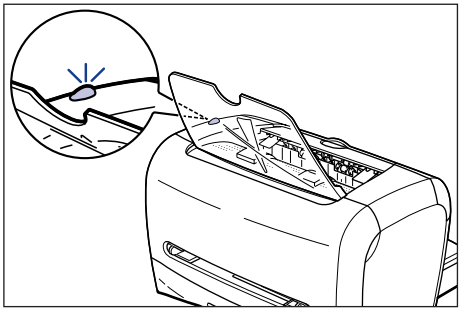

Turning the Printer OFF

Follow the instruction below to turn OFF the printer.

IMPORTANT

- If the printer is used in a network, before turning OFF the printer, make sure that other computers do not send printing data into the printer.
- If you turn OFF the printer, all print data remaining in the printer memory will be erased. So, wait for the necessary print data to be printed before turning OFF the printer.
- Do not turn OFF the printer in the following status.
  - During print
  - While running a self-diagnostic test immediately after turning ON the printer

1 **Press "○" of the power switch to turn OFF the printer.**

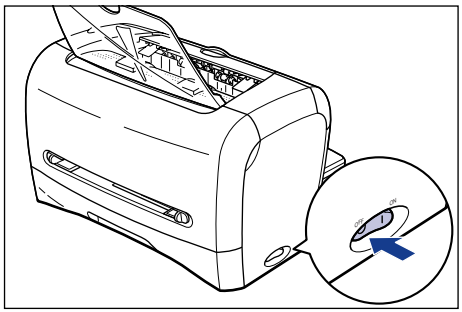

IMPORTANT

The power consumption of the printer with "○" of the power switch pressed is 0 W.

Connecting to a Computer

This section describes how to connect the printer to a computer.
As this printer is equipped with the USB connector, you can use a USB cable to connect to a computer.
By using a USB cable, this printer can be connected to a computer equipped with the USB port.

WARNING

When connecting or disconnecting the USB cable while the power plug is plugged into the AC power outlet, do not touch the metal part of the connector. This may lead to an electrical shock.

IMPORTANT

- You can connect or disconnect the USB cable even while the computer or printer is ON. However, do not connect or disconnect the USB cable in the following situations, as this may result in a computer or printer glitch.
  - While the computer operating system is starting up immediately after the computer is turned ON
  - During print
- If you connect or disconnect the USB cable while the computer or printer is ON, after disconnecting the USB cable, wait for 5 seconds or longer before connecting it again. If you connect the USB cable immediately after disconnecting it, this may result in a computer or printer glitch.

NOTE

- The USB interface for this printer supports USB Full-Speed (USB 1.1 equivalent). For more details, contact the store where you purchased this printer.
- When you connect this printer to a computer with a USB cable, use a computer with manufacturer's guarantee of USB proper operation.
- If you are not sure about the USB cable that is supported by your computer, contact the store where you purchased the computer.

1 **Connect the B-type (square) end of the USB cable to the USB connector on the rear side of the printer.**

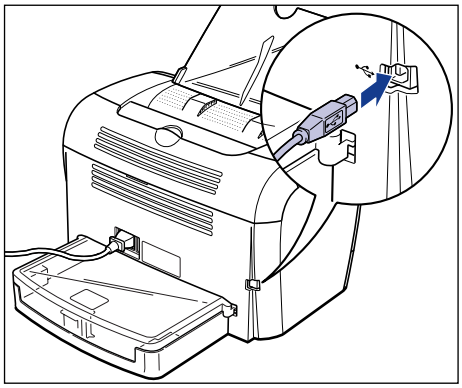

2 **Connect the A-type (flat) end of the USB cable to the USB port on the computer.**

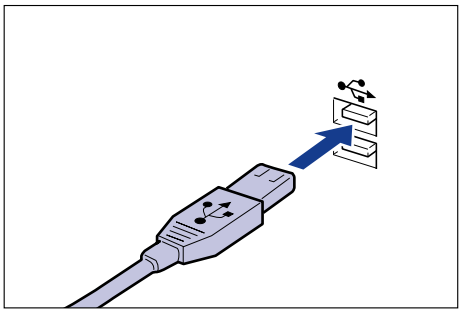

NOTE

After connecting the USB cable, install the software for this printer according to the instructions on the computer screen. For more details, see "Installing the CAPT Software," on p. 3-4.

Loading and Delivering Paper

2
CHAPTER

This chapter describes the types of paper that can be used with this printer, and how to load and deliver paper.

Paper Requirements 2-2
- Usable Paper 2-2
- Printable Area 2-6
- Unusable Paper 2-7
- Storing Paper 2-8

Paper Source 2-9
- Paper Source Type 2-9
- Paper Capacity for Paper Source 2-10

Paper Delivery Area 2-11
- Paper Delivery Area Type 2-11
- Paper Capacity for Paper Delivery Area 2-12
- Selecting the Paper Delivery Area 2-13

Printing on Plain Paper / Heavy Paper / Label / Transparency 2-14
- Loading Paper 2-14
- Setting Printer Driver and Printing 2-23

Printing on Envelope 2-27
- Loading Envelope 2-27
- Setting Printer Driver and Printing 2-37

Printing on Custom Paper 2-40
- Loading Custom Paper 2-40
- Setting Printer Driver and Printing 2-43

Paper Requirements

Usable Paper

To ensure optimum performance, use only paper that falls within the specifications listed below. Inappropriate paper may deteriorate print quality or result in paper jams.

IMPORTANT

- In the following cases, the safety function that prevents damage caused by heat may slow the print speed down in stages.
  - For a continuous job on B5 or A5 size heavy paper, Envelope C5, Envelope COM10, Envelope DL, or Envelope Monarch, the print speed may drop down to 3 ppm.
  - For a continuous job on B5 or A5 size plain paper, the print speed may drop down to 4 ppm.
- When printing paper continuously, be sure that the amount of paper to be loaded at any one time does not exceed its paper capacity.

Paper Size

The following shows the usable paper sizes. A circle mark (O) indicates that the type can be used, and a cross mark (X) indicates that the type cannot be used.

Paper Size	Size	Paper Source	
		Cassette	Manual Feed Slot
A4	210.0 mm x 297.0 mm 8.27 inch x 11.69 inch	O	O
B5	182.0 mm x 257.0 mm 7.17 inch x 10.12 inch	O	O
A5	148.0 mm x 210.0 mm 5.83 inch x 8.27 inch	O	O
Legal	215.9 mm x 355.6 mm 8.50 inch x 14.00 inch	X*	O
Letter	215.9 mm x 279.4 mm 8.50 inch x 11.00 inch	O	O
Executive	184.1 mm x 266.7 mm 7.25 inch x 10.50 inch	O	O

Paper Size	Size	Paper Source	
		Cassette	Manual Feed Slot
Envelope C5	162.0 mm x 229.0 mm 6.38 inch x 9.02 inch	O	O
Envelope COM10	104.9 mm x 241.3 mm 4.13 inch x 9.50 inch	O	O
Envelope DL	110.0 mm x 220.0 mm 4.33 inch x 8.66 inch	O	O
Envelope Monarch	98.5 mm x 190.5 mm 3.88 inch x 7.50 inch	O	O
Custom Paper	Width: 76.2-215.9 mm length: 127.0-355.6 mm	X	O

* If "LGL" is indicated in the cassette, you can load the legal-size paper in the cassette. Whether "LGL" is indicated in the cassette or not depends on the area where you purchased this printer.

Paper Type

The following shows the usable paper types. A circle mark (O) indicates that the type that can be used.

Paper Type	Printer Driver Setting	Paper Source	
		Cassette	Manual Feed Slot
Plain paper (64 - 90 g/m^2)	[Plain Paper] [Plain Paper L] *1	O	O
Heavy paper (91-163 g/m^2)	[Heavy Paper] [Heavy Paper H] *2	O*5	O
Transparency	[Transparencies]	O	O
Label	[Heavy Paper] [Heavy Paper H] *3	O*6	O
Envelope	*4	O	O

*1 If paper curls excessively when printed with [Plain Paper] selected, select [Plain Paper L].

*2 If print fixing is not sufficient when printed with [Heavy Paper] selected, select [Heavy Paper H].

*3 For printing on labels, select [Heavy Paper] for the paper type. If print fixing is not sufficient when printed with [Heavy Paper] selected, select [Heavy Paper H].

*4 For printing on envelopes, select any of [Envelope C5], [Envelope COM10], [Envelope DL], or [Envelope Monarch] for the paper size. Then, printing is performed in the appropriate print mode automatically. You do not have to set the paper type.

*5 The heavy paper that you can load in the cassette is the one in weight of 128 g/m^2 or less. Set heavy paper in weight of 129 g/m^2 or over in the manual feed slot.

*6 A label that can be loaded in the cassette is a standard type (label standard card) only.

■ Plain Paper

This printer can print on plain paper in width of 76.2 to 215.9 mm, in length of 127.0 to 355.6 mm, and in weight of 64 to 90 g/m^2 including the standard size paper: A4, B5, A5, Legal, Letter, and Executive.

IMPORTANT

If "LGL" is indicated in the cassette, you can load the legal-size paper in the cassette. Whether "LGL" is indicated in the cassette or not depends on the area where you purchased this printer.

■ Heavy Paper

This printer can print on heavy paper in width of 76.2 to 215.9 mm, in length of 127.0 to 355.6 mm, and in weight of 91 to 163 g/m^2 including the standard size paper: A4, B5, A5, Legal, Letter, and Executive.

IMPORTANT

- If "LGL" is indicated in the cassette, you can load the legal-size paper in the cassette. Whether "LGL" is indicated in the cassette or not depends on the area where you purchased this printer.
- The heavy paper that you can load in the cassette is the one in weight of 128 g/m^2 or less. Set heavy paper in weight of 129 g/m^2 or over in the manual feed slot.

■ Transparency

This printer can print on A4- and Letter-size transparencies.

IMPORTANT

Thoroughly fan transparencies before loading them as they may stick to each other.

■ Label

This printer can print on A4- and Letter-size labels.

IMPORTANT

- Do not use the following types of labels. Using inappropriate labels may result in paper jams that are difficult to clear or may result in damaging the printer.
  - Peeled labels or partly used labels
  - Coated labels that are easily peeled off from the backing sheet
  - Labels with adhesive protruded
- A label that can be loaded in the cassette is a standard type (label standard card) only. Set any type of labels other than the standard type (label standard card) in the manual feed slot.

■ Envelope

This printer can print on Envelope C5, Envelope COM10, Envelope DL, and Envelope Monarch.

IMPORTANT

- The following shows the usable envelopes for this printer.

Envelope DL
110.0 mm x 220.0 mm
(4.33 inch x 8.66 inch)

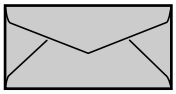

Envelope Monarch
98.5 mm x 190.5 mm
(3.88 inch x 7.50 inch)

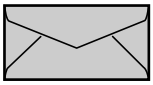

Envelope COM10
104.9 mm x 241.3 mm
(4.13 inch x 9.50 inch)

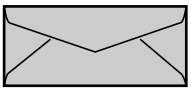

Envelope C5
162.0 mm x 229.0 mm
(6.38 inch x 9.02 inch)

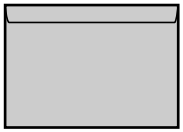

* Envelopes with a flap on the short edge cannot be used.

- Do not use the following types of envelopes. Using inappropriate envelopes may result in paper jams that are difficult to clear or may result in damaging the printer.
  - Envelopes with fasteners or snaps
  - Envelopes with address windows
  - Envelopes with adhesive on the surface
  - Wrinkled or creased envelopes
  - Poorly manufactured envelopes in which the glued parts are uneven
  - Irregularly-shaped envelopes
- Before loading the envelopes, flatten the stack of envelopes to release any remaining air, and press the fold lines at edges tightly.
- Do not print on the back of an envelope.
- Printing speed drops when printing on envelops.

Abbreviation of Paper Size

The following shows the abbreviations of the paper size that are indicated on the paper guide.

Paper Size	Paper Guide
Legal	LGL*
Letter	LTR
Executive	EXEC
Envelope C5	ENV. ISO-C5
Envelope COM10	ENV. COM10

Paper Size	Paper Guide
Envelope DL	ENV. DL
Envelope Monarch	ENV. MONARCH

* "LGL" (legal size) may be indicated in the cassette depending on the area where you purchased this printer.

Printable Area

The following shows the printable area of this printer.

■ Plain Paper / Heavy Paper / Transparency / Label

The areas within 5 mm from all sides of paper cannot be printed on.

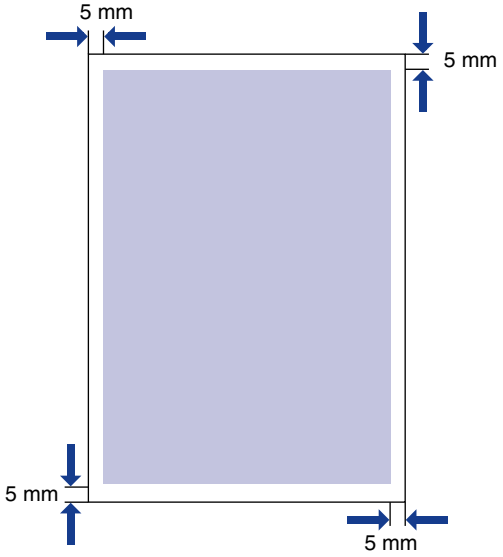

■ Envelope

The areas within 5 mm from all sides of an envelope cannot be printed on.
You may have to change the printable area in the application you use before printing.

(Sample : Envelope COM 10)

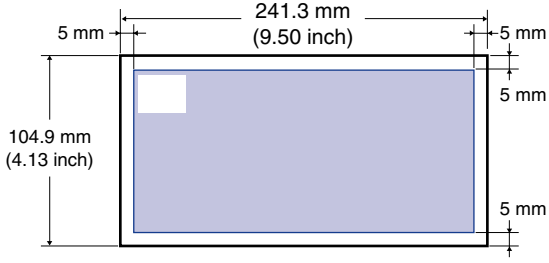

Unusable Paper

To avoid problems such as paper jams and other malfunctions, the following types of paper should never be used.

IMPORTANT

- Paper to be easily jammed
  - Too thick or thin paper
  - Irregularly-shaped paper
  - Wet or moist paper
  - Torn or damaged paper
  - Rough, extremely smooth, or glossy paper
  - Paper with binding holes or perforations
  - Curled or creased paper
  - Specially coated paper (coated paper for ink jet printers, etc.)
  - Labels with backing sheet to be easily peeled off.
  - Paper that has been already printed with a copy machine or other laser printer (The reverse side of the paper is also unusable.)
  - Jagged-edged paper
  - Wrinkled paper
  - Paper with the corners folded
- Paper that changes its quality at a high temperature
  - Paper that contains ink that melts, burns, evaporates or emits harmful gases with the heat (approx. 170 °C or 338 °F) of the fixing unit.
  - Heat-sensitive paper
  - Treated color paper
  - Specially coated paper (coated paper for ink jet printers, etc.)
  - Paper with adhesive on its surface
- Paper that causes printer malfunctions or damages the printer
  - Carbon paper
  - Paper with staples, clips, ribbons or tapes
  - Paper that has been already printed with a copy machine or other laser printer (The reverse side of the paper is also unusable.)
- Paper that is difficult for the toner to fix onto
  - Paper with rough surfaces
  - Specially coated paper (coated paper for ink jet printers, etc.)
  - Paper containing thick fibers

Storing Paper

The quality of paper may deteriorate if it is stored improperly even when the paper meets the normal specifications. Deteriorated paper may cause misfeeds, paper jams, or deterioration in print quality.

Observe the following guidelines for storing and handling paper:

IMPORTANT

- Store paper away from moisture since paper quality deteriorates in a moist environment.
- Paper wrappers help avoiding moisture and dryness. Keep paper in the wrapper until it is ready to be used.
- Store paper on a flat surface.
- Do not store paper on the floor where water and moisture can accumulate.
- Avoid physical damage to stored paper.
- Do not store a paper stack vertically or do not pile up too many paper stacks.
- Avoid direct sunlight and a humid or dry place when storing paper.
- If the paper storage room and work area differ from each other significantly in temperature or humidity, keep packed paper stack in the work area for at least one day prior to printing so that it can adapt to the new environment. When paper is moved to a location where the temperature or humidity differs significantly, the paper may curl or get creased.

Paper Source

Paper Source Type

This printer has two paper sources: the cassette and the manual feed slot.

■ Standard

Paper source:

Manual feed slot
Cassette

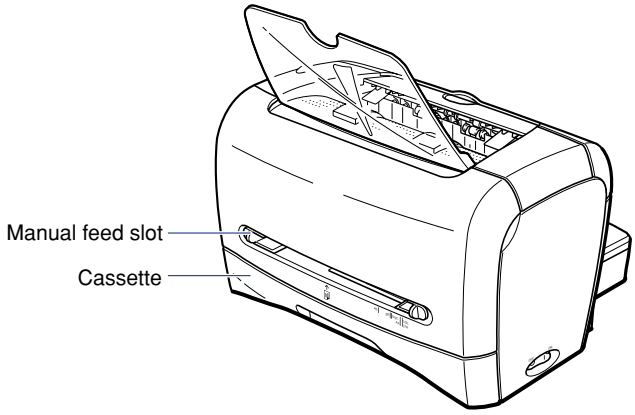

IMPORTANT

Before printing on paper that is fed from the cassette, make sure that paper is not set in the manual feed slot. If paper is set in the manual feed slot, the paper in the manual feed slot is fed first.

Paper Capacity for Paper Source

The following shows the paper capacity for the cassette and the manual feed slot.

Paper Type	Paper Source	
	Cassette	Manual Feed Slot
Plain paper (64 g/m^2)	Approx. 250 sheets	1 sheet
Heavy paper (128 g/m^2)	Approx. 100 sheets	1 sheet
Transparency	Approx. 100 sheets	1 sheet
Label	Approx. 100 sheets	1 sheet
Envelope	Approx. 20 sheets	1 sheet

Paper Delivery Area

Paper Delivery Area Type

This printer has two paper delivery areas: "face-down delivery area" and "face-up delivery slot".

Face-down Delivery Area

Prints are delivered to the face-down delivery area with the printing surface face down.
When delivering paper to the face-down delivery area, open the face-down delivery tray.

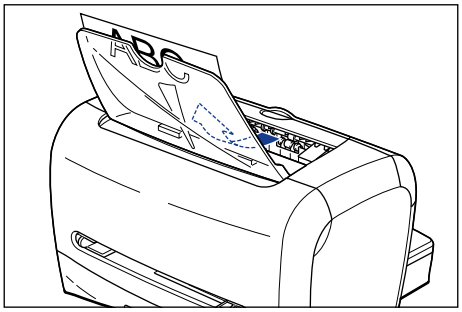

IMPORTANT

The face-down delivery area becomes extremely hot while printing or immediately after printing. When removing paper or paper jam, be careful not to touch the face-down delivery area and its surroundings.

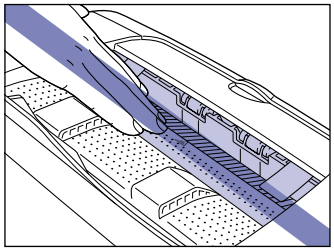

NOTE

Up to approximately 100 sheets of plain paper (64 g/m^2) can be loaded in the face-down delivery area.

Face-up Delivery Slot

Prints are delivered to the face-up delivery slot with the printing surface face up. The face-up delivery slot is suitable for printing on transparencies, envelopes or labels which tend to curl, as the face-up delivery slot feeds the printed material flat.

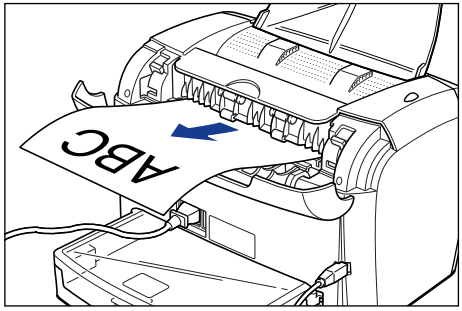

IMPORTANT

- Remove paper from the face-up delivery slot each time one sheet of paper is fed.
- The face-up delivery slot becomes extremely hot while printing or immediately after printing. When removing paper or paper jam, be careful not to touch the face-up delivery slot and its surroundings.

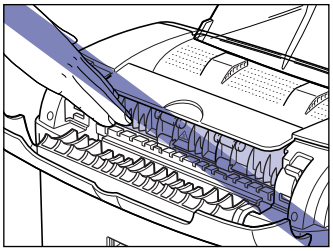

Paper Capacity for Paper Delivery Area

The following shows the number of sheets that can be delivered into the face-down delivery area and the face-up delivery slot.

Paper Type	Paper Delivery Area	
	Face-down Delivery Area	Face-up Delivery Slot
Plain paper (64 g/m^2)	Approx. 100 sheets	1 sheet
Heavy paper (128 g/m^2)	Approx. 30 sheets	1 sheet
Transparency	Approx. 10 sheets	1 sheet
Label	Approx. 10 sheets	1 sheet
Envelope	Approx. 10 sheets	1 sheet

IMPORTANT

The following shows the number of sheets that can be delivered into the face-down delivery area for the 120 V model.

- Plain paper (64 g/m^2)	Approx. 100 sheets
- Heavy paper (128 g/m^2)	Approx. 30 sheets
- Transparency	Approx. 5 sheets
- Label	Approx. 10 sheets
- Envelope	Approx. 10 sheets

Selecting the Paper Delivery Area

Switching into the Face-up Delivery Slot

To switch into the face-up delivery slot, open the delivery selection cover by holding the edge as shown in the figure.

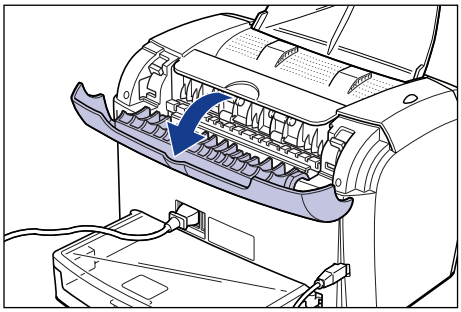

Switching into the Face-down Delivery Area

To switch into the face-down delivery area, close the delivery selection cover by holding the edge as shown in the figure.

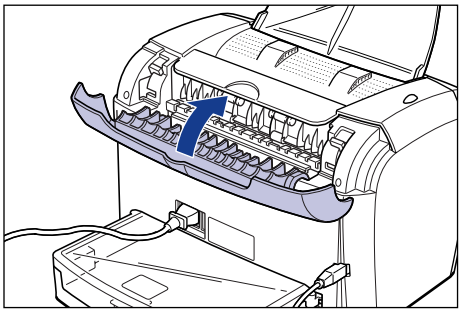

NOTE

If the face-down delivery tray is closed, open it.

Printing on Plain Paper / Heavy Paper / Label / Transparency

This section describes the procedure for printing on plain paper, heavy paper, labels, and transparencies.

For instructions on printing on custom paper, see "Printing on Custom Paper," on p. 2-40.

Loading Paper

The paper sources in which you can load paper are the cassette and the manual feed slot. For continuous print, load paper in the cassette.

For printing on one sheet of paper that differs in size or type from paper in the cassette, set the paper in the manual feed slot.

IMPORTANT

- Before printing on paper that is fed from the cassette, make sure that paper is not set in the manual feed slot. If paper is set in the manual feed slot, the paper in the manual feed slot is fed first.
- Do not set paper in the manual feed slot while printing is being made with paper fed from the cassette. If you do so, the paper in the manual feed slot is fed, resulting in double-feeds or paper jams.
- Do not load jagged-edged, creased, or extremely curled paper. It may result in paper jams or printer malfunction.
- For more details on usable paper, see "Usable Paper," on p. 2-2.
- If "LGL" is indicated in the cassette, you can load the legal-size paper in the cassette. Whether "LGL" is indicated in the cassette or not depends on the area where you purchased this printer.
- This printer can print on A4- and Letter-size transparencies.
- This printer can print on A4- and Letter-size labels.
- Do not use the following types of labels. Using inappropriate labels may result in paper jams that are difficult to clear or may result in damaging the printer.
  - Peeled labels or partly used labels
  - Coated labels that are easily peeled off from the backing sheet
  - Labels with adhesive protruded
- A label that can be loaded in the cassette is a standard type (label standard card) only. Set any type of labels other than the standard type (label standard card) in the manual feed slot.
- The heavy paper that you can load in the cassette is the one in weight of 128 g/m^2 or less. Set heavy paper in weight of 129 g/m^2 or over in the manual feed slot.

Loading Paper in the Cassette

Follow the procedure below to load paper in the cassette.
Load the paper lengthways in the cassette.

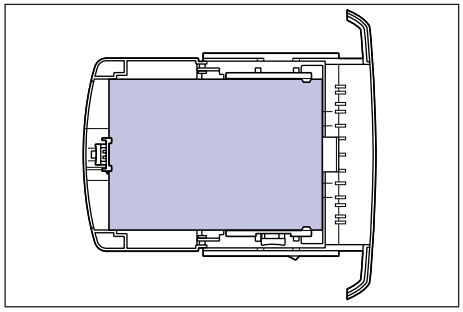

IMPORTANT

- Do not take the cassette out of the printer while printing. It may result in paper jams or printer malfunction.
- If you refill the cassette when a few sheets of paper still remain, take out the loaded paper once, then align the paper to be refilled and taken out paper together.
- Do not touch the black rubber pad in the cassette. If you touch it, this may result in misfeeds.

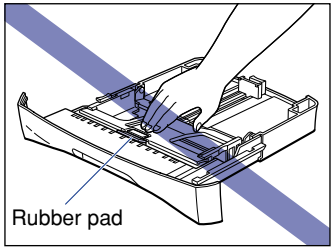

- Do not lift the cassette by holding only the rear part of the cassette. If you do so, the rear part of the cassette may come off.

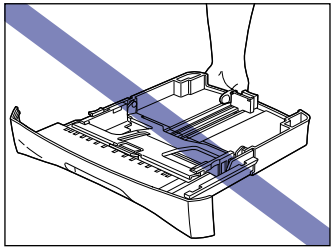

1 Pull out the cassette.

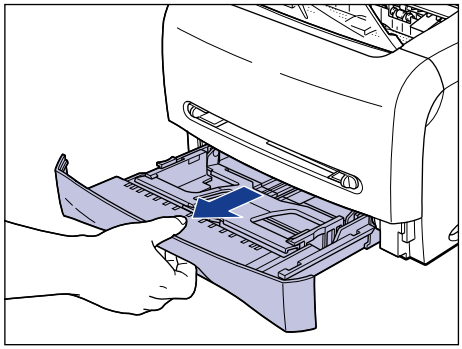

2 While holding the lock release lever on the paper guide at the rear of the cassette, slide the paper guide to the mark indicating the desired paper size.

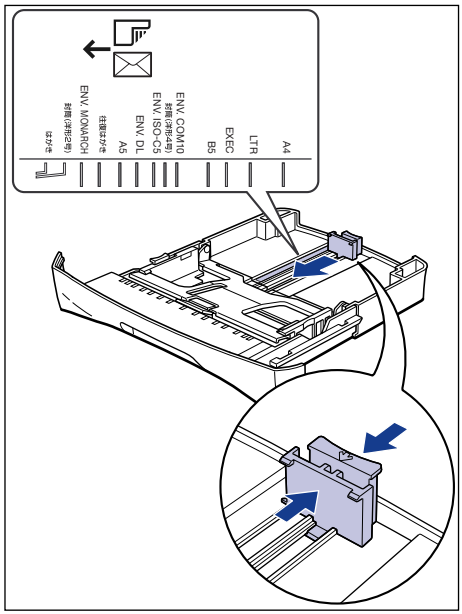

IMPORTANT

If "LGL" is indicated in the cassette, you can load the legal-size paper in the cassette. Whether "LGL" is indicated in the cassette or not depends on the area where you purchased this printer.

NOTE

"LGL" indicated in the cassette shows legal size, "LTR" shows letter size, and "EXEC" shows executive size.

3 While holding the lock release lever on the paper guide on either side of the cassette, slide the paper guide to the mark indicating the desired paper size.

The paper guides on the sides of the cassette move together.

When you load the legal-size paper in the cassette on which "LGL" is indicated, slide the paper guide on either side of the cassette to "LTR".

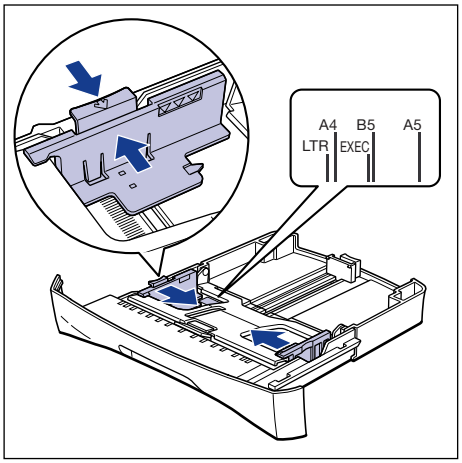

NOTE

"LTR" indicated in the cassette shows letter size, and "EXEC" shows executive size.

4 Before loading transparencies or labels, fan them in small portions and align the edges.

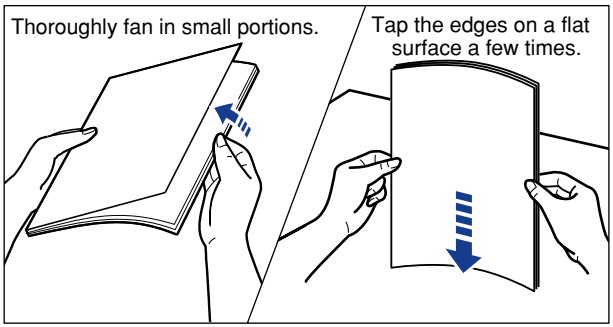

CAUTION

Be careful not to cut your hands with the edges of the transparencies or labels.

IMPORTANT

- Be sure to fan the transparencies or labels thoroughly before loading them. If they are not fanned enough, this may result in double-feeds or paper jams.
- When fanning or aligning the transparencies, try to hold the edges to avoid touching the printing surface.
- Take care not to mark or stain the printing surface of the transparencies with fingerprints, dust, or oil. This may result in poor print quality.
- A label that can be loaded in the cassette is a standard type (label standard card) only. Set any type of labels other than the standard type (label standard card) in the manual feed slot.

5 Load the paper stack so that the rear edges touch the paper guide.

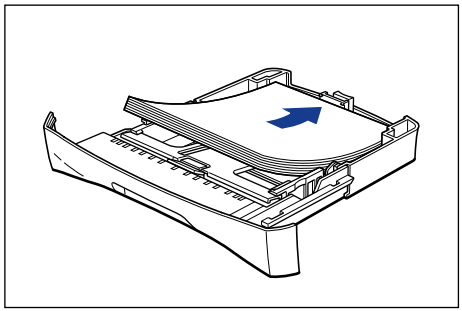

CAUTION

When loading paper, be careful not to cut your hands with the edges of the paper.

IMPORTANT

- Make sure that the paper guide is at the appropriate position of paper size. If the paper guide is not adjusted properly, this may result in misfeeds.

- Double-feeding may occur frequently if the cutting edges of the paper stack are not smooth. In this case, thoroughly fan the paper stack, and then align the edges of the paper stack on a flat surface.

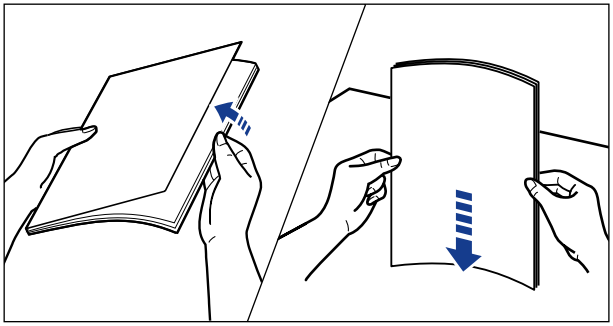

NOTE

To print on letterhead paper or paper printed with a logo, load the paper so that the printing surface faces down and the top edge comes toward the front of the cassette.

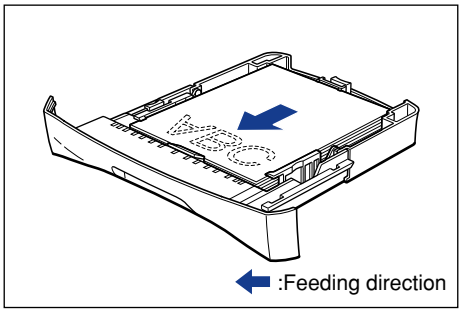

6 Press down the paper stack as shown in the figure, then make sure that it does not exceed the load limit mark and that it is loaded under the hooks on the paper guides.

Make sure that there is sufficient space between the hooks and paper stack. Take out some paper when there is no space.

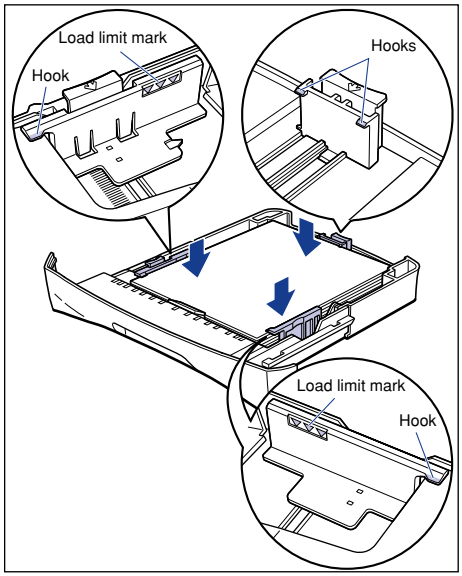

IMPORTANT

The following shows the cassette capacity. Be sure that the paper stack does not exceed the load limit mark of the paper guide. If the paper stack exceeds the load limit mark, this may result in misfeeds.

- Plain paper	Approx. 250 sheets (64 g/m^2)
- Heavy paper	Approx. 100 sheets (128 g/m^2)
- Transparency	Approx. 100 sheets
- Label (label standard card)	Approx. 100 sheets

7 Set the cassette in the printer.

Push the cassette into the printer firmly until the front surface of the cassette is flush with that of the printer.

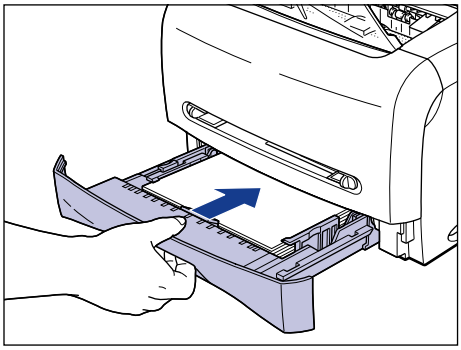

Setting Paper in the Manual Feed Slot

Follow the procedure below to set paper in the manual feed slot.

When loading paper in the manual feed slot, be sure to load it in portrait orientation.

IMPORTANT

- In the manual feed slot, you can set only one sheet of paper at a time.
- You cannot specify multiple print copies or multiple pages when you use the manual feed slot. If you specify multiple print copies or multiple pages using the manual feed slot, the second sheet thereafter is fed from the cassette regardless of paper size or type.
- Do not touch the paper in the manual feed slot or pull it out while printing. This may result in a faulty operation.
- If heavy paper in weight of 129 g/m^2 or over is printed on, the print quality may deteriorate.

1 Slide the paper guides to the mark of the desired paper size.

The paper guides move together.

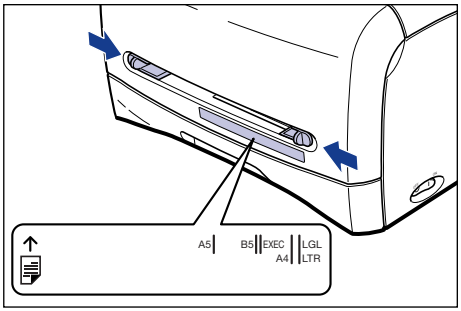

NOTE

"LGL" indicated in the manual feed slot shows legal size, "LTR" shows letter size, and "EXEC" shows executive size.

2 While holding paper with your hands as shown in the figure, slowly insert paper with the printing surface face up until it hits on the back.

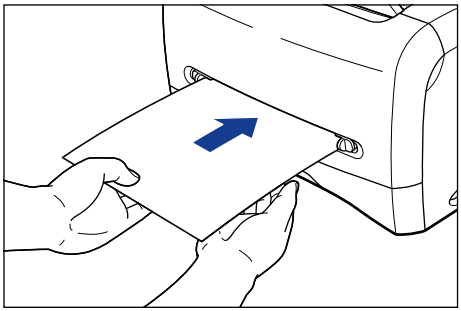

After paper is set, it is fed slightly.

CAUTION

When setting paper, be careful not to cut your hands with the edges of the paper.

IMPORTANT

- Set the paper straight.
- If the paper is curled or folded at corners, flatten it before setting.
- Be sure to align the paper guides with the width of the paper. If the paper guides are too loose or too tight, this may result in misfeeds or paper jams.

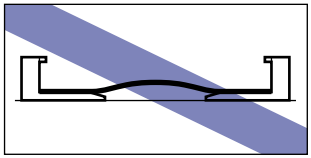

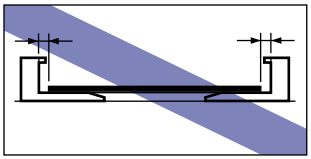

NOTE

To print on letterhead paper or paper printed with a logo, set the paper so that the printing surface faces up and the top edge comes toward the back of the manual feed slot.

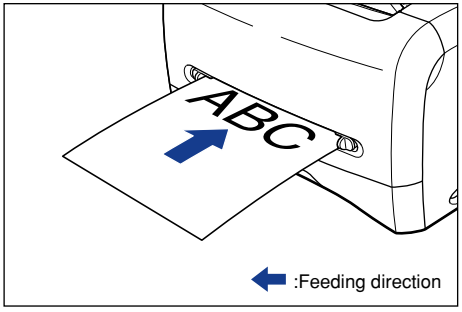

Setting Printer Driver and Printing

Follow the procedure below to set the printer driver.

1 **Select [Print] in the application. Select this printer for [Name] and click [Properties].**

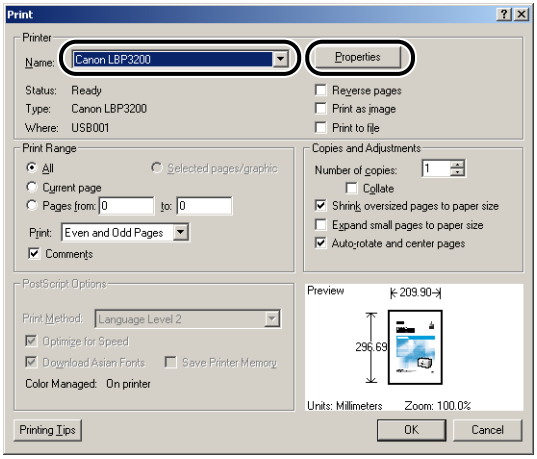

2 Display the [Page Setup] sheet, then from [Page Size], select the size of a document that you created in the application.

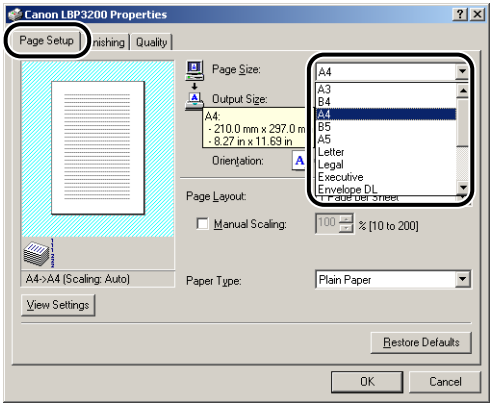

3 From [Output Size], select the size of the loaded paper as needed.

Select [A4] or [Letter] for printing on transparencies or labels.

If the size of a document is the same as that of paper set in the cassette or manual feed slot, select [Match Page Size].

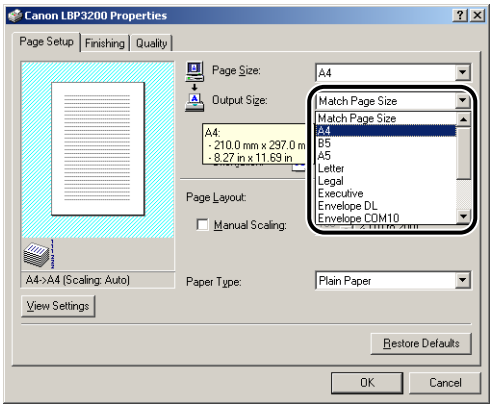

IMPORTANT

If the settings are different between [Page Size] and [Output Size], the printer produces an enlarged or reduced print automatically.

4 From [Paper Type], select the type of paper that you loaded.

Select [Plain Paper] for using plain paper, [Heavy Paper] for heavy paper or labels, and [Transparencies] for transparencies.

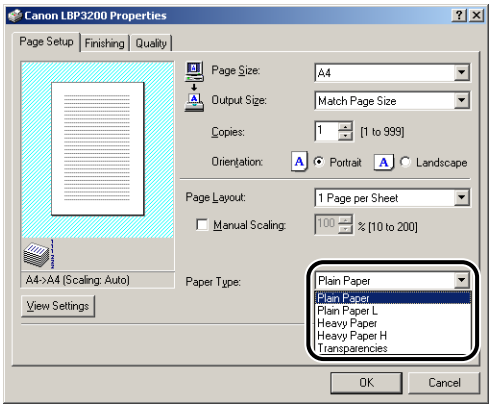

NOTE

- If paper curls excessively when printed with [Plain Paper] selected, select [Plain Paper L].
- If print fixing is not sufficient when printed with [Heavy Paper] selected, select [Heavy Paper H].

5 Click [OK] to close the [Properties] dialog box.

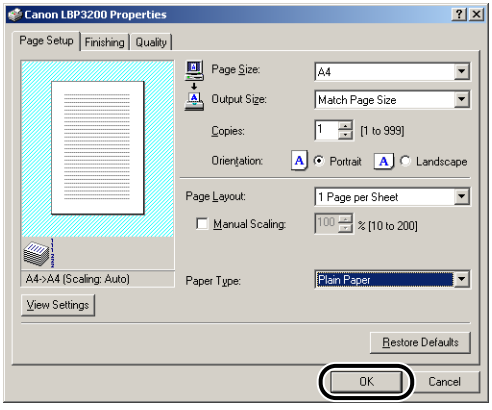

6 Click [OK] to start printing.

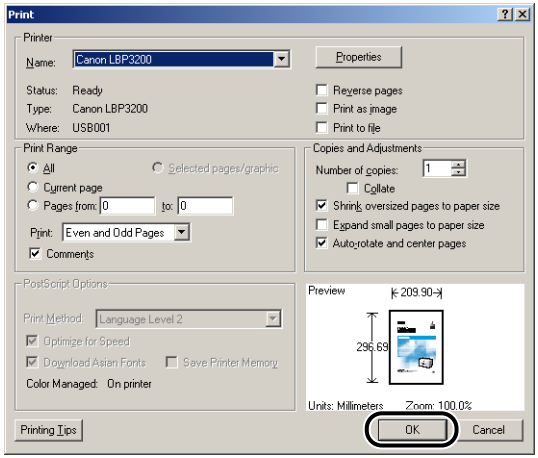

Printing on Envelope

This section describes the procedure for printing on envelopes.

Loading Envelope

The paper sources in which you can load envelopes are the cassette and the manual feed slot. For continuous print, load envelopes in the cassette.

For printing on one envelope that differs in type from paper in the cassette, set it in the manual feed slot.

IMPORTANT

- Before printing on envelopes that are fed from the cassette, make sure that paper is not set in the manual feed slot. If paper is set in the manual feed slot, the paper in the manual feed slot is fed first.
- Do not set paper in the manual feed slot while printing is being made with envelopes fed from the cassette. If you do so, the paper in the manual feed slot is fed, resulting in double-feeds or paper jams.
- Printing speed drops when printing on envelops.
- The following shows the usable envelopes for this printer.

Envelope DL
110.0 mm x 220.0 mm
(4.33 inch x 8.66 inch)

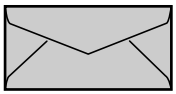

Envelope Monarch
98.5 mm x 190.5 mm
(3.88 inch x 7.50 inch)

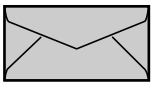

Envelope COM10
104.9 mm x 241.3 mm
(4.13 inch x 9.50 inch)

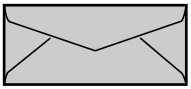

Envelope C5
162.0 mm x 229.0 mm
(6.38 inch x 9.02 inch)

* Envelopes with a flap on the short edge cannot be used.

- Do not use the following types of envelopes. Using inappropriate envelopes may result in paper jams that are difficult to clear or may result in damaging the printer.
  - Envelopes with fasteners or snaps
  - Envelopes with address windows
  - Envelopes with adhesive on the surface

- Wrinkled or creased envelopes
- Poorly manufactured envelopes in which the glued parts are uneven.
- Irregularly-shaped envelopes

• Before loading the envelopes, flatten the stack of envelopes to release any remaining air, and press the fold lines at edges tightly.
• Do not print on the back of an envelope.

Loading Envelope in the Cassette

Follow the procedure below to load envelopes in the cassette.

Load envelopes lengthways in the cassette.

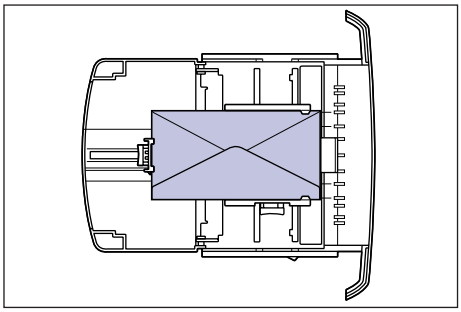

IMPORTANT

• Do not take the cassette out of the printer while printing. It may result in paper jams or printer malfunction.
• If you refill the cassette when a few envelopes still remain, take out the loaded envelopes once, then align the envelopes to be refilled and taken out envelopes together.
• Do not touch the black rubber pad in the cassette. If you touch it, this may result in misfeeds.

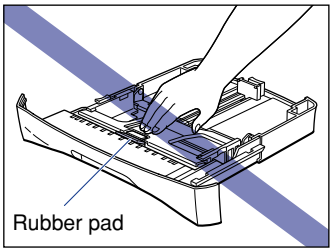

- Do not lift the cassette by holding only the rear part of the cassette. If you do so, the rear part of the cassette may come off.

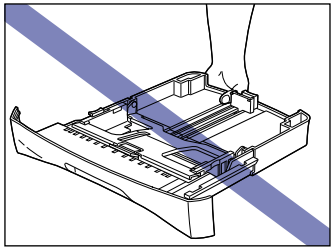

1 Pull out the cassette.

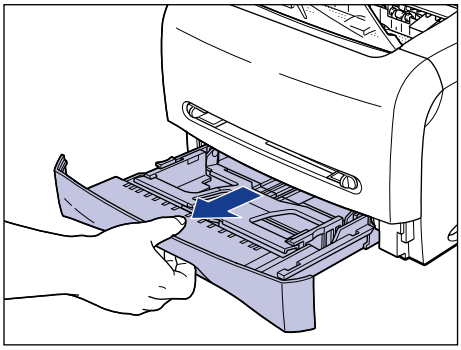

2 While holding the lock release lever on the paper guide at the rear of the cassette, slide the paper guide to the mark indicating the desired paper size.

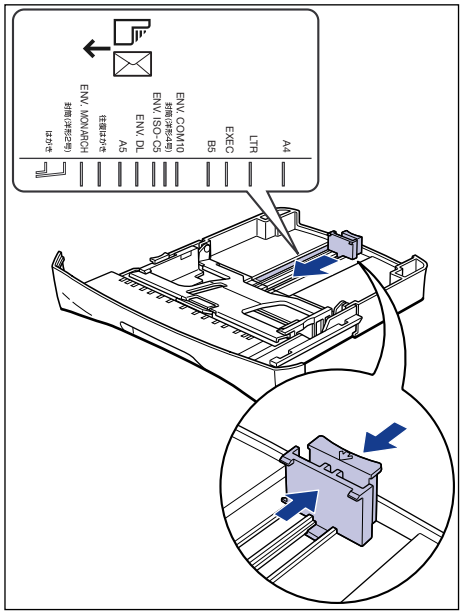

NOTE

The following shows the abbreviations of the paper size that are indicated on the paper guide.

Paper Size	Paper Guide
Envelope C5	ENV. ISO-C5
Envelope COM10	ENV. COM10
Envelope DL	ENV. DL
Envelope Monarch	ENV. MONARCH

3 **Place the stack of envelopes on a flat surface, flatten them to release any remaining air, and press the fold lines at edges tightly.**

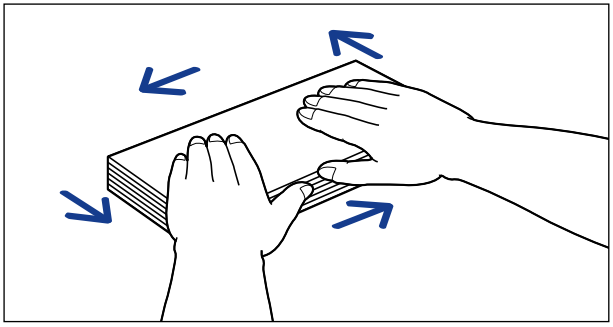

CAUTION

Be careful not to cut your hands with the edges of the envelopes.

4 **Loosen the hard corners of the envelopes and flatten curls as shown in the figure.**

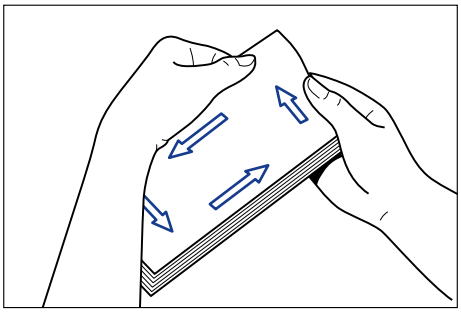

5 **Align the edges of the envelopes on a flat surface.**

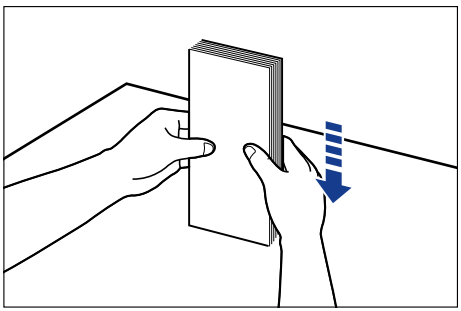

6 Load the envelopes so that the rear edges of the envelopes touch the paper guide.

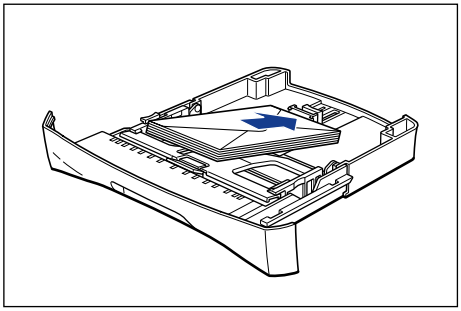

CAUTION

When loading envelopes, be careful not to cut your hands with the edges of the envelopes.

IMPORTANT

- Make sure that the paper guide is at the appropriate position of paper size. If the paper guide is not adjusted properly, this may result in misfeeds.
- The back of an envelope cannot be printed on.

NOTE

To print on an envelop, load the envelope so that the printing surface faces down and the flap comes toward the left of the cassette.

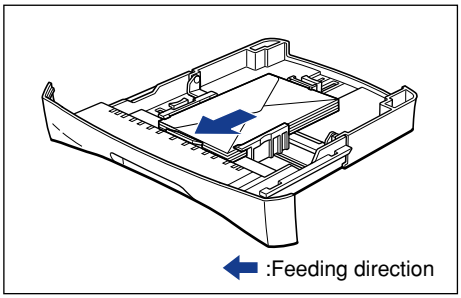

7 While holding the lock release lever on the paper guide at either side of the cassette, slide the paper guide to the mark indicating the desired envelope size.

The paper guides on the sides of the cassette move together.

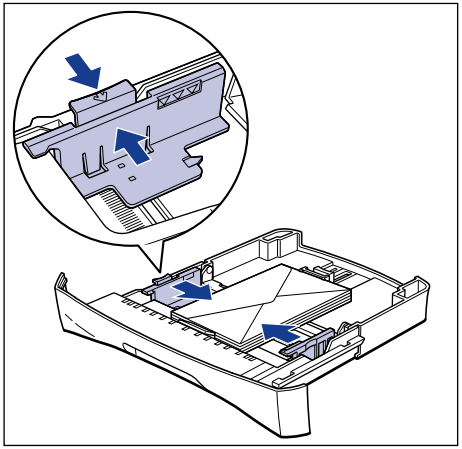

IMPORTANT

Be sure to align the paper guides with the width of the envelopes. If the paper guides are too loose or too tight, this may result in misfeeds or paper jams.

8 Press down the envelopes as shown in the figure, then make sure that they do not exceed the load limit mark and that they are loaded under the hooks on the paper guides.

Make sure that there is sufficient space between the hooks and envelopes. Take out some envelopes when there is no space.

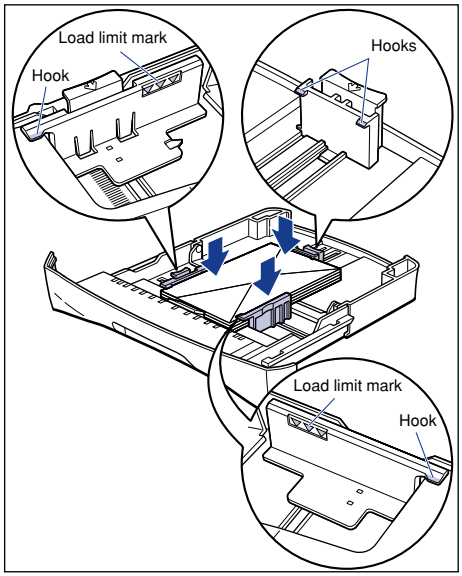

IMPORTANT

A maximum of approx. 20 envelopes can be loaded in the cassette. Be sure that the envelopes do not exceed the load limit mark of the paper guide. If the envelopes exceed the load limit mark, this may result in misfeeds.

9 Set the cassette in the printer.

Push the cassette into the printer firmly until the front surface of the cassette is flush with that of the printer.

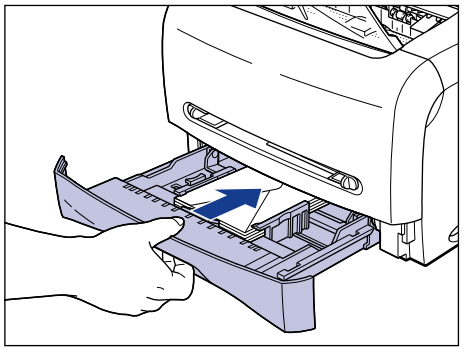

Setting Envelope in the Manual Feed Slot

Follow the procedure below to set an envelope in the manual feed slot.

When loading paper in the manual feed slot, be sure to load it in portrait orientation.

IMPORTANT

- In the manual feed slot, you can set only one envelope at a time.
- You cannot specify multiple print copies or multiple pages when you use the manual feed slot. If you specify multiple print copies or multiple pages using the manual feed slot, the second sheet thereafter is fed from the cassette regardless of paper size or type.
- Do not touch the envelope in the manual feed slot or pull it out while printing. This may result in a faulty operation.

1 **Insert about 2 cm of the edge of an envelope into the manual feed slot ①, then slide the paper guides aligning with the width of the envelope ②.**

The paper guides move together.

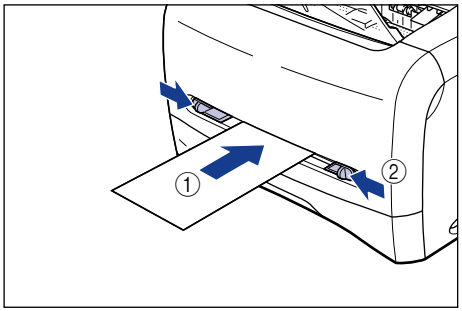

IMPORTANT

- Be sure to align the paper guides with the width of the envelopes. If the paper guides are too loose or too tight, this may result in misfeeds or paper jams.

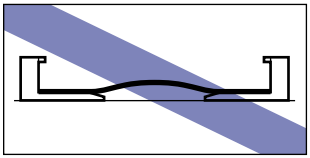

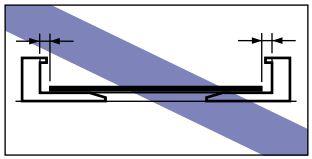

2 While holding the envelope with your hands as shown in the figure, slowly insert the envelope with the printing surface face up until it hits on the back.

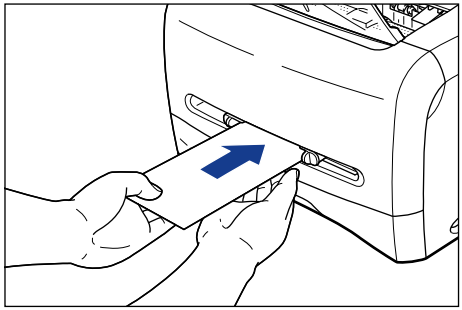

After the envelope is set, it is fed slightly.

CAUTION

When setting the envelope, be careful not to cut your hands with the edges of the envelope.

IMPORTANT

- Set envelops straight.
- If the envelopes are curled or folded at corners, flatten them before setting.
- The back of an envelope cannot be printed on.

NOTE

To print on an envelop, set the envelope so that the printing surface faces up and the flap comes toward the left of the manual feed slot.

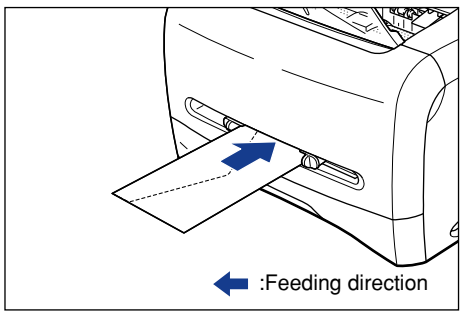

Setting Printer Driver and Printing

Follow the procedure below to set the printer driver.

1 **Select [Print] in the application. Select this printer for [Name] and click [Properties].**

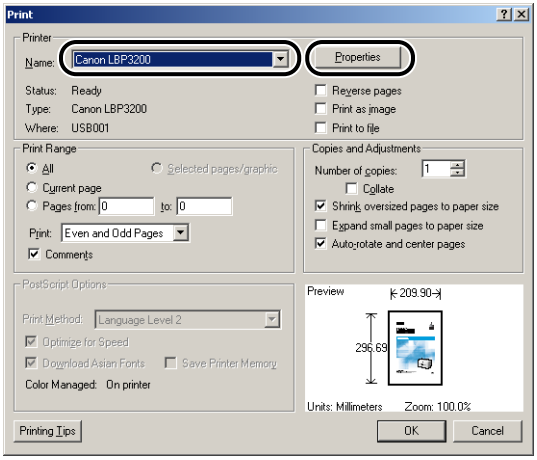

2 **Display the [Page Setup] sheet, then from [Page Size], select the size of a document that you created in the application.**

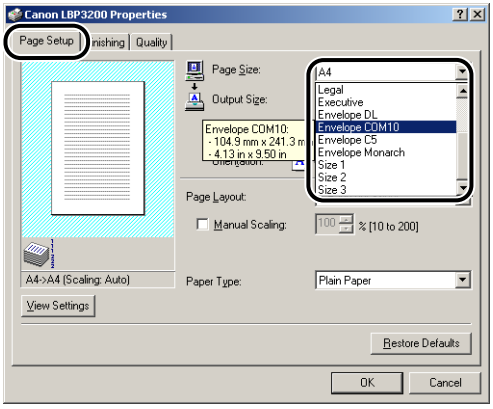

NOTE

If you select any of [Envelope C5], [Envelope COM10], [Envelope DL], [Envelope Monarch] for [Page Size], the appropriate paper type is automatically set as long as [Match Page Size] is selected for [Output Size]. So, you do not have to set [Paper Type].

3 From [Output Size], select the size of the loaded paper as needed.

If the size of a document is the same as that of paper set in the cassette or manual feed slot, select [Match Page Size].

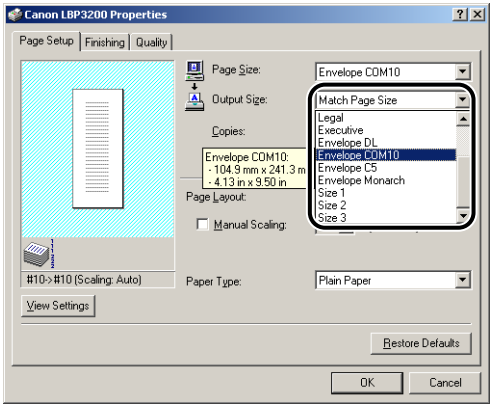

IMPORTANT

If the settings are different between [Page Size] and [Output Size], the printer produces an enlarged or reduced print automatically.

NOTE

If you select any of [Envelope C5], [Envelope COM10], [Envelope DL], [Envelope Monarch] for [Output Size], the appropriate paper type is automatically set. So, you do not have to set [Paper Type].

4 Click [OK] to close the [Properties] dialog box.

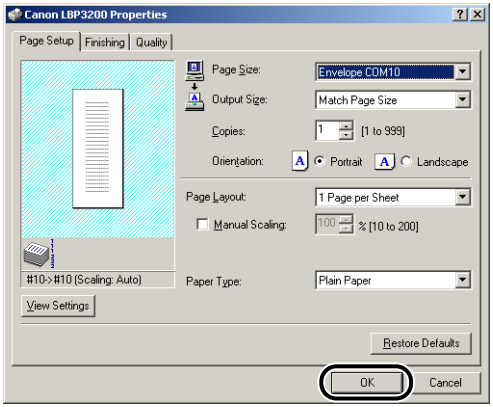

5 Click [OK] to start printing.

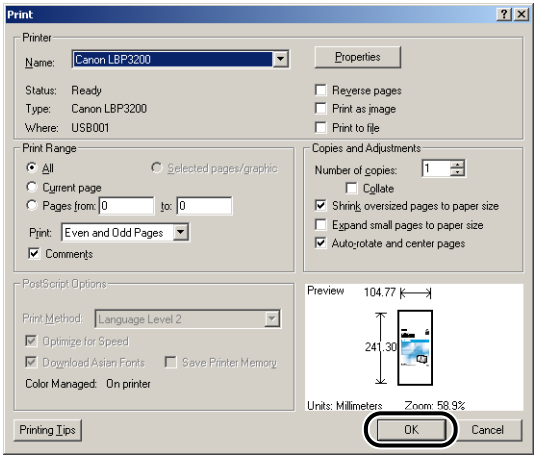

Printing on Custom Paper

This section describes the procedure for printing on custom paper.

Loading Custom Paper

Follow the procedure below to set custom paper. In the manual feed slot, you can set custom paper in width of 76.2 to 215.9 mm and in length of 127.0 to 355.6 mm.

The paper source in which you can set custom paper is the manual feed slot only. You cannot load custom paper in the cassette.

When loading paper in the manual feed slot, be sure to load it in portrait orientation.

IMPORTANT

- Do not load jagged-edged, creased, or extremely curled paper. It may result in paper jams or printer malfunction.
- For more details on usable paper, see "Usable Paper," on p. 2-2.
- In the manual feed slot, you can set only one sheet of paper at a time.
- You cannot specify multiple print copies or multiple pages when you use the manual feed slot. If you specify multiple print copies or multiple pages using the manual feed slot, the second sheet thereafter is fed from the cassette regardless of paper size or type.
- Do not touch the paper in the manual feed slot or pull it out while printing. This may result in a faulty operation.
- If heavy paper in weight of 129 g/m^2 or over is printed on, the print quality may deteriorate.

1 Insert about 2 cm of the edge of paper into the manual feed slot ①, then slide the paper guides aligning with the width of the paper ②.

The paper guides move together.

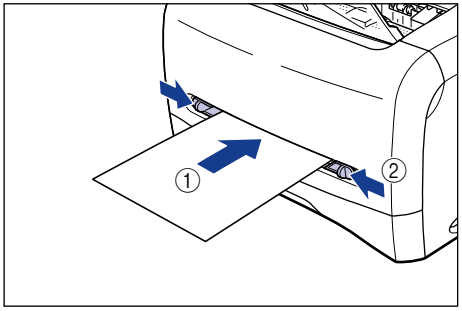

IMPORTANT

- Be sure to align the paper guides with the width of the paper. If the paper guides are too loose or too tight, this may result in misfeeds or paper jams.

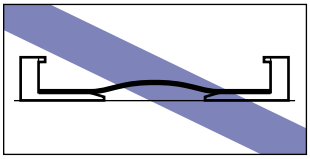

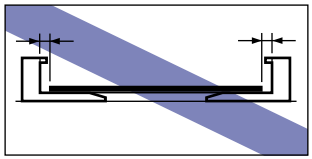

2 While holding paper with your hands as shown in the figure, insert paper with the printing surface face up until it hits on the back.

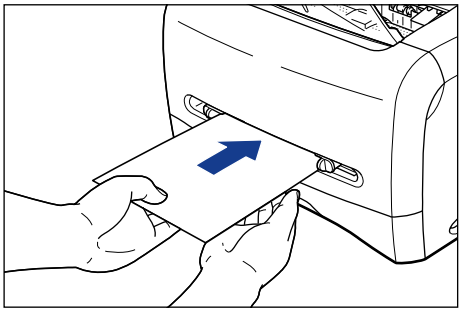

After paper is set, it is fed slightly.

CAUTION

When setting paper, be careful not to cut your hands with the edges of the paper.

IMPORTANT

- Set the paper straight.
- If the paper is curled or folded at corners, flatten it before loading.

NOTE

To print on letterhead paper or paper printed with a logo, set the paper so that the printing surface faces up and the top edge comes toward the back of the manual feed slot.

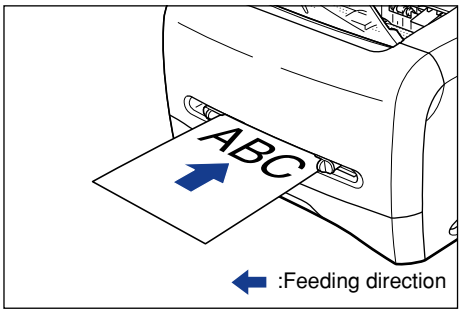

Setting Printer Driver and Printing

Follow the procedure below to set the printer driver.

1 **Select [Print] in the application. Select this printer for [Name] and click [Properties].**

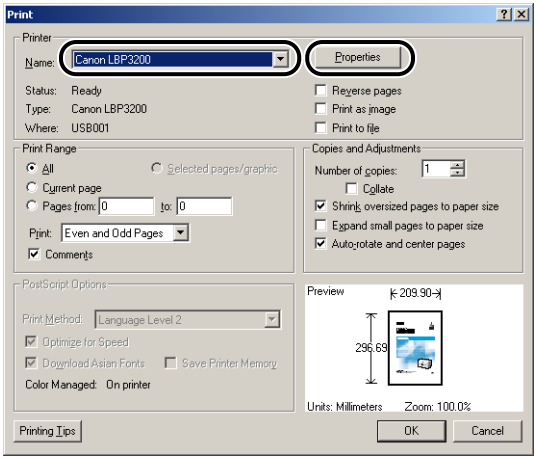

2 **Display the [Page Setup] sheet, then from [Page Size], select the size of a document that you created in the application.**

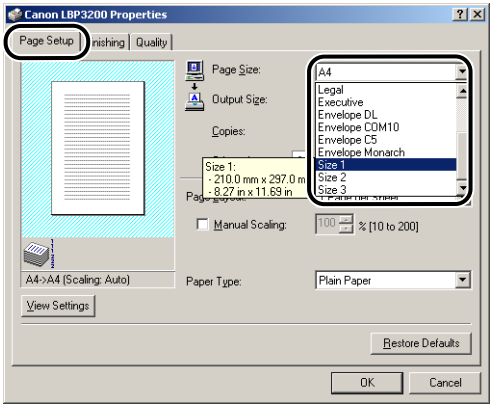

NOTE

In order to use the custom paper, you have to register the custom paper size in advance. For instructions on registering the custom paper size, see "Specifying a Custom Paper Size," on p. 4-36.

3 From [Output Size], select the name (size) of the set custom paper as needed.

If the size of a document is the same as that of paper (custom paper name) set in the manual feed slot, select [Match Page Size].

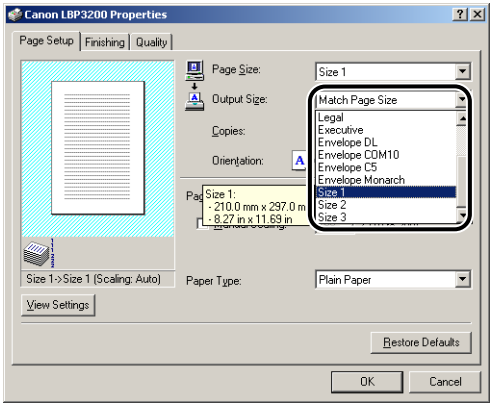

IMPORTANT

If the settings are different between [Page Size] and [Output Size], the printer produces an enlarged or reduced print automatically.

4 From [Paper Type], select the type of paper that you set.

Select [Plain Paper] for using plain paper, [Heavy Paper] for heavy paper.

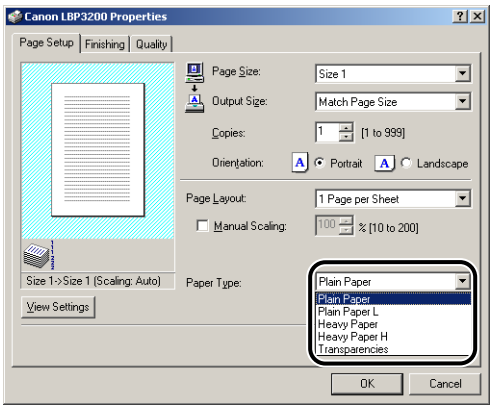

NOTE

- If paper curls excessively when printed with [Plain Paper] selected, select [Plain Paper L].
- If print fixing is not sufficient when printed with [Heavy Paper] selected, select [Heavy Paper H].

5 Click [OK] to close the [Properties] dialog box.

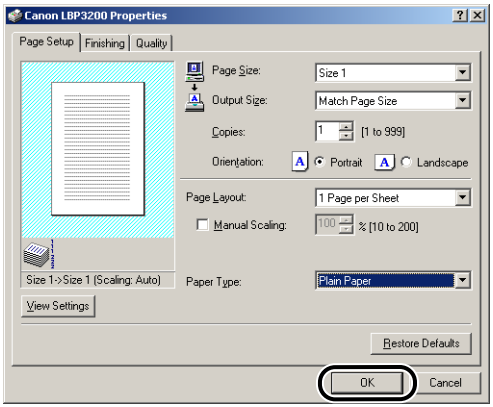

6 Click [OK] to start printing.

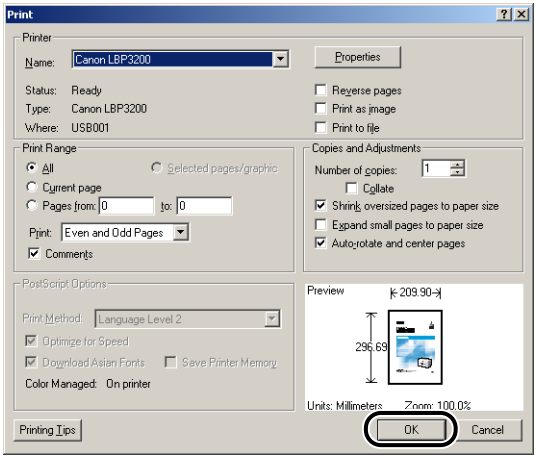

Setting Up the Printing Environment

3

CHAPTER

This chapter describes the procedure for installing the printer driver in a computer and specifying the settings when using this printer in a network environment.

Introduction 3-2

After Installing the Printer 3-2

Steps for Printing to be Followed Each Time 3-2

Required System Environment 3-2

Installing the CAPT Software 3-4

For Windows 98/Me 3-4

For Windows 2000 3-16

For Windows XP 3-22

After Completing Installation (Canon LBP3200 Group) 3-28

Printing a Test Page 3-32

Using the Printer on a Network. 3-35

Setting the Print Server. 3-36

Installation on the Clients 3-45

Uninstalling the CAPT Software 3-49

Introduction

After Installing the Printer

The following shows work that should be performed after installing the printer.

■ Installing the printer driver (See p. 3-4.)

The printer driver is software required for printing from an application you use. Specify the print settings in the printer driver.

■ Setting a network environment (See p. 3-35.)

If you operate this printer in a network using the computer's sharing function, you must specify the settings for the computer and install the printer driver in the client computers.

Steps for Printing to be Followed Each Time

The following shows the work that should be performed each time you print.

■ Specifying printing preferences

Specify the paper size, document size, and print copies in the printer driver. If you do not specify these printing preferences properly, you may not obtain an accurate print.

■ Performing a print job

Select the print menu from the application. This procedure differs depending on the application you use. See the instruction manual supplied with your application.

Required System Environment

The following system environment is required to use the printer driver.

■ Operating system software environment

- Microsoft Windows 98/Me
- Microsoft Windows 2000 Server/Professional
- Microsoft Windows XP Professional/Home Edition

- System Requirements (minimum required)

	Windows 98/Me	Windows 2000/XP
CPU	PentiumII 300 MHz or higher	PentiumII 300 MHz or higher
Memory (RAM)*	64 MB or more	128 MB or more
Hard Disk	15 MB or more	15 MB or more

(PC/AT compatibles)

* As the amount of memory that can be actually used differs depending on the system configuration of your computer or your application, the above environment does not guarantee printing in any case.

- System Requirements (recommended)

	Windows 98/Me	Windows 2000/XP
CPU	PentiumIII 600 MHz or higher	PentiumIII 600 MHz or higher
Memory (RAM)	128 MB or more	256 MB or more

■ Interface Environment

• USB:USB Full-Speed (USB1.1 equivalent)

NOTE

When using Sound, a PC synthesizer (and the driver for PCM synthesizer) must be installed in your computer. Do not use a PC Speaker driver (such as speaker.drv).

Installing the CAPT Software

This section describes the procedure for installing the CAPT software when connecting this printer to your computer directly.

IMPORTANT

- The CAPT software is required for printing with this printer. Be sure to install the CAPT software.
- When there is not enough free hard disk space, the dialog box shown below appears during installation.
  In this case, click [OK] to stop the installation and increase the free space, then install the CAPT software again.

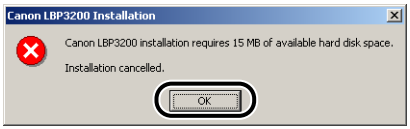

NOTE

When using this printer in a network, see "Using the Printer on a Network," on p. 3-35.

For Windows 98/Me

NOTE

The screen shots used in this section are from Windows Me.

Installing from the CD-ROM

1 Make sure that the power switch is turned OFF.

IMPORTANT

Do not turn ON the printer until Step 10 during installation procedure.

2 Connect the printer to the computer with the USB cable.

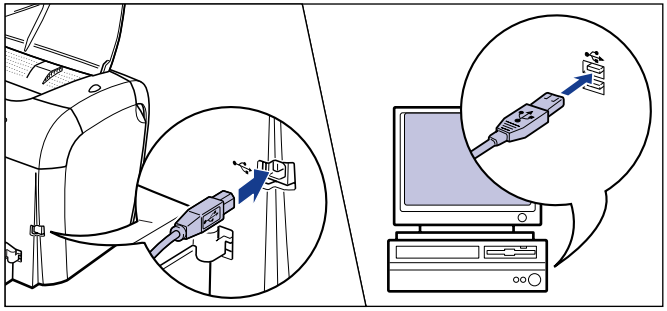

3 Turn ON the computer and start up Windows 98/Me.

4 Put the supplied "User Software for LBP3200" CD-ROM into the CD-ROM drive.

If the CD-ROM is already set in the drive, take it out and put it into again.

The CD-ROM menu will appear automatically.

NOTE

If the CD-ROM menu does not appear automatically, select [Run] under the [Start] menu, enter "D:\English\CAP4MNU.exe", and click [OK]. (The CD-ROM drive name is indicated as "D:" in this manual. The CD-ROM drive name may differ depending on the computer being used.)

5 Click [Install a Printer Driver].

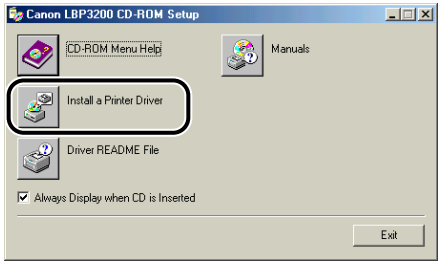

The dialog box for confirming the language will appear.

6 Confirm the language and click [OK].

After the preparation for installation is completed, the CAPT (Canon Advanced Printing Technology) software installer will start up.

The [Welcome] dialog box will appear.

7 Click [Next].

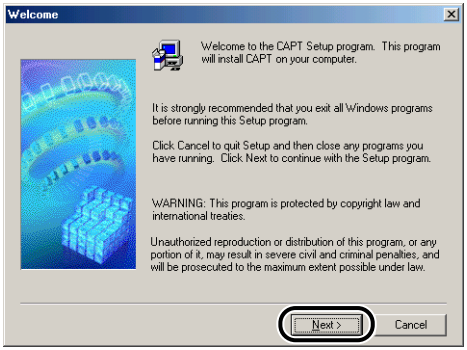

The [Software License Agreement] dialog box will appear.

8 Confirm the contents of the software license agreement, then click [Yes].

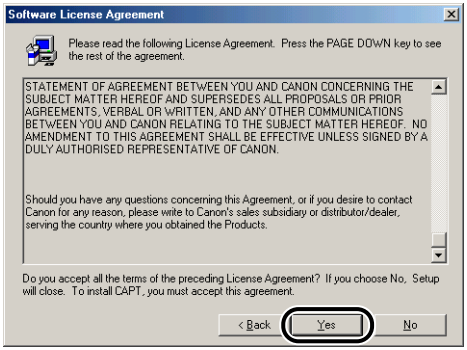

9 Select [Automatic Detection (recommend)] and click [Next].

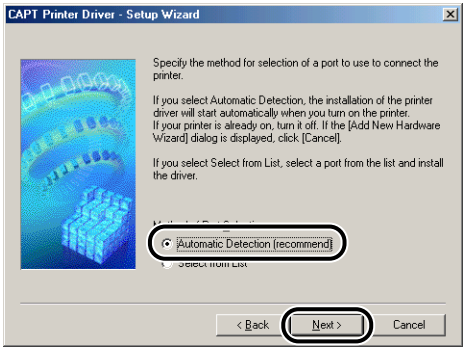

10 Click [OK], then press "|" of the power switch to turn ON the printer.

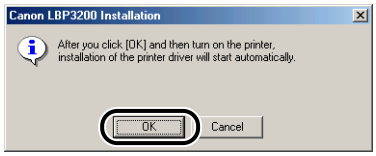

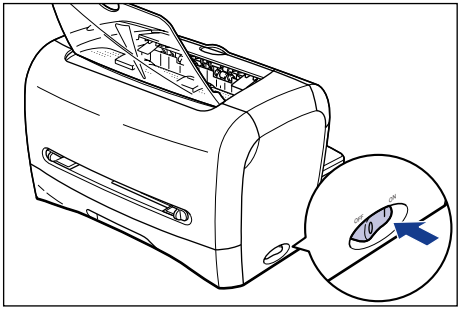

Installation of the printer driver and the USB class driver will start automatically.

11 After the installation is completed, click [OK].

The installation of the USB class driver and the printer driver is completed.

Installing with Plug and Play

IMPORTANT

Before installing the CAPT software with Plug and Play, make sure that the printer is properly connected to your computer and that the printer is turned ON.

1 Turn ON the computer and start up Windows 98/Me.

The [Add New Hardware Wizard] dialog box will appear.

● **For Windows Me**

If the following dialog box appears, proceed to Step 2.

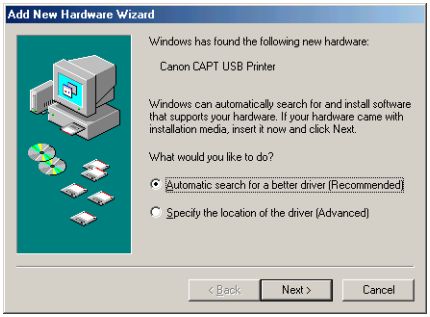

If the following dialog box appears, proceed to Step 9.

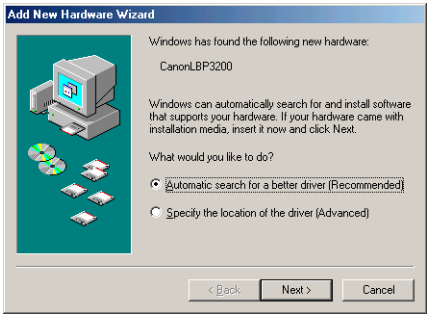

● For Windows 98

If the following dialog box appears, click [Next], then proceed to Step 2.

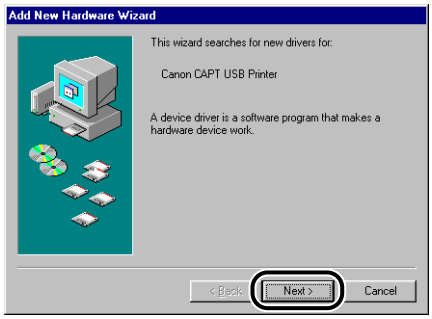

If the following dialog box appears, click [Next], then proceed to Step 9.

2 Select [Specify the location of the driver (Advanced)], then click [Next].

If you are using Windows 98, select [Search for the best driver for your device. (Recommended).].

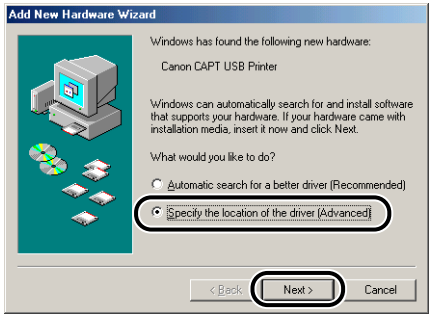

The dialog box for specifying the search location will appear.

3 Put the supplied "User Software for LBP3200" CD-ROM into the CD-ROM drive.

4 Select [Search for the best driver for your device. (Recommended).], remove a checkmark from [Removable Media (Floppy, CD-ROM…)] and place a checkmark for [Specify a location].

If you are using Windows 98, remove a checkmark from [Floppy disk drives] and [CD-ROM drive], and place a checkmark for [Specify a location].

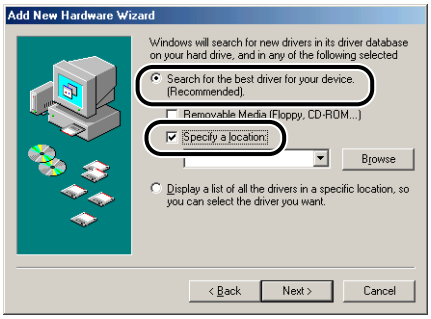

5 Click [Browse], then select a folder.

If your CD-ROM drive is drive [D:], select [D:\English\WinMe], and then click [OK].
If you are using Windows 98, and your CD-ROM drive is drive [D:], select [D:\English\Win98], then click [OK].

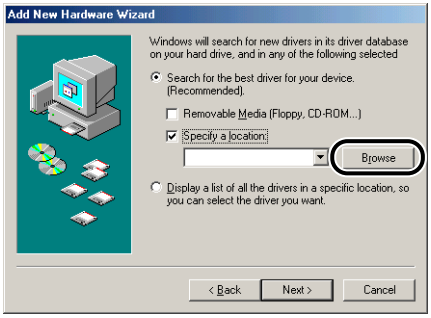

6 Make sure that the correct folder is displayed in [Specify a location], and then click [Next].

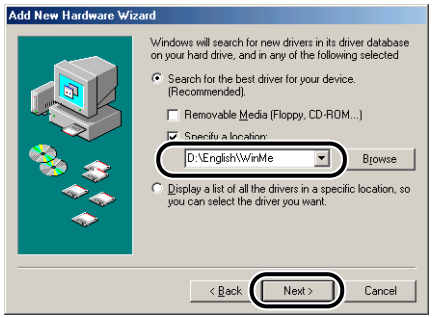

7 Click [Next].

Installation of the USB class driver will start.

8 Click [Finish].

The printer driver will be detected automatically. Please wait until it is completed.
The [Add New Hardware Wizard] dialog box will appear.
If you are using Windows 98, click [Next].

9 Select [Specify the location of the driver (Advanced)], then click [Next].

If you are using Windows 98, select [Search for the best driver for your device. (Recommended).].

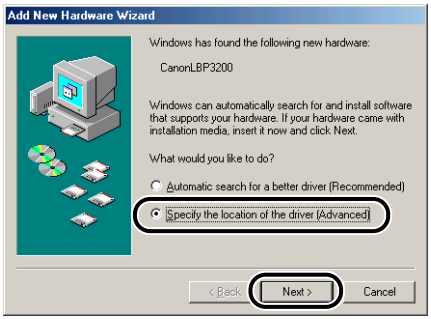

The dialog box for specifying the search location will appear.

10 If the supplied "User Software for LBP3200" CD-ROM is not in the CD-ROM drive, put it into the CD-ROM drive.

11 Select [Search for the best driver for your device. (Recommended).], remove a checkmark from [Removable Media (Floppy, CD-ROM…)] and place a checkmark for [Specify a location].

If you are using Windows 98, remove a checkmark from [Floppy disk drives] and [CD-ROM drive], and place a checkmark for [Specify a location].

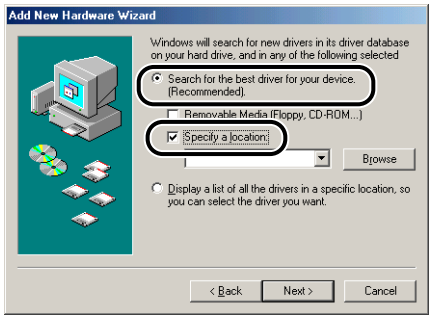

12 Click [Browse], then select a folder.

If your CD-ROM drive is drive [D:], select [D:\English\WinMe], and then click [OK].
If you are using Windows 98 and your CD-ROM drive is drive [D:], select [D:\English\Win98].

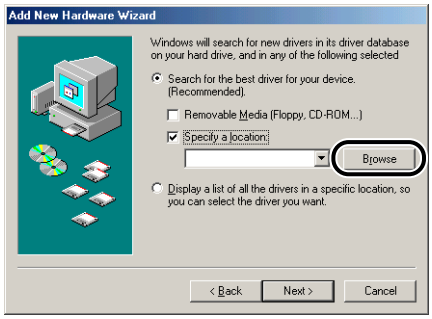

13 Make sure that the correct folder is displayed in [Specify a location], and then click [Next].

14 Click [Next].

15 Enter a new name in [Printer name] if you want to change the printer name.

If another printer driver has been already installed in the computer, the message <Do you want your Windows-based programs to use this printer as the default printer?> will appear. In this case, select [Yes] or [No].

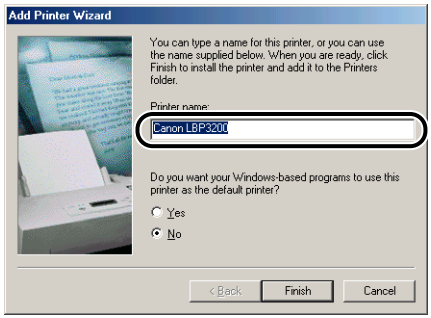

16 Click [Finish].

Copying files will be started.

17 When the dialog box for completing installation appears, click [OK].

The [Add New Hardware Wizard] dialog box will appear.

18 Click [Finish].

The installation of the USB class driver and the printer driver is completed.

Installing from the CD-ROM

1 Make sure that the power switch is turned OFF.

IMPORTANT

Do not turn ON the printer until Step 8 during installation procedure.

2 Connect the printer to the computer with the USB cable.

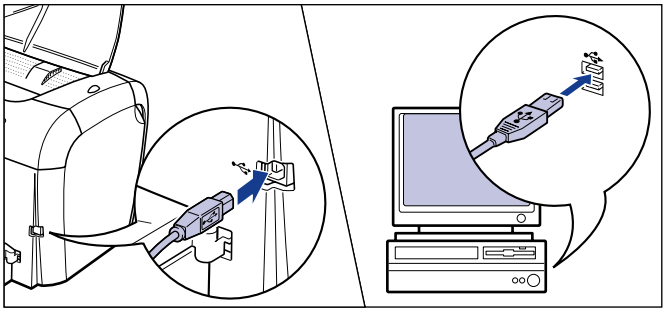

3 Turn ON the computer and start up Windows 2000.

4 Log on by a user who has an administrator's permission.

NOTE

Full Control Permission is required for the installation of the printer driver.

5 Put the supplied "User Software for LBP3200" CD-ROM into the CD-ROM drive.

If the CD-ROM is already set in the drive, take it out and put it into again.

The CD-ROM menu will appear automatically.

NOTE

If the CD-ROM menu does not appear automatically, select [Run] under the [Start] menu, enter "D:\English\CAP4MNU.exe", and click [OK]. (The CD-ROM drive name is indicated as "D:" in this manual. The CD-ROM drive name may differ depending on the computer being used.)

6 Click [Install a Printer Driver].

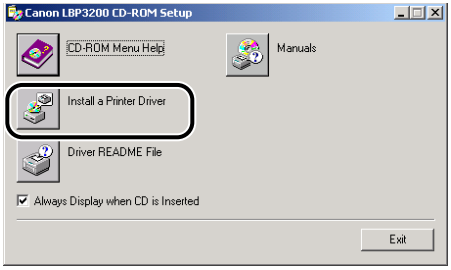

The dialog box for confirming the language will appear.

7 Confirm the language and click [OK].

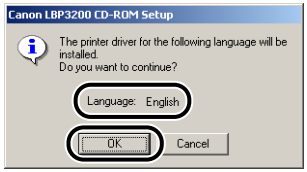

The preparation for installation will start.

8 When the screen shown below appears, turn ON the printer.

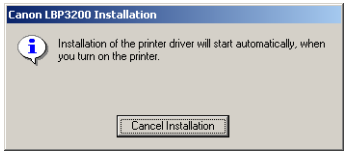

In order to turn ON the printer, press " I " of the power switch.

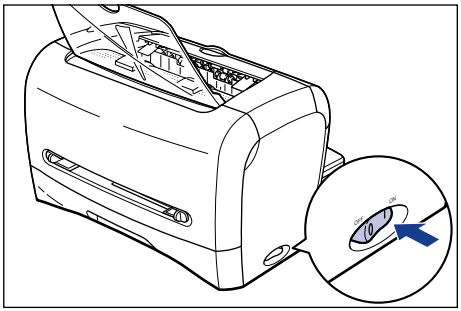

The installation of the printer driver and the USB class driver will start automatically.

9 When the screen shown below appears, click [OK].

The installation of the USB class driver and the printer driver is completed.

Installing with Plug and Play

IMPORTANT

Before installing the CAPT software with Plug and Play, make sure that the printer is properly connected to your computer and that the printer is turned ON.

1 Turn ON the computer and start up Windows 2000.

2 Log on by a user who has an administrator's permission.

NOTE

Full Control Permission is required for the installation of the printer driver.

3 Click [Next].

4 Select [Search for a suitable driver for my device (recommended)], then click [Next].

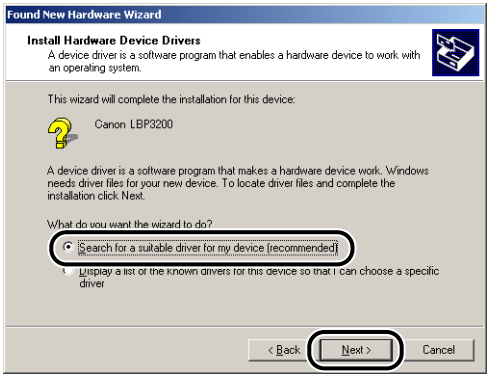

NOTE

[Unknown] may be displayed as the name of the device.

5 Remove a checkmark from [Floppy disk drives] and [CD-ROM drives], place a checkmark for [Specify a location], and then click [Next].

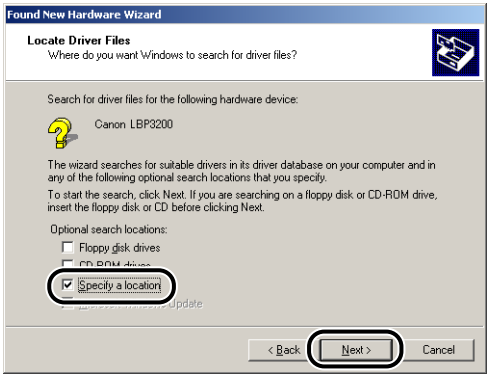

6 Put the "User Software for LBP3200" CD-ROM into the CD-ROM drive, then click [Browse].

7 If your CD-ROM drive is drive [D:], select [D:\English\Win2K_XP]. Select [CAP4STK.INF], then click [Open].

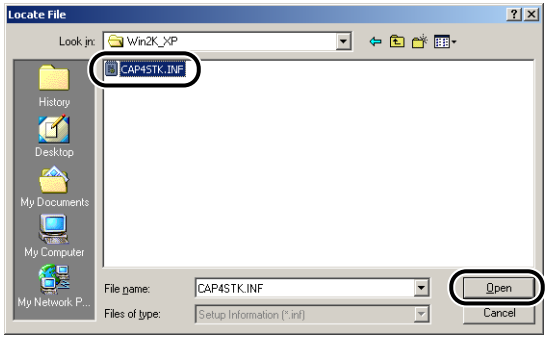

8 Make sure that the selected folder is displayed in [Copy manufacturer's files from], then click [OK].

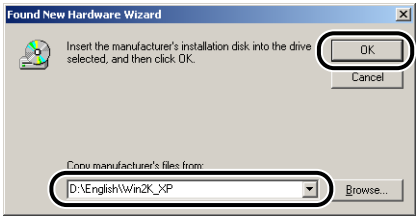

The dialog box for completing the search for a driver file will appear.

9 Click [Next].

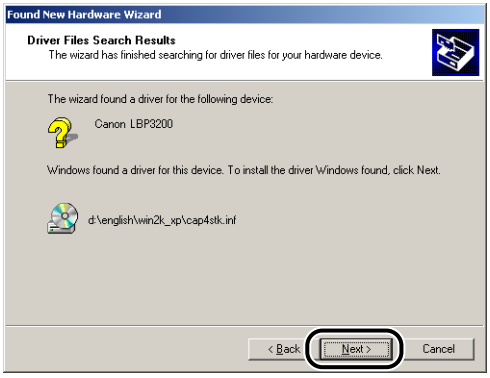

Copying files will be started.

NOTE

Click [Yes] if the [Digital Signature Not Found] dialog box is displayed.

10 When the screen shown below appears, click [OK].

The [Found New Hardware Wizard] dialog box will appear.

11 Click [Finish].

The installation of the USB class driver and the printer driver is completed.

Installing from the CD-ROM

1 Make sure that the power switch is turned OFF.

IMPORTANT

Do not turn ON the printer until Step 8 during installation procedure.

2 Connect the printer to the computer with the USB cable.

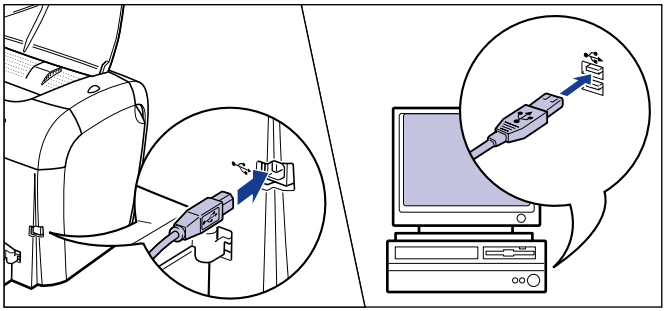

3 Turn ON the computer and start up Windows XP.

4 Log on by a user who has an administrator's permission.

NOTE

Full Control Permission is required for the installation of the printer driver.

5 Put the supplied "User Software for LBP3200" CD-ROM into the CD-ROM drive.

If the CD-ROM is already set in the drive, take it out and put it into again.

The CD-ROM menu will appear automatically.

NOTE

If the CD-ROM menu does not appear automatically, select [Run] under the [Start] menu, enter "D:\English\CAP4MNU.exe", and click [OK]. (The CD-ROM drive name is indicated as "D:" in this manual. The CD-ROM drive name may differ depending on the computer being used.)

6 Click [Install a Printer Driver].

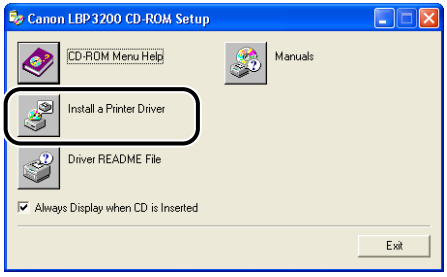

The dialog box for confirming the language will appear.

7 Confirm the language and click [OK].

The preparation for installation will start.

8 When the screen shown below appears, turn ON the printer.

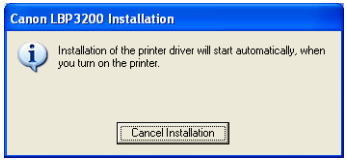

In order to turn ON the printer, press "I" of the power switch.

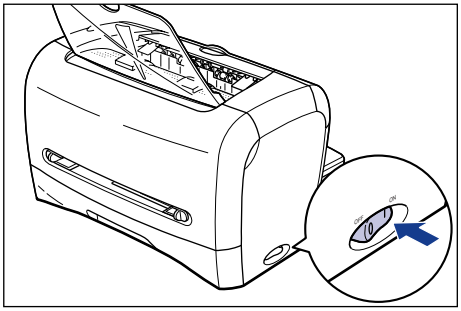

Installation of the printer driver and the USB class driver will start automatically.

9 When the screen shown below appears, click [OK].

IMPORTANT

Windows XP Service Pack 2 and other operating systems have the feature that blocks unauthorized access over the network to protect your computer (Windows Firewall). Because of this, you need to configure Windows Firewall to allow access when you are using the printer on an operating system that is equipped with Windows Firewall. (This configuration operation is only needed when using the printer in a network environment.) For details, refer to the file "note_ex.pdf" that is included in the [English] folder on the supplied "User Software for LBP3200" CD-ROM.

The installation of the USB class driver and the printer driver is completed.

Installing with Plug and Play

IMPORTANT

Before installing the CAPT software with Plug and Play, make sure that the printer is properly connected to your computer and that the printer is turned ON.

1 Turn ON the computer and start up Windows XP.

2 Log on by a user who has an administrator's permission.

NOTE

Full Control Permission is required for the installation of the printer driver.

3 Select [Install from a list or specific location (Advanced)], put the supplied "User Software for LBP3200" CD-ROM into the CD-ROM drive, then click [Next].

4 Select the search method and folder to browse.

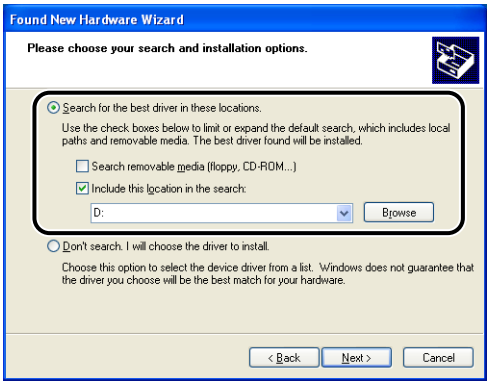

- ❑ Select [Search for the best driver in these locations].
- ❑ Remove a checkmark from [Search removable media (floppy, CD-ROM…)].
- ❑ Place a checkmark for [Include this location in the search].
- ❑ Click [Browse], then select a folder.

If your CD-ROM drive is drive [D:], select [D:\English\Win2K_XP].

- ❑ Click [OK].

5 Make sure that the selected folder is displayed in [Include this location in the search], then click [Next].

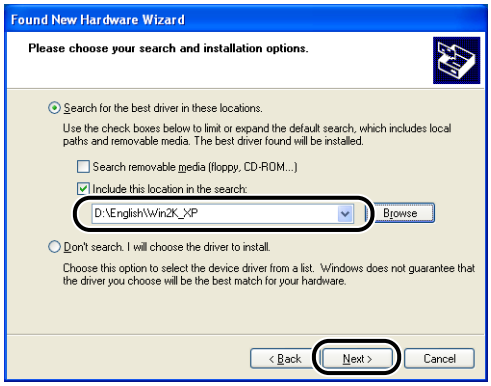

The installation process will be displayed.

NOTE

Click [Continue Anyway] if the [Hardware Installation] dialog box is displayed.

6 When the screen shown below appears, click [OK].

The [Found New Hardware Wizard] dialog box will appear.

7 Click [Finish].

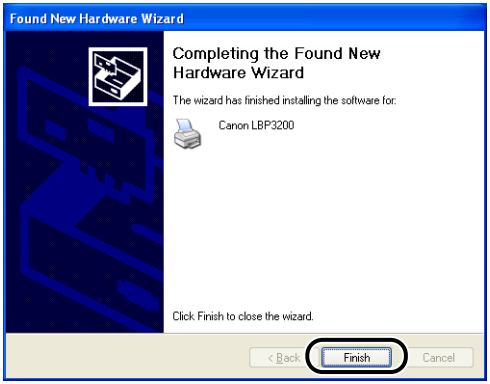

IMPORTANT

Windows XP Service Pack 2 and other operating systems have the feature that blocks unauthorized access over the network to protect your computer (Windows Firewall). Because of this, you need to configure Windows Firewall to allow access when you are using the printer on an operating system that is equipped with Windows Firewall. (This configuration operation is only needed when using the printer in a network environment.) For details, refer to the file "note_ex.pdf" that is included in the [English] folder on the supplied "User Software for LBP3200" CD-ROM.

The installation of the USB class driver and the printer driver is completed.

After Completing Installation (Canon LBP3200 Group)

When the installation of the CAPT software is completed, the icon and folder for [Canon LBP3200] group will be created.

■ For Windows 98/Me/2000

- The [Canon LBP3200] printer icon will be displayed in the [Printers] folder.

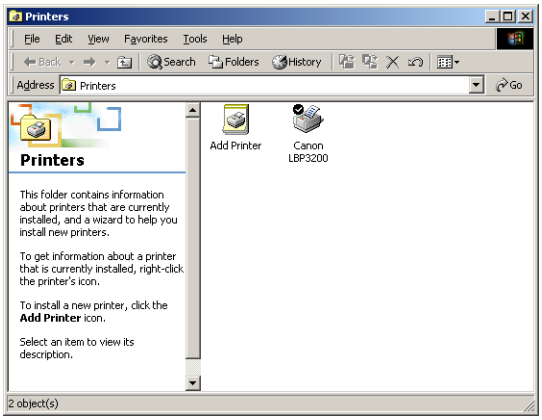

- The shortcut of the [Canon LBP3200] folder will be displayed on the desktop.

- The [Canon LBP3200] group will be added into [Programs] under the [Start] menu.

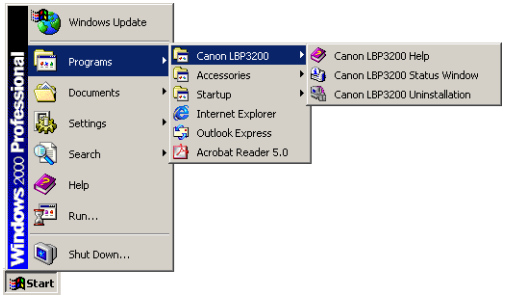

If you double-click the [Canon LBP3200] folder on the desktop, the icon for each of [Canon LBP3200] group will be displayed.

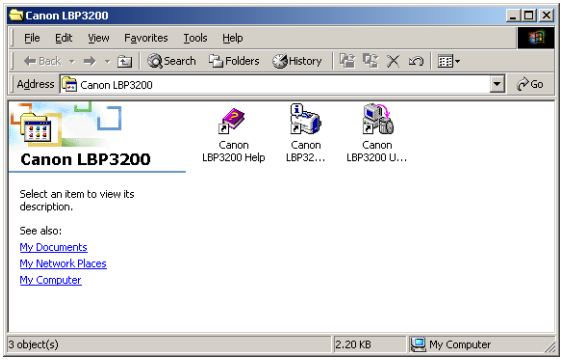

- Canon LBP3200 Uninstallation
  Used if you want to uninstall the CAPT software from your computer.
  To start up, double-click the icon. (See p. 3-49.)

- Canon LBP3200 Status Window
  Shows the printer or printing status with an animation or sound.
  You can pause or cancel the print job from this window.
  To display the Printer Status Window, click the Printer Status Window icon on the Windows taskbar, then click [Canon LBP3200] from the pop-up menu. (See p. 4-46.)

- Canon LBP3200 Help
  Describes the CAPT software for this printer.
  To open, double-click the icon.

■ For Windows XP

- The [Canon LBP3200] printer icon will be displayed in the [Printers and Faxes] folder.

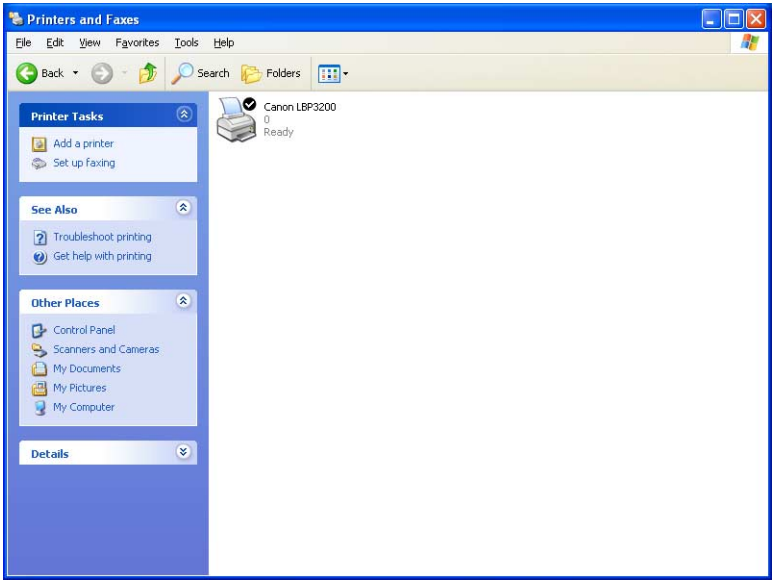

- The shortcut of the [Canon LBP3200] folder will be displayed on the desktop.

- The [Canon LBP3200] group will be added into [All Programs] under the [Start] menu.

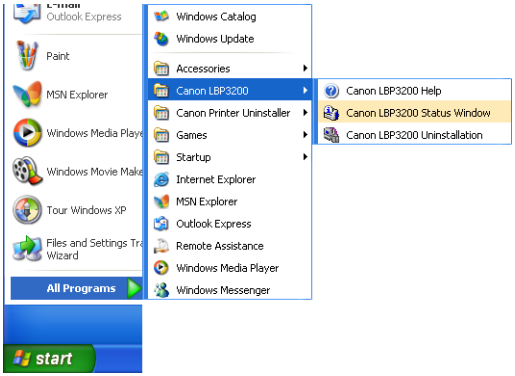

If you double-click the [Canon LBP3200] folder on the desktop, the icon for each of [Canon LBP3200] group will be displayed.

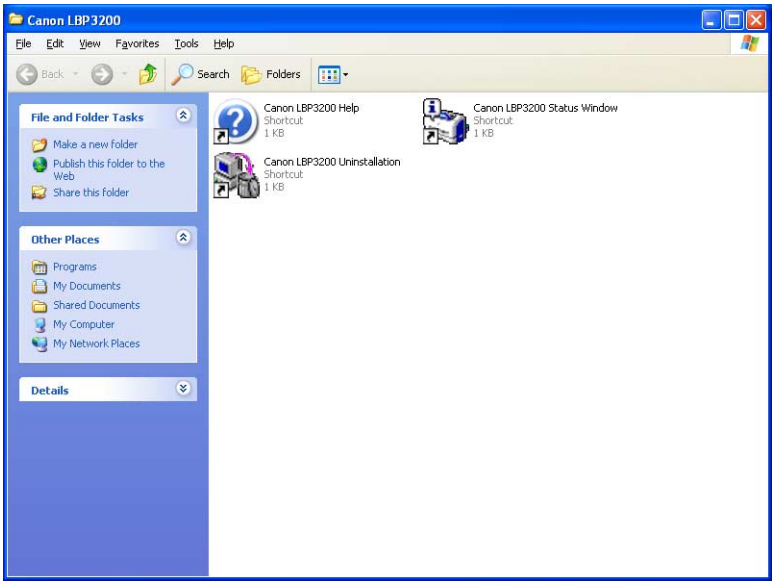

- Canon LBP3200 Uninstallation
  Used if you want to uninstall the CAPT software from your computer.
  To start up, double-click the icon. (See p. 3-49.)

- Canon LBP3200 Status Window
  Shows the printer or printing status with an animation or sound.
  You can pause or cancel the print job from this window.
  To display the Printer Status Window, click the Printer Status Window icon on the Windows taskbar, then click [Canon LBP3200] from the pop-up menu. (See p. 4-46.)

- Canon LBP3200 Help
  Describes the CAPT software for this printer.
  To open, double-click the icon.

Printing a Test Page

Before using the printer for the first time, be sure to print a test page using the following procedure.

NOTE

The screen shots used in this section are from Windows 2000.

1 Display the [Printers] or [Printers and Faxes] folder.

For Windows 98/Me/2000: Click the [Start] menu → [Settings] → [Printers].
For Windows XP Professional: Click the [Start] menu → [Printers and Faxes].
For Windows XP Home Edition: Click the [Start] menu → [Control Panel] → [Printers and Other Hardware] → [Printers and Faxes].

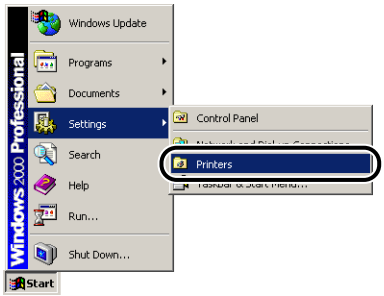

The [Printers] or [Printers and Faxes] folder will appear.

2 Select the [Canon LBP3200] icon, then select [Properties] from the [File] menu.

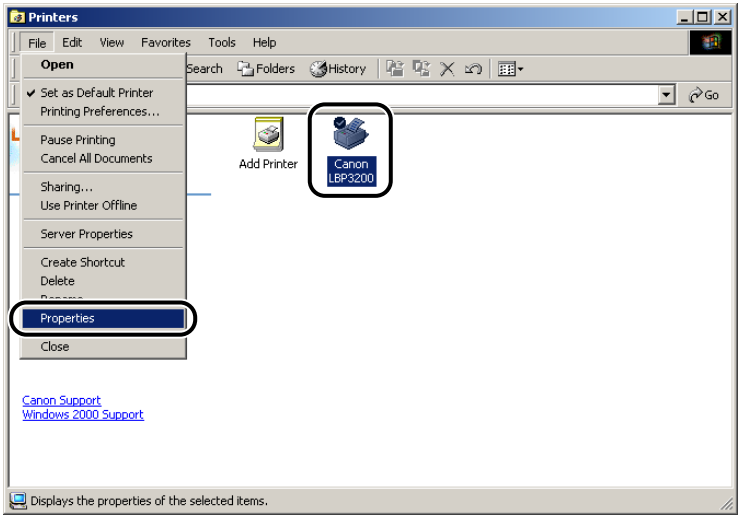

The [Properties] dialog box for this printer will appear.

3 Click [Print Test Page] from the [General] sheet.

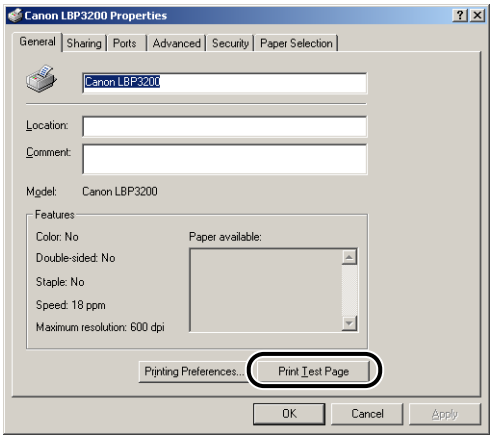

Printing a test page will be started.

4 If the test page is printed properly, click [OK].

If you are using Windows 98/Me, click [Yes].

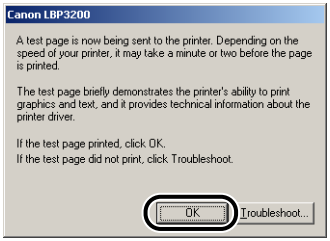

NOTE

If the test page is not printed properly, uninstall the CAPT software (see "Installation Problems," on p. 6-22), restart the computer, then start the installation procedure again.

Using the Printer on a Network

If you set this printer as a shared printer, you can use it from other computers to which the printer is not connected directly.

If you share this printer in a network, make the settings below. In this manual, the computer that is directly connected to this printer is called the "print server", and the computers that can use this printer over the network are called "clients".

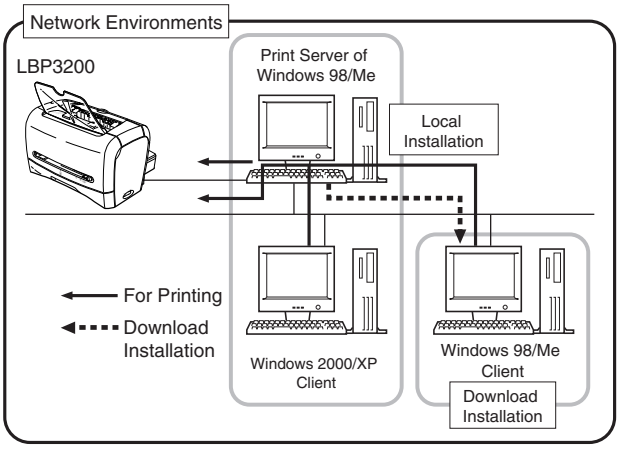

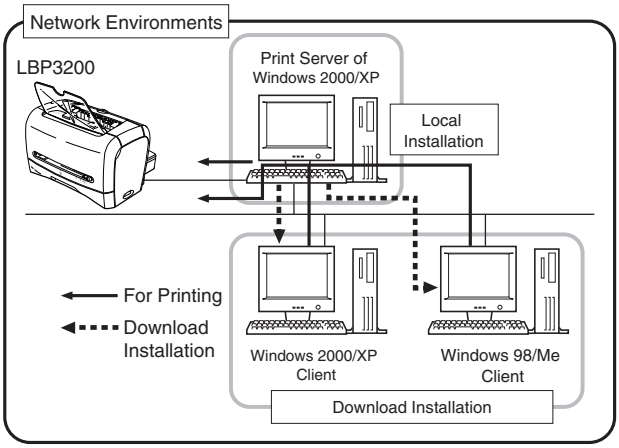

When using the print server, perform the following settings.

① Local install into the print server (Windows 98/Me → p. 3-4, Windows 2000 → p. 3-16, Windows XP → p. 3-22)

② Print server settings (Network) (Windows 98/Me → p. 3-36, Windows 2000/XP → p. 3-40)

③ Print server settings (Printer sharing) (Windows 98/Me → p. 3-39, Windows 2000/XP → p. 3-42)

④ Install into clients (See p. 3-45.)

IMPORTANT

Windows XP Service Pack 2 and other operating systems have the feature that blocks unauthorized access over the network to protect your computer (Windows Firewall). Because of this, you need to configure Windows Firewall to allow access when you are using the printer on an operating system that is equipped with Windows Firewall. (This configuration operation is only needed when using the printer in a network environment.) For details, refer to the file "note_ex.pdf" that is included in the [English] folder on the supplied "User Software for LBP3200" CD-ROM.

NOTE

Using this printer in your network requires that both the print server and the clients should be using Windows 98/Me or Windows 2000/XP.

Setting the Print Server

For Windows 98/Me

NOTE

The screen shots used in this section are from Windows Me.

■ *Network Settings*

1 **Double-click [My Computer] → [Control Panel] → [Network].**

The [Network] dialog box will appear.

2 Display the [Configuration] sheet, then click [Add].

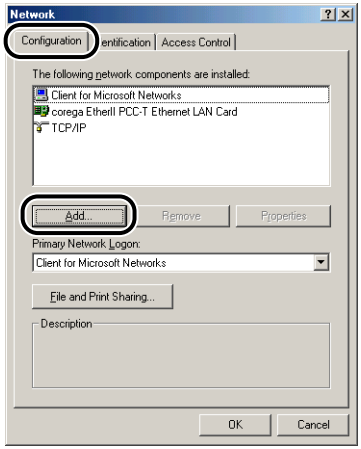

The [Select Network Component Type] dialog box will appear.

3 Click the [Service] icon, and then click [Add].

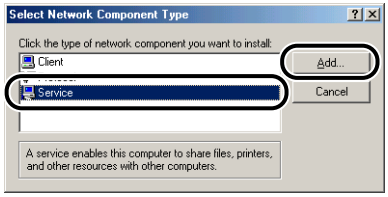

4 Select [File and printer sharing for Microsoft Networks], then click [OK].

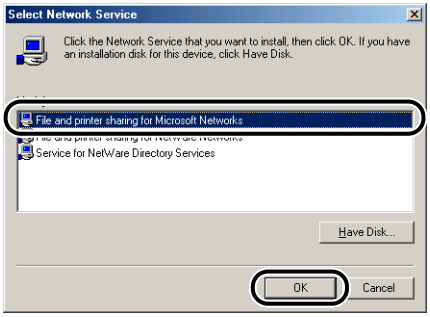

The [Select Network Component Type] dialog box will appear first, then the display will return to the [Network] dialog box.

5 Click [File and Print Sharing].

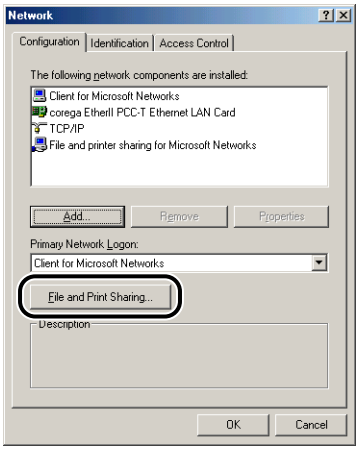

6 Make sure that [I want to be able to allow others to print to my printer(s).] is selected, then click [OK].

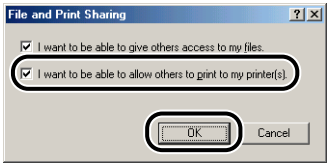

7 Display the [Access Control] sheet and select either [Share-level access control] or [User-level access control].

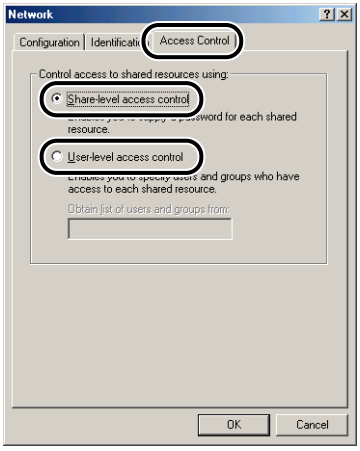

8 Click [OK], then restart Windows.

■ *Printer Sharing Settings*

1 Select the [Start] menu → [Settings] → [Printers].

The [Printers] folder will appear.

2 Right-click [Canon LBP3200] icon, then select [Sharing] from the pop-up menu.

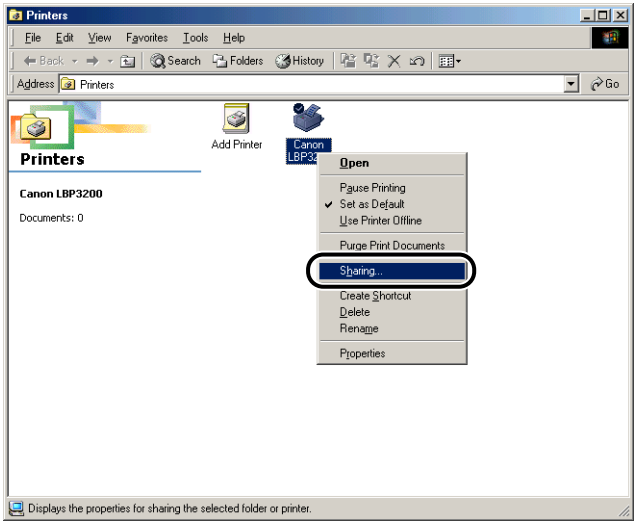

The [Properties] dialog box for this printer will appear.

3 Select [Shared As]. Change [Share Name] if you want to, then enter [Comment] and [Password] as needed.

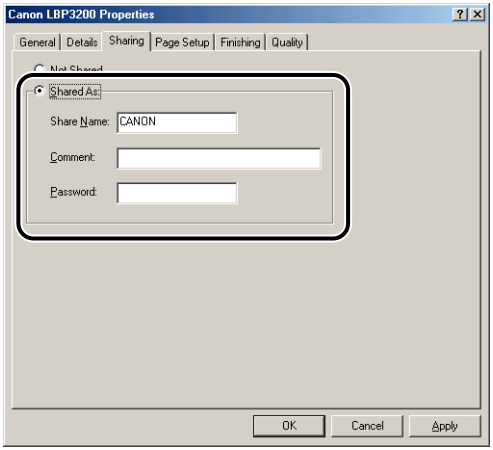

NOTE

- If you have selected [User-level access control] in Step 7 of "Network Settings" (see p. 3-38), click [Add] and select users that can use the printer.
- Do not enter blank or special characters in [Share Name].

4 Click [OK].

The printer icon changes to the printer sharing icon.

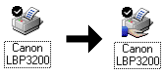

For Windows 2000/XP

NOTE

The screen shots used in this section are from Windows 2000.

■ *Network Settings*

1 For Windows 2000: Select the [Start] menu → [Settings] → [Network and Dial-up Connections]. For Windows XP: Select the [Start] menu → [Control Panel] → [Network and Internet Connections] → [Network Connections].

For Windows 2000, the [Network and Dial-up Connections] dialog box will appear.
For Windows XP, the [Network Connections] dialog box will appear.

2 Right-click the [Local Area Connection] icon, then select [Properties] from the pop-up menu.

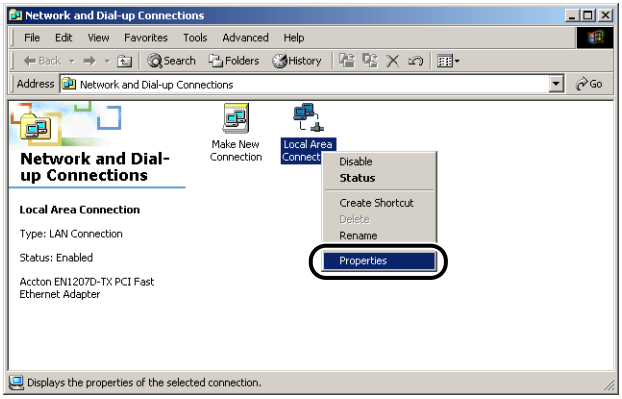

The [Local Area Connection Properties] dialog box will appear.

3 Make sure that [File and Printers Sharing for Microsoft Networks] is selected, then click [OK].

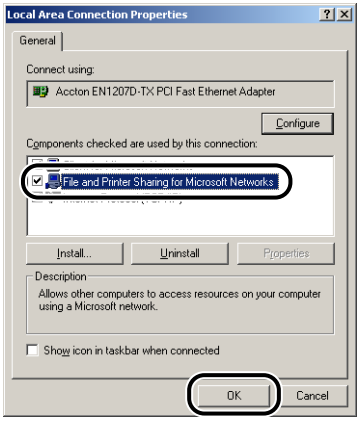

■ *Printer Sharing Settings*

NOTE

For Windows XP, the sharing settings cannot be made at the default configuration (the settings made immediately after the installation).
Printer sharing settings requires running [Network Setup Wizard] and enabling the sharing settings.
For more details, see the Online Help on Windows.

1 **For Windows 2000: Click the [Start] menu → [Settings] → [Printers].**
For Windows XP Professional: Click the [Start] menu → [Printers and Faxes].
For Windows XP Home Edition: Click the [Start] menu → [Control Panel] → [Printers and Other Hardware] → [Printers and Faxes].

The [Printers] or [Printers and Faxes] folder will appear.

2 **Right-click the [Canon LBP3200] icon, then select [Sharing] from the pop-up menu.**

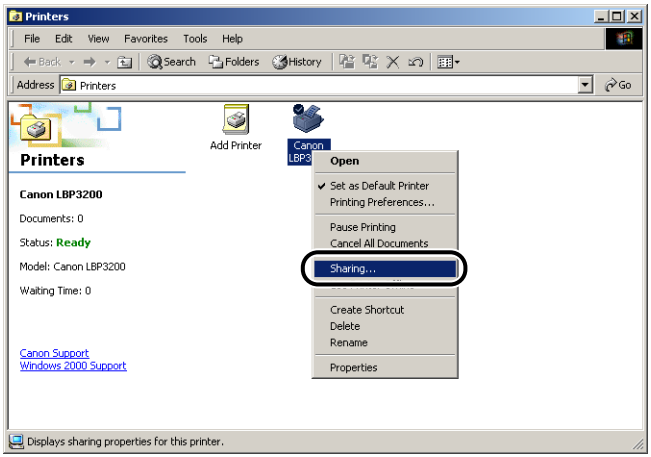

The [Properties] dialog box for this printer will appear.

3 Select [Shared as] (for Windows XP, [Share this printer]). Change the share name if you want to.

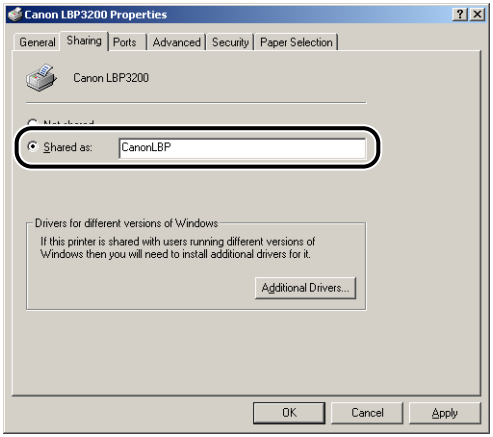

NOTE

- You can also specify the sharing settings during the local installation.
- Do not enter blank or special characters in [Shared as].

4 Click [Additional Drivers].

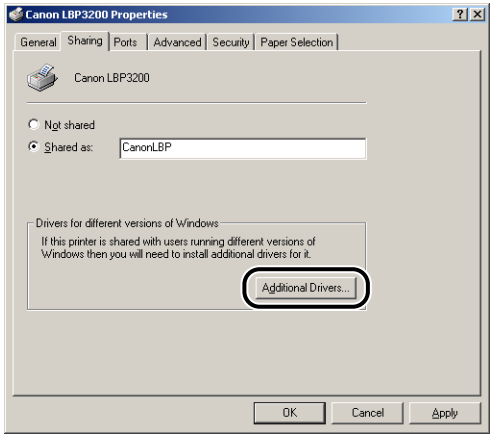

The [Additional Drivers] dialog box will appear.

5 For Windows 2000, select [Windows 95 or 98], for Windows XP, select [Windows 95, 98 and Me], then click [OK].

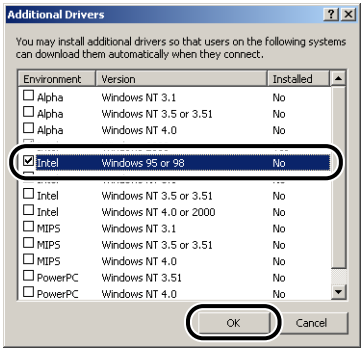

6 Put the supplied "User Software for LBP3200" CD-ROM into the CD-ROM drive.

If the [Insert Disk] dialog box appears, click [OK].

7 If your CD-ROM drive is drive [D:], select [D:\English\Win98], and then click [OK].

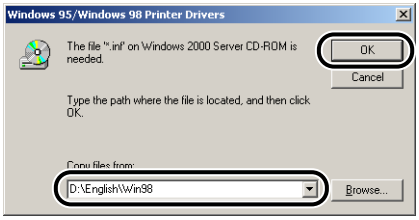

Copying files will be started.

8 Click [Close].

The printer icon changes to the printer sharing icon.

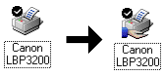

Installation on the Clients

This section describes the download installation as a way of installing the printer driver into clients.

NOTE

- For the clients, both Windows 98/Me and Windows 2000/XP can be used.
- If the print server is Windows 98/Me, the download installation into Windows 2000/XP cannot be performed.

Installing from [Add Printer Wizard]

IMPORTANT

If you are using Windows 2000/XP, be sure to log on by a user who has an administrator's permission when starting up.

NOTE

The screen shots used in this section are from Windows 2000.

1 **From the [Start] menu, select [Settings] → [Printers]. The [Printers] folder will open. Then, double-click the [Add Printer] icon.**

For Windows XP Professional: Click the [Start] menu → [Printers and Faxes] → [Add a printer].
For Windows XP Home Edition: Click the [Start] menu → [Control Panel] → [Printers and Other Hardware] → [Printers and Faxes] → [Add a printer].

The [Add Printer Wizard] dialog box will appear.

2 **Click [Next].**

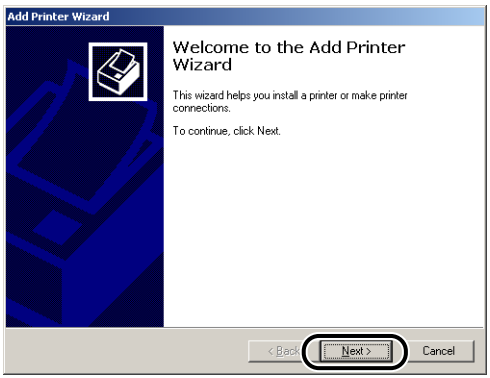

3 Select [Network printer] and click [Next].

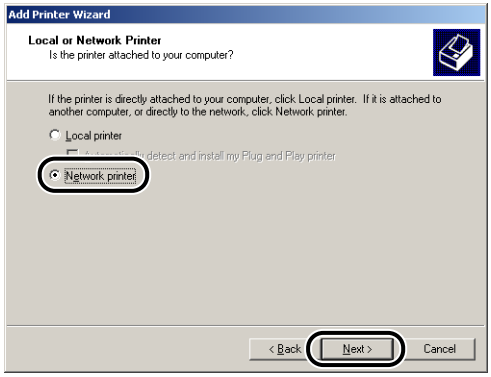

4 For Windows 2000/XP, click [Next]. For Windows 98/Me, click [Browse].

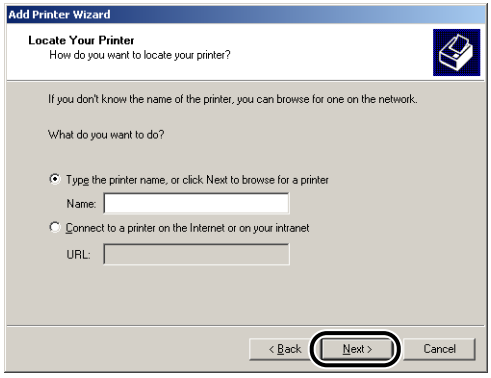

5 Select the directory of the print server, then click [Next].

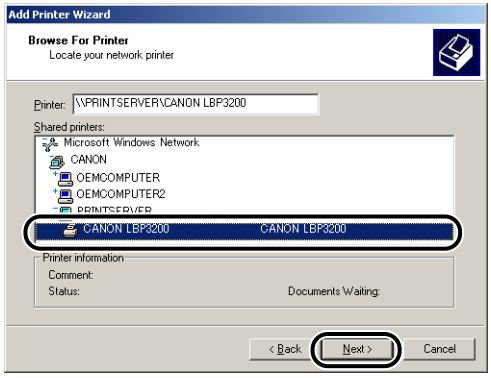

For Windows 98/Me, proceed to Step 7.

6 Select whether or not to use this printer as the default printer, then click [Next].

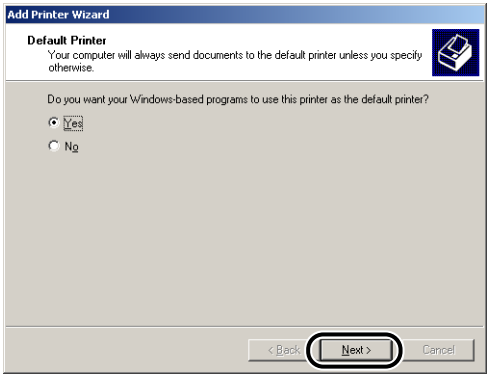

7 Click [Finish].

NOTE

Click [Yes] if the [Digital Signature Not Found] dialog box is displayed.

Installing from [Windows Explorer]

1 For Windows Me/2000/XP: Click the [Start] menu → [Programs] ([All Programs] for Windows XP) → [Accessories] → [Windows Explorer].

For Windows 98: Click the [Start] menu → [Programs] → [Windows Explorer].

The [Windows Explorer] dialog box will appear.

2 Select the print server from [My Network Places] (from [Network Computer] for Windows 98), then double-click the [Canon LBP3200] icon.

Or drag and drop the [Canon LBP3200] icon into the [Printers] folder.

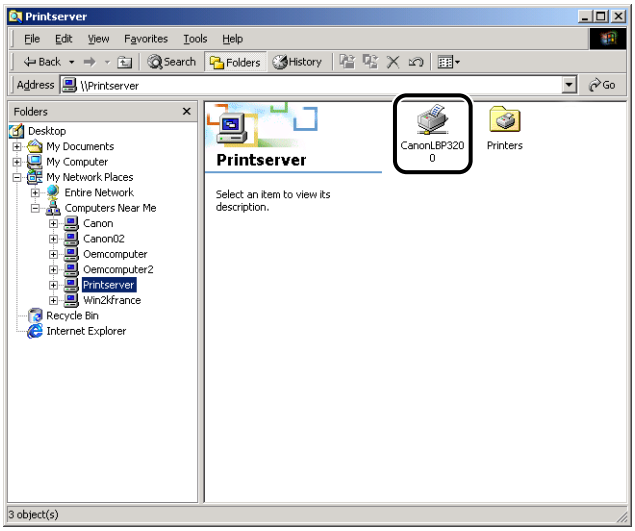

3 The [Printers] dialog box will appear. Follow the instructions on the screen.

Uninstalling the CAPT Software

Uninstalling removes the CAPT software from your computer. The CAPT software can be uninstalled using the following procedure.

IMPORTANT

If the printer driver was installed into Windows 2000/XP logged on by a user who has an administrator's permission, it can not be uninstalled from the computer logged on by any other than a user who has an administrator's permission. If you want to uninstall the printer driver from Windows 2000/XP, be sure to log on Windows 2000/XP by a user who has an administrator's permission when starting up.

1 Make sure to close all files and programs listed below.

- Help files
- Printer Status Window
- Control Panel
- Other applications

2 Open the [Canon LBP3200] folder on the desktop, double-click the [Canon LBP3200 Uninstallation] icon.

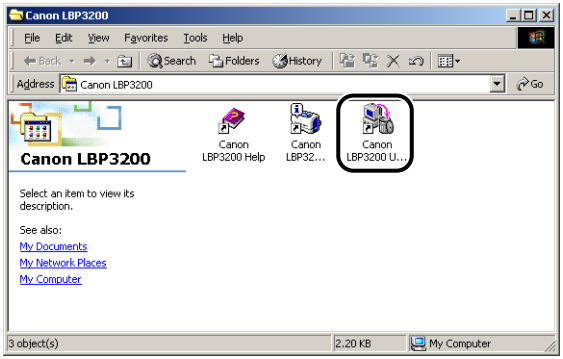

The [Canon LBP3200 Uninstallation] dialog box will appear.

The [Canon LBP3200 Uninstallation] dialog box also appears by selecting the [Start] menu ➞ [Programs] ([All Programs] for Windows XP) ➞ [Canon LBP3200] and clicking [Canon LBP3200 Uninstallation].

3 Click [OK].

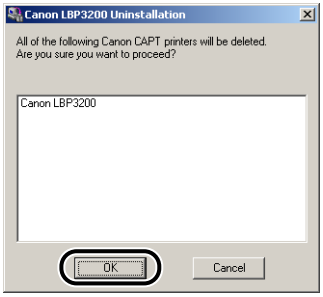

The uninstallation starts, and the dialog box for asking you for the restart of the computer appears.

4 Click [OK].

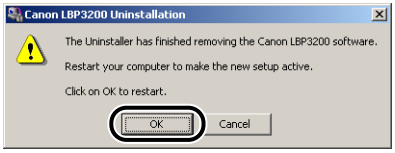

Windows will restart.

NOTE

- If the CAPT software cannot be uninstalled, see "When Uninstallation Fails," on p. 6-23.

Printing a Document

4

CHAPTER

This chapter describes the procedure printing documents and the functions of this printer.

Printing from an Application 4-2

Canceling a Print Job 4-6

Specifying the Printing Preferences 4-7

For Windows 98/Me 4-7

For Windows 2000/XP 4-10

Using the Printing Functions. 4-16

For Windows 98/Me 4-16

For Windows 2000/XP 4-23

Printing Multiple Pages on One Sheet 4-32

Scaling Print Output 4-33

Specifying a Custom Paper Size 4-36

Specifying the Print Quality 4-41

Specifying the Toner Density 4-42

Specifying the Image Refinement 4-43

Viewing the Printer Settings / Restoring the Default Settings. 4-44

Printer Status Window 4-46

Using the Printer Status Window 4-46

Displaying the Printer Status Window 4-47

Closing the Printer Status Window 4-48

Setting Preferences 4-48

Network Printer Status 4-50

Printing from an Application

After installing the software, now you can perform a print job.

The following instruction describes the procedure for printing from an application, taking Acrobat Reader included in the accompanying CD-ROM as an example.

1 Set paper in the cassette or manual feed slot.

NOTE

For instructions on printing on plain paper, heavy paper, labels, and transparencies, see "Printing on Plain Paper / Heavy Paper / Label / Transparency," on p. 2-14, for envelopes, see "Printing on Envelope," on p. 2-27, for custom paper, see "Printing on Custom Paper," on p. 2-40.

2 Open a PDF file you want to print with Acrobat Reader, then select [Page Setup] from the [File] menu.

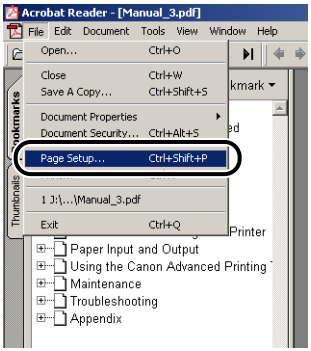

3 Specify the paper size of a document and printing orientation, then click [OK].

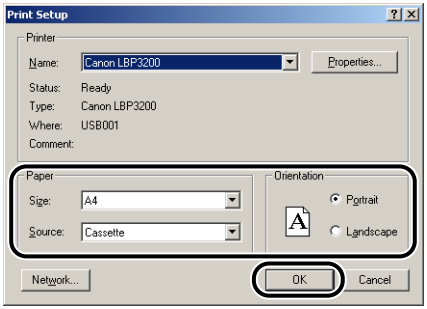

4 Select [Print] from the [File] menu.

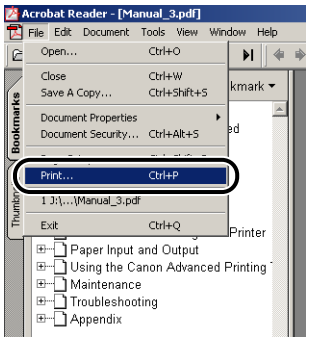

The printer driver will start up, and the [Print] dialog box will appear.

5 Select [Canon LBP3200] from [Name], then specify printing preferences.

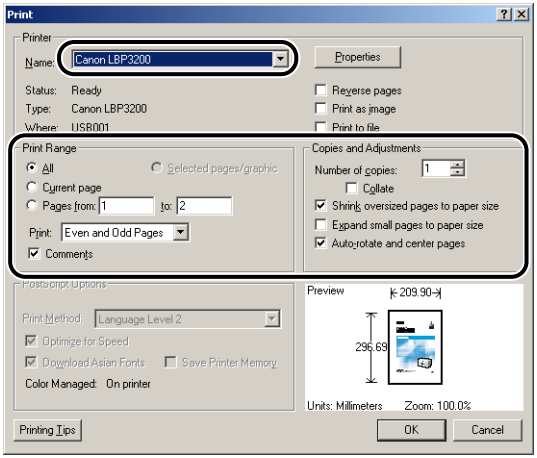

6 If you specify more detailed printing preferences, click [Properties].

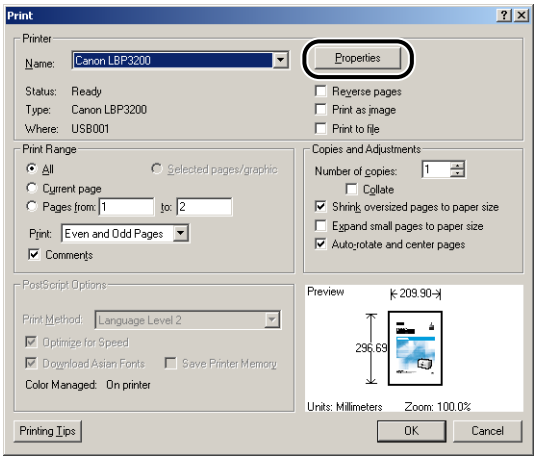

The [Properties] dialog box for this printer will appear.

NOTE

- The printer name displayed in this dialog box can be changed in the [Printers] folder (for Windows XP, the [Printers and Faxes] folder).
- The procedure for displaying the printer properties dialog box may differ depending on the application being used.

7 Specify the printing preferences in the [Page Setup], [Finishing], and [Quality] sheets, then click [OK].

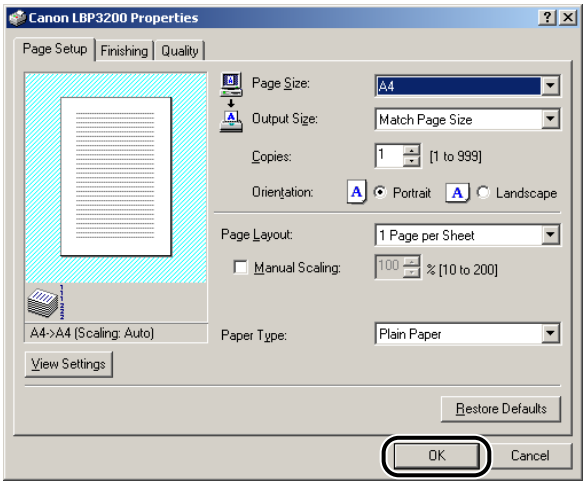

The [Print] dialog box will re-appear.

NOTE

It is recommended that you should confirm the contents in the [Page Setup] sheet for each print job.

8 Click [OK].

The printer will start to print.

NOTE

- If any trouble occurs in printing, see Chapter 6 "Troubleshooting".
- "Using the Printing Functions," on p. 4-16 describes how to use the functions of the printer and printer driver. By specifying the settings for the printer and printer driver depending on your purpose, you can make the most of this printer.

Canceling a Print Job

You can cancel, pause, or resume a print job in the Printer Status Window.

1 Start printing.

The Printer Status Window will appear.

NOTE

The Printer Status Window may not appear depending on the settings for [Display Printer Status Window] in the [Preferences] menu. (See "Setting Preferences," on p. 4-48.)

2 Click the button for the desired operation on the toolbar.

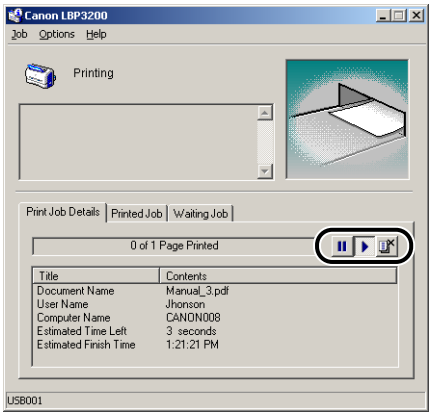

● **Canceling the print job**

❑ Click .

● **Pausing the print job**

❑ Click .

● **Resuming the print job**

❑ Click .

Specifying the Printing Preferences

The CAPT software for LBP3200 allows you to specify various printing preferences.

To specify the printing preferences, first display the [Printer Properties] dialog box or the [Document Properties] dialog box. Follow the procedure below suitable for your operating system to display the properties dialog boxes.

For Windows 98/Me

If you display the [Document Properties] dialog box from your application, you can specify the settings for a particular print job.

If you display the [Printer Properties] dialog box from the [Printers] folder, you can specify the initial settings for all print jobs.

Displaying the [Document Properties] Dialog Box from the Application

This section describes the procedure, taking Acrobat Reader included in the accompanying CD-ROM as an example.

1 **Select [Print] from the [File] menu in the application.**

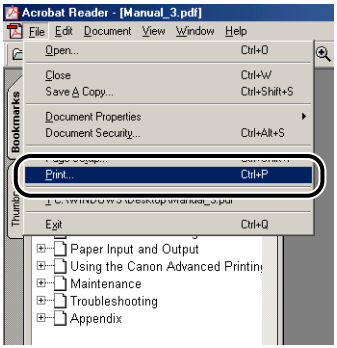

The [Print] dialog box will appear.

NOTE

Printing procedures differ depending on your application. For details on print jobs, see the instruction manual supplied with your application.

2 Confirm the printer name, and then click [Properties].

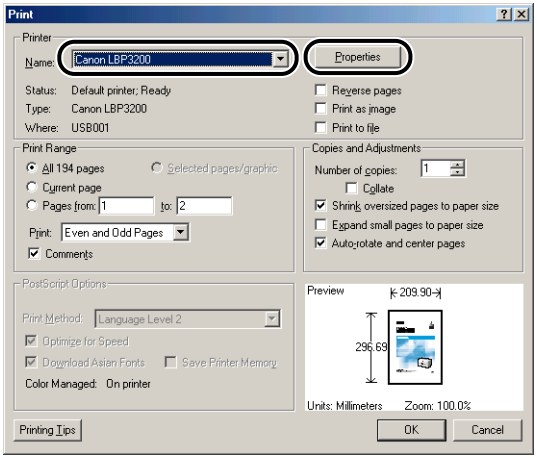

The [Document Properties] dialog box will appear.

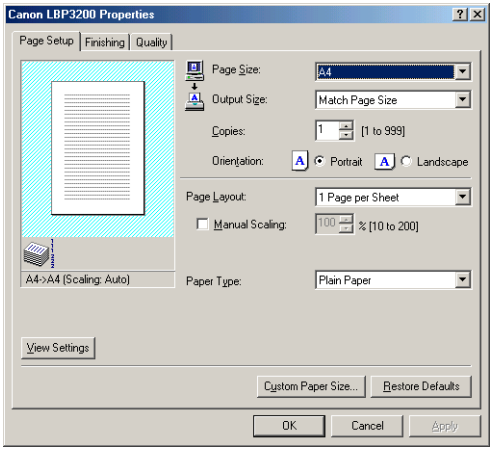

Displaying the [Printer Properties] Dialog Box from the [Printers] Folder

1 **From the [Start] menu, select [Settings] → [Printers].**

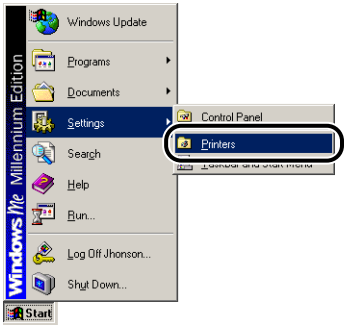

The [Printers] folder will appear.

2 **Select the [Canon LBP3200] icon, then select [Properties] from the [File] menu.**

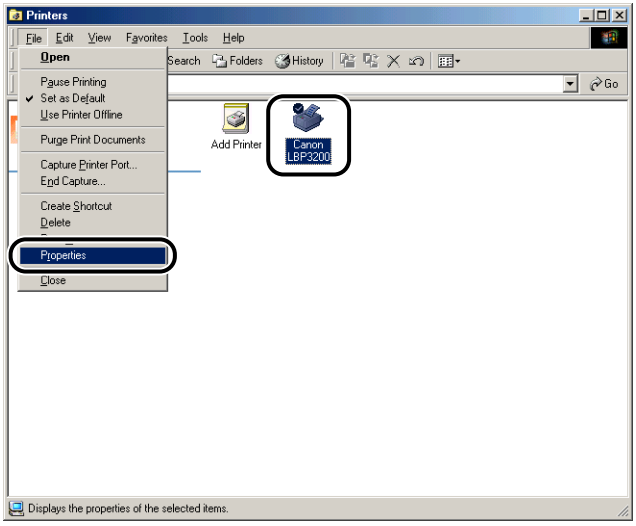

The [Printer Properties] dialog box will appear.

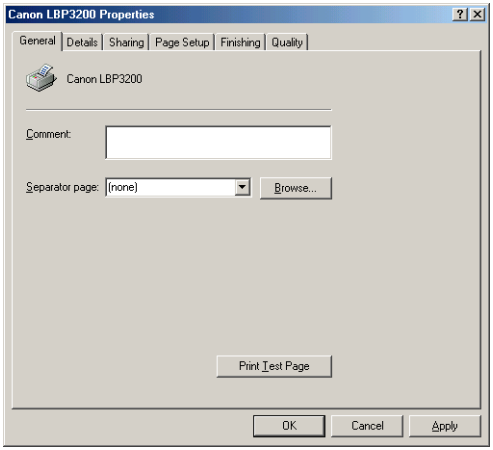

NOTE

The [Printer Properties] dialog box can also be opened by right-clicking the [Canon LBP3200] icon and selecting [Properties] from the pop-up menu.

For Windows 2000/XP

If you display the [Document Properties] dialog box from your application, you can specify the settings for a particular print job.

If you display the [Document Properties] dialog box from the [Printers] folder, you can specify the initial settings for all print jobs.

If you display the [Printer Properties] dialog box from the [Printers] folder, you can select the custom paper, etc.

NOTE

Full Control Permission is required to specify the settings for the [Printers] folder. If you cannot display the [Document Properties] dialog box from the [Printers] folder, display the dialog box from the application.

Displaying the [Document Properties] Dialog Box from the Application

This section describes the procedure, taking Acrobat Reader included in the accompanying CD-ROM as an example.

1 Select [Print] from the [File] menu in the application.

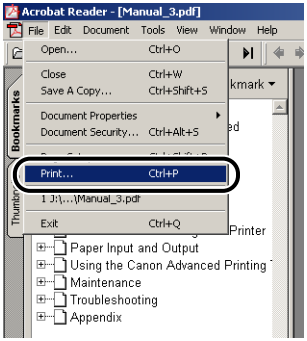

2 Confirm the printer name, and then click [Properties].

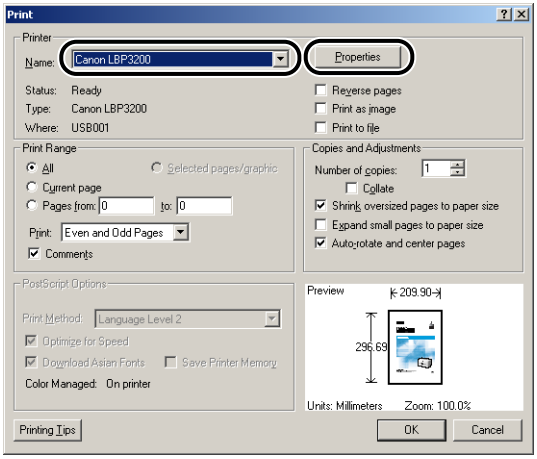

The [Document Properties] dialog box will appear.

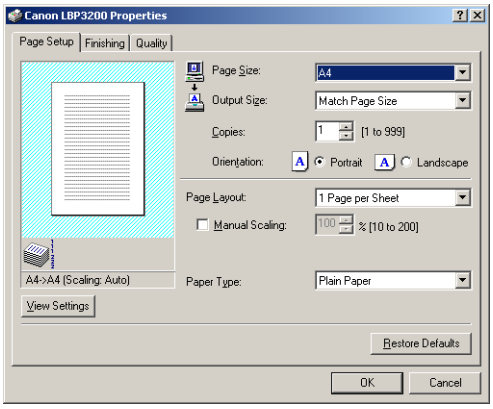

NOTE

The [Document Properties] dialog box can also be opened by right-clicking the [Canon LBP3200] icon and selecting [Printing Preferences] from the pop-up menu.

Displaying the [Document Properties] Dialog Box from the [Printers] Folder

1 From the [Start] menu, select [Settings] → [Printers].

For Windows XP Professional: Click the [Start] menu → [Printers and Faxes].
For Windows XP Home Edition: Click the [Start] menu → [Control Panel] → [Printers and Other Hardware] → [Printers and Faxes].

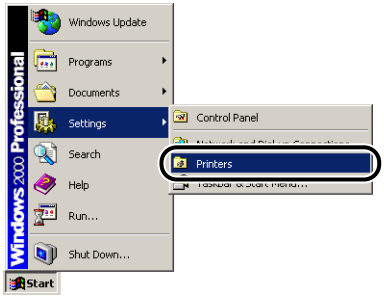

The [Printers] folder will appear.

2 Select the [Canon LBP3200] icon, then select [Printing Preferences] from the [File] menu.

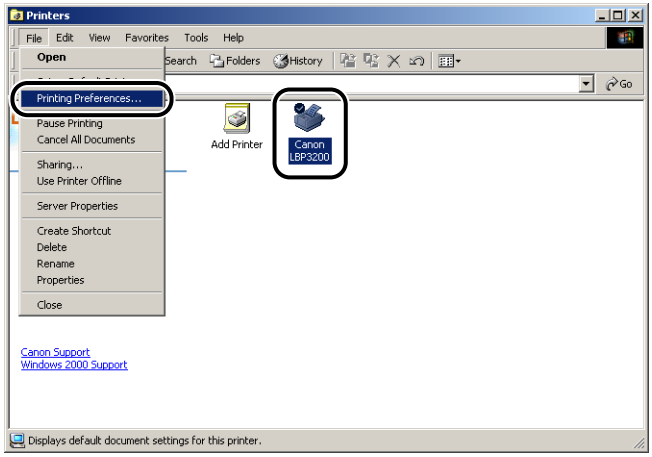

The [Document Properties] dialog box will appear.

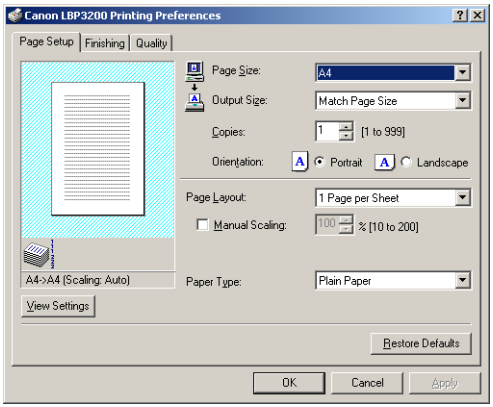

NOTE

The [Document Properties] dialog box can also be opened by right-clicking the [Canon LBP3200] icon and selecting [Printing Preferences] from the pop-up menu.

Displaying the [Printer Properties] Dialog Box from the [Printers] Folder

1 From the [Start] menu, select [Settings] → [Printers].

For Windows XP Professional: Click the [Start] menu → [Printers and Faxes].
For Windows XP Home Edition: Click the [Start] menu → [Control Panel] → [Printers and Other Hardware] → [Printers and Faxes].

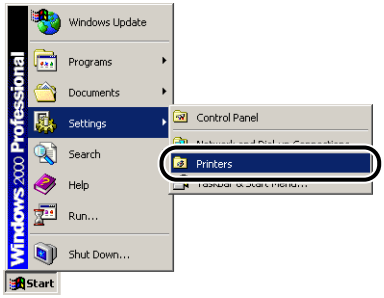

The [Printers] folder will appear.

2 Select the [Canon LBP3200] icon, then select [Properties] from the [File] menu.

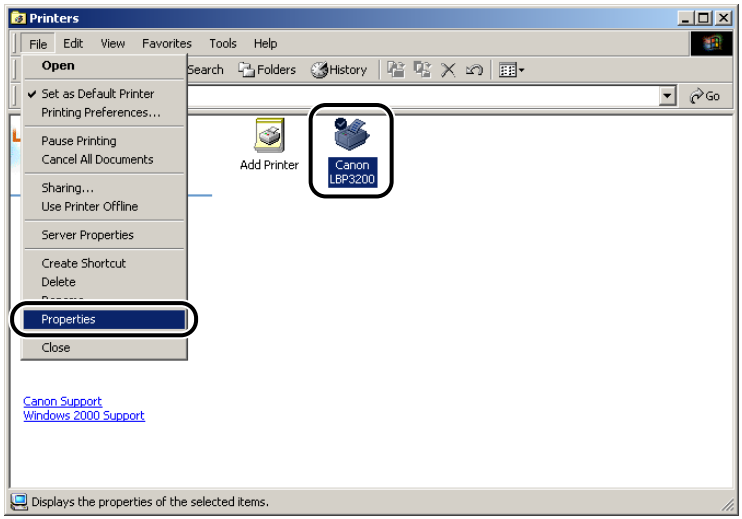

The [Printer Properties] dialog box will appear.

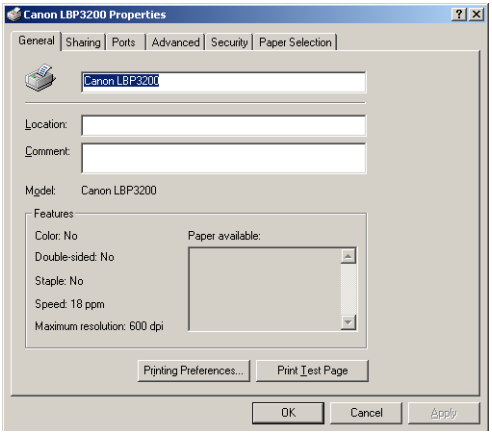

NOTE

The [Printer Properties] dialog box can also be opened by right-clicking the [Canon LBP3200] icon and selecting [Properties] from the pop-up menu.

Using the Printing Functions

For Windows 98/Me

The [Printer Properties] dialog box and the [Document Properties] dialog box contain the following sheets that allow you to specify the various printing functions. You can switch among sheets by clicking the tabs.

This section describes the types of printing preferences that can be specified in each sheet.

- [Document Properties] dialog box
  - [Page Setup] sheet
  - [Finishing] sheet
  - [Quality] sheet
- [Printer Properties] dialog box
  - [General] sheet
  - [Details] sheet
  - [Sharing] sheet
  - [Page Setup] sheet
  - [Finishing] sheet
  - [Quality] sheet

NOTE

For more details on the operations, see the Online Help.
The Online Help can be displayed using the following procedure. Click within the Online Help to close the displayed Online Help.

- Press the [Tab] key on your keyboard to select an item that you want to display, then press the [F1] key.
- Right-click an item that you want to display, then click [What's This?] from the pop-up menu.
- Click [?] (Help) on the [Titlebar], move the [?]-attached cursor to an item that you want to display, then click it.

[Page Setup] Sheet

The [Page Setup] sheet allows you to specify the following printing preferences.

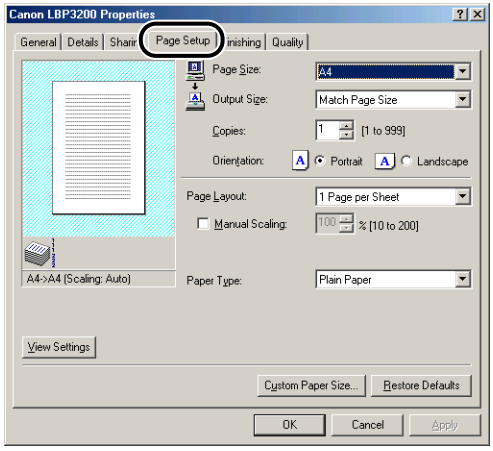

■ Page Size

Display the [Page Size] pull-down menu, then select a desired page size.

The page sizes that can be selected are as follows:

- A3 (297.0 mm x 420.0 mm, 11.69 inch x 16.54 inch)
- B4 (257.0 mm x 364.0 mm, 10.12 inch x 14.33 inch)
- A4 (210.0 mm x 297.0 mm, 8.27 inch x 11.69 inch)
- B5 (182.0 mm x 257.0 mm, 7.17 inch x 10.12 inch)
- A5 (148.0 mm x 210.0 mm, 5.83 inch x 8.27 inch)
- Letter (215.9 mm x 279.4 mm, 8.50 inch x 11.00 inch)
- Legal (215.9 mm x 355.6 mm, 8.50 inch x 14.00 inch)
- Executive (184.1 mm x 266.7 mm, 7.25 inch x 10.50 inch)
- Envelope DL (110.0 mm x 220.0 mm, 4.33 inch x 8.66 inch)
- Envelope COM10 (104.9 mm x 241.3 mm, 4.13 inch x 9.50 inch)
- Envelope C5 (162.0 mm x 229.0 mm, 6.38 inch x 9.02 inch)
- Envelope Monarch (98.5 mm x 190.5 mm, 3.88 inch x 7.50 inch)
- Size 1 (Custom paper, name changeable) (See p. 4-36.)
- Size 2 (Custom paper, name changeable) (See p. 4-36.)
- Size 3 (Custom paper, name changeable) (See p. 4-36.)

■ Output Size

Display the [Output Size] pull-down menu, then select a desired paper size.

The paper sizes that can be selected are as follows:

- Match Page Size
- A4 (210.0 mm x 297.0 mm, 8.27 inch x 11.69 inch)
- B5 (182.0 mm x 257.0 mm, 7.17 inch x 10.12 inch)
- A5 (148.0 mm x 210.0 mm, 5.83 inch x 8.27 inch)
- Letter (215.9 mm x 279.4 mm, 8.50 inch x 11.00 inch)
- Legal (215.9 mm x 355.6 mm, 8.50 inch x 14.00 inch)
- Executive (184.1 mm x 266.7 mm, 7.25 inch x 10.50 inch)
- Envelope DL (110.0 mm x 220.0 mm, 4.33 inch x 8.66 inch)
- Envelope COM10 (104.9 mm x 241.3 mm, 4.13 inch x 9.50 inch)
- Envelope C5 (162.0 mm x 229.0 mm, 6.38 inch x 9.02 inch)
- Envelope Monarch (98.5 mm x 190.5 mm, 3.88 inch x 7.50 inch)
- Size 1 (Custom paper, name changeable) (See p. 4-36.)
- Size 2 (Custom paper, name changeable) (See p. 4-36.)
- Size 3 (Custom paper, name changeable) (See p. 4-36.)

NOTE

- When printing on paper that is of the same size as [Page Size], select [Match Page Size].
- If you select the paper size that differs from [Page Size], the print will be automatically reduced or enlarged to fit on the page.
- When [Page Size] is A3 or B4 size and [Match Page Size] is selected for [Output Size], the print will be automatically reduced to A4 size (default).
- If you can specify the page size, print copies, and orientation in your application, you do not have to specify the settings in the [Page Setup] sheet.

■ Copies

Allows you to specify the number of copies to be printed.

Click the [Copies] spin button or enter a number in the spin box. You can specify from 1 to 999 print copies.

■ Orientation

Allows you to select either portrait orientation or landscape orientation.

Click either [Portrait] or [Landscape] for [Orientation].

■ Page Layout (See p. 4-32.)

Multiple pages can be printed on one sheet of paper.

The number of pages that can be selected is 1, 2, 4, 8, or 9 (Pages per Sheet).

If you select 2, 4, 8, or 9 (Pages per Sheet), the [Page Order] pull-down menu will appear, allowing you to specify the page order.

■ Manual Scaling / Page Order (See p. 4-34.)

When [1 Page per Sheet] is selected for [Page Layout], [Manual Scaling] appears. When 2, 4, 8, or 9 (Pages per Sheet) is selected for [Page Layout], [Page Order] appears.

- [Manual Scaling]: When the settings in [Page Size] and [Output Size] are different, the scale factor will be adjusted automatically, producing an enlarged or reduced print. If you want to specify the scale factor manually, select [Manual Scaling], then specify the value in the spin box. You can specify from 10 to 200 %.
- [Page Order]: You can select the page order when printing multiple pages on one sheet of paper.

■ Paper Type

Specify the type of paper to be used.

Specify as follows.

Paper Type	Printer Driver Setting
Plain paper (64 - 90 g/m^2)	[Plain Paper] [Plain Paper L] *1
Heavy paper (91-163 g/m^2)	[Heavy Paper] [Heavy Paper H] *2
Transparency	[Transparencies]
Label	[Heavy Paper] [Heavy Paper H] *3
Envelope	*4

*1 If paper curls excessively when printed with [Plain Paper] selected, select [Plain Paper L].

*2 If print fixing is not sufficient when printed with [Heavy Paper] selected, select [Heavy Paper H].

*3 For printing on labels, select [Heavy Paper] for the paper type. If print fixing is not sufficient when printed with [Heavy Paper] selected, select [Heavy Paper H].

*4 For printing on envelopes, select any of [Envelope C5], [Envelope COM10], [Envelope DL], or [Envelope Monarch] for the paper size. Then, printing is performed in the appropriate print mode automatically. You do not have to set the paper type.

■ Custom Paper Size (See p. 4-36.)

The dialog box shown below will appear by clicking [Custom Paper Size].

This dialog box allows you to specify the height and width of custom paper, which is different from the standard paper.

Up to 3 custom paper sizes can be specified in the LBP3200.

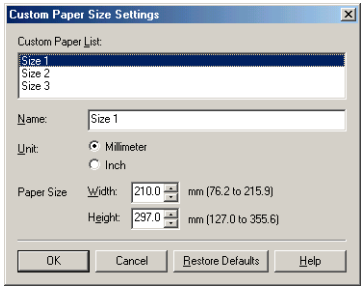

[Finishing] Sheet

The [Finishing] sheet allows you to specify the following printing preferences.

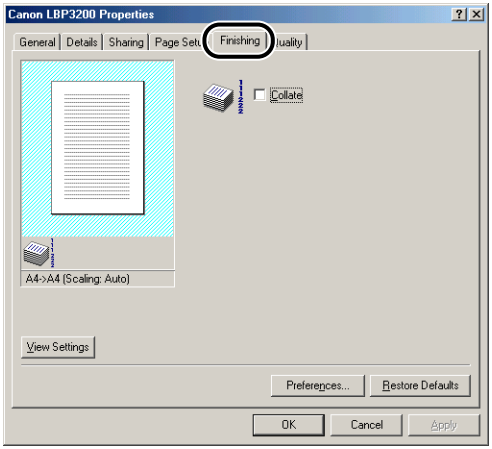

■ Collate

When printing multiple pages of the document in multiple copies, select whether or not to make collated sets of copies.

When a checkmark is not placed for [Collate], the specified print copies are made for each page.

When a checkmark is placed for [Collate], the sets of copies are collated during print.

■ Preferences

The dialog box shown below will appear by clicking [Preferences].

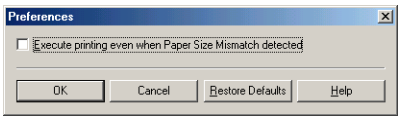

When a checkmark is placed for [Execute printing even when Paper Size Mismatch detected], the print is made on the currently loaded paper, regardless of the setting in [Output Size] on the [Page Setup] sheet.
When a checkmark is not placed, if the setting in [Output Size] for a print job to be performed differs from the setting in [Output Size] for a print job that has been performed most recently, a message appears on the Printer Status Window, stopping the printing operation. However, for a print job that is performed immediately after you turn ON/OFF the printer or you pull out and insert the cassette, a message does not appear on the Printer Status Window and the print is made on the currently loaded paper, regardless of the setting in [Output Size].

[Quality] Sheet

The [Quality] sheet allows you to specify the following printing preferences.

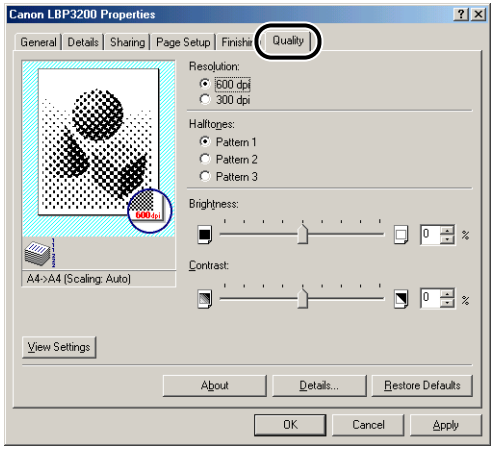

■ Resolution

Allows you to specify the fineness of images.

Select [600 dpi] or [300 dpi].

■ Halftones

Allows you to select the halftone processing for printing color or gray-scale images.

[Pattern 1]	Suitable for printing general documents.
[Pattern 2]	Sharpness is applied when printing photographic image. To print an image of a person or for emphasizing the darkness.
[Pattern 3]	Colored letters and thin lines are printed more clearly.

■ Brightness / Contrast

To specify the settings, click the spin button for [Brightness] or [Contrast]. The settings can also be specified by dragging the slider rightward and leftward. You can specify from -80 to 80%.

■ Details

The dialog box shown below will appear by clicking [Details].

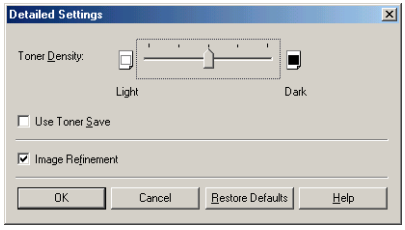

- To change the density settings, drag the slider for [Toner Density] rightward and leftward.
- If you place a checkmark for [Use Toner Save], you can save toner.
- If you place a checkmark for [Image Refinement], the printer will smooth jagged characters or graphics automatically.

IMPORTANT

Using the Toner Save mode may decrease print density making printed text look patchy.

[General] Sheet

Displays the printer name. Allows you to print a test page.

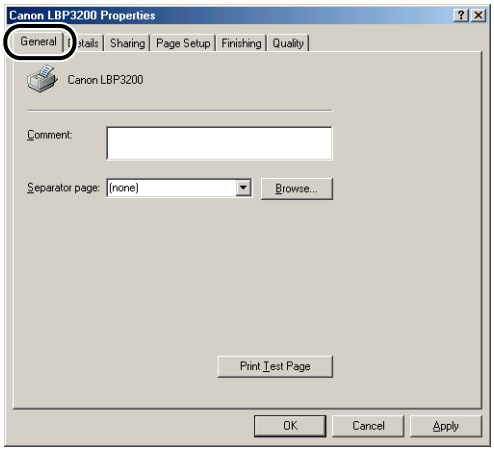

[Details] Sheet

Allows you to specify the settings for the printer port and spooling and add drivers.

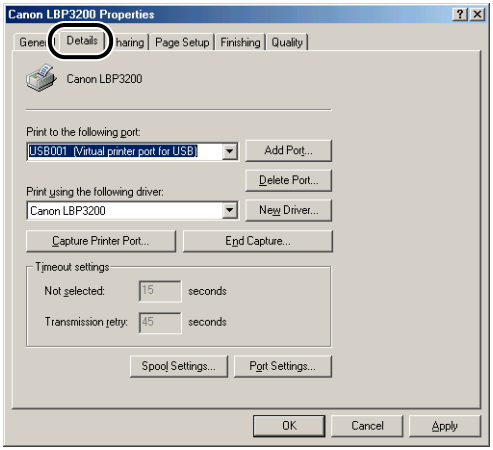

[Sharing] Sheet

Allows you to specify whether or not to share the printer.

NOTE

When [File and printer sharing for Microsoft Networks] is not added to the network settings, the [Sharing] sheet is not displayed. (See p. 3-36.)

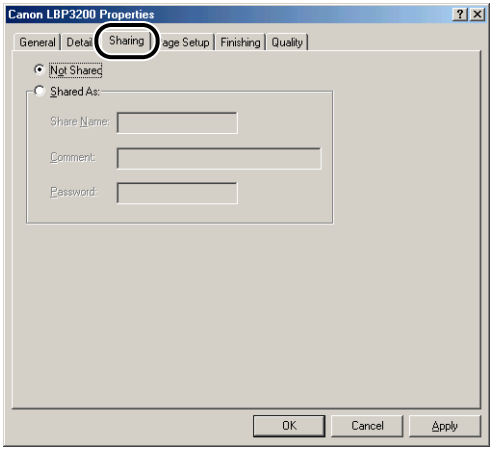

For Windows 2000/XP

The [Printer Properties] dialog box and the [Document Properties] dialog box contain the following sheets that allow you to specify the various printing functions. You can switch among sheets by clicking the tabs.

This section describes the types of printing preferences that can be specified in each sheet.

- [Document Properties] dialog box
  - [Page Setup] sheet
  - [Finishing] sheet
  - [Quality] sheet
- [Printer Properties] dialog box
  - [General] sheet
  - [Sharing] sheet
  - [Ports] sheet
  - [Advanced] sheet
  - [Security] sheet
  - [Paper Selection] sheet

NOTE

For more details on the operations, see the Online Help.
The Online Help can be displayed using the following procedure. Click within the Online Help to close the displayed Online Help.

- Press the [Tab] key on your keyboard to select an item that you want to display, then press the [F1] key.
- Right-click an item that you want to display, then click [What's This?] from the pop-up menu.
- Click [?] (Help) on the [Titlebar], move the [?]-attached cursor to an item that you want to display, then click it.

[Page Setup] Sheet

The [Page Setup] sheet allows you to specify the following printing preferences.

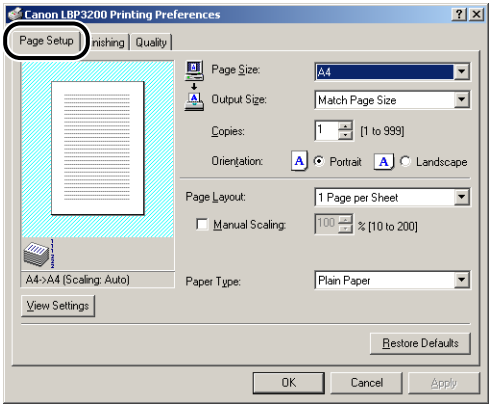

■ Page Size

Display the [Page Size] pull-down menu, then select a desired page size.

The page sizes that can be selected are as follows:

- A3 (297.0 mm x 420.0 mm, 11.69 inch x 16.54 inch)
- B4 (257.0 mm x 364.0 mm, 10.12 inch x 14.33 inch)
- A4 (210.0 mm x 297.0 mm, 8.27 inch x 11.69 inch)
- B5 (182.0 mm x 257.0 mm, 7.17 inch x 10.12 inch)
- A5 (148.0 mm x 210.0 mm, 5.83 inch x 8.27 inch)
- Letter (215.9 mm x 279.4 mm, 8.50 inch x 11.00 inch)
- Legal (215.9 mm x 355.6 mm, 8.50 inch x 14.00 inch)
- Executive (184.1 mm x 266.7 mm, 7.25 inch x 10.50 inch)
- Envelope DL (110.0 mm x 220.0 mm, 4.33 inch x 8.66 inch)
- Envelope COM10 (104.9 mm x 241.3 mm, 4.13 inch x 9.50 inch)
- Envelope C5 (162.0 mm x 229.0 mm, 6.38 inch x 9.02 inch)
- Envelope Monarch (98.5 mm x 190.5 mm, 3.88 inch x 7.50 inch)

- Size 1 (Custom paper, name changeable) (See p. 4-36.)
- Size 2 (Custom paper, name changeable) (See p. 4-36.)
- Size 3 (Custom paper, name changeable) (See p. 4-36.)

■ Output Size

Display the [Output Size] pull-down menu, then select a desired paper size.

The paper sizes that can be selected are as follows:

- Match Page Size
- A4 (210.0 mm x 297.0 mm, 8.27 inch x 11.69 inch)
- B5 (182.0 mm x 257.0 mm, 7.17 inch x 10.12 inch)
- A5 (148.0 mm x 210.0 mm, 5.83 inch x 8.27 inch)
- Letter (215.9 mm x 279.4 mm, 8.50 inch x 11.00 inch)
- Legal (215.9 mm x 355.6 mm, 8.50 inch x 14.00 inch)
- Executive (184.1 mm x 266.7 mm, 7.25 inch x 10.50 inch)
- Envelope DL (110.0 mm x 220.0 mm, 4.33 inch x 8.66 inch)
- Envelope COM10 (104.9 mm x 241.3 mm, 4.13 inch x 9.50 inch)
- Envelope C5 (162.0 mm x 229.0 mm, 6.38 inch x 9.02 inch)
- Envelope Monarch (98.5 mm x 190.5 mm, 3.88 inch x 7.50 inch)
- Size 1 (Custom paper, name changeable) (See p. 4-36.)
- Size 2 (Custom paper, name changeable) (See p. 4-36.)
- Size 3 (Custom paper, name changeable) (See p. 4-36.)

NOTE

- When printing on paper that is of the same size as [Page Size], select [Match Page Size].
- If you select the paper size that differs from [Page Size], the print will be automatically reduced or enlarged to fit on the page.
- When [Page Size] is A3 or B4 size and [Match Page Size] is selected for [Output Size], the print will be automatically reduced to A4 size (default).
- If you can specify the page size, print copies, and orientation in your application, you do not have to specify the settings in the [Page Setup] sheet.

■ Copies

Allows you to specify the number of copies to be printed.

Click the [Copies] spin button or enter a number in the spin box. You can specify from 1 to 999 print copies.

■ Orientation

Allows you to select either portrait orientation or landscape orientation.

Click either [Portrait] or [Landscape] for [Orientation].

■ Page Layout (See p. 4-32.)

Multiple pages can be printed on one sheet of paper.

The number of pages that can be selected is 1, 2, 4, 8, or 9 (Pages per Sheet).

If you select 2, 4, 8, or 9 (Pages per Sheet), the [Page Order] pull-down menu will appear, allowing you to specify the page order.

■ Manual Scaling / Page Order (See p. 4-34.)

When [1 Page per Sheet] is selected for [Page Layout], [Manual Scaling] appears. When 2, 4, 8, or 9 (Pages per Sheet) is selected for [Page Layout], [Page Order] appears.

- [Manual Scaling]: When the settings in [Page Size] and [Output Size] are different, the scale factor will be adjusted automatically, producing an enlarged or reduced print. If you want to specify the scale factor manually, select [Manual Scaling], then specify the value in the spin box. You can specify from 10 to 200 %.
- [Page Order]: You can select the page order when printing multiple pages on one sheet of paper.

■ Paper Type

Specify the type of paper to be used.

Specify as follows.

Paper Type	Printer Driver Setting
Plain paper (64 - 90 g/m^2)	[Plain Paper] [Plain Paper L] *1
Heavy paper (91-163 g/m^2)	[Heavy Paper] [Heavy Paper H] *2
Transparency	[Transparencies]
Label	[Heavy Paper] [Heavy Paper H] *3
Envelope	*4

*1 If paper curls excessively when printed with [Plain Paper] selected, select [Plain Paper L].

*2 If print fixing is not sufficient when printed with [Heavy Paper] selected, select [Heavy Paper H].

*3 For printing on labels, select [Heavy Paper] for the paper type. If print fixing is not sufficient when printed with [Heavy Paper] selected, select [Heavy Paper H].

*4 For printing on envelopes, select any of [Envelope C5], [Envelope COM10], [Envelope DL], or [Envelope Monarch] for the paper size. Then, printing is performed in the appropriate print mode automatically. You do not have to set the paper type.

[Finishing] Sheet

The [Finishing] sheet allows you to specify the following printing preferences.

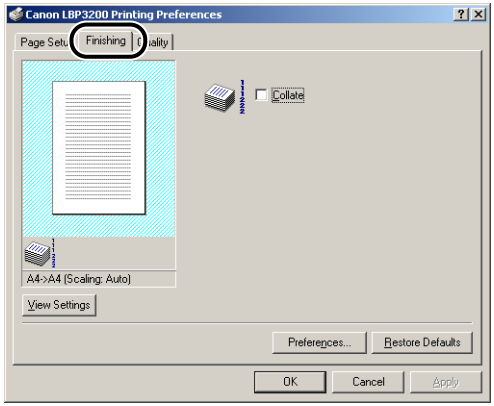

■ Collate

When printing multiple pages of the document in multiple copies, select whether or not to make collated sets of copies.

When a checkmark is not placed for [Collate], the specified print copies are made for each page.

When a checkmark is placed for [Collate], the sets of copies are collated during print.

■ Preferences

The dialog box shown below will appear by clicking [Preferences].

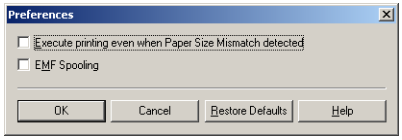

- When a checkmark is placed for [Execute printing even when Paper Size Mismatch detected], the print is made on the currently loaded paper, regardless of the setting in [Output Size] on the [Page Setup] sheet.
  When a checkmark is not placed, if the setting in [Output Size] for a print job to be performed differs from the setting in [Output Size] for a print job that has been performed most recently, a message appears on the Printer Status Window, stopping the printing operation. However, for a print job that is performed immediately after you turn ON/OFF the printer or you pull out and insert the cassette, a message does not appear on the Printer Status Window and the print is made on the currently loaded paper, regardless of the setting in [Output Size].

- [EMF Spooling] allows you to specify the spool file format. If a checkmark is placed, the file is spooled in metafile format. If it is not, the file is spooled in RAW format.
  If you have the printer set up as a network printer, the file is always spooled in RAW format.

[Quality] Sheet

The [Quality] sheet allows you to specify the following printing preferences.

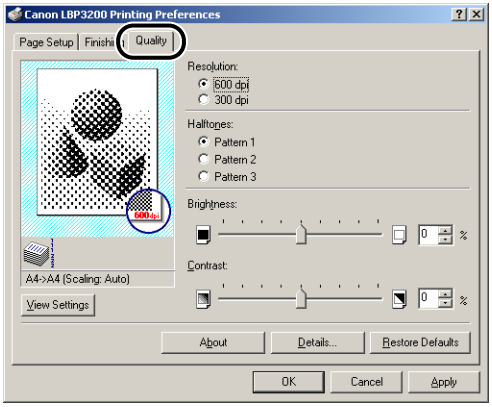

■ Resolution

Allows you to specify the fineness of images.

Select [600 dpi] or [300 dpi].

■ Halftones

Allows you to select the halftone processing for printing color or gray-scale images.

[Pattern 1]	Suitable for printing general documents.
[Pattern 2]	Sharpness is applied when printing photographic image. To print an image of a person or for emphasizing the darkness.
[Pattern 3]	Colored letters and thin lines are printed more clearly.

■ Brightness / Contrast

To specify the settings, click the spin button for [Brightness] or [Contrast]. The settings can also be specified by dragging the slider rightward and leftward. You can specify from -80 to 80%.

■ Details

The dialog box shown below will appear by clicking [Details].

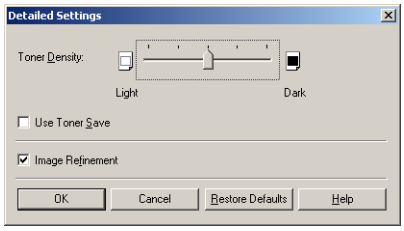

- To change the density settings, drag the slider for [Toner Density] rightward and leftward.
- If you place a checkmark for [Use Toner Save], you can save toner.
- If you place a checkmark for [Image Refinement], the printer will smooth jagged characters or graphics automatically.

IMPORTANT

Using the Toner Save mode may decrease print density making printed text look patchy.

[General] Sheet

Displays the printer name. Allows you to print a test page.

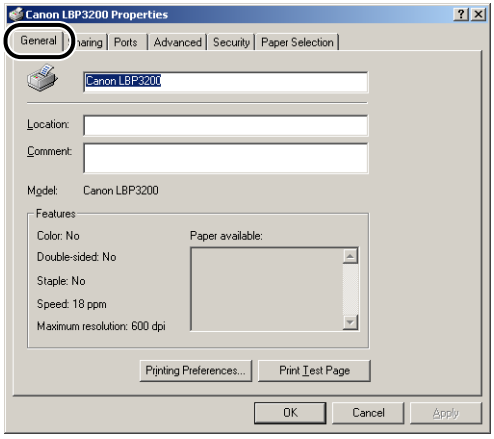

[Sharing] Sheet

Allows you to specify whether or not to share the printer.

NOTE

The [Sharing] sheet does not appear when the appropriate network settings is not configured. (See p. 3-40.)

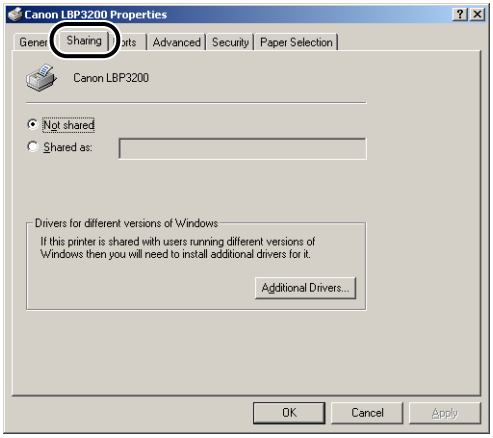

[Ports] Sheet

Allows you to add, delete, and configure a printer port.

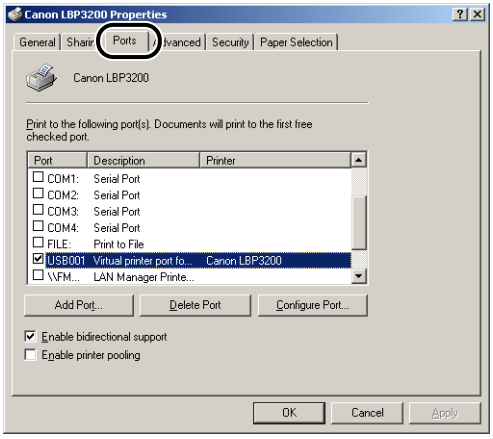

[Advanced] Sheet

Allows you to specify the detailed settings, such as the time when the printer is available and the spooling settings.

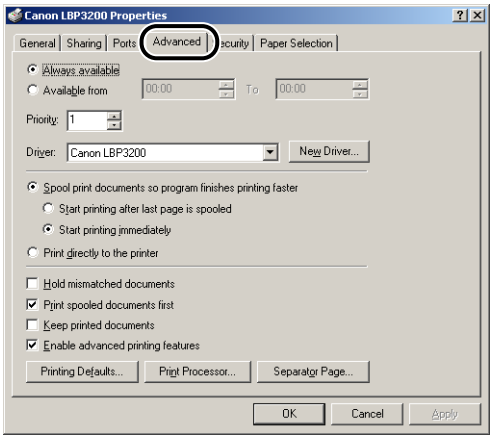

[Security] Sheet

Allows you to confirm the access permissions for each logged-on user.

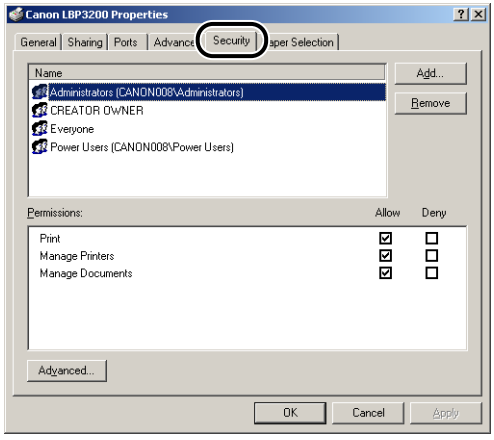

[Paper Selection] Sheet

Allows you to select custom paper.

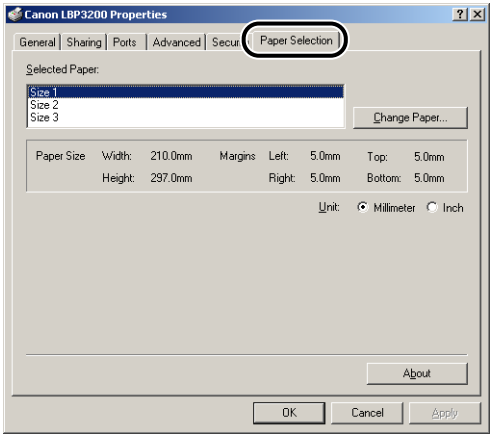

Printing Multiple Pages on One Sheet

Multiple pages can be printed on one sheet of paper.

1 **Display the [Page Setup] sheet.**

2 **From [Page Layout], select the page numbers to be printed on one sheet.**

The number of pages that can be selected is 1, 2, 4, 8, or 9 (Pages per Sheet).

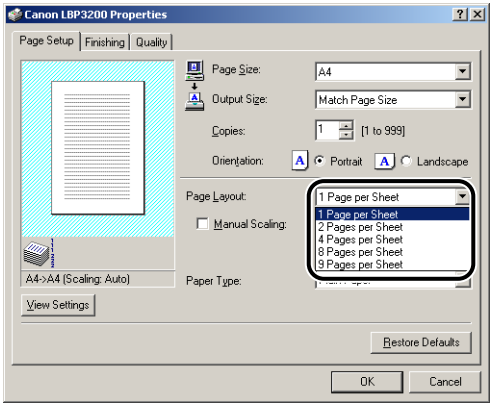

3 When 2, 4, 8, or 9 (Pages per Sheet) is selected for [Page Layout], [Page Order] appears. Select the desired page order.

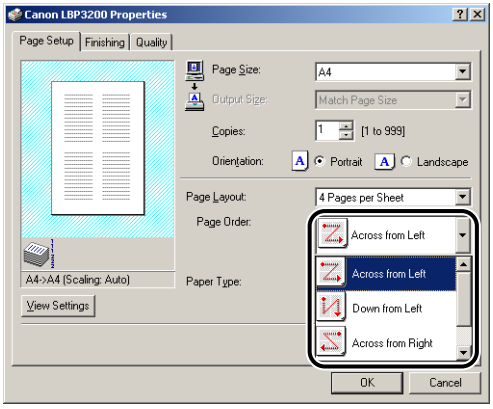

NOTE

- If you select 2, 4, 8, or 9 (Pages per Sheet), [Match Page Size] is set for [Output Size] automatically, disallowing you to select from [Output Size].
- The options under the [Page Order] pull-down menu differ depending on the orientation and the number of pages to be printed on one sheet.

4 Confirm the settings, then click [OK].

Scaling Print Output

You can select the scale when [1 Page per Sheet] is selected for [Page Layout].

The scale factor will be adjusted automatically when [Page Size] and [Output Size] are different.

The scale factor can be specified manually.

You can specify from 10 to 200 %.

Scaling a Document Automatically

1 **Display the [Page Setup] sheet.**

2 **Specify the document size in [Page Size].**

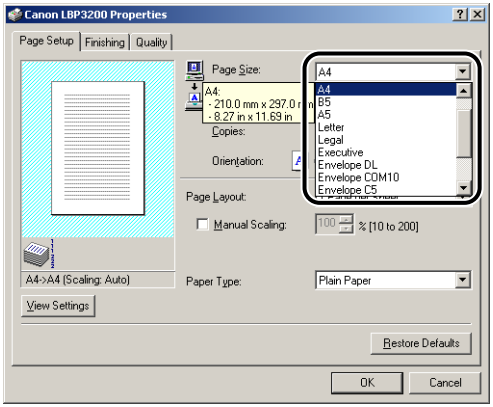

3 **Specify the paper size in [Output Size].**

4 **Confirm the settings, then click [OK].**

The scale factor will be set automatically depending on the sizes specified in [Page Size] and [Output Size].

Scaling a Document Manually

1 **Display the [Page Setup] sheet.**

2 **Specify the document size in [Page Size].**

3 **Specify the paper size in [Output Size].**

4 **Place a checkmark for [Manual Scaling], then specify the value in the spin box.**

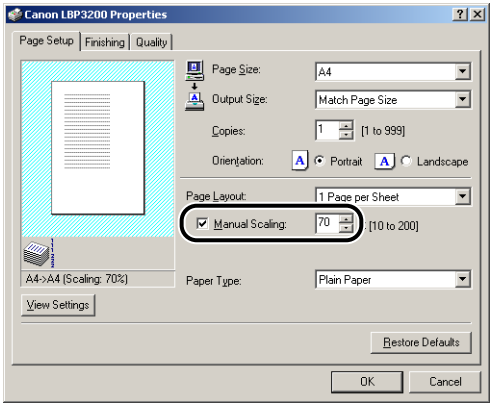

5 **Confirm the settings, then click [OK].**

Specifying a Custom Paper Size

Follow the procedure below to specify a desired paper size.

■ *For Windows 98/Me*

1 Display the [Page Setup] sheet.

2 Click [Custom Paper Size].

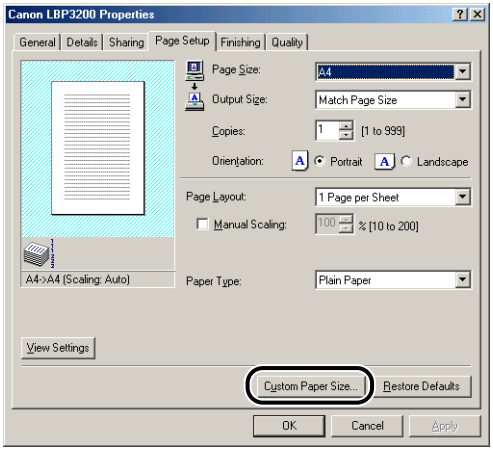

The [Custom Paper Size Settings] dialog box will appear.

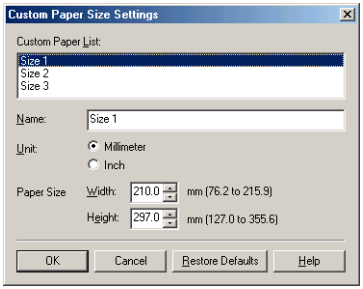

3 Specify the following items as needed.

[Custom Paper List]:	Displays the names of custom paper that are currently registered.
[Name]:	Enter the name of the custom paper to be registered. Up to 30 characters can be entered. As a default, [Size 1], [Size 2], and [Size 3] are registered.

[Unit]: Specify the units (Millimeter or Inch) to be used when setting the custom paper size.

[Paper Size]: Specify the height and width of the custom paper size (Height ≧ Width). Specify the custom paper size using portrait orientation (Height ≧ Width) within valid setting values. The valid setting values are from 76.2 to 215.9 mm in width, and from 127.0 to 355.6 mm in height.

4 Confirm the settings, then click [OK].

■ *For Windows 2000/XP*

1 Display the [Printers] (Windows XP: [Printers and Faxes]) folder, then click [Server Properties] from the [File] menu.

The [Printer Server Properties] dialog box will appear.

2 Display the [Forms] sheet, then place a checkmark for [Create a New Form]. Specify the following options as needed.

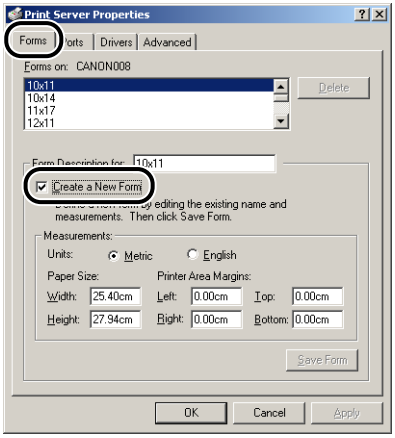

[Form Description for]: Allows you to enter a custom paper name. For Windows XP, [Form name] is displayed.

[Units]: Select either [Metric] or [English].

[Paper Size]: Specify the height and width of the custom paper size (Height ≧ Width). Specify the custom paper size using portrait orientation (Height ≧ Width) within valid setting values. The valid setting values are from 7.62 to 21.59 cm in width, and from 12.70 to 35.56 cm in height.

[Printer Area Margins]: Enter values directly. The valid setting values are more than 0.5 cm.

3 After confirming the settings, click [Save Form], and then click [Close].

4 Select the [Canon LBP3200] icon, then select [Properties] from the [File] menu.

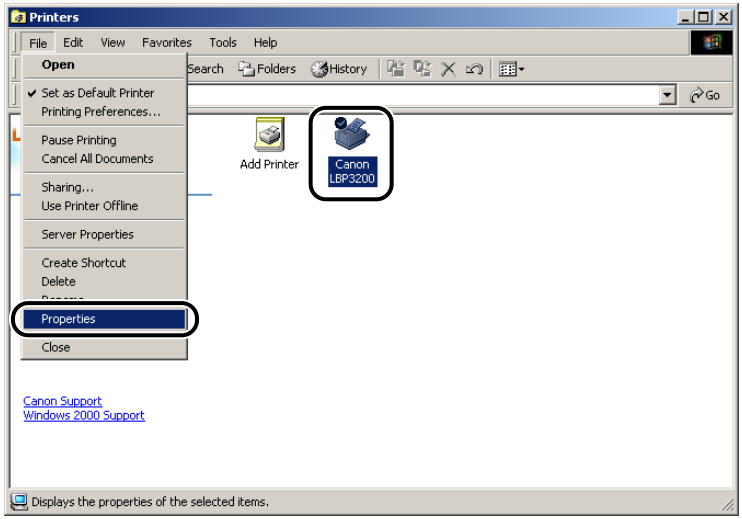

The [Printer Properties] dialog box will appear.

5 Display the [Paper Selection] sheet, then select custom paper to be changed from [Selected Paper].

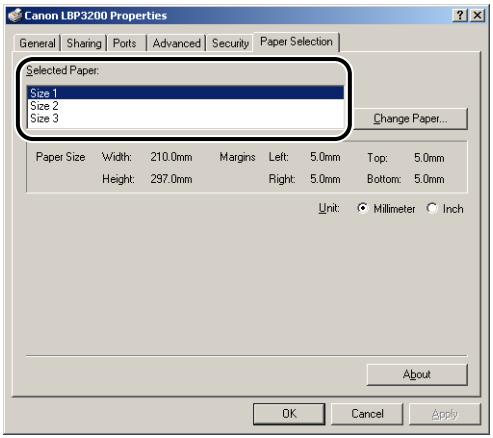

6 Click the [Change Paper] button.

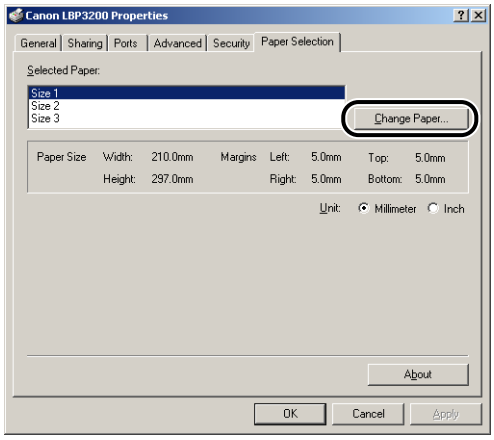

7 From [Available Paper], select custom paper to be used, then click [OK].

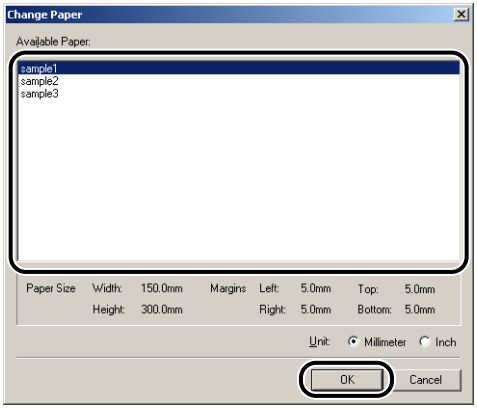

8 Confirm the settings, then click [OK].

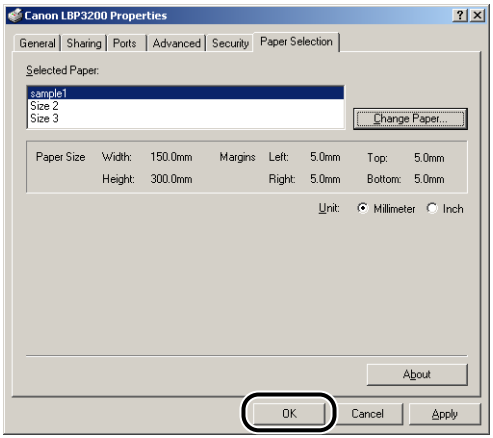

Specifying the Print Quality

The [Quality] sheet allows you to specify the following printing preferences.

1 Display the [Quality] sheet.

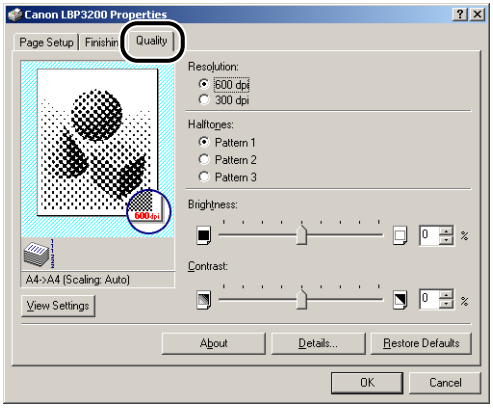

2 Specify [Resolution].

Select [600 dpi] or [300 dpi].

3 Specify [Halftones].

[Pattern 1]	Suitable for a typical document.
[Pattern 2]	Prints photographs vividly. Suitable for images in which persons are emphasized or contrast is high.
[Pattern 3]	Prints color characters and thin lines beautifully.

4 Specify [Brightness] and [Contrast].

To specify the settings, click the spin button for [Brightness] or [Contrast]. The settings can also be specified by dragging the slider rightward and leftward. You can specify from -80 to 80 %.

5 Confirm the settings, then click [OK].

Specifying the Toner Density

1 Display the [Quality] sheet.

2 Click [Details].

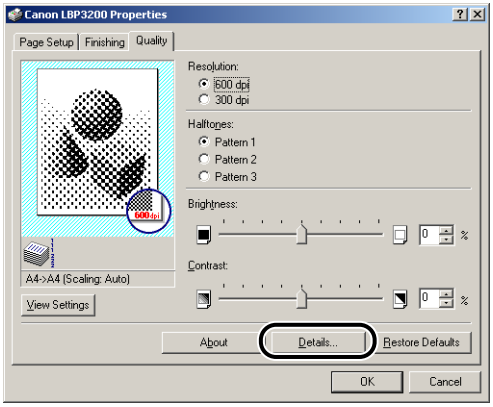

The [Detailed Settings] dialog box will appear.

3 To change the density settings, drag the slider for [Toner Density] rightward and leftward.

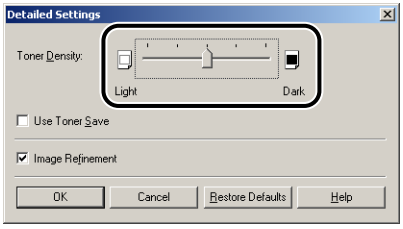

If you place a checkmark for [Use Toner Save], you can save toner.

IMPORTANT

Using the Toner Save mode may decrease print density making printed text look patchy.

4 Confirm the settings, then click [OK].

Specifying the Image Refinement

The printer detects and smoothes jagged characters or graphics automatically.

1 Display the [Quality] sheet.

2 Click [Details].

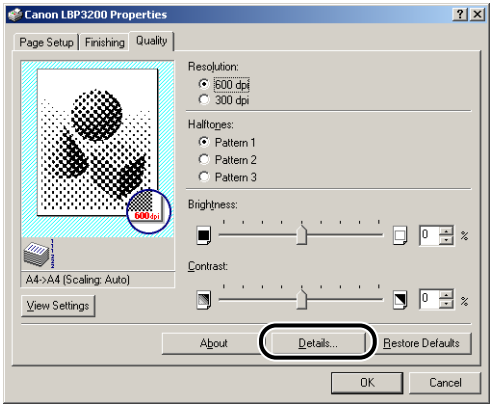

The [Detailed Settings] dialog box will appear.

3 Place a checkmark for [Image Refinement].

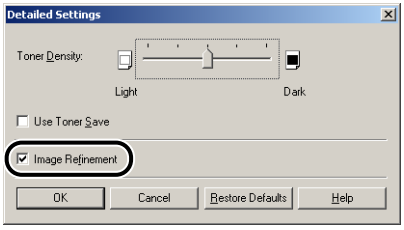

4 Confirm the settings, then click [OK].

Viewing the Printer Settings / Restoring the Default Settings

You can view all the printing preferences that are specified in the [Page Setup], [Finishing], and [Quality] sheets or restore those default settings at one time.

First make sure that any one of the [Page Setup], [Finishing], or [Quality] sheet is displayed, then follow the procedure below.

NOTE

Preview will be displayed on each sheet. You can view the print image in Preview.

Viewing the Printer Settings

1 Click [View Settings].

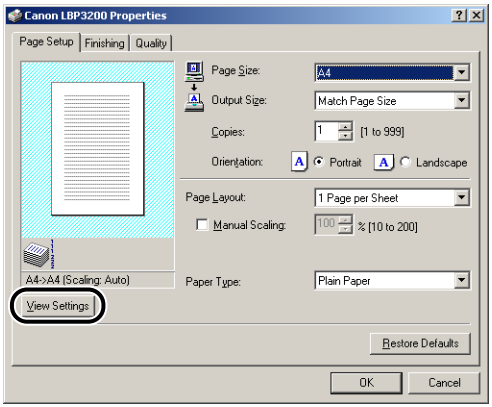

The [View Settings] dialog box will appear.

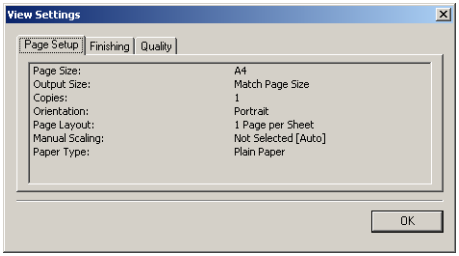

By clicking the [Page Setup], [Finishing], or [Quality] tab, you can view the print preferences specified for each sheet.

2 Click [OK].

The previous sheet will re-appear.

Restoring the Default Settings

To restore the default settings, click [Restore Defaults].

You can restore the default settings only in the same sheet or dialog box as [Restore Defaults] displayed.

The default settings in the [Page Setup], [Finishing], and [Quality] sheets cannot be restored all at once.

Printer Status Window

The Printer Status Window shows the printer status of the LBP3200 (such as the operation status and print job information) with messages, animations, sounds, and icons.

NOTE

To activate a sound, your computer must have a PCM synthesizer, and have the driver for PCM synthesizer installed.

Using the Printer Status Window

The functions on the Printer Status Window are the same on both Windows 98/Me and Windows 2000/XP.

For more details on operations, see the Online Help.

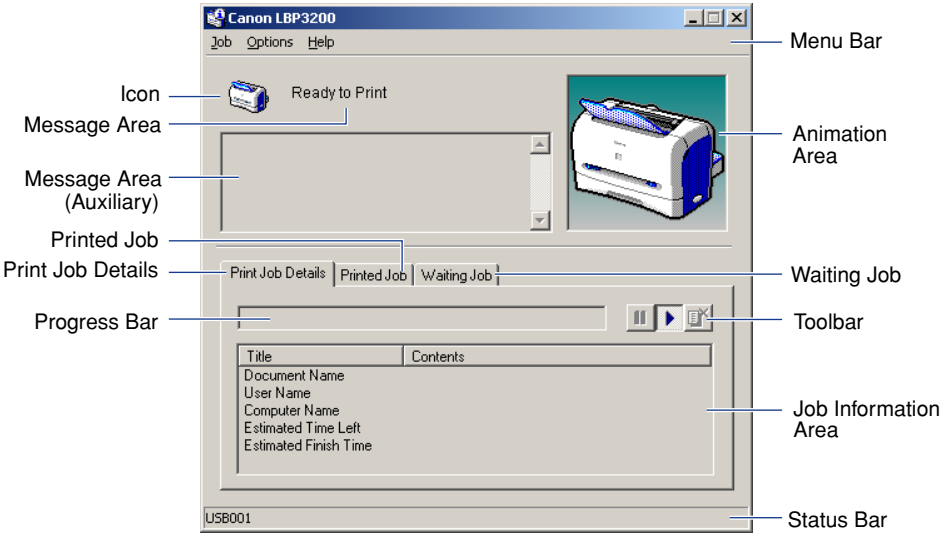

■ Menu Bar

Job Menu	Performs a print job operation (pause, resume, and cancel). The print jobs for which you have no access permission are grayed out.
Options Menu	Allows you to specify the environment settings for the Printer Status Window, and performs cleaning.
Help Menu	Displays the Online Help.

■ Other Functions

Icon		Displays the current printer status.
Message Area		Displays the current printer status with a short message.
Message Area (Auxiliary)		Displays additional information when an error occurs, etc.
Animation Area		Shows an animated graphic indicating the current printer status. The graphic background changes from blue (normal) to orange (when an error occurs), or to red (when a service error occurs).
[Print Job Details]	:Progress Bar	Indicates the progress of the current print job by showing the number of printed pages or changing graphic background.
	:Toolbar	Performs a print job operation (pause, resume, and cancel) during print. The printing jobs for which you have no access permission are grayed out.
	:Job Information Area	Displays a document name, user name, computer name, remaining time, and estimated finish time for the current printing job.
[Printed Job]	:Job Information Area	Displays a document name, result, owner, pages, finish time for the printed job.
[Waiting Job]	:Toolbar	Performs a print job operation (pause, resume, and cancel) for waiting jobs. The waiting jobs for which you have no access permission are grayed out.
	:Job Information Area	Displays a document name, status, owner, and start time for waiting jobs.
Status Bar		Indicates how the printer is connected (Local or Network). Instructions for operating the menu are displayed during menu operation.

Displaying the Printer Status Window

To display the Printer Status Window, click the Printer Status Window icon on the Windows taskbar, then click [Canon LBP3200] from the pop-up menu. When multiple units of LBP3200 are installed, the menu for each of those units is displayed.

The Printer Status Window appears automatically during a print job or when an error occurs. If [When Starting Printing] is not selected for [Display Printer Status Window] in the [Preferences] dialog box in the [Options] menu, the Printer Status Window does not appear during a print job.

Closing the Printer Status Window

Right-click the Printer Status Window icon on the Windows taskbar, then select [Exits all printers' Printer Status Windows]. Then, the icon will also disappear.

Setting Preferences

The Preferences menu allows you to display the Printer Status Window automatically, specify the sound settings and make the Printer Status Window to monitor the printer status.

■ [Display Printer Status Window] Group

- When Starting Printing
  - The Printer Status Window appears automatically each time the print starts.
- Only when Errors Occur
  - The Printer Status Window appears only when an error occurs while printing.

■ [Tone Settings] Group

- Enabled All
  - A sound is played with a messaged displayed.
- Enable only when Error Occurs
  - A sound is played only when an error occurs.
- Disabled
  - No sound is played.

■ [Monitor Printer Status] Group

- Always
  - The Printer Status Window always monitors the printer status.
- Only while Displaying Printer Status Window
  - The Printer Status Window monitors the printer status only while it is displayed.
- Only while Printing
  - The Printer Status Window monitors the printer status only while printing.

■ Always Display on Top

The Printer Status Window is always on top of all the other windows on the desktop.

1 Select [Preferences] from the [Options] menu.

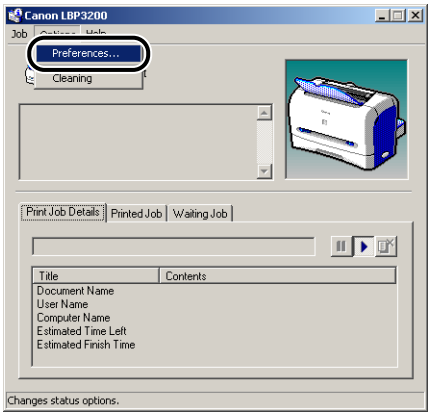

The [Preferences] dialog box will appear.

2 Confirm each of the settings, then click [OK].

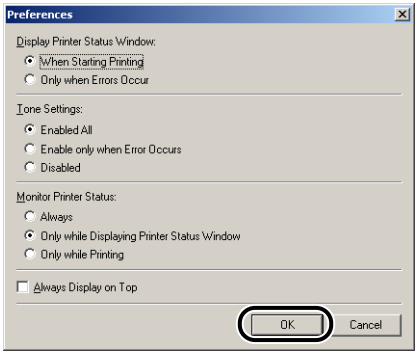

NOTE

For detailed information on operations for the Printer Status Window, see the Online Help.

Network Printer Status

The status of a network printer can be displayed on the client's Printer Status Window as well as on the print server's.

If the print server is not running when the Printer Status Window starts up, the status will be displayed automatically when the print server starts up.

- Printer Status of Print Server
  - Displays the status of the local print jobs and the client's print jobs.
  - The print job can be paused, resumed and canceled in [Print Job Details] and [Waiting Job].
  - Plays a sound.
  - If the print server is Windows 2000/XP, the status is not displayed if no one is logged on.
- Client's Printer Status
  - The print job can be paused, resumed, and canceled in [Print Job Details] from the client during print.
  - The print job cannot be paused, resumed and canceled in [Waiting Job].
  - A sound is played only from the client whose user or computer name is verified by the print server.

NOTE

To display the status for a print job that is requested via a network, an environment in which one of the following protocols can be used is required.

- TCP/IP
- NetBEUI

If the protocol you use is IPX/SPX only, the status is not displayed.

Routine Maintenance

5
CHAPTER

This chapter describes printer maintenance, such as how to replace the toner cartridge or how to clean the printer.

Replacing the Toner Cartridge 5-2
- Before Replacing the Toner Cartridge 5-2
- Replacing the Toner Cartridge 5-6
- Cleaning 5-12
- Precautions for Handling the Toner Cartridge 5-13
- Storing the Toner Cartridge 5-15

Cleaning the Printer 5-16

Moving the Printer. 5-18
- Moving the Printer 5-19

Handling the Printer 5-22
- Precautions for Handling the Printer 5-22
- Precaution for Storing the Printer 5-23

Replacing the Toner Cartridge

This section describes how to replace or handle the toner cartridge and the precautions for storage.

IMPORTANT

The product code of the toner cartridge is indicated on the location shown in the figure. Purchase a toner cartridge of the same product code when you need it.

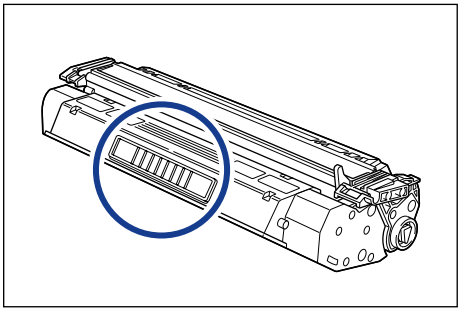

NOTE

With the toner cartridge for this printer, up to approx. 2500 sheets of paper (A4) can be printed. This number of sheets is calculated assuming that a typical document (with a printing ratio of approximately 5 % and print density set to default) is printed. The toner consumption differs depending on document contents. As a document with few blanks, such as graphics, consumes toner much, if you often print this type of documents, the life of the toner cartridge is shortened.

Before Replacing the Toner Cartridge

A toner cartridge is a consumable product. If there is not sufficient toner, white streaks may appear and the print may be too thin or uneven in lengthwise direction of paper. In this case, follow the procedure below before replacing the toner cartridge. You may be able to print for a while until toner runs out completely.

CAUTION

Take care not to allow the toner to come into contact with your hands or clothing, as this will dirty your hands or clothing. If they become dirty, wash them immediately with cold water. Washing with warm water will set the toner and make it impossible to remove the toner stains.

IMPORTANT

- Do not touch the high-voltage contacts in the front cover, as this may result in damage to the printer.

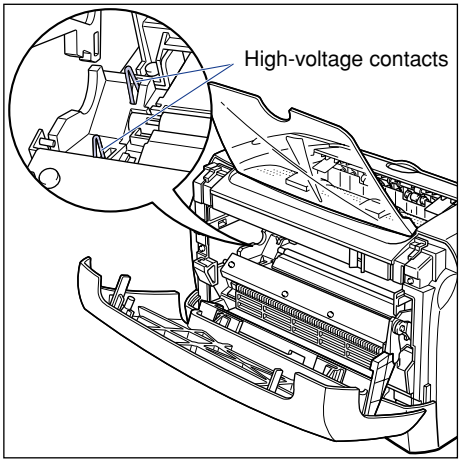

1 Open the front cover.

When opening the front cover, put your hands into the opening on both sides of the printer, then slowly and strongly pull it out.

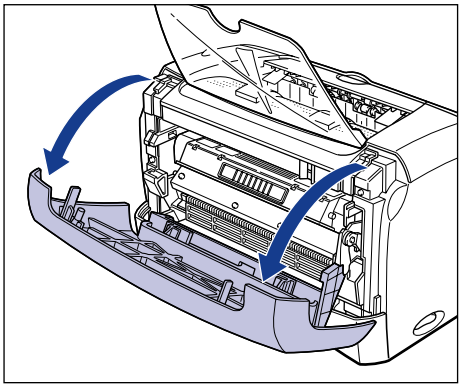

2 Take the toner cartridge out of the printer.

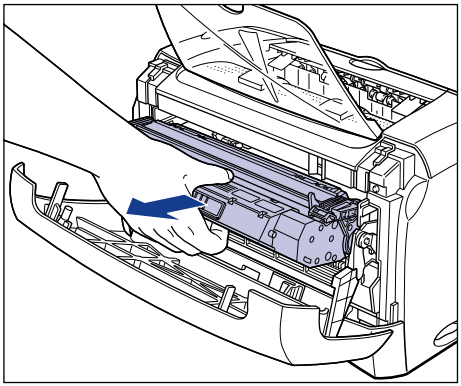

IMPORTANT

- Print quality may deteriorate if you touch or damage the drum inside the toner cartridge. Be careful not to touch the drum or open the drum protective shutter. Be careful not to hold or touch the portions that are not described in this procedure. This may result in damage to the printer.

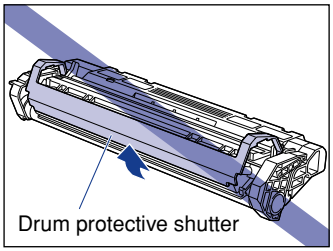

- Do not expose the toner cartridge to direct sunlight or strong light.

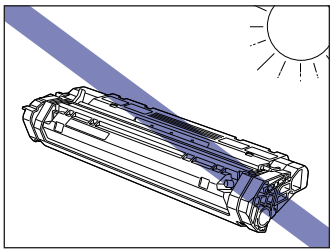

3 Hold the toner cartridge as shown in the figure, and gently shake it 5 or 6 times to evenly distribute the toner inside.

Be careful not to spill the toner.

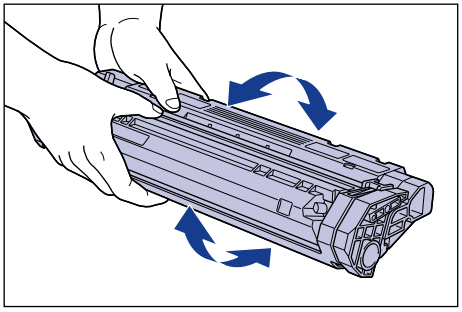

IMPORTANT

- If toner is not distributed evenly, this may result in a deterioration in print quality. Be sure to carry out this procedure properly.
- Be sure to shake the toner cartridge gently; otherwise, the toner may spill out.

4 While aligning the projection on each side of the toner cartridge with the toner cartridge guide, push the toner cartridge completely.

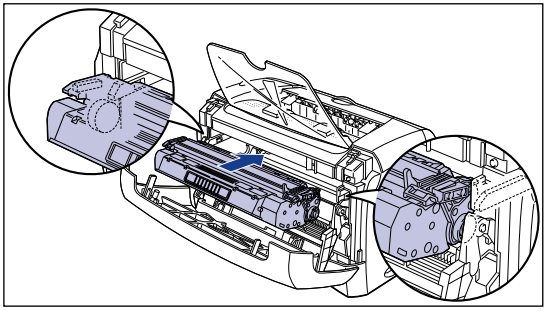

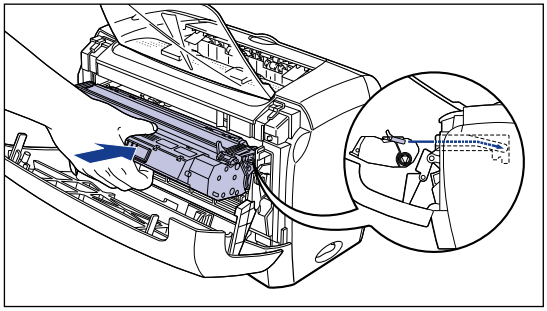

5 Close the front cover.

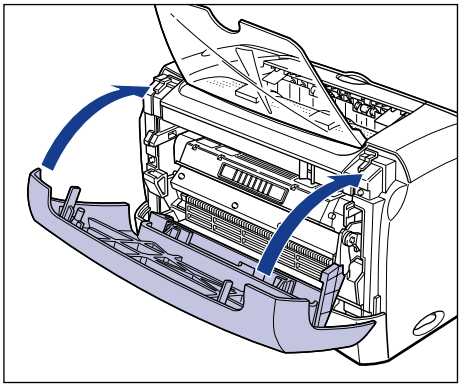

IMPORTANT

- If you cannot close the front cover, confirm that the toner cartridge is set properly. If you close the front cover forcefully, this may cause damage to the printer.
- Do not leave the front cover open for a long time after setting the toner cartridge.

If the print is too thin even after performing the operation above, replace the toner cartridge with a new one.

Replacing the Toner Cartridge

Follow the procedure below to replace the toner cartridge with a new one.

After replacing the toner cartridge, be sure to perform cleaning. For instructions on how to perform cleaning, see "Cleaning," on p. 5-12.

WARNING

Do not burn or throw a used toner cartridge into open flames, as this may cause the toner remaining inside the cartridge to ignite, resulting in burns or a fire.

CAUTION

Take care not to allow the toner to come into contact with your hands or clothing, as this will dirty your hands or clothing. If they become dirty, wash them immediately with cold water. Washing with warm water will set the toner and make it impossible to remove the toner stains.

IMPORTANT

- Use only the toner cartridge exclusive to this printer.
- Do not touch the high-voltage contacts in the front cover, as this may result in damage to the printer.

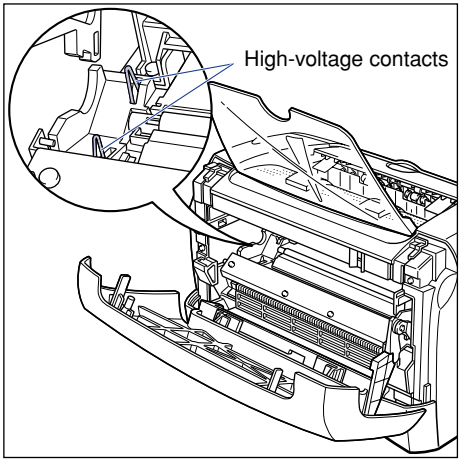

1 Open the front cover.

When opening the front cover, put your hands into the opening on both sides of the printer, then slowly and strongly pull it out.

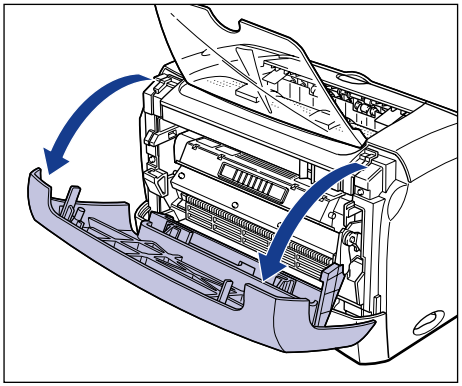

2 Take the toner cartridge out of the printer.

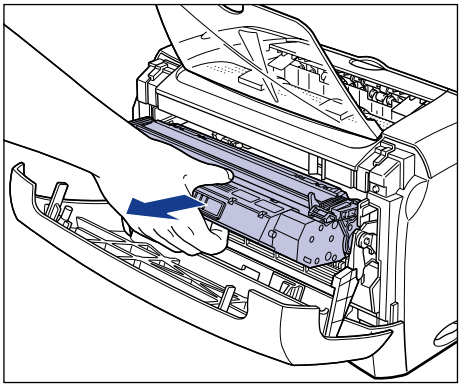

3 Take a new toner cartridge out of the protective bag.

Use scissors to open the protective bag so as not to damage the toner cartridge.

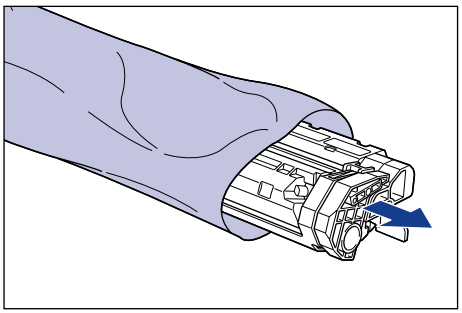

IMPORTANT

- Keep the protective bag for the toner cartridge. It may be required when taking out the toner cartridge for printer maintenance.
- Print quality may deteriorate if you touch or damage the drum inside the toner cartridge. Be careful not to touch the drum or open the drum protective shutter. Be careful not to hold or touch the portions that are not described in this procedure. This may result in damage to the printer.

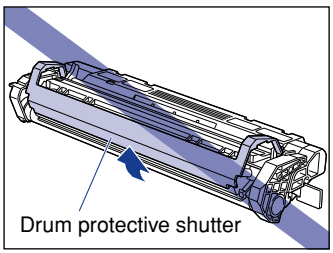

• Do not expose the toner cartridge to direct sunlight or strong light.

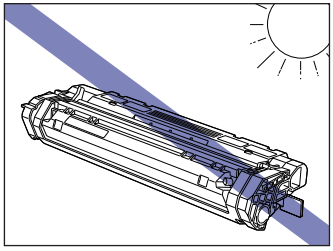

4 Hold the toner cartridge as shown in the figure, and gently shake it 5 or 6 times to evenly distribute the toner inside.

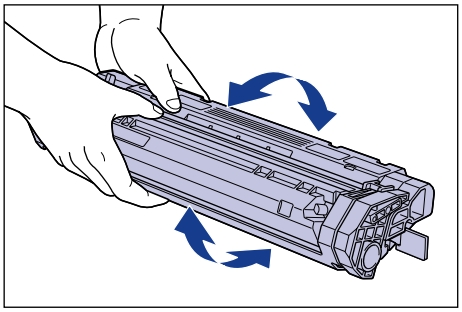

IMPORTANT

- If toner is not distributed evenly, this may result in a deterioration in print quality. Be sure to carry out this procedure properly.
- Be sure to shake the toner cartridge gently; otherwise, the toner may spill out.

5 Place the toner cartridge on a flat surface, then pull out the sealing tape (approx. 45 cm in length) while supporting the toner cartridge.

Fold the tab on the sealing tape as shown in the figure, and pull it out straight.

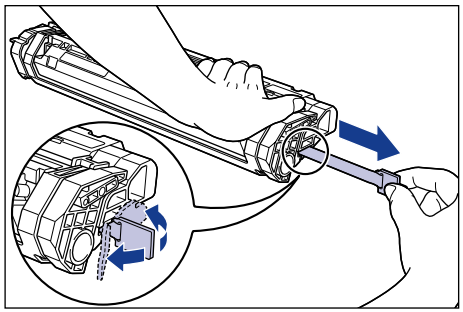

CAUTION

If the sealing tape is pulled out forcefully or stopped at midpoint, toner may spill out. If toner gets into your eyes or mouth, immediately wash it away with water and consult a physician.

IMPORTANT

- Do not pull the sealing tape diagonally, upwards, or downwards. If the tape is severed, it may become difficult to pull it out completely.

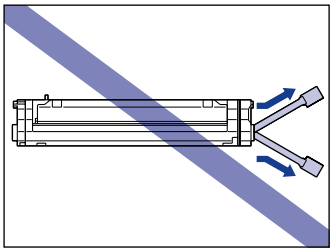

- Pull out the sealing tape completely from the toner cartridge. If any tape remains in the toner cartridge, it may result in a deterioration in print quality.
- When pulling out the sealing tape, be careful not to hold the drum protective shutter with you hands.

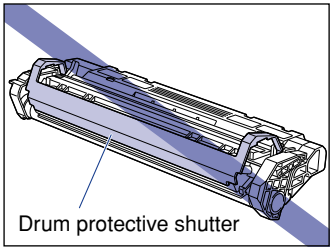

- Once you take the toner cartridge out of the protective bag, install it in the printer as soon as possible.
- Dispose of the sealing tape according to local regulations.

6 While aligning the projection on each side of the toner cartridge with the toner cartridge guide, push the toner cartridge completely.

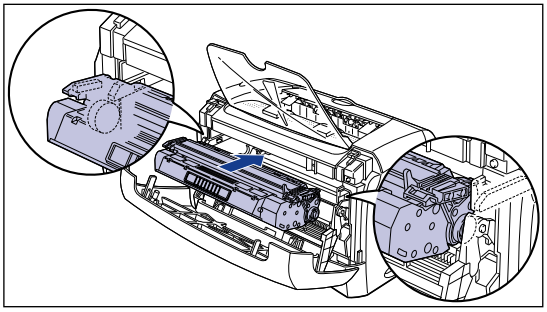

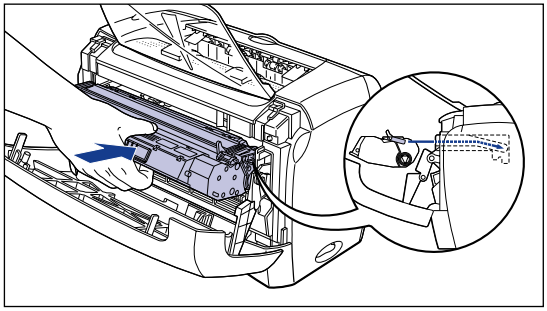

7 Close the front cover.

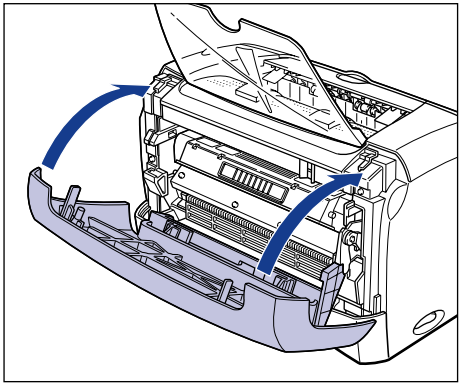

IMPORTANT

- If you cannot close the front cover, confirm that the toner cartridge is set properly. If you close the front cover forcefully, this may cause damage to the printer.
- Do not leave the front cover open for a long time after setting the toner cartridge.

Next, perform cleaning. See "Cleaning," on p. 5-12.

Cleaning

After replacing the toner cartridge, be sure to perform cleaning.

1 **Set blank sheet of paper (A4 or Letter size) in the manual feed slot or cassette.**

2 **Click the icon on the taskbar and select [Canon LBP3200].**

The Printer Status Window will appear.

3 **Click [Options] → [Cleaning].**

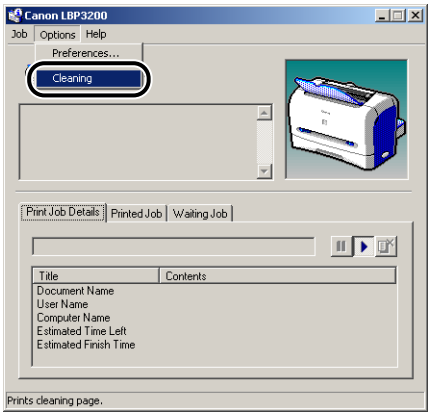

Cleaning will start.

The message <Cleaning> appears on the Printer Status Window.

When paper is output and the message disappears, cleaning is completed.

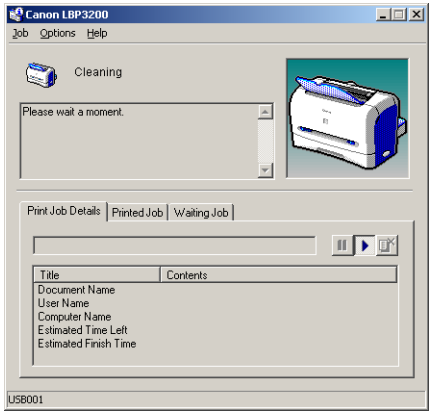

IMPORTANT

- You cannot perform cleaning during print or print paused.
- You cannot cancel cleaning once cleaning starts.

NOTE

It takes approximately 3 minutes to perform cleaning.

Precautions for Handling the Toner Cartridge

The toner cartridge consists of delicate parts. Handling the toner cartridge without caution may lead to damage to the toner cartridge or a deterioration in print quality. Be careful of the following points when removing or installing the toner cartridge.

WARNING

Do not burn or throw a used toner cartridge into open flames, as this may cause the toner remaining inside the cartridge to ignite, resulting in burns or a fire.

CAUTION

Take care not to allow the toner to come into contact with your hands or clothing, as this will dirty your hands or clothing. If they become dirty, wash them immediately with cold water. Washing with warm water will set the toner and make it impossible to remove the toner stains.

IMPORTANT

- Print quality may deteriorate if you touch or damage the drum inside the toner cartridge. Be careful not to touch the drum or open the drum protective shutter. Be careful not to hold or touch the portions that are not described in this procedure. This may result in damage to the printer.

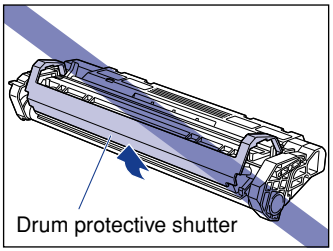

- Do not expose the toner cartridge to direct sunlight or strong light.

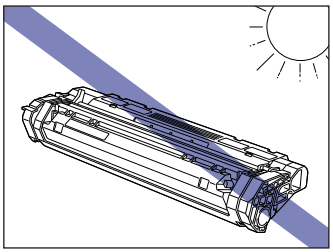

- When handling the toner cartridge, properly hold it with an arrow face up as shown in the figure. Do not set it vertically or upside-down.

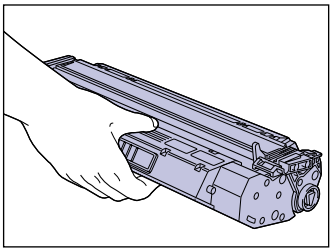

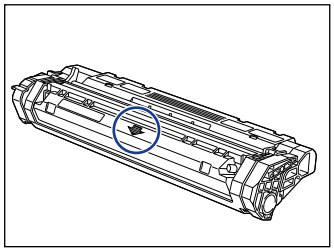

- Never attempt to disassemble or modify the toner cartridge.
- If the toner cartridge is brought to an environment where the temperature differs extremely, condensation may occur both inside and outside of the toner cartridge. If you are going to install in a warm room the toner cartridge that was stored in a cold place, leave the toner cartridge stored in the protective bag for over one hour so that it can adapt to the ambient temperature.
- Be sure to use a new toner cartridge within the expiration date indicated on the package.
- Using a genuine Canon toner cartridge is recommended.
- Keep the toner cartridge away from the products that generate magnetic waves, such as a display or computer.
- A toner cartridge is a magnetic product. Keep the toner cartridge away from products that may be damaged by magnetic waves, such as a floppy disk or disk drive. This may lead to damage to data.

Storing the Toner Cartridge

Be careful of the following points for storing a new toner cartridge or handling the toner cartridge that are taken out of the printer for maintenance or transportation.

IMPORTANT

- Do not take a new toner cartridge out of the protective bag until it is ready to be used.
- If you take the toner cartridge out of the printer for servicing the printer or removing paper jams, place the toner cartridge into the original protective bag, or wrap it with a thick cloth immediately.
- Do not place it vertically or upside-down. Store the toner cartridge in the same orientation as when installed in the printer.
- Do not store the toner cartridge in a place exposed to direct sunlight.
- Do not store the toner cartridge in a hot or humid place, or a place where the temperature and humidity can change significantly.
- Storing temperature range: 0 to 35 °C (32 to 95 °F)
- Storing humidity range: 35 to 85 % RH (no condensation)
- Do not store the toner cartridge in a place where corrosive gases, such as ammonia, are generated, or where a considerable amount of salt is contained in the air, or where there is a lot of dust.
- Keep the toner cartridge out of the reach of small children.
- Keep the toner cartridge away from products that may be damaged by magnetic waves, such as a floppy disk or disk drive.

■ Condensation

Even within the storable humidity range, water drops may develop both inside and outside of the toner cartridge due to the difference in temperature. The development of water drops is called condensation. Condensation will adversely affect the quality of the toner cartridge.

Cleaning the Printer

While you use the printer for a long period of time, when you find dust or dirt on the outer surfaces, clean the printer. When cleaning the printer, be careful of the following points in order to prevent an electrical shock or printer malfunctions.

WARNING

- **When cleaning the printer, first turn OFF the power switch, disconnect the USB cable, then unplug the power plug. Failure to observe these steps may result in a fire or electrical shock.**
- **Do not use alcohol, benzene, paint thinner, or other flammable substances. Check detergent for flammability prior to use. If flammable substances come into contact with a high-voltage area inside the printer, it may result in a fire or electrical shock.**

IMPORTANT

- Be careful not to use a cleaning agent other than water or a mild detergent diluted with water, as this may deform or crack the plastic materials in the printer.
- When using a mild detergent, be sure to dilute it with water.
- Grease or oil does not have to be applied to this printer. Be sure not to apply grease or oil.

1 **Press "○" of the power switch to turn OFF the printer ①, disconnect the USB cable ②, then unplug the power plug from the AC power outlet ③.**

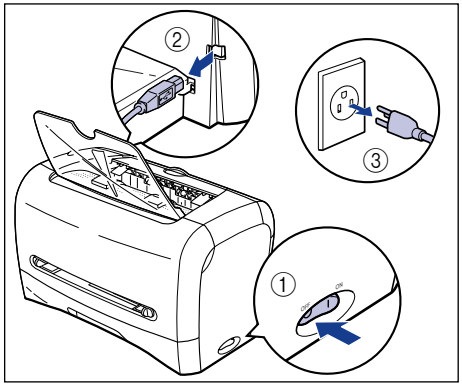

2 Firmly wring a soft cloth dampened with water or a mild detergent diluted with water, and wipe off the dirt.

If you use a mild detergent for cleaning, be sure to wipe away the detergent with a soft cloth dampened with water.

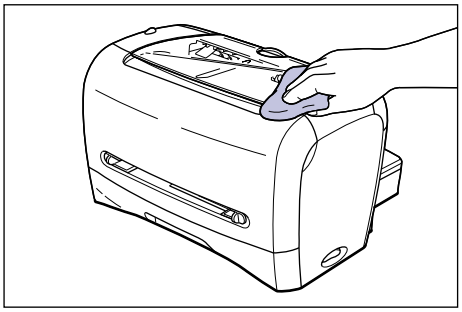

3 After wiping off dirt, wipe the printer with a dry cloth.

4 When the printer is completely dry, plug the power plug into the AC power outlet, then connect the USB cable.

Moving the Printer

When changing the location of the printer or moving the printer for maintenance, be sure to follow the procedure below.

WARNING

To avoid damage to the power cord and creating a fire hazard, always turn OFF the power switch, and disconnect the USB cable when moving the printer. Otherwise, the power cord or USB cable may be damaged, resulting in a fire or electrical shock.

CAUTION

- **The 220 - 240 V model weighs approximately 6.0kg and the 120 V model weighs approximately 6.5kg when the toner cartridge, the cassette, and the cassette protective cover are not attached. Be careful not to hurt your back or other portions of your body when carrying the printer.**
- **Be sure not to hold portions (e.g. the front or back of the printer, or paper delivery area) other than the portions indicated when carrying the printer. If you do so, you may drop the printer, resulting in personal injury.**

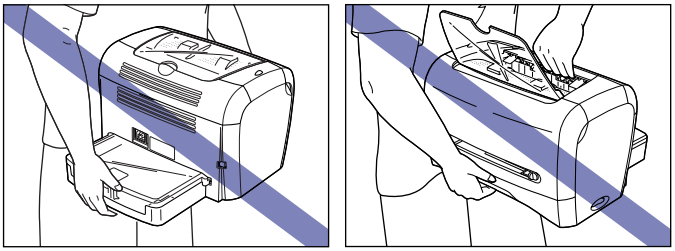

Moving the Printer

Follow the procedure below to transport the printer.

1 **Press "○" of the power switch to turn OFF the printer ①, disconnect the USB cable ②, then unplug the power plug from the AC power outlet ③.**

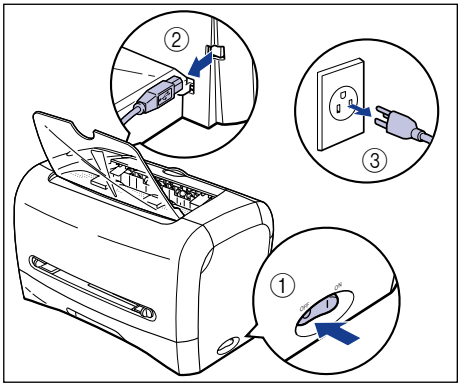

2 **Remove the power cord.**

3 **Close the face-down delivery tray if it is open.**

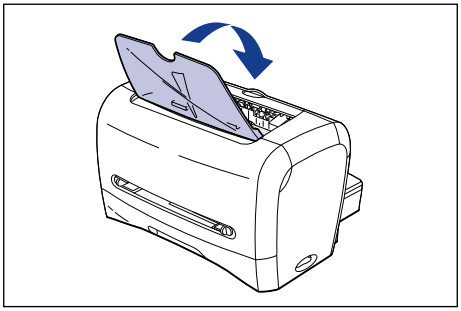

4 Pull out the cassette.

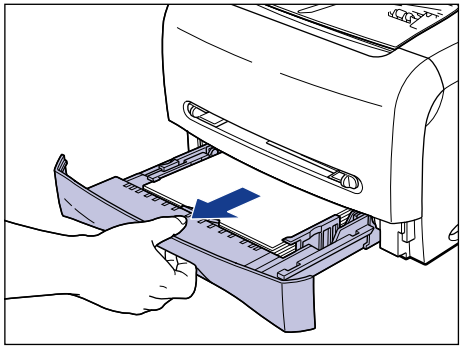

5 Remove the cassette protective cover at the back of the printer.

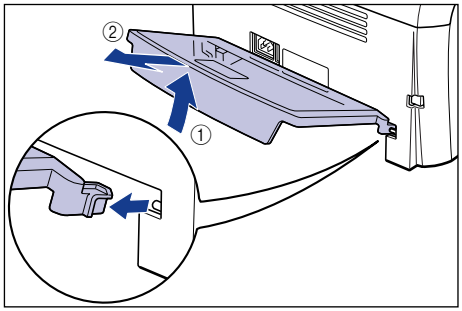

6 Hold the printer on both side as shown in the figure when carrying it.

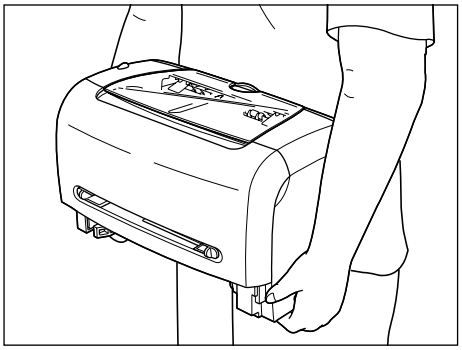

7 Set the printer down carefully at the installation site.

CAUTION

Set the printer down slowly and carefully. Be careful not to hurt your hands.

8 Install the cassette protective cover to the back of the printer.

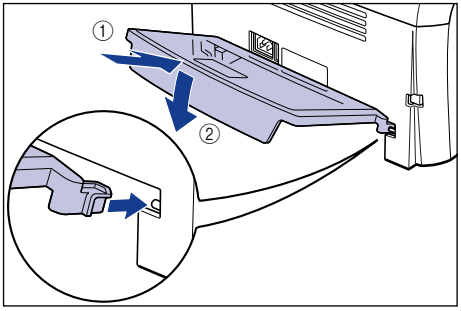

9 Set the cassette in the printer.

Push the cassette into the printer firmly until the front surface of the cassette is flush with that of the printer.

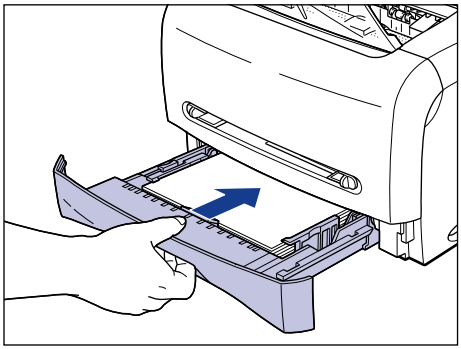

10 Plug the power cord.

11 Plug the power plug into the AC power outlet.

12 Connect the USB cable.

● Transporting the Printer

When transporting the printer for reasons such as relocating, remove the toner cartridge and store the printer and the parts in the package that they came in with the protective materials attached in order to prevent them from being damaged while being transported.
If the original package and packing materials are not available, find an appropriate box and packing materials and pack the printer and the parts appropriately.

Handling the Printer

This printer consists of various electronic and precise optical parts. Read the following section so that you can handle the printer properly.

IMPORTANT

The methods for handling the printer are also described in "Important Safety Instructions," on p. xv.

Precautions for Handling the Printer

Observe the precautions below so that high-quality printing can be maintained constantly.

IMPORTANT

- Do not place any heavy objects on the printer, face-down delivery tray, or cassette protective cover, as this may cause damage to the printer.

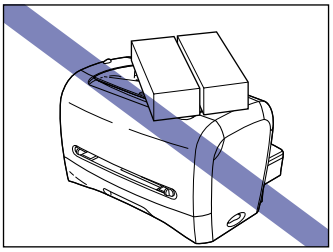

- Do not leave the front cover open longer than required. Exposing the printer to direct sunlight or strong light may result in a deterioration in print quality.
- Do not give vibration on the printer during print; otherwise, print quality may deteriorate.

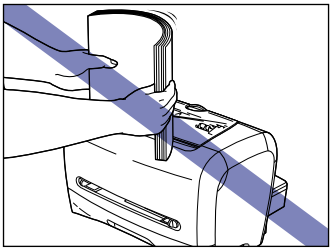

- Do not open the front cover during print; otherwise, the printer may be damaged.
- Carefully handle the face-down delivery tray, delivery selection cover, and front cover when opening and closing them; otherwise, the printer may be damaged.

- If you want to attach a cover to the printer, turn OFF the power switch and allow the printer to cool down sufficiently before attaching a cover.
- If you do not plan to use the printer for a long period of time, unplug the power cord from the AC power outlet.
- Do not use or store the printer in a room where chemicals are used.
- The face-down delivery area and face-up delivery slot become extremely hot while printing or immediately after printing. When removing paper or paper jam, be careful not to touch the face-down delivery area, face-up delivery slot, and their surroundings.

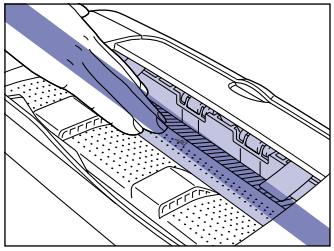

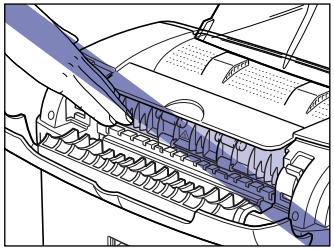

Precaution for Storing the Printer

If you do not plan to use the printer for a long period of time, store it in the following environment.

- Storing temperature range: 0 to 35 °C (32 to 95 °F)
- Storing humidity range: 35 to 85 % RH with no condensation

Troubleshooting

6
CHAPTER

This chapter describes the remedies for problems such as a paper jam or deterioration in print quality.

When You Have Trouble Printing 6-2

Paper Jams 6-3

Service Error Display 6-14

When a Fixing Unit Error Appears 6-15

When a Scanner Error or Service Error Appears 6-16

Print Quality Problems 6-17

When Nothing is Printed 6-21

Installation Problems 6-22

When Uninstallation Fails 6-23

Uninstalling the USB Class Driver 6-24

Installing by Selecting the USB Port (Windows 98/Me Only) 6-27

Problems During Network Installation 6-31

Miscellaneous Problems 6-32

When You Have Trouble Printing

If any problem occurs while you operate the printer, follow the flow chart shown below to check the problem.

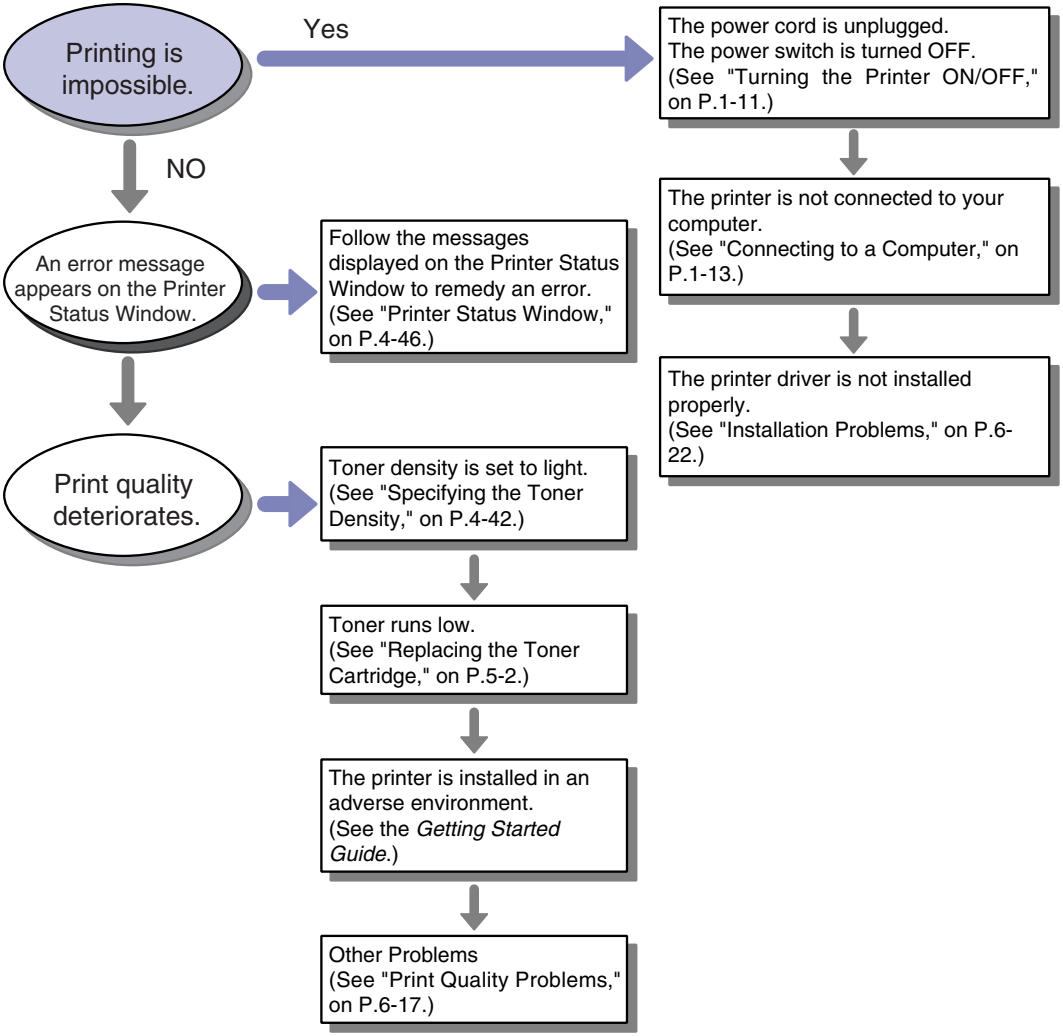

Paper Jams

The messages shown below will appear in the Printer Status Window when a paper jam occurs during print.

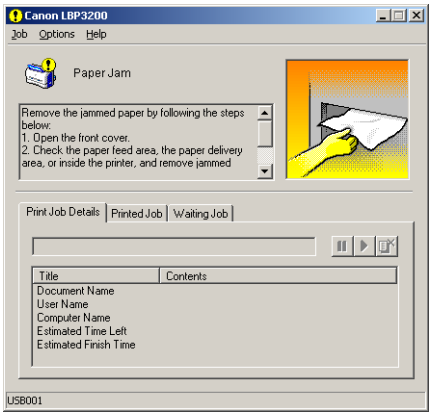

WARNING

There are some areas inside the printer which are subject to high-voltages. When removing jammed paper or when inspecting the inside of the printer, do not allow necklaces, bracelets, or other metal objects to touch the inside of the printer, as this may result in burns or electrical shock.

CAUTION

- **When removing jammed paper, take care not to allow the toner to come into contact with your hands or clothing, as this will dirty your hands or clothing. If they become dirty, wash them immediately with cold water. Washing with warm water will set the toner and make it impossible to remove the toner stains.**
- **When removing paper which has become jammed inside the printer, remove the jammed paper gently to prevent the toner on the paper from scattering and getting into your eyes or mouth. If the toner gets into your eyes or mouth, wash them immediately with cold water and immediately consult a physician.**
- **When removing jammed paper, take care not to cut your hands on the edges of the paper.**

- **The fixing unit and its surroundings inside the printer may become hot during use. When removing jammed paper or when inspecting the inside of the printer, do not touch the fixing unit and its surroundings, as doing so may result in burns or electrical shock.**

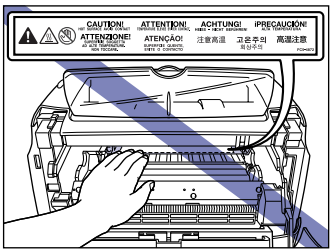

IMPORTANT

- Do not touch the high-voltage contacts in the front cover, as this may result in damage to the printer.

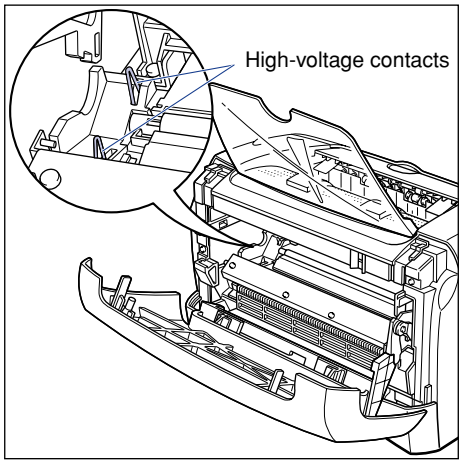

- Applying excess force may result in tearing paper or damaging the parts in the printer. When removing the jammed paper, pull the paper in the proper direction judging from the position of the paper.
- If paper is torn, be sure to find and remove any remaining portions.
- The error message may not disappear if you remove jammed paper without opening the front cover. In this case, open and close the front cover.

- Do not touch the transfer roller, as this may result in a deterioration in print quality.

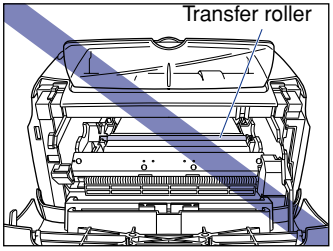

- The face-down delivery area and face-up delivery slot become extremely hot while printing or immediately after printing. When removing paper or paper jam, be careful not to touch the face-down delivery area, face-up delivery slot, and their surroundings.

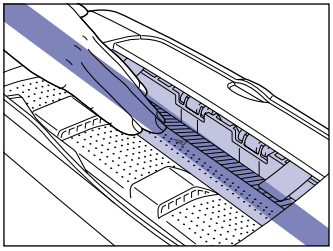

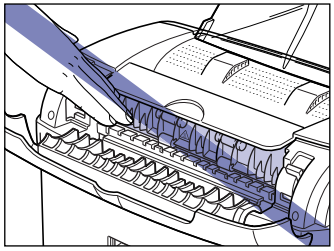

1 Open the front cover.

When opening the front cover, put your hands into the opening on both sides of the printer, then slowly and strongly pull it out.

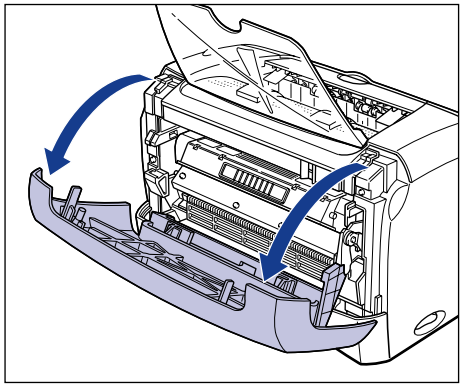

2 Take the toner cartridge out of the printer.

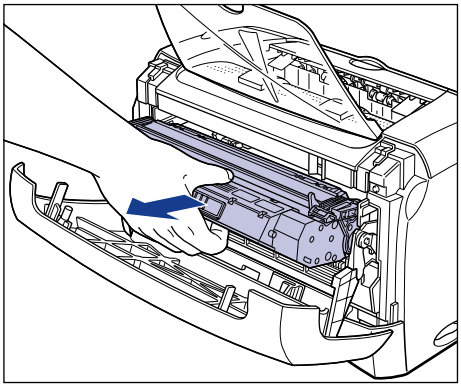

If you find jammed paper in this step, proceed to the next step without removing it.

IMPORTANT

- Print quality may deteriorate if you touch or damage the drum inside the toner cartridge. Be careful not to touch the drum or open the drum protective shutter. Be careful not to hold or touch the portions that are not described in this procedure. This may result in damage to the printer.

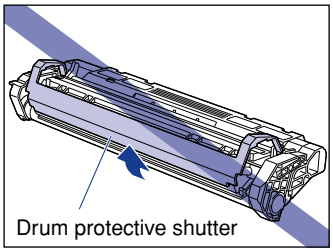

- Do not expose the toner cartridge to direct sunlight or strong light.

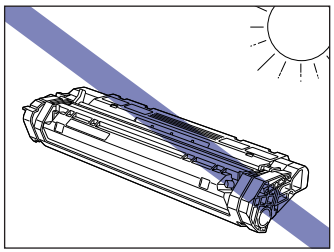

3 Place the toner cartridge into the protective bag.

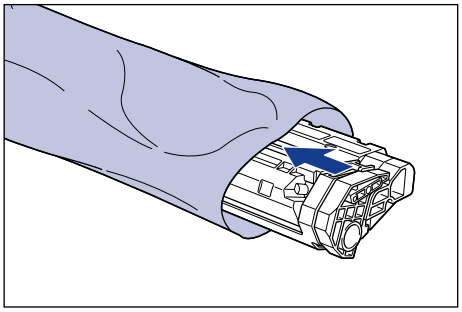

4 Open the delivery selection cover.

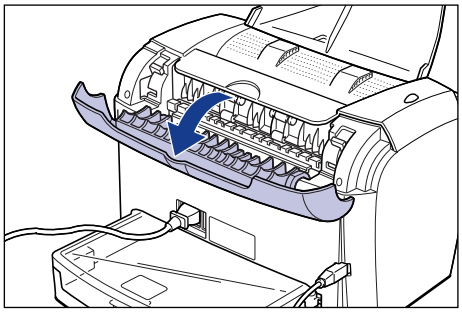

5 Tilt the two pressure release levers of the fixing unit toward you to release the pressure from the fixing unit.

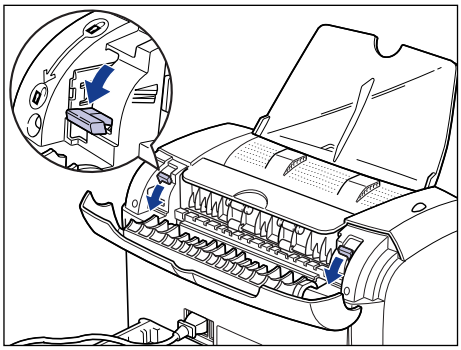

If you find jammed paper in this step, proceed to the next step without removing it.

6 Slowly pull out the paper jammed in the printer in the direction of the arrows.

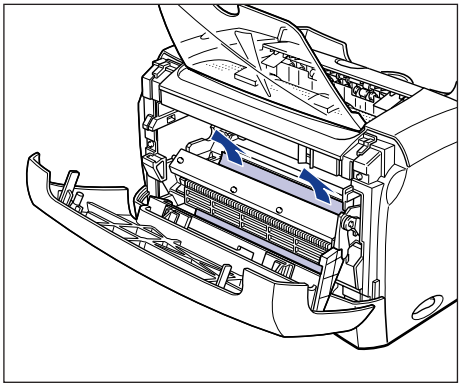

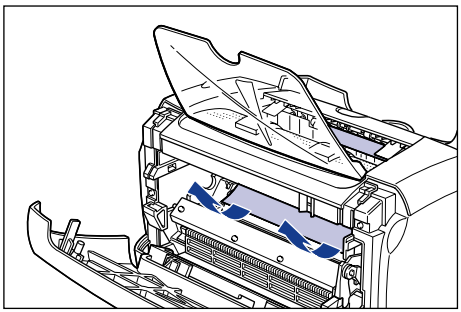

IMPORTANT

If you cannot remove jammed paper easily, proceed to the next step. Do not try to remove it forcefully.

7 Slowly pull out the paper jammed in the face-up delivery slot in the direction of the arrow.

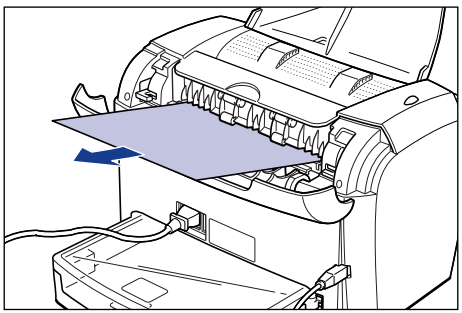

8 Slowly pull out the paper jammed in the face-down delivery area in the direction of the arrow.

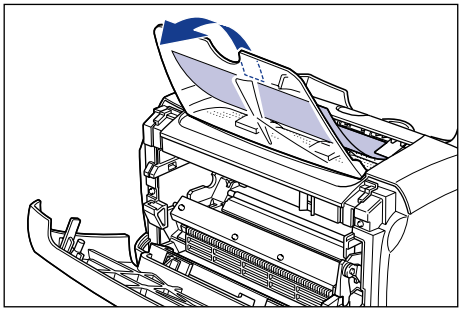

9 Close the front cover.

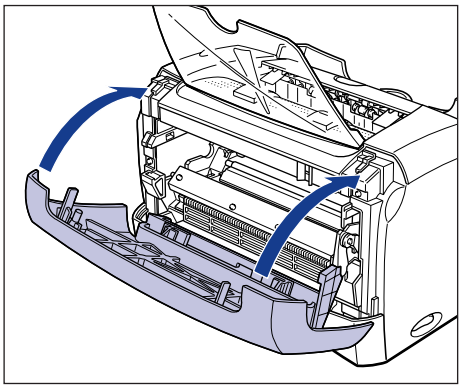

10 Pull out the cassette.

When pulling out the cassette, be sure to pull it out slowly and completely.

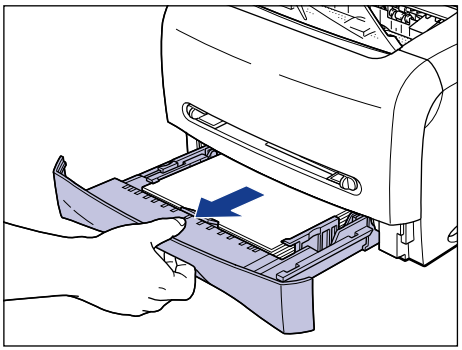

11 Slowly pull jammed paper in the direction of the arrow.

● When feeding paper from the cassette

❑ While putting your hand on paper as shown in the figure, slowly pull jammed paper in the direction of the arrow.

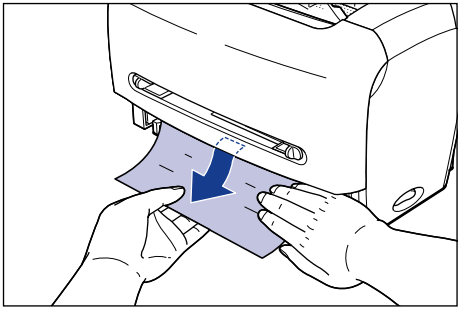

IMPORTANT

- When removing jammed paper, be sure to put your hand on paper. If you remove jammed paper without putting your hand on it, paper may be torn.
- Do not touch the paper feed roller. If you touch it, this may result in misfeeds.

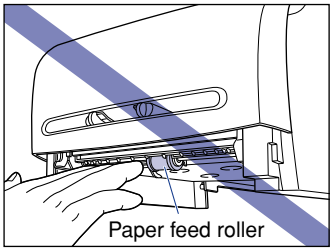

● When feeding paper from the manual feed slot

❑ Slowly pull out jammed paper in the direction of the arrow.

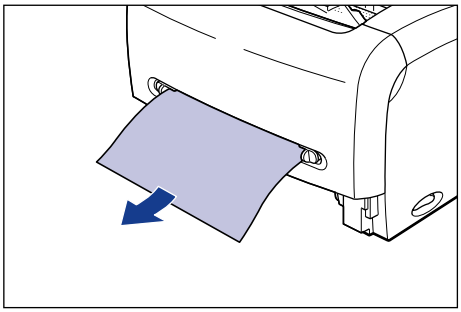

12 Return the pressure release levers of the fixing unit to the original positions.

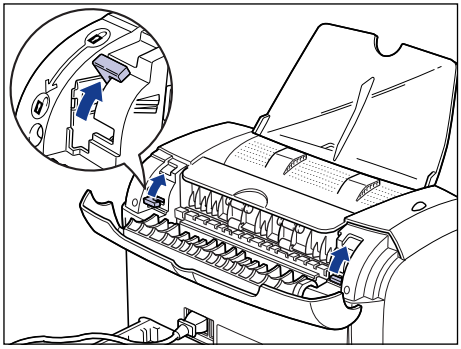

13 Close the delivery selection cover.

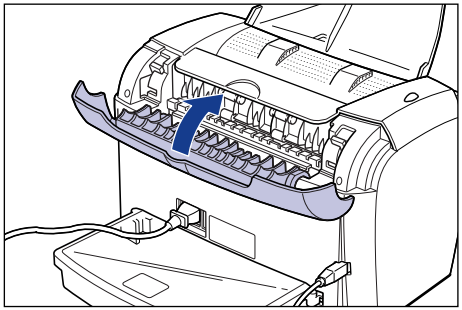

14 Open the front cover.

When opening the front cover, put your hands into the opening on both sides of the printer, then slowly and strongly pull it out.

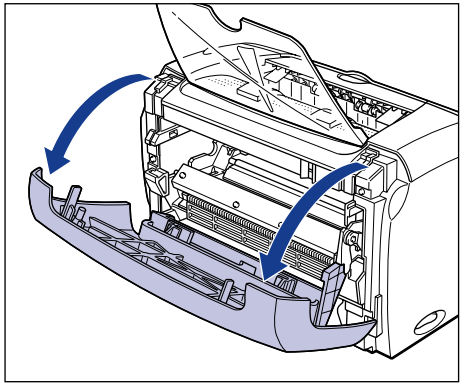

15 Take the toner cartridge out of the protective bag.

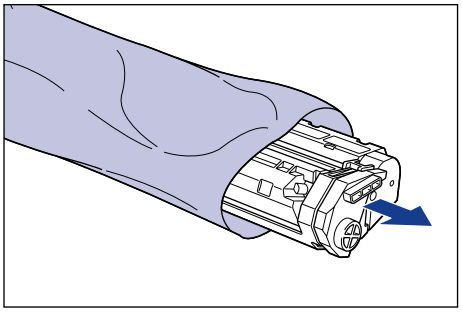

16 While aligning the projection on each side of the toner cartridge with the toner cartridge guide, push the toner cartridge completely.

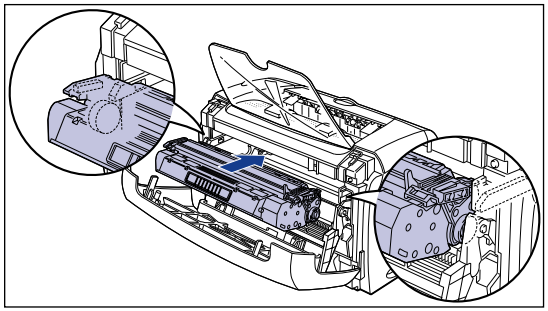

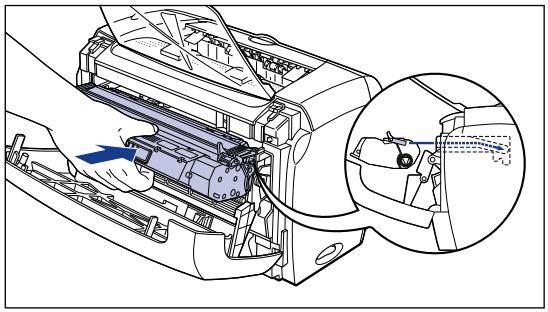

17 Close the front cover.

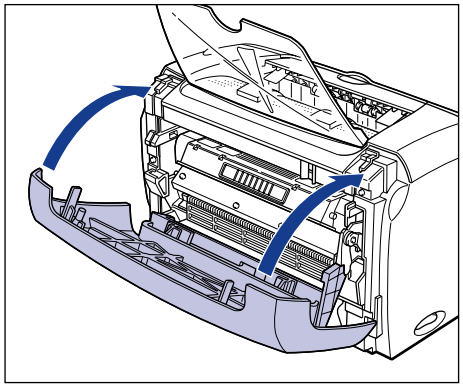

If paper that you set into the manual feed slot is jammed, set paper into the manual feed slot and perform printing operation again in this step.

IMPORTANT

- If you cannot close the front cover, confirm that the toner cartridge is set properly. If you close the front cover forcefully, this may cause damage to the printer.
- Do not leave the front cover open for a long time after setting the toner cartridge.

18 Set the cassette in the printer.

Push the cassette into the printer firmly until the front surface of the cassette is flush with that of the printer.

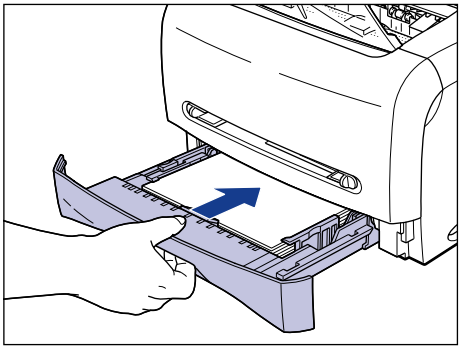

Service Error Display

If the printer has a problem and does not work properly, the service error messages shown below appear on the Printer Status Window.

Service Error	Cause	Remedy
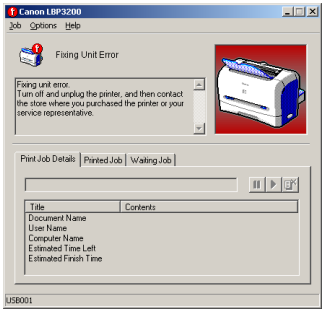	A problem occurs in the fixing unit.	Follow the instructions in (see "When a Fixing Unit Error Appears," on p. 6-15) to contact the store where you purchased this printer or your service representative.
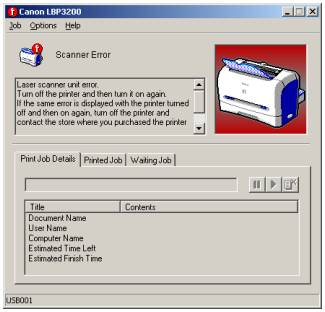	A problem occurs in the scanner.	Follow the instructions in (see "When a Scanner Error or Service Error Appears," on p. 6-16) to turn OFF the printer, then turn it ON again.
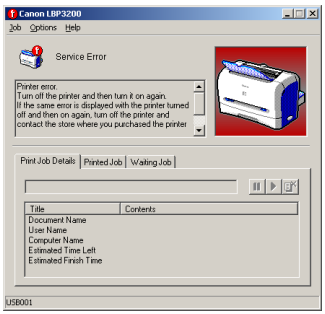	A problem occurs in the printer.	Follow the instructions in (see "When a Scanner Error or Service Error Appears," on p. 6-16) to turn OFF the printer, then turn it ON again.

When a Fixing Unit Error Appears

If a fixing unit error appears, follow the instructions below to contact the store where you purchased this printer or your service representative.

1 **Press "○" of the power switch to turn OFF the printer ①, disconnect the USB cable ②, then unplug the power plug from the AC power outlet ③.**

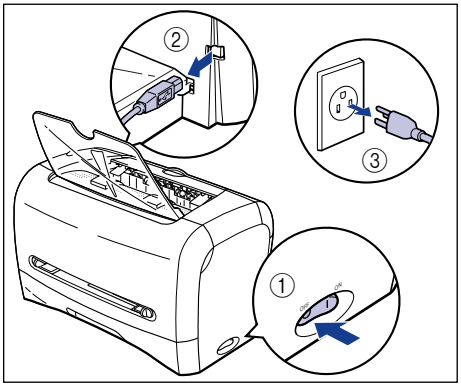

IMPORTANT

After a fixing unit error appears and you turn OFF the printer, never turn ON the printer again.

2 **Contact the store where you purchased this printer or your service representative.**

When you contact, inform them of symptoms.

When a Scanner Error or Service Error Appears

When a scanner error or service error appears, follow the instructions below to turn OFF the printer, then turn it ON again. The message may disappear.

1 **Turn OFF the printer, wait for 10 seconds or longer, then turn ON the printer again.**

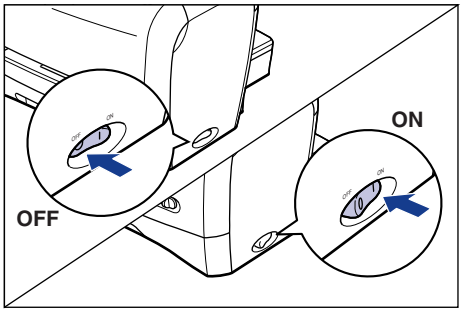

If the error message does not appear, the printer works properly. If the error message still appears, proceed to the next step.

2 **Press "○" of the power switch to turn OFF the printer ①, disconnect the USB cable ②, then unplug the power plug from the AC power outlet ③.**

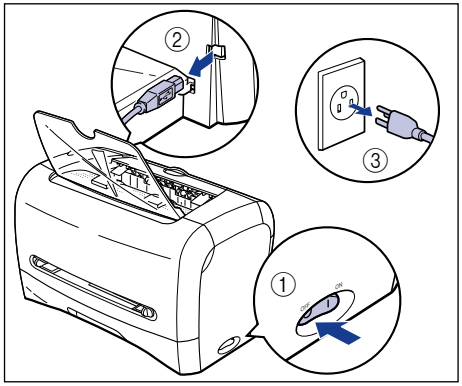

3 **Contact the store where you purchased this printer or your service representative.**

When you contact, inform them of symptoms.

Print Quality Problems

When a problem occurs while using this printer, take the following measures depending on the symptoms.

IMPORTANT

- If a message appears in the Printer Status Window, take remedies according to the message.
- For details on paper jams, see "Paper Jams," on p. 6-3.
- If a symptom that is not indicated in this section occurs, if the indicated remedy does not solve the problem, or if you cannot determine the problem, consult the store where you purchased this printer.

White streaks appear. (The print is too thin or uneven.)

Cause The toner in the toner cartridge runs low.

Remedy Take the toner cartridge out of the printer, slowly shake it to evenly distribute the toner inside. If this does not solve the problem, replace the toner cartridge with a new one. (See "Replacing the Toner Cartridge," on p. 5-2.)

The overall print is too thin.

Cause 1 [Toner Density] is not specified properly.

Remedy Drag [Toner Density] toward [Dark] in the printer driver.
In order to specify [Toner Density], click the [Details] button in the [Quality] sheet to open the [Detailed Settings] dialog box.

Cause 2 [Use Toner Save] is selected.

Remedy Remove a checkmark from [Use Toner Save] in the printer driver.
In order to specify [Use Toner Save], click the [Details] button in the [Quality] sheet to open the [Detailed Settings] dialog box.

The overall print is too dark.

Cause 1 [Toner Density] is not specified properly.

Remedy Drag [Toner Density] to [Light] in the printer driver.
In order to specify [Toner Density], click the [Details] button in the [Quality] sheet to open the [Detailed Settings] dialog box.

Cause 2	The printer is exposed to direct sunlight or strong light.
Remedy	Perform the same remedy as for Cause 1. If this does not solve the problem, move the printer to a place where it will not be exposed to direct sunlight or strong light. Alternatively, move the strong light source away from the printer.

A portion of a page is not printed.

Cause 1	The scale factor is not proper.
Remedy 1	Remove a checkmark from [Manual Scaling] in the printer driver. If you remove the checkmark, the scale factor will be set according to [Page Size] and [Output Size] automatically. In order to specify [Manual Scaling], open the [Page Setup] sheet.
Remedy 2	Place a checkmark for [Manual Scaling] in the printer driver and specify an appropriate scale factor according to the paper size to be used. In order to specify [Manual Scaling], open the [Page Setup] sheet.
Cause 2	The position for loading paper is not proper.
Remedy	Load paper properly. (See "Printing on Plain Paper / Heavy Paper / Label / Transparency," on p. 2-14, "Printing on Envelope," on p. 2-27, "Printing on Custom Paper," on p. 2-40.)
Cause 3	A document with no margins was printed.
Remedy	The printable area of this printer is an area excluding 5mm from the upper, bottom, right, and left of the paper sides. Therefore, you should secure a margin of over 5 mm around the data.

Printed paper is stained with black dots.

Cause	The fixing unit is dirty.
Remedy	Perform the cleaning operation. (See "Cleaning," on p. 5-12.)

Print position is misaligned.

Cause	[Top Margin] and [Paper Position] in the application are not specified properly.
Remedy	Specify [Top Margin] and [Paper Position] in the application properly. (See Instruction manual supplied with your application.)

The next page is printed from half way through the previous page.

Cause [Line Spacing] or [Lines/Page] in the application is not specified properly.

Remedy Specify [Line Spacing] and [Lines/Page] in the application so that data fits in one page, and print again. (See Instruction manual supplied with your application.)

Paper comes out wrinkled.

Cause 1 Paper is not loaded in the cassette properly.

Remedy Load paper in the cassette properly. (See "Printing on Plain Paper / Heavy Paper / Label / Transparency," on p. 2-14, "Printing on Envelope," on p. 2-27.)

Cause 2 Paper is set in the manual feed slot diagonally.

Remedy Set paper in the manual feed slot straight. (See "Printing on Plain Paper / Heavy Paper / Label / Transparency," on p. 2-14, "Printing on Envelope," on p. 2-27, "Printing on Custom Paper," on p. 2-40.)

Cause 3 Paper is damp.

Remedy Replace paper with an unpacked stack.

Nothing is printed on paper.

Cause 1 The toner cartridge was installed with the sealing tape still attached.

Remedy Take the toner cartridge out of the printer, pull away the sealing tape, and reinstall the toner cartridge. (See "Replacing the Toner Cartridge," on p. 5-2.)

Cause 2 A few sheets of paper were fed at a time.

Remedy Align the paper stack properly and load it again.

Cause 3 The front cover is not closed completely.

Remedy Close the front cover completely.

Paper comes out completely black.

Cause The drum in the toner cartridge has deteriorated.

Remedy Replace the toner cartridge with a new one. (See "Replacing the Toner Cartridge," on p. 5-2.)

White dust is attached to the printed transparencies.

Cause The transparencies were printed just after other type of paper was printed continuously.

Remedy If you make continuous print on other type of paper before printing on transparencies, the transparencies may come out with chipped paper attached. In this case, wipe and remove the chipped paper with a soft cloth.

Print is partially hollowed out.

Cause 1 Proper paper is not being used.

Remedy Replace the paper with a type that can be used with this printer. (See "Paper Requirements," on p. 2-2.)

Cause 2 Paper is damp.

Remedy Replace paper with an unpacked stack.

Cause 3 The drum in the toner cartridge has deteriorated.

Remedy Replace the toner cartridge with a new one. (See "Replacing the Toner Cartridge," on p. 5-2.)

Paper curls.

Cause 1 Paper is damp.

Remedy Replace paper with an unpacked stack.

Cause 2 Proper paper is not being used.

Remedy Replace the paper with a type that can be used with this printer. (See "Paper Requirements," on p. 2-2.)

Cause 3 Paper was delivered into the face-down delivery area.

Remedy If you are using paper that curls easily, change the paper delivery area to the face-up delivery slot. (See "Paper Delivery Area," on p. 2-11.)

Cause 4 Paper is too thin.

Remedy Specify [Paper Type] to [Plain Paper L] in the printer driver.
In order to specify [Paper Type], open the [Page Setup] sheet.

When Nothing is Printed

Check the following items if nothing is printed when performing a print job from the application.

1 **Check if an error message is displayed in the Printer Status Window.**

2 **Print a test page.**

- **For Windows 98/Me**

  ❑ Click the [Printer Properties] dialog box → [General] → [Print Test Page].

- **For Windows 2000/XP**

  ❑ Click the [Printer Properties] dialog box → [General] → [Print Test Page].

■ **When the test page is printed appropriately**

Printing can be performed from the CAPT software. Check your application to make sure that all the settings are specified properly.

■ **When the test page cannot be printed**

Uninstall the CAPT software, reinstall it, and print a test page again. (See "Uninstalling the CAPT Software," on p. 3-49.)

Installation Problems

If "USB Class Driver" and "LBP3200 Printer Driver" cannot be installed properly, follow the procedure below to check problems.

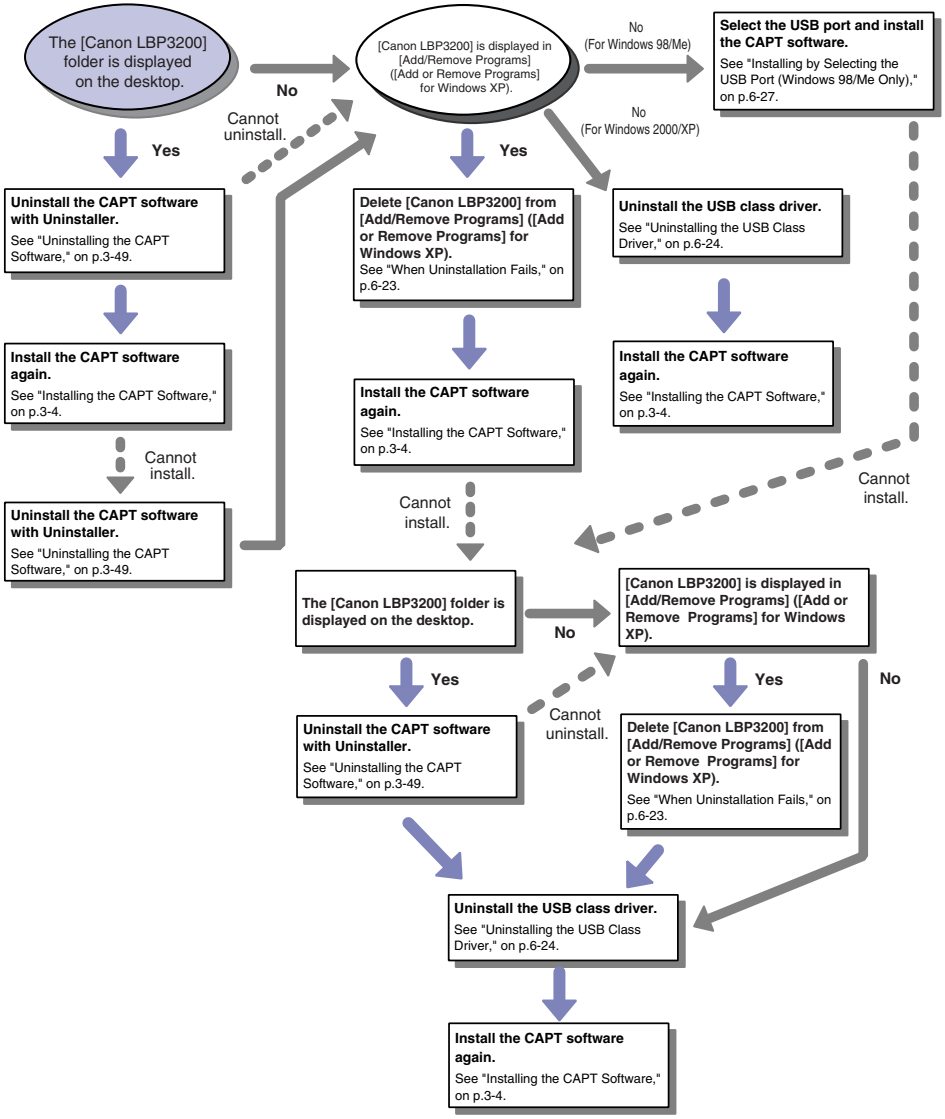

When Uninstallation Fails

If you cannot uninstall the CAPT software with Uninstaller that has been created at the installation, or if the [Canon LBP3200] folder is not displayed on the desktop, follow the procedure below to uninstall the CAPT software from [Add/Remove Programs] ([Add or Remove Programs] for Windows XP).

1 Click the [Start] menu → [Settings] → [Control Panel] → [Add/Remove Programs].

For Windows XP: Click the [Start] menu → [Control Panel] → [Add or Remove Programs].

2 Select [Canon LBP3200] in the [Add/Remove Programs] dialog box (the [Add or Remove Programs] dialog box for Windows XP), then click [Change/Remove] ([Add/Remove] for Windows 98/Me).

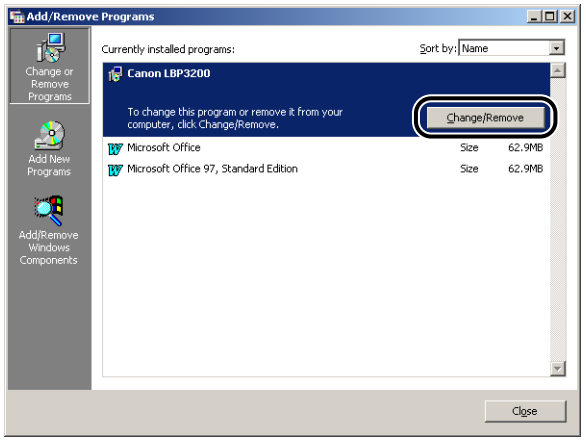

NOTE

If [Canon LBP3200] is not displayed in the [Add/Remove Programs] dialog box on Windows 2000 (the [Add or Remove Programs] dialog box for Windows XP), uninstall the USB class driver (see "Uninstalling the USB Class Driver," on p. 6-24), then install the CAPT software.

If [Canon LBP3200] is not displayed in the [Add/Remove Programs] dialog box on Windows 98/Me, install the CAPT software. (See "Installing by Selecting the USB Port (Windows 98/Me Only)," on p. 6-27.)

3 Click [OK].

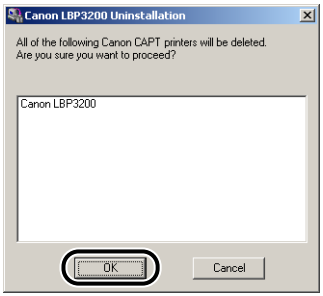

The uninstallation starts, and the dialog box for asking you for the restart of the computer appears.

4 Click [OK].

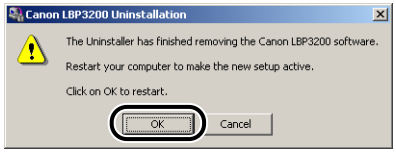

Windows will restart.

Uninstalling the USB Class Driver

Uninstalling the USB class driver is required when you cannot install the CAPT software properly after uninstalling it once or you cannot uninstall the CAPT software.

1 Make sure that the computer is connected to the printer with the USB cable and that the printer is turned ON.

2 Click the [Start] menu → [Settings] → [Control Panel] → [Add/Remove Programs].

For Windows XP: Click the [Start] menu → [Control Panel] → [Add or Remove Programs].

3 Make sure that [Canon LBP3200] is not displayed in the [Add/Remove Programs] dialog box (the [Add or Remove Programs] dialog box for Windows XP), then click [✕].

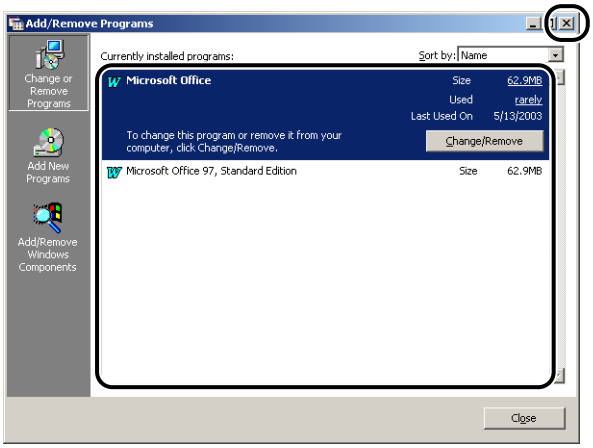

NOTE

If [Canon LBP3200] is displayed in the [Add/Remove Programs] dialog box (the [Add or Remove Programs] dialog box for Windows XP), delete [Canon LBP3200] in the [Add/Remove Programs] dialog box (the [Add or Remove Programs] dialog box for Windows XP). (See "When Uninstallation Fails," on p. 6-23.)

4 Select the [Start] menu → [Settings] → [Control Panel], then double-click the [System] icon.

For Windows XP Professional: Click the [Start] menu → [Control Panel] → [System].
For Windows XP Home Edition: Click the [Start] menu → [Control Panel] → [Printers and Other Hardware] → [System].

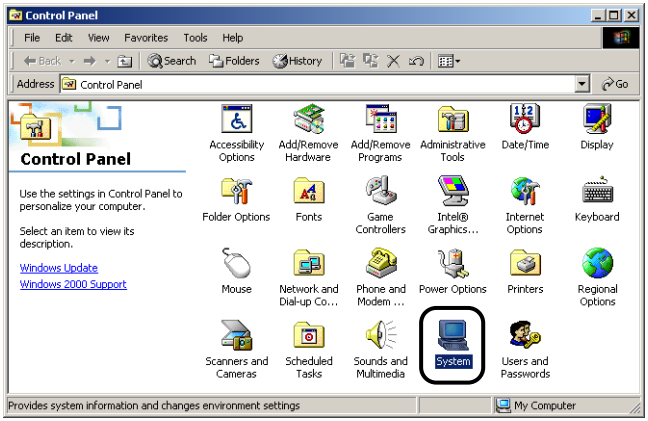

5 Click [Hardware] → [Device Manager], then double-click [Universal Serial Bus controllers].

For Windows 98/Me, display the [System Properties] dialog box, click the [Device Manager] tab, and then double-click [Universal Serial Bus controllers].

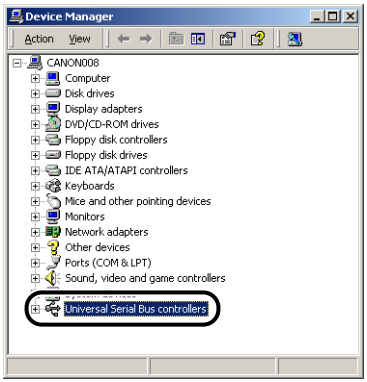

6 Delete only the following USB class driver under [Universal Serial Bus controllers].

For Windows 2000/XP, display [USB Printing Support], then select [Uninstall] from the [Action] menu.
For Windows 98, select [Canon LBP3200], for Windows Me, select [Canon CAPT USB Printer], and then click [Remove].

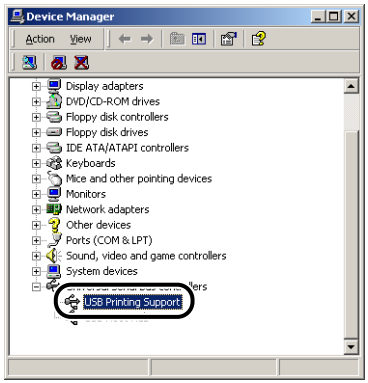

IMPORTANT

- If the USB class driver is under [Other Devices], the installation is not performed properly. According to your operating system, delete any one of [Canon LBP3200], [Canon CAPT USB Printer], or [Unknown devices].
- Never delete other devices or device drivers. If you delete them by mistake, Windows may not operate properly.

- If the USB class driver is not installed properly, [USB Printing Support] (for Windows 2000/XP), [Canon CAPT USB Printer] (for Windows Me), and [Canon LBP3200] (for Windows 98) are not displayed.

7 When the [Confirm Device Removal] dialog box appears, click [OK].

8 Click [Close].

[System Properties] will close.

9 Disconnect the USB cable from the computer, then restart Windows.

After Windows starts up again, reinstall the CAPT software. (See "Installing the CAPT Software," on p. 3-4.)

Installing by Selecting the USB Port (Windows 98/Me Only)

If the USB port cannot be detected automatically and the CAPT software cannot be installed properly, follow the procedure below to select the USB port and install the CAPT software again.

1 Put the supplied "User Software for LBP3200" CD-ROM into the CD-ROM drive.

If the CD-ROM is already set in the drive, take it out and put it into again.

The CD-ROM menu will appear automatically.

NOTE

If the CD-ROM menu does not appear automatically, select [Run] under the [Start] menu, enter "D:\English\CAP4MNU.exe", and click [OK]. (The CD-ROM drive name is indicated as "D:" in this manual. The CD-ROM drive name may differ depending on the computer being used.)

2 Click [Install a Printer Driver].

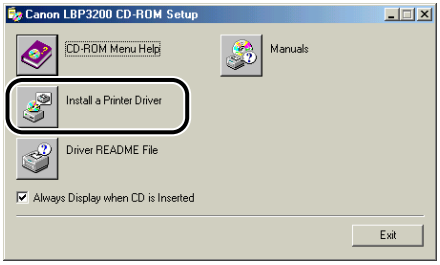

The dialog box for confirming the language will appear.

3 Confirm the language and click [OK].

After the preparation for installation is completed, the CAPT (Canon Advanced Printing Technology) software installer will start up.

The [Welcome] dialog box will appear.

4 Click [Next].

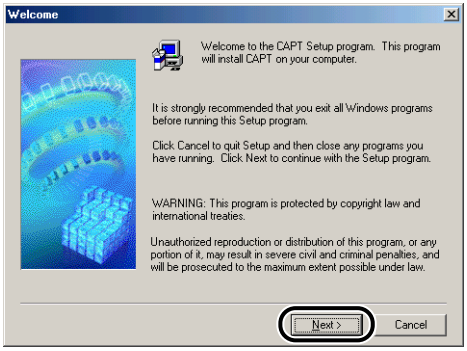

The [Software License Agreement] dialog box will appear.

5 Confirm the contents of the software license agreement, then click [Yes].

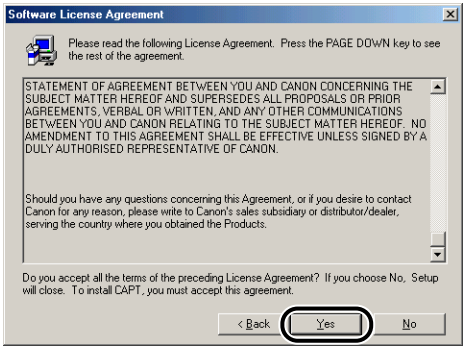

6 Select [Select from List], then click [Next].

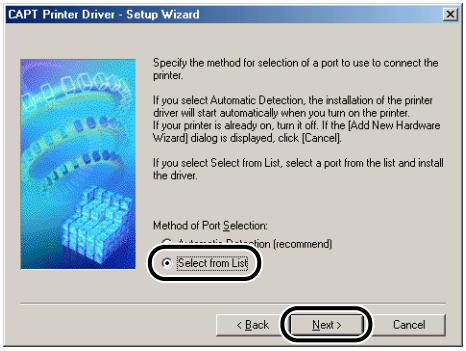

NOTE

If the USB class driver is not installed properly, [Select from List] is greyed out, disabling you to select it.

7 From [Port List], select a USB port that can be used with this printer, then click [Next].

For Windows 98, select "USBPRNXX" (XX: numbers).
For Windows Me, select "USBXXX" (XXX: numbers).

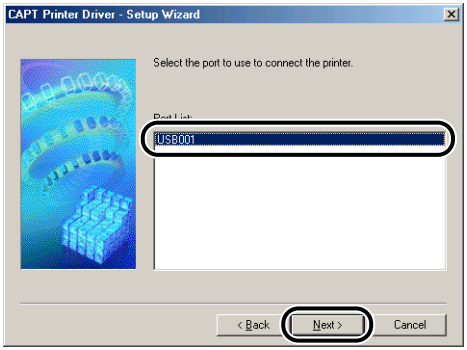

8 Click [OK].

9 After installation is completed, click [Finish].

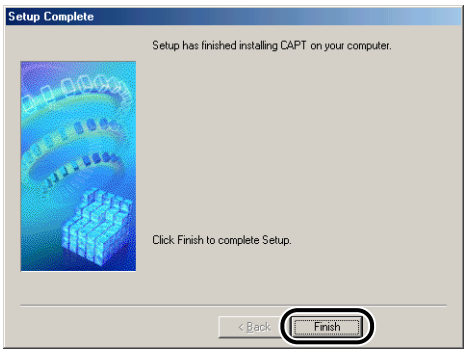

Problems During Network Installation

The name of the print server or shared printer is not listed in the [Shared printers] list box.

Cause 1	The print server has not been started.
Remedy	Start up the print server.
Cause 2	The printer is not specified as a shared printer.
Remedy	Specify the printer as a shared printer in the [Printer Properties] dialog box.
Cause 3	The user does not have permission to access the print server or printer.
Remedy	Ask your network administrator to change user's permission.

Miscellaneous Problems

LBP3200 does not function properly.

Cause 1 LBP3200 is not specified as the default printer.

Remedy Specify it as the default printer.

Cause 2 The CAPT software may not be installed properly.

Remedy In order to check if the CAPT software is installed properly, print from the application. If the print cannot be made properly, uninstall the CAPT software and install it again. (See "Uninstalling the CAPT Software," on p. 3-49, "Installing the CAPT Software," on p. 3-4.)

Cannot use Adobe Type Manger (ATM) fonts.

Cause 1 Adobe Type Manger (ATM) is not supported.

Remedy Use fonts that can be used with this printer.

The CD-ROM menu does not appear automatically.

Cause 1 [Always Display when CD is Inserted] in the CD-ROM menu is not selected.

Remedy Right-click the CD-ROM drive icon in [My Computer], select [Open] to display the CD-ROM menu manually. Select [Always Display when CD is Inserted].

Cause 2 [Auto Insert Notification] is not selected. (Windows98/Me only)

Remedy Display the properties for the CD-ROM drive from [Device Manager] and select [Auto Insert Notification] in the [Settings] sheet.

A "File not found on CD-ROM" error occurs when starting the CD-ROM menu.

Cause The program is being loaded from the hard disk.

Remedy Delete the "CAP4MNU.EXE" file from the hard disk and start the CD-ROM menu from the accompanying "User Software for LBP3200" CD-ROM.

<Specified Paper Incorrect> appears on the Printer Status Window.

Cause The setting in [Output Size] for a print job to be performed differs from the setting in [Output Size] for a print job that has been performed most recently.

Remedy Check if the size of paper that is loaded in the cassette is correct, then set the cassette into the printer again. (Printing will start automatically.) When printing on paper that is fed from the manual feed slot, confirm the size of paper set in the manual feed slot, then click [▶] on the Printer Status Window.

If you are using the printer sharing function on your computer, it takes a long time for the Printer Status Window to obtain the printer status.

Cause If you are using Windows XP Service Pack 2 or another operating system equipped with Windows Firewall as a print server, communication with the client computers is blocked by Windows Firewall.

Remedy Start the print server and clear the Windows Firewall block from communications with client computers. For details, refer to the file "note_ex.pdf" that is included in the [English] folder on the supplied "User Software for LBP3200" CD-ROM.

Appendix

7

CHAPTER

This chapter describes the printer specifications and index.

Specifications 7-2

Hardware Specifications 7-2

Software Specifications 7-3

Dimensions of Each Part 7-4

Optional Accessories 7-5

Network Adapter 7-5

NetSpot Device Installer 7-7

Index 7-8

Location of the Serial Number 7-11

Specifications

Hardware Specifications

Type		Desk-top Page Printer
Printing method		Electrophoto Method (On-demand fixing)
Print speed Plain paper (64 to 90 g/m^2)		When printing A4 continuously: 18 pages/min. * Print speed may drop in stages depending on the paper size, paper type, print copies, and the settings of the fixing mode. (This is because the safety function that prevents damage caused by heat becomes active.)
Warm-up time		0 second (Less than 8 seconds when the printer ON)
First print time		Face-down delivery: 10 seconds or less (20 °C (68 °F) A4 size) Face-up delivery: 9 seconds or less (20 °C (68 °F) A4 size) * A period of time from when the printer receives data.
Paper size	Cassette	A4, B5, A5, Letter, Executive, Envelope C5, Envelope COM10, Envelope DL, Envelope Monarch Paper capacity: approx. 250 sheets (64 g/m^2) * If "LGL" is indicated in the cassette, you can load the legal-size paper in the cassette. Whether "LGL" is indicated in the cassette or not depends on the area where you purchased this printer.
	Manual feed slot	A4, B5, A5, Legal, Letter, Executive, Envelope C5, Envelope COM10, Envelope DL, Envelope Monarch, Custom Paper (width: 76.2-215.9 mm, length: 127.0-355.6 mm) Paper capacity: 1 sheet
Output orientation		Face-down / Face-up
Output capacity		Face-down delivery area: Approx. 100 sheets (64 g/m^2) Face-up delivery slot: 1 sheet
Noise level (Bystander position) (Noise rating number based on ISO9296)		During standby: Background noise level During print: 55dB [A] or less

Operating environment (Printer unit only)		Operating environment temperature: 7.5 to 32.5 °C (45.5 to 90.5 °F) Humidity: 5 to 90 % RH (no condensation)
Storage environment (Printer unit only)		Storage environment temperature: 0 to 35 °C (32 to 95 °F) Humidity: 35 to 85 % RH (no condensation)
Host interface		USB interface * USB Full-Speed (USB1.1 equivalent)
Power supply		120 V 50/60 Hz (± 2 Hz) 220 - 240 V (±10%) 50/60 Hz (± 2 Hz)
Power consumption (at temperature of 20 °C or 68 °F)		120 V Average during operation: approx. 350W Average during standby: approx. 7W 220 - 240 V Average during operation: approx. 360W Average during standby: approx. 7W
Consumables	Toner cartridge	Toner cartridge*1 Printable pages: approx. 2500 pages*2 *1 Purchase a toner cartridge of the same product code when you need it. (See p. 5-2.) *2 For A4 or Letter
Weight		120 V model Printer unit ...approx. 6.5 kg (Excluding the toner cartridge) Cassette.....approx. 0.9 kg Toner cartridge.....approx. 0.7 kg 220-240 V model Printer unit ...approx. 6.1 kg (Excluding the toner cartridge) Cassette.....approx. 0.8 kg Toner cartridge.....approx. 0.7 kg

Software Specifications

Item	Specifications
Printing software	CAPT (Canon Advanced Printing Technology)
Printable area	Area excluding 5mm from the upper, lower, right and left of the paper sides.

Dimensions of Each Part

■ Printer

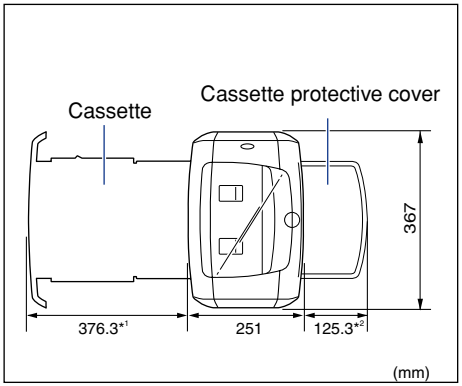

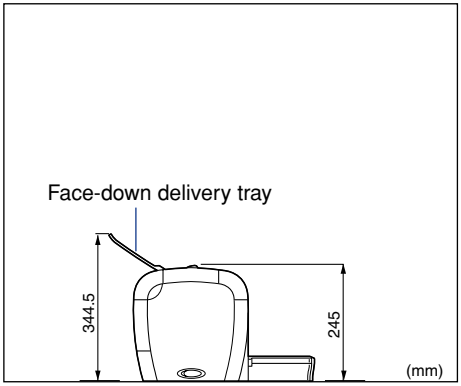

*1 If "LGL" is indicated in the cassette, this length is 436mm.

*2 If "LGL" is indicated in the cassette, this length is 185 mm.

Optional Accessories

By using an optional network adapter (AXIS1650), you can use the LBP3200 printer directly connected to a network.

For details on AXIS1650, access the web site of Axis Communications (http://www.axis.com/).

Network Adapter

The optional network adapter can be connected to the LBP3200 printer with a USB cable. The network adapter and the computer are connected in peer to peer. Also, you can connect the printer to the computer via a print server.

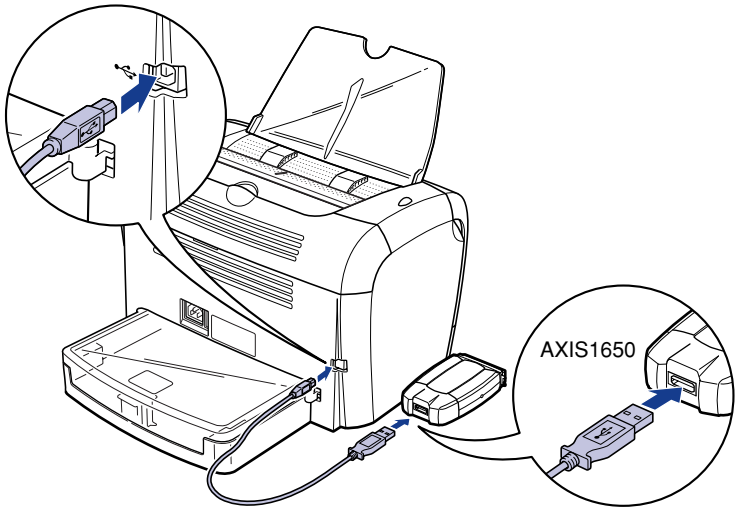

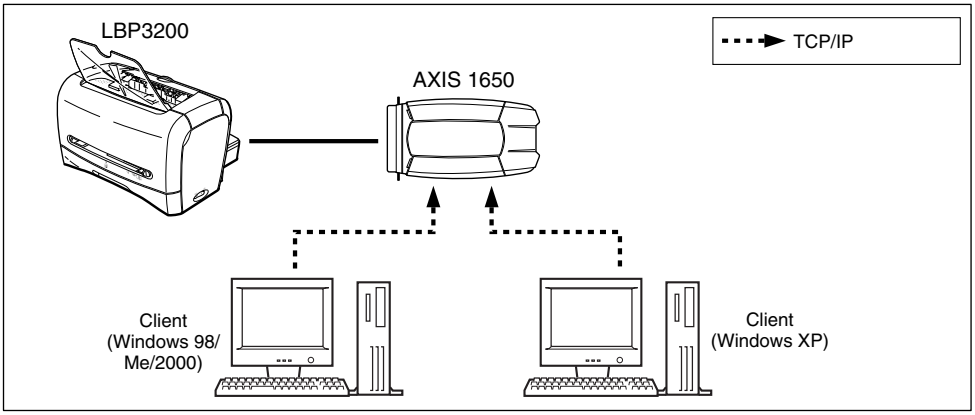

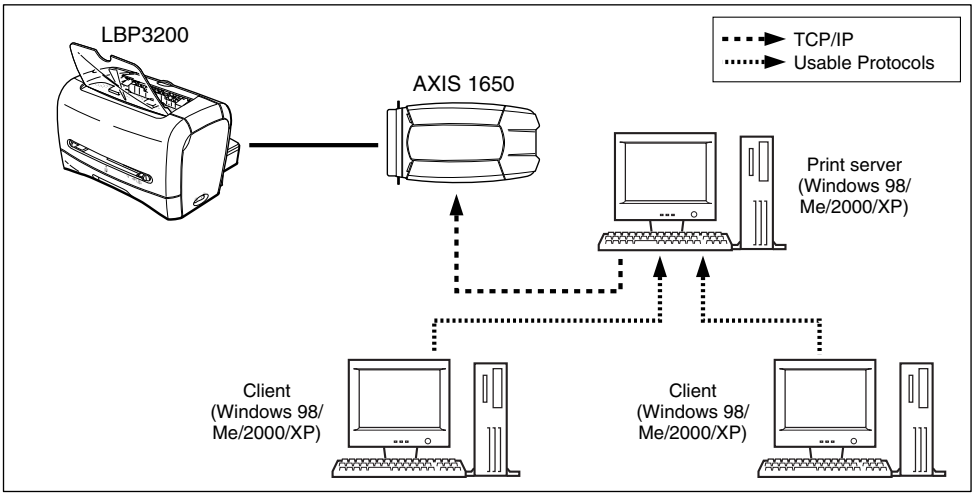

NOTE

- When using the network adapter, you can use "NetSpot Device Installer" that is utility software for specifying the initial settings of a printer connected to a network.
- For details on the network adapter, see the instruction manual supplied with the network adapter.
- For more details on the network adapter, contact your local authorized Canon dealer where you purchased LBP3200.

NetSpot Device Installer

The supplied CD-ROM includes "NetSpot Device Installer", which is a utility that initializes the settings of a printer connected to the network, as well as the printing software (CAPT). The NetSpot Device Installer does not need to be installed on your computer, but is simply used to initialize the network connection settings of the printer.

For detailed information on the NetSpot Device Installer, refer to the users manual included with the network adapter (AXIS 1650).

NOTE

Depending on the CD-ROM supplied, NetSpot Device Installer may not be included. If NetSpot Device Installer is not included on the supplied CD-ROM, you can download it from the Canon website.

Index

A

Add Printer Wizard, 3-45
[Advanced] Sheet, 4-31
AXIS1650, 7-5

B

Black Film, 1-7
Brightness, 4-21, 4-28

C

Canceling a Print Job, 4-6
Canon LBP3200 Group, 3-28
CAPT (Canon Advanced Printing Technology), 3-4
Cassette, 1-5, 2-15, 2-28
Cassette Protective Cover, 1-6
Cleaning
  Fixing Unit, 5-12
  Printer, 5-16
Client, 3-35, 3-45
Collate, 4-20, 4-27
Contrast, 4-21, 4-28
Copies, 4-18, 4-25
Custom Paper, 2-40, 4-36
Custom Paper Size, 4-19

D

Default Settings, 4-44
Delivery Selection Cover, 1-5
Details, 4-21, 4-29
[Details] Sheet, 4-22
Dimensions of Each Part, 7-4

E

Envelope, 2-5, 2-6, 2-27

F

Face-down Delivery Area, 1-5, 2-11, 2-13
Face-down Delivery Tray, 1-5
Face-up Delivery Slot, 1-6, 2-12, 2-13
[Finishing] Sheet, 4-20, 4-27
Fixing Unit, 6-4
Front Cover, 1-5

G

[General] Sheet, 4-22, 4-29

H

Halftones, 4-21, 4-28
Heavy Paper, 2-4, 2-6, 2-14

I

Image Refinement, 4-22, 4-29, 4-43
Important Safety Instructions, xv
Installation
  Installation for Windows 2000, 3-16
  Installation for Windows 98/Me, 3-4
  Installation for Windows XP, 3-22
Installation Problems, 6-22
Installing the CAPT Software, 3-4

L

Label, 2-4, 2-6, 2-14
Laser Beam, xviii
Loading Paper
  Loading Custom Paper, 2-40
  Loading Envelope, 2-27
  Loading Plain Paper / Heavy Paper / Label / Transparency, 2-14
Local Install, 3-36

M

Manual Feed Slot, 1-5, 2-9, 2-21, 2-35, 2-41
Manual Scaling, 4-19, 4-26
Miscellaneous Problems, 6-32

N

NetSpot Device Installer, 7-7
Network, 3-35
Network Adapter, 7-5
Network Printer, 3-46, 4-50

O

Online Help, 4-16, 4-24
Orientation, 4-18, 4-25
Output Size, 4-18, 4-25

P

Page Layout, 4-18, 4-26
Page Order, 4-19, 4-26
[Page Setup] Sheet, 4-17, 4-24
Page Size, 4-17, 4-24
Paper
  Paper Printable Area, 2-6
  Storing Paper, 2-8
Paper Capacity for Paper Delivery Area, 2-12
Paper Capacity for Paper Source, 2-10
Paper Delivery Area, 2-11
Paper Delivery Area Type, 2-11
Paper Feed Roller, 6-10
Paper Guide, 1-5, 2-16, 2-30, 2-33, 2-35, 2-41
Paper Jams, 6-3
[Paper Selection] Sheet, 4-32
Paper Size
  Abbreviation of Paper Size, 2-5
  Paper Size List, 2-2
  Setting Paper Size, 2-24, 2-38, 2-44
Paper Source, 2-9
Paper Source Type, 2-9
Paper Type, 4-19, 4-26
  Paper Type List, 2-3
  Setting Paper Type, 2-25, 2-44
Parts and Their Functions, 1-4
Plug and Play
  Windows 2000, 3-18
  Windows 98/Me, 3-8
  Windows XP, 3-24
[Ports] Sheet, 4-30
Power
  Power Cord, 1-8
  Power Indicator, 1-6, 1-12
  Power Socket, 1-6, 1-9
  Power Switch, 1-5
  Turning OFF Power, 1-12
  Turning ON Power, 1-11
Preferences, 4-20, 4-27
Pressure Release Lever, 6-7, 6-11
Print, 2-14, 2-27, 2-40, 4-2
Print Quality, 4-41
Print Quality Problems, 6-17
Print Server, 3-35, 3-36
Printer
  Cleaning, 5-16
  Moving the Printer, 5-18
  Printer Parts, 1-4
  Printer Problems, 6-1
Printer Driver
  Installation, 3-4
  Uninstallation, 3-49
Printer Port, 4-22, 4-30
Printer Properties, 4-9, 4-14

Printer Status Window, 4-46
Function, 4-47
Name, 4-46
Preferences, 4-48
Printing Preferences, 4-7
Printing Test Page, 3-32

Q

[Quality] Sheet, 4-21, 4-28, 4-41

R

Rating Label, 1-6
Resolution, 4-21, 4-28

S

Scaling, 4-19, 4-26, 4-33
[Security] Sheet, 4-31
Selecting the Paper Delivery Area, 2-13
Serial Number, 7-11
Service Error, 6-14
Sharing Settings, 3-39, 3-42
[Sharing] Sheet, 4-23, 4-30
Sound, 3-29, 4-46
Specifications, 7-2
System Requirements, 3-2

T

Test Page, 3-32
Toner Cartridge Guide, 1-7, 6-12
Toner Density, 4-22, 4-29, 4-42
Toner Save Mode, 4-22, 4-29
Transfer Roller, 6-5
Transparency, 2-4, 2-6, 2-14
Troubleshooting Map, 6-2

U

Uninstallation, 3-49
Unusable Paper, 2-7
Usable Paper, 2-2
USB
USB Cable, 1-14
USB Class Driver, 3-11, 3-17, 3-23, 6-22, 6-26
USB Connection, 1-13
USB Connector, 1-6, 1-14
USB Port, 1-13
USB Printing Support, 6-26

V

Ventilation Slot, 1-6

W

When Nothing is Printed, 6-21

Location of the Serial Number

A serial number consists of four-alphabetic characters and a six-digit number.

IMPORTANT

The label is required for a service engineer to check the serial number for service or maintenance. Be sure not to peel it off.

■ Back of the printer

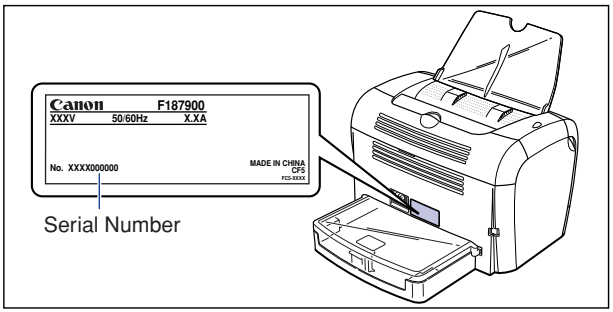

■ Packaging box (on the side)

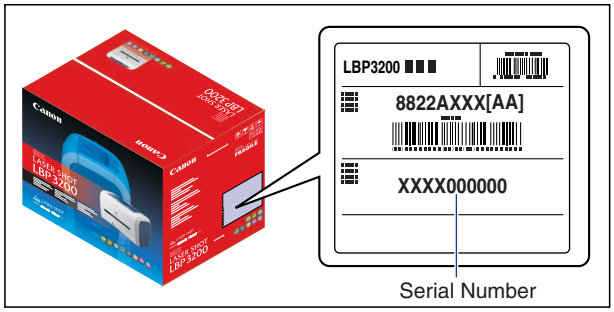

Canon

FA7-7426 (000)

©CANON INC. 2003

MADE IN JAPAN